KLING STUBBINS

ARCHITECTURE
ENGINEERING
INTERIORS
PLANNING

Division of Capital Asset Management & Maintenance (DCAMM)

Massachusetts State Laboratory

Boiler Replacement and Energy Conservation Measures

Final Feasibility Study

September 10, 2014

(Updated: December 5, 2014)

DCAMM Project # DPH1350E-ES1

KS Project # L1.0043.00

One Broadway
Cambridge, Massachusetts
02142

P 617.491.6450
F 617.491.7104

ECM Summary Matrix - Massachusetts State Lab

December 5, 2014

Commonwealth of Massachusetts
Division of Capital Asset Management and Maintenance (DCAMM)
Energy Upgrades - Massachusetts State Lab
Project Number DPH1350E EC1

Bldg	ECM Number	ECM Description	Summary of Proposed ECM	Estimated Cost ($)	Estimated Incentive ($)	Annual Savings ($/yr)	Simple Payback Period without incentives (years)	Comment
Tower, Stable	**4.00**	**Upgrade BAS**	Expand existing Tower BAS control system to accommodate new equipment from other ECM's. Update existing Tower BAS to latest system software version to be compatible with new equipment controls. Add Tower building roof top exhaust fans to BAS. Tie in Stable building BAS with Tower BAS and provide web connectivity for monitoring from DCAMM control center. Add new Stable building boilers to Tower BAS.	274,000		149,009	1.8	
Tower, Stable	**14.02**	**Replace Boilers**	Replace steam boilers with high efficiency, gas fired, hot water boilers for heat and provide new domestic hot water heaters. Tower building boilers to have dual fuel capability.	4,810,000	85,600	1,594,177	3.0	Cost estimate includes a nominal amount for asbestos abatement. Contractor to determine final scope and cost of asbestos abatement. Refer to BOD Section 12 for more information.
Tower	**16.00**	**CHP**	Provide new CHP system to provide electricity, and hot water for domestic and heating use.	1,062,000	66,210	103,394	10.3	Savings was calculated based on comparison with a baseline of gas fired hot water boilers to avoid double counting savings from ECM-14.02.
Tower	**17.02**	**Replace AHU's**	Replace approximately 12 AHU's in lower floors of Tower with new units sized for current loads. Replace associated return/exhaust fans as well.	4,062,000		9,970	407.4	
Tower	**17.08**	**Replace constant/variable volume terminal boxes**	Replace approximately 227 terminal boxes in upper floors of Tower.	3,642,000		90,044	40.4	
Tower	**23.00**	**Point of use steam generators**	Provide electric steam generators at each autoclave. Provide atomizing humidification system for existing roof top AHUs.	510,000		41,309	12.3	
Tower, Stable	**19.02**	**Gas meter**	Provide gas meter.					
	16.00 Option 1	**CHP Alternative for ECM 16.00**	Proposer may include a different size and/or type of combined heat and power unit as a substitute for ECM 16.00.					
	Alternate 1	**ECM 4.00 BAS Extended Maintenance Contract (Optional)**	Provide extended maintenance contract for a minimum of two (2) to five (5) years for BAS.					
	Alternate 2	**ECM 14.02 Boilers Extended Maintenance Contract (Optional)**	Provide extended maintenance contract for a minimum of two (2) to five (5) years for Boilers.					
	Alternate 3	**ECM 16.00 CHP Extended Maintenance Contract (Optional)**	Provide extended maintenance contract for a minimum of two (2) to five (5) years for CHP.					
Notes:			**TOTAL PROJECT**	$ 14,360,000.00	$ 151,810.00	$ 1,987,903.00	7.2	

Massachusetts State Laboratory –

Energy Upgrades

Final Feasibility Study

September 10, 2014

Contents

1 Executive Summary

2 Energy Conservation Measures

2.1 ECM-4: BAS Upgrades

2.2 ECM-14.2: Boiler Plant Upgrades with High Efficiency Condensing Boilers

2.3 ECM-16: Combined Heat & Power (CHP) System

2.4 ECM 17.02: AHU Replacements

2.5 ECM-17.8: VAV Replacements

2.6 ECM-23: Option 1: Point of use steam generation for autoclaves and humidifiers

2.7 ECM-23: Option 2: Dedicated steam boilers in Tower for autoclaves and humidifiers

3 Total Energy Savings of Project

4 Conclusions

Appendices

A – New Equipment Cutsheets for Recommended ECM's:

- ECM 14.2: Tower - Condensing Boilers for Heating
- ECM 14.2: Stable - Condensing Boilers for Heating
- ECM 14.2: Tower - Domestic Hot Water Heater
- ECM 14.2: Stable - Domestic Hot Water Heater
- ECM 16: CHP Unit
- ECM 23 Option 1: Electric Steam Generator

Key Plan

1 – Tower Building

2 – Biologics Building (not included in study)

3 – Stable Building

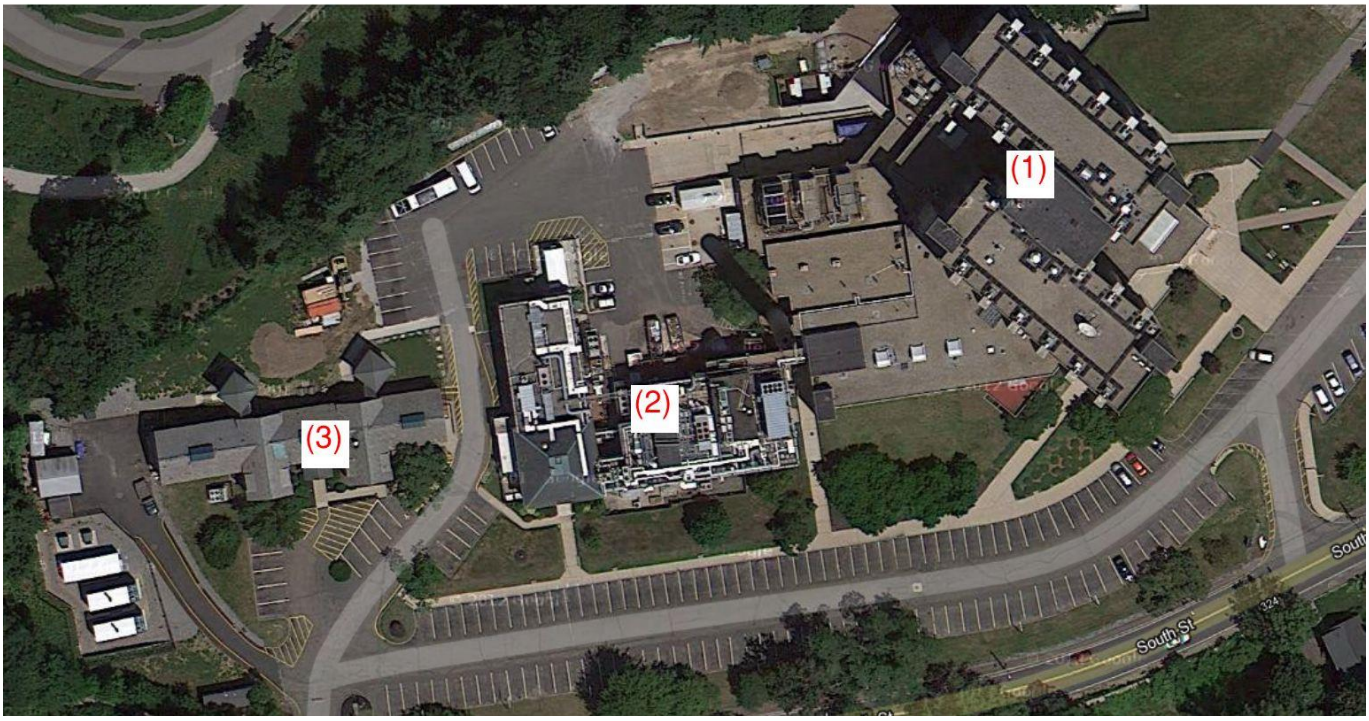

1 Executive Summary

1.1 Objectives

The objective of the feasibility studies is to determine the potential energy savings of each Energy Conservation Measure (ECM) as well as the estimated installation cost of each ECM and simple payback. Informed by the potential energy savings, installed cost and simple payback of each ECM, KlingStubbins is proposing the below analysis points for each proposed ECM. For the purposes of this study, only the Tower and Stables buildings are being reviewed. The Biologics building has been excluded due to the building not being used. It should be noted that unless otherwise mentioned, each ECM was studied independently, assuming no other things were being modified. Refer to the text and appendices of the report for analysis details.

- ECM-4: BAS Upgrades – Add equipment to existing BAS system and update controls (Tower).
- ECM-14.2: Replace existing steam boilers with high efficiency hot water boilers at each building (Tower and Stable).
- ECM-16: Combined Heat & Power (CHP) System – Add new CHP system to reduce electrical demand and provide domestic and heating hot water for Tower.
- ECM-17.02: Replace existing air handling units (AHU) serving lower floors of Tower building with new AHU's.
- ECM-17.8: Replace VAVs – Replace the remaining (227) original pneumatic VAV terminal boxes in the Tower building.
- ECM-23: Option1 – Point of use steam generation for autoclaves and humidifiers
- ECM-23: Option 2 – Dedicated steam boilers for autoclaves and humidifiers
- Confirm the total energy savings, energy cost savings, and simple payback of the recommended options.
- Investigate if the natural gas line serving the facility will need to be upgraded in order to accommodate any of the ECMs that need natural gas.

1.2 Recommendations

As a result of the above analysis, KlingStubbins recommends the implementation of the following ECMs:

ECM-4: BAS – Upgrade the remaining pneumatic controls to be compatible with the newer DDC

system.

ECM-14.2: Boiler Plant Upgrades – Replace existing boiler plant with high efficiency hot water boilers.

ECM-16: CHP – Add a CHP system to provide hot water for domestic use and heating.

ECM-17.02: AHU Replacements – Replace (12) lower floor AHU's that are original to the building.

ECM-17.8: VAV Replacements – Replace existing 227 VAV terminal boxes with new VAV terminal boxes controlled by the BAS.

ECM-23-Option 1: Point of use steam generators – Provide electric steam generators at all autoclaves and at air handling units, for humidification.

The combined cost of the recommended design options above is approximately $10.4 million with a simple payback of about 4 years. Below is a summary table for the individual ECMs. Potential incentives/rebates from the utility are not included in the payback calculations.

Information about utility incentives is provided for each ECM. Prescriptive applications are ones where the available incentive is based on set guidelines/equipment sizes, set by the utility. Custom applications are ones where the incentives are based on energy savings and more information, such as calculations will need to be provided to the utility.

Table 1.2.1 - Energy Savings Summary			
ECM	**Installed Cost ($)**	**Annual Savings ($/year)**	**Simple Payback (Years)**
4: BAS Upgrades*	$624,000*	$308,800*	2*
14.2: Boiler Replacements (Hot water + Steam boilers)	$6,202,000	$1,584,000	4
14.2: Boiler Replacements (Hot water boilers only)*	$5,371,000*	$1,615,600*	3.3*
16: CHP (Domestic hot water, with existing boilers)	$210,000	$55,300	4
16: CHP (Domestic+Heating hot water, with existing boilers)	$342,000	$134,100	3
16: CHP (Domestic hot water, with new gas boilers)	$210,000	$19,200	11
16: CHP (Domestic+Heating hot water, with new gas boilers)*	$342,000*	$46,550*	7*
17.02: AHU Replacements*	$873,000*	$7,750*	113*
17.8: VAV Replacements*	$2,594,000*	$525,150*	5*
23: Option 1-Point of use steam*	$589,000*	$41,300*	14.3*
23: Option 2-Steam boilers	$532,000	$110,600	5
Total (Recommended ECM's)	$10,393,000	$2,545,000	4

Note 1: Installed costs include construction, design, contingency, and escalation.
Note 2: Numbers may not add up perfectly due to rounding.
Note 3: Cost estimates are approximate.
Note 4: Labor costs for operators/maintenance staff and utility incentives are not included.
**: Recommended ECM*

2 Energy Conservation Measures

The Tower and Stable buildings were modeled in the Trane Trace 700 software to establish a baseline for comparison purposes for several ECMs in this study. Massachusetts State Lab (MSL) facility management provided KlingStubbins with electrical usage data, steam flow data, and fuel usage data for multiple months.

The utility rates used in this study:

- Natural Gas: $1.00 / therm
- Fuel Oil: $3.20 / gallon
- Water: $13.70 / 1000 gallons
- Electricity: $0.15 / kWHr

For most ECMs, the demand and distribution charges were aggregated to a simple consumption rate of $0.15 / kWHr.

All ECM's were compared to a baseline case. The baseline case represents the operation of existing systems and is described in further detail in each ECM section.

2.1 ECM-4 BAS Upgrades

2.1.1 Background

The air handling units (AHU's) serving the upper floors (level 2-8) were replaced in 2010 and are completely controlled by a DDC system. The AHU's serving the basement through level 2 have been partially converted from the original pneumatic controls to a new DDC system. The DDC system upgrades on the lower floor AHU's include points for freeze protection monitoring and heating control valves, along with some additional control points for future upgrades. This ECM includes a complete upgrade of all the lower floor AHU controls with complete DDC controls (for complete control of dampers and valves), along with tying them into existing BAS and providing a new front end system. In addition to the expected energy savings due to proper control of the units, the units will be able to be controlled remotely and occupant comfort should improve.

2.1.2 Assumptions

Without doing a detailed analysis of the operation of the existing AHUs, it is difficult to estimate the potential cost savings associated with this measure. Several studies have been conducted by ASHRAE and other organizations, and the industry accepted savings for a BAS replacement project is somewhere between 10% - 30% annually. Due to the high energy intensity nature of a lab building and the advanced age of the existing system, we decided to use a conservative 10%.

There are 12 air handing units and we assumed 15 points per AHU, along with new dampers, new actuators, valves and new front end system.

2.1.3 Results

Table 2.1.3.1				
ECM-4: BAS Upgrades				
	Energy ($/yr)	Savings over Baseline ($/yr)	Cost ($)	Simple Payback (Years)
Existing	$3,088,300			
Upgrade	$2,779,460	$308,800	$624,000	2

2.1.4 Utility Incentives

Incentives for controls would be provided with installing new equipment. Refer to other ECM's.

2.2 ECM-14.2 Boiler Plant Upgrades with High Efficiency Condensing Boilers

2.2.1 Background

The scope for this ECM is based on Option C in the RDK / KlingStubbins "Boiler Replacement Study" dated October 11, 2012, excluding any upgrades for the Biologics building.

The three (3) existing high-pressure steam boilers as well as associated piping, boiler feed pumps, heat exchangers, fuel oil pumps and miscellaneous parts and equipment within the power plant will be removed and replaced with five (5) high efficiency hot water condensing boilers with a capacity of 6,000 MBH each, along with new pumps and accessories, to provide heating hot water for the Tower building. The new equipment will be located in the Power Plant. The new boilers will be capable of running on natural gas and number 2 fuel oil. Fuel oil will only be used as a backup.

Two (2) 120 BHP high-pressure steam boilers will also be installed to cover the steam demands required for process steam and humidification. (Steam boilers will be excluded if ECM-23 Option 1 is selected, which includes installing point of use steam generators.)

All existing steam piping and hot water piping within the Power Plant shall be replaced with new piping

and the new equipment will connect to existing hot water distribution system.

Two (2) high efficiency hot water condensing boilers, each with 500MBH capacity, will be installed in the Stable building to provide heat.

Domestic hot water will be provided by dedicated gas fired high efficiency condensing type hot water boilers for the Tower building. Three (3) 1,500 MBH condensing type hot water heaters will be provided, all headed together for redundancy.

The Stable building electric water heater will be replaced with a high efficiency gas fired water heater with a capacity of 50 gallons, to provide domestic hot water.

2.2.2 Assumptions

All existing piping is insulated with asbestos containing material that requires proper mitigation prior to removal. Fuel oil rate assumed to be $3.2/gal, based on fuel oil cost data provided by MSL.

2.2.3 Results

Table 2.2.3.1				
ECM-14.2: Boiler Replacements: Hot water + Steam boilers				
	Heating Energy ($/yr)	Savings over Baseline ($/yr)	Cost ($)	Simple Payback (Years)
Existing	$2,241,700			
Upgrade	$657,700	$1,584,000	$6,202,000	4

If ECM-23-Option 1 (Point of use steam generators) is selected along with ECM-14.2, then ECM-14.2 will exclude adding steam boilers in the power plant. Therefore, the costs, savings and payback period will be as listed in Table 2.2.3.2 below.

Table 2.2.3.2				
ECM-14.2: Boiler Replacements: Hot water boilers only				
	Heating Energy ($/yr)	Savings over Baseline ($/yr)	Cost ($)	Simple Payback (Years)
Existing	$2,241,700			
Upgrade	$626,100	$1,615,600	$5,371,000	3.3

2.2.4 Utility Incentives

Available incentives for boilers:

Tower heating water boilers: Approximately $10,000 per boiler.

Tower domestic water heaters: Approximately $500 per boiler.

Stable heating water boilers: Approximately $4,000 per boiler.

Stable domestic water heaters: Approximately $100.

2.3 ECM-16 Combined Heat & Power (CHP) System

2.3.1 Background

From the Massachusetts Combined Heat and Power Guidebook:

Combined Heat and Power is the simultaneous generation of electric and thermal energy from a single fuel source such as natural gas. As an example, a natural gas fired engine when coupled with a generator produces electric energy. The engine produces waste heat via hot exhaust gas as well as heat rejected through the radiator to keep the engine and the lubricant at the optimal temperature. This normally wasted heat can be captured to produce steam or hot water for space heating, domestic hot water, or manufacturing processes. The steam or hot water produced by the CHP unit will lower the fuel otherwise used in the facility boiler for domestic hot water, space heating etc. The overall efficiency of a CHP system can be 80-85% which exceeds the combined efficiency of power generation, transmission and distribution system of a central power plant of an electric utility (typically 35 to 40% electric efficiency) along with on-site production of thermal energy in a boiler.

The increased efficiency of CHP also leads to a lower carbon foot-print because of reduced greenhouse gas emissions such as CO2 and other greenhouse gas production.

Other significant benefits of the CHP system may include standby power capability at the facility, and better control of power factor depending on type of generator deployed by the CHP system.

A simulation model was developed based on electricity demand, domestic hot water demand, heating hot water demand and energy rates. The model calculates the electrical and hot water demand for each hour of the year (8,760 hours). Analysis was performed to maximize system usage and efficiency. Two scenarios were analyzed for the Tower building, one with the domestic hot water as the driving factor, and a second with heating hot water and domestic hot water, both as driving factors. These driving factors are used to determine when the CHP system will operate.

For each hour, the following was determined:

- Is there sufficient hot water demand to operate the CHP and generate electricity?
- Does the CHP operate at partial or full-load?
- What is the incremental fuel increase to the facility?
- What is the electrical demand reduction?
- What is the net operating cost?

After each of these factors is determined hourly, the yearly totals are used to determine the following:

- Net electrical reduction during any period, such as peak, off-peak or seasonal super-peaks.
- Net operating cost
- Overall CHP operating efficiency
- Simple Payback

The CHP unit used as a basis for analysis is by Aegis. The recommended maintenance for the unit includes monthly oil changes, an engine replacement every three (3) to five (5) years and a generator replacement every six (6) to seven (7) years. Routine maintenance shall be performed by a manufacturer certified technician. The maintenance plan costs about $1.40 per run hour and covers routine or unscheduled maintenance.

2.3.2 Assumptions

Electricity demand was taken from meter information provided by the State Lab facilities and hourly electric demand information from NStar.

Domestic hot water demand was estimated based on conversations with the State Lab staff, quantity of plumbing fixtures, building operating schedule and space types. 120 gallons per hour was the estimated peak hot water requirement for the cafeteria and 600 gallons per hour was the estimated peak hot water requirement for the rest of the Tower building.

Heating hot water demand was estimated based on space types, air handling unit capacities and building operating schedule.

2.3.3 Results

The CHP unit is a natural gas-fired reciprocating engine driven generator that is capable of producing 75 kW when operating at full capacity. The selected CHP unit is capable of modulating capacity down to 60% of its full capacity. Electrical and thermal output and fuel input are approximately linear during

partial unloading. Should the hot water demand drop below 60% of the CHP's capacity, the CHP will not operate.

Option 1: Domestic Hot Water for Tower Building

In order to fully meet the domestic hot water load, the unit will need to run for approximately 8 hours per day, during which electricity will also be produced. For the times when the CHP unit is not running, electricity will need to be purchased from the utility. It is recommended that storage tanks be used to store the hot water, so as to maximize system efficiency.

Option 2: Domestic Hot Water and Heating Hot Water for Tower Building

If the CHP unit were to provide heating hot water as well as domestic hot water, the unit would have to run continuously during winter, to provide heating hot water and domestic hot water, and for approximately 8 hours per day during summer, to provide domestic hot water. During winter, the CHP would need to run in addition to the boilers to produce sufficient hot water for heating and domestic hot water.

Assuming the existing oil fired boilers are to remain:

Table 2.3.3.1			
ECM-16 CHP: Existing Oil Boilers			
	Savings over Baseline ($/yr)	Cost ($)	Simple Payback (Years)
Option 1: Domestic Hot Water	$55,300	$210,000	4
Option 2: Domestic + Heating Hot Water	$134,100	$342,000	3

Assuming the existing oil fired boilers are replaced with gas fired boilers:

Table 2.3.3.2			
ECM-16 CHP: New Gas Boilers			
	Savings over Baseline ($/yr)	Cost ($)	Simple Payback (Years)
Option 1: Domestic Hot Water	$19,200	$210,000	11
Option 2: Domestic + Heating Hot Water	$46,550	$342,000	7

2.3.4 Utility Incentives

Available incentives for CHP systems are approximately $750 per kilowatt.

2.4 ECM-17.02 Lower Floors AHU Replacements

2.4.1 Background

The AHU's serving the lower floors of the Tower building were installed when the building was constructed and are past their intended life. There are 12 AHU's which serve different zones in the basement, level 1 and level 2. A portion of level 2 is served by the roof top units (not being replaced). The lower floor AHU's have coils that are leaking, dampers that are not functioning and various other problems which would be solved by replacing them with new ones. A review of AHU capacities and space loads will be done to determine the sizing for the new AHU's. Installing new AHU's which are more appropriately sized for the spaces being served, along with new controls, motors and variable frequency drives will allow for more controllability, reduced energy consumption/wastage and improved occupant comfort.

2.4.2 Assumptions

Many of the AHU's are located in tight confines within mechanical rooms and so will require special considerations for their installation.

2.4.3 Results

Table 2.4.3.1

ECM-17.02 AHU Replacement

	Energy ($/yr)	Savings over Baseline ($/yr)	Cost ($)	Simple Payback (Years)
Existing	$3,088,300			
Upgrade	$3,080,550	$7,750	$873,000	113

2.4.4 Utility Incentives

Available incentives for AHU replacements are approximately $30-$50 per ton for AHU's with low EER's. AHU's with higher EER's can potentially get about $50-$80 per ton. For replacing the 12 AHU's incentives could add up to approximately $7,000 to $10,500. Incentives for new controls range from about $150 to $250 per unit, depending on type. Incentives for air handling units are typically paid out to the air handler manufacturer, who in turn would pass on the savings to the customer.

2.5 ECM-17.8 VAV Replacements

2.5.1 Background

The existing building control system is pneumatic, outdated and in many cases non-functional. Some of the supply air terminal boxes (VAVs) have been replaced, but there are still approximately 227 original VAV boxes in the building. Energy cost savings will come from having control over many zones where there is currently little or no control. Boxes that are fully open when there is diminished demand are a large waste of energy. Although it's difficult to quantify, the building's occupant comfort and safety would be increased dramatically with a restored control system.

2.5.2 Assumptions

No formal survey of the existing VAVs was conducted. From discussions with site personnel, it can be assumed that most of the VAVs are stuck open in some position and many VAVs have had their internal dampers removed. For the purposes of this study, we assumed all the boxes were fully open.

2.5.3 Results

Table 2.5.3.1

ECM-17.8: VAV Replacements

	Fan Energy ($/yr)	Cooling Energy ($/yr)	Heating Energy ($/yr)	Savings over Baseline ($/yr)	Installed Cost ($)	Simple Payback (Years)
Existing	$41,300	$1,759,600	$430,000			
Upgrade	$23,870	$1,501,540	$180,340	$525,150	$2,594,000	5

2.5.4 Utility Incentives

No incentives are available for VAV terminal replacements.

2.6 ECM-23 Point of use steam generators for autoclaves and humidifiers

Option 1

2.6.1 Background

The existing steam boilers will be replaced with point of use steam generators at each autoclave and at each AHU for humidification. The baseline case represents producing steam from the central oil fired steam boilers serving the entire campus.

Based on Massachusetts legislature Chapter 146, the individual steam generators will be less than 9

horsepower, so a boiler plant engineer will not be required on site. The rules governing the requirement for a boiler plant engineer was confirmed with a steam generator manufacturer. KS has also clarified this with other experienced design engineers. More investigation will be done regarding this issue to confirm the requirements.

2.6.2 Assumptions

The calculations were based on replacing the steam boilers with 9 electric steam generators serving the autoclaves and 8 electric steam generators serving the air handling unit humidifiers.

2.6.3 Results

Table 2.6.3.1				
ECM-23: Option 1 – Point of use steam				
	Annual Operating Cost ($/yr)	Savings over Baseline ($/yr)	Installed Cost ($)	Simple Payback (yrs)
Existing	$152,100			
Upgrade	$110,790	$41,300	$589,000	14.3

2.6.4 Utility Incentives

The point of use steam generators would be eligible for incentives based on the new system's energy savings as compared to the old system. Average payouts are approximately $1.25 per therm and $0.20 per kilowatt-hour of energy saved.

2.7 ECM-23 Option 2 Dedicated steam boiler for autoclaves and humidifiers

2.7.1 Background

The existing steam boilers will be replaced with a smaller steam boiler, dedicated to serving the autoclaves and providing humidification at the AHU's.

2.7.2 Assumptions

The calculations were based on replacing the existing oil fired steam boilers with a smaller gas fired steam boiler sized according to the requirements of the autoclaves and humidifiers at the air handling units.

2.7.3 Results

Table 2.7.3.1				
ECM-23: Option 2 – Dedicated steam boiler				
	Annual Operating Cost ($/yr)	Savings over Baseline ($/yr)	Installed Cost ($)	Simple Payback (yrs)
Existing	$152,100			
Upgrade	$41,470	$110,600	$532,000	5

2.7.4 Utility Incentives

Refer to ECM 14.2.

2.8 Natural Gas Line Upgrades

A natural gas line was recently upgraded by National Grid, and brought up to the property line of the Massachusetts State Lab campus. The gas line is a 6 inch pipe, with low pressure natural gas. In order to accommodate ECM's 14.2 (Boiler Replacements) and 16 (CHP), the gas line will need to be upgraded to provide intermediate pressure natural gas. A gas load letter listing the new equipment requiring gas and each of their gas loads will need to be provided to National Grid, in order to upgrade the existing line and extend it from the property line to the Tower and Stable buildings.

3 Total Energy Savings of Project

The combined scope of work for all recommended options would include the following :

ECMs 4 (BAS Upgrades), 14.2 (Boiler Plant Upgrades with High Efficiency Condensing Boilers), 16 (CHP for Domestic and Heating hot water), 17.02 (AHU Replacements), 17.8 (VAV Replacements) and 23-Option 1 (Point of use steam generation).

ECM 23-Option 1 was recommended instead of ECM 23-Option 2 based on a preference by DCAMM and MSL facility management to get rid of the centralized steam boiler system in the Power Plant. By going with ECM 23-Option 1, a central steam boiler will not be required. Instead, small electric steam generators will be used at various locations in the Tower building.

Estimated potential savings of the recommended ECMs:

1. Combined annual savings: $2,545,000
2. Cost of enhancement: $10,393,000
3. Simple Payback: 4 years

4 Conclusions

KlingStubbins recommends the implementation of the energy cost measures listed in section 3 above (Total Energy Savings).

KLING STUBBINS

Appendix A
New Equipment Cutsheets for Recommended ECM's

- ECM 14.2: Tower - Condensing Boilers for Heating
- ECM 14.2: Stable - Condensing Boilers for Heating
- ECM 14.2: Tower - Domestic Hot Water Heater
- ECM 14.2: Stable - Domestic Hot Water Heater
- ECM 16: CHP Unit
- ECM 23 Option 1: Electric Steam Generator

ECM 14.2
TOWER: CONDENSING BOILERS FOR HEATING

Fulton®

VANTAGE™

Condensing Hydronic Boilers

2,000,000 - 6,000,000 BTU/HR

The heat transfer innovators.

VANTAGE
CONDENSING HYDRONIC BOILERS

FEATURES

- High Mass and Water Volume
- Ultra High Efficiencies
- Duplex Stainless Steel Heat Exchanger
- Linkageless Modulation
- Dual Fuel with #2 Oil
- Low Emissions: <9ppm NOx

DURABLE AND RELIABLE CONSTRUCTION

- The Vantage Hydronic Condensing Boiler product line includes an extensive offering of models ranging in size from 2,000,000 BTU/HR input to 6,000,000 BTU/HR input.
- The fire tube heat exchanger design features diverse power burner configurations for ultra-high efficiency hydronic heating applications.
- Vantage boilers feature HIGH PRODUCT MASS and HIGH PRESSURE VESSEL WATER VOLUME; making the boilers exceptionally tolerant of varying and sometimes unpredictable system conditions.
- Duplex alloy stainless steel is used in the condensing heat exchanger. Duplex alloys have superior properties suited for condensing applications and significantly increase heat exchanger life.

MODELS

Natural Gas Burner:

- VTG - 2000
- VTG - 3000
- VTG - 4000
- VTG - 5000
- VTG - 6000

Dual Fuel Natural Gas #2 Oil:

- VTG - 2000 DF
- VTG - 3000 DF
- VTG - 4000 DF
- VTG - 5000 DF
- VTG - 6000 DF

Low Emissions <9ppm NOx:

- VTG - 3000 LE
- VTG - 4000 LE

A LOOK INSIDE

THE COMBUSTION PROCESS

1 The burner fires down the primary combustion chamber, creating the first pass. **2** The flue gases then pass through Schedule 40 steel pipes, creating the second pass. **3** The third and final pass occurs as the flue gases travel through duplex alloy pipes before **4** exiting through the exhaust outlet.

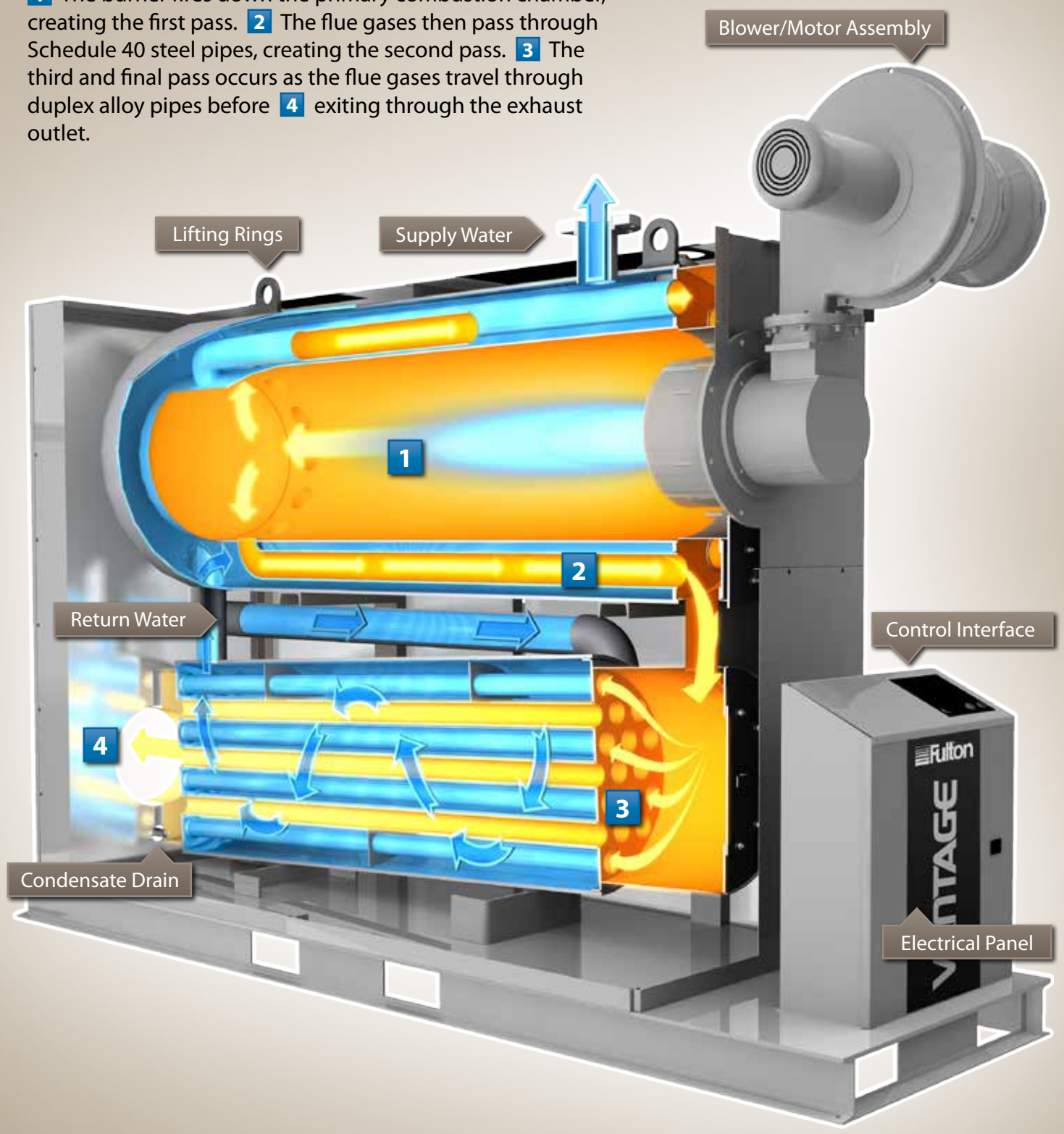

SUPERIOR DESIGN PRINCIPLES

MATERIALS

Fulton has been designing and manufacturing boilers for over 60 years. Construction parameters typically include material thicknesses 30% greater than ASME minimum requirements.

Conservative designs allow Fulton to offer a **lifetime thermal shock warranty** on all of our Vantage products.

ENGINEERING

Intelligent designs maximize boiler pressure vessel integrity and increase life expectancy. By choosing Duplex stainless steel alloys over the 300 series stainless steels, Fulton provides the advantage of increased **MATERIAL STRENGTH, RESISTANCE TO CORROSION, and HEAT TRANSFER CAPABILITIES** along with a decreased **COEFFICIENT OF THERMAL EXPANSION**. The graphic below represents thermal stress on a tubesheet based on material selection.

Left: Vantage tubesheet constructed of duplex alloys as used in all Vantage boilers. Blue, green and yellow indicate low stress.

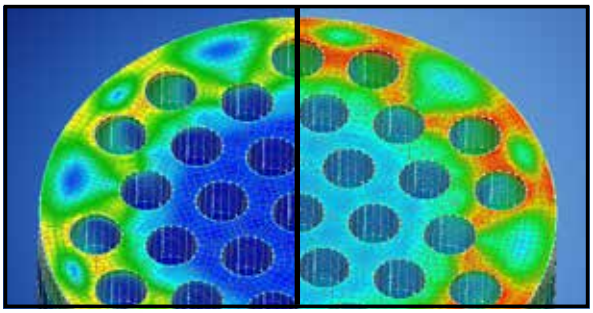

Right: Same tubesheet design simulated with 316L stainless steel. Red and orange indicates increased material stress and decreased product longevity.

CRAFTSMANSHIP

Vantage boilers are built by skilled craftsmen. The impressive workmanship that goes into constructing the pressure vessels is performed by Fulton's ASME certified welders, who average over 20 years of experience.

STRONGER MATERIALS + SMARTER ENGINEERING + SUPERIOR CRAFTSMANSHIP = FULTON

EFFICIENCY & CONTROLS

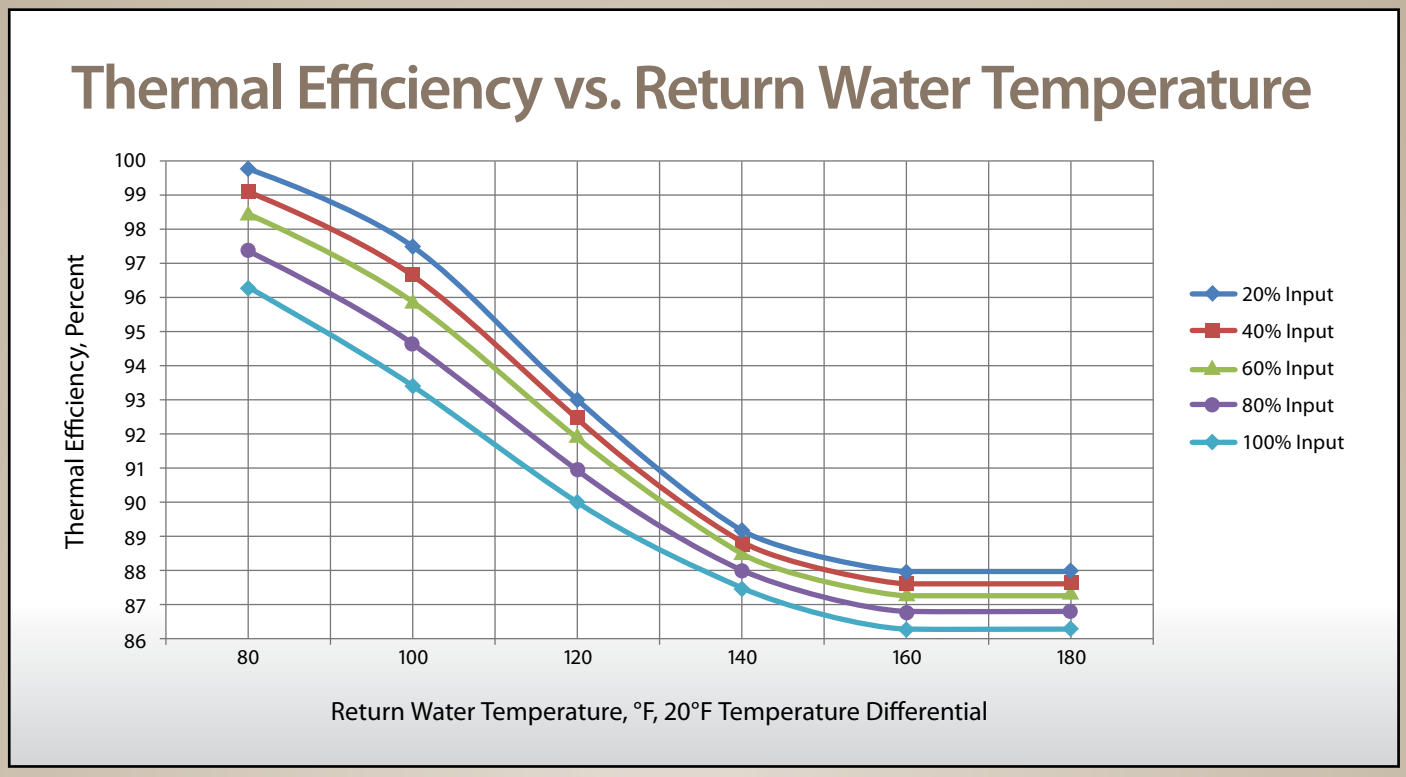

AHRI Directory Listed Models	Thermal Efficiency, 100% Input • (High Fire) 100°F Temperature Differential • (80°F to 180°F)
VTG-2000, VTG-2000DF	95.7%
VTG-3000, VTG-3000DF, VTG-3000LE	96.3%
VTG-4000, VTG-4000DF, VTG-4000LE	96.9%
VTG-5000	92.6%
VTG-6000, VTG-6000DF	94.0%

CONTROLS

The Vantage boiler has been designed with a linkageless modulation control system. Air and gas servo motors are independently operated using a multiple point load profile. This configuration provides precise temperature control along with consistent and reliable boiler operation throughout varying environmental conditions and turndown ranges.

BACnet, LonWorks and Modbus communication options allow for integration with both ModSync and Building Management control strategies.

DUAL FUEL AND LOW EMISSIONS OPTIONS

DUAL FUEL OPTIONS

- **Natural Gas / Propane**
- **Natural Gas / #2 Oil**
- **Propane / #2 Oil**
- **Natural Gas / Propane / #2 Oil** (Tri-Fuel)
- **Configurations available for alternative fuels like B100 Bio-diesel and Digester Gases**

The Vantage boiler is a fully condensing boiler with #2 oil available as a backup fuel. Benefits of these fuel options include:

- Customers may qualify for lower natural gas rates with the ability to operate on a second fuel.
- A reliable backup fuel source can be critical to maintaining operations.
- Automatic fuel changeover capabilities.
- Thermal efficiency up to 91% when firing on #2 fuel oil.

#2 FUEL OIL

Can be stored indoors and many buildings already have infrastructure to utilize oil from previous boiler installations.

PROPANE

Tanks must be installed outdoors with clearance requirements to surrounding buildings.

LOW EMISSIONS OPTIONS

- **Natural Gas / Propane**
- **<9ppm NOx**

The Vantage Low Emissions models can be configured to meet emissions requirements down to <9ppm NOx. This performance is achieved throughout the full modulation range, at full input firing capacity, and during all ambient (outdoor air temperature) conditions. Sealed combustion or mechanical room combustion air supply can be used.

Engineering Highlights:

- Fiber mesh burner technology.
- Premium control technology allows the boiler to not only monitor the conditions in the hydronic heating system, but also maintains settings to ensure emissions stay within acceptable operating ranges.
- Variable speed blower motor minimizes electrical consumption while maximizing operating efficiency.

SPECIFICATIONS AND DIMENSIONS

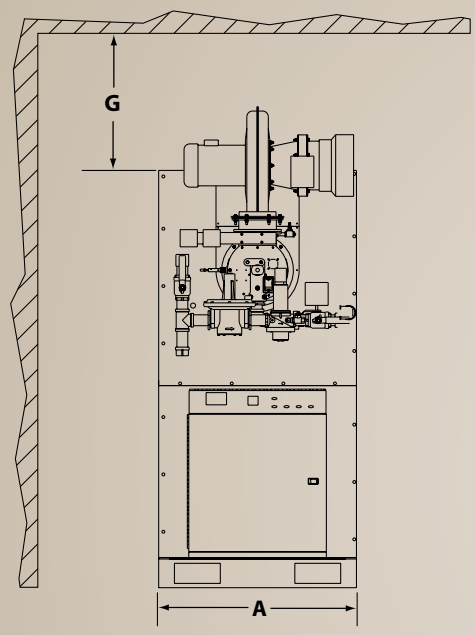

Front View

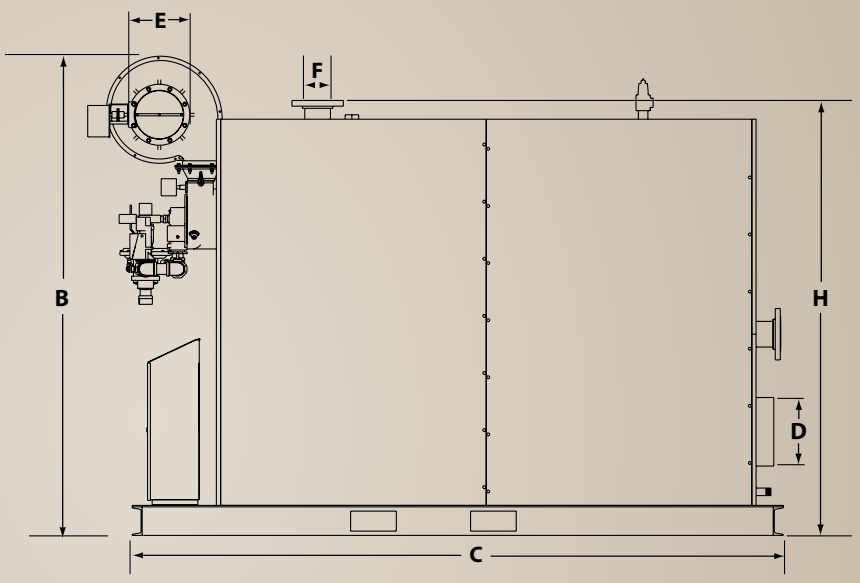

Right Side View

MODEL VTG-		2000	2000DF	3000	3000DF	4000	4000DF	5000	5000DF	6000	6000DF
Specifications				3000LE		4000LE					
Input	Million BTU/Hr.	2	2	3	3	4	4	5	5	6	6
Fuel Cons. @ rated cap: (Nat. Gas)	FT3/Hr.	2,000	2,000	3,000	3,000	4,000	4,000	5,000	5,000	6,000	6,000
Fuel Cons. @ rated cap.: (#2 Oil)	GPH	NA	14.3	NA	21.4	NA	28.6	NA	35.8	NA	42.8
Output at AHRI Test Condition	BHP	57	57	86	86	116	116	138	138	168	168
Electrical Req. (Amps)	230V, 60Hz, 3 Phase	6.8	13.4	12.9	16.1	18.5	16.1	23	29.2	23	29.2
	460V, 60Hz, 3 Phase	3.4	6.7	6.5	8.1	9.3	8.1	11	16.6	11	16.6
Water Content	Gal	147	147	215	215	275	275	275	275	480	480
Dry Weight	LB	3,800	3,800	5,200	5,200	5,800	5,800	5,800	5,800	10,800	10,800
Operating Weight	LB	5,100	5,100	7,000	7,000	8,100	8,100	8,100	8,100	14,800	14,800
Dimensions											
A. Boiler Width	IN	30.5	30.5	34.5	34.5	40.5	40.5	40.5	40.5	50.5	50.5
B. Overall Boiler Height	IN	75.6	64	90.4	72.3	92	77.9	98.7	79.5	88.2	88.2
C. Overall Boiler Depth	IN	108	122	120	132	124	136	136	136	155	155
D. Flue Outlet Diameter	IN	10	10	12	12	14	14	14	14	14	14
E. Air Inlet Diameter	IN	8	10	10	10	12	12	12	12	12	12
F. Water Inlet/Outlet Diameter	IN	4	4	4	4	6	6	6	6	6	6
G. Min. Clearance to Ceiling	IN	24	24	24	24	24	24	24	24	24	24
H. Overall Height (w/o blower)	IN	60.9	68.1	72.3	72.3	77.9	77.9	77.9	79.	88.2	88.2

* Specifications and Dimensions are approximate and for reference only. We reserve the right to change specifications and/or dimensions without notice.
* Please consult factory for a complete list of dimensions including metric conversions.
* Consult factory for availability of specific models.
* Graphics contained in this brochure may not be representative of actual product.

APPLICATIONS

ENGINEERED SYSTEMS

Fulton's engineering and design capabilities are unmatched in the industry when it comes to providing comprehensive solutions to custom-designed hydronic systems. Our team of engineers and project managers assists in the specification and design of a "turnkey" system for each application. Skid-mounted hydronic systems provide simplified installation with single-point water, fuel and electrical connections available. From design to complete fabrication, trust Fulton and our many years of experience to build a system you can rely on for years to come.

MODSYNC SEQUENCING SYSTEM

The ModSync interfaces with multiple condensing boilers to maximize the efficiency of hydronic systems. The Modsync's reset functionality adjusts the hydronic loop temperature setpoint based on the outdoor temperature. The sequencing logic maintains multiple boiler stages at minimum input capacities to match the heating load. Lower loop temperatures and lower boiler firing rates allow for significant energy savings, while still maintaining building comfort levels.

The sequencing logic can also be customized for hybrid (condensing/non-condensing), steam and thermal fluid systems.

Fulton® The heat transfer innovators.

Fulton Heating Solutions, Inc.
972 Centerville Road, Pulaski, NY 13142
Call: (315) 298-5121
www.fulton.com

/Fulton-Companies
/FultonBoiler
@FultonBoiler

VTG-BRO_2014-0411

ECM 14.2
STABLE: CONDENSING BOILERS FOR HEATING

C

CLEARFIRE®

CONDENSING FIRETUBE BOILER DESIGNED FOR MAXIMUM HYDRONIC SYSTEM EFFICIENCY 500 TO 3,300 MBTU

Unmatched Efficiency and Low-NOx Technology in a Condensing Boiler

The ClearFire®-C is a completely integrated solution with firetube heat exchanger, premix burner and boiler management controls. The advanced heat exchange design in the ClearFire-C allows the boiler to achieve efficiencies up to 99%, and the modulating premix burner delivers high turndown and NOx levels to less than 20 ppm. This boiler is ideal for central heating applications and indirect hot water supply for working pressures up to 125 psig.

ClearFire®–C

500–3,300 MBTU/hr

CONDENSING HYDRONIC

Features

- Metal fiber premix modulating burner for ultra-low NOx emissions
- Patented ALUFER® firetube heat exchanger
- Dual temperature returns provide 6+% efficiency gain
- Optional dual gas train for critical backup fuel source
- Fresh air inlet connection for sealed combustion
- Thermal shock resistance
- Low hydraulic resistance (ideal for primary variable flow applications)
- Capable of handling low flow situations, meaning no flow switch is required
- High water volume content to reduce cycling, so no buffer tank required
- No minimum temperature requirement
- Easy-access, hinged burner boiler lid to aid burner servicing
- Low NOx SCAQMD pre-certified
- cULus listed for natural and propane gas
- Manufactured to ASME section IV
- Low noise with less than 70 dBA at 3 feet

Designed for Maximum Efficiency

1. Falcon control for boiler modulation, safety and system integration
2. Premix modulating blower assembly
3. 1:1 fuel-air ratio gas valve control
4. Metal fiber premix burner for ultra-low emissions
5. Patented ALUFER firetubes for maximum condensing efficiency
6. Dual temperature return connections for 6+% efficiency gain
7. Flue condensation collection reservoir

Intelligent Integrated Controls

The Cleaver-Brooks Falcon is a proven boiler/burner management control that provides an intuitive operator interface featuring integrated burner sequencing, trending, flame safety, modulation, alarms, lockout, and much more, ensuring your boiler system operates at peak efficiency, while providing necessary safety and reliability.

User-friendly Controls

The Cleaver-Brooks Falcon control with integrated lead/lag optimizes the boiler room's operational efficiency while delivering precise temperature control to meet heating demands. The Cleaver-Brooks Falcon can communicate with your building's Energy Management System (EMS), which helps maximize overall system efficiency.

- Touch-screen graphics with trending
- Multiple loop PID set point control (central heat, domestic hot water and lead/lag)
- Configurable lead/lag control to match system requirements
- Pump, valve, damper enable/disable
- Outdoor temperature reset
- Post shutdown pump delay
- Remote enable and set point
- ModBus (RS485) Communications

Optimal Hydronic Boiler Room Management

The ClearFire®-C condensing boiler operates most efficiently at reduced firing rates. The Falcon lead/lag control is uniquely capable of taking advantage of the CFC's combustion and thermal performance characteristics to sequence and modulate CFC boilers to maximize system efficiency.

The Falcon lead/lag control uses the common base load firing rate method to sequence and modulate a multiple-boiler system. This approach optimizes the boilers' operating efficiency while minimizing energy-wasting short cycling. The elimination of short cycling minimizes purge and standby losses, while extending the life and reliability of your boiler system.

Single Return Efficiency as a Function of Temperature

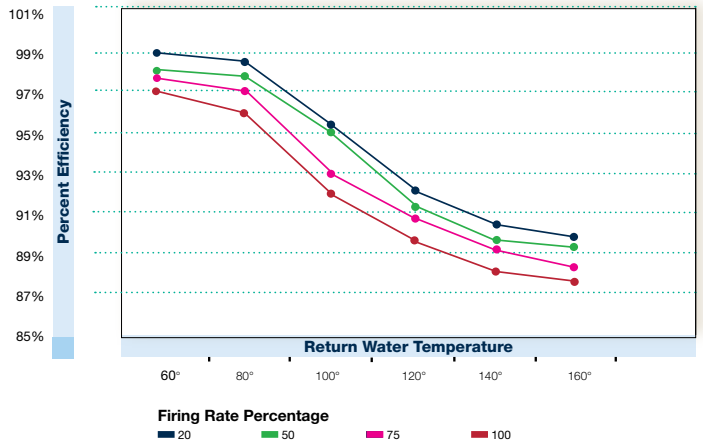

The Latest Boiler Design Technology

The ClearFire®-C, featuring ALUFER® technology, is the best condensing boiler on the market. Designed from the ground up to provide maximum condensing efficiency, the most reliable operation and complete system design flexibility. The dual return advantage provides a 6%+ efficiency gain. The ClearFire-C was designed with the boiler operator in mind; from the hinged burner to the built-in service platform, no other boiler is as easy to maintain.

ALUFER® FIRETUBE TECHNOLOGY

Our heat exchanger features the ALUFER firetube technology and is constructed from an inner (fireside) aluminum alloy finned surface, die-fitted within an outer duplex stainless steel tube, providing exceptional heat exchange characteristics. The corrosion-resistant properties of the ALUFER firetube assure long life and reliability of the boiler.

- **Thermal conductivity is 10 times greater than stainless alone**
- **Fireside is divided into 10 flow channels for maximum heat transfer and condensing performance**
- **Provides the maximum effective heating surface where it is needed the most**
- **Heating surface up to five times larger than other condensing boilers**

HEAT EXCHANGER

Every aspect of the true counterflow design is engineered to ensure the maximum effective heat transfer possible. Our proven firetube arrangement ensures reliability and longevity. The large water volume and low pressure drop inherent in our firetube design make it ideal for variable flow primary pumping applications.

MODULATING PREMIX BURNER

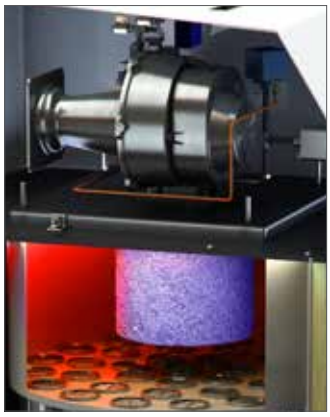

The modulating premix burner and link-ageless control automatically adjust the air/gas mixture for maximum efficiency and optimum turndown. A symmetrical, 360° even-temperature heat output is achieved from the burner, providing clean combustion with ultra-low NOx emissions of less than 20 ppm as standard and less than 9 ppm as optional.

WARRANTY

In addition to the standard warranty, the pressure vessel is warranted (non-prorated) for 20 years against thermal shock and 10 years against fireside condensation corrosion. The burner canister is warranted for five years.

Dual Return Advantage

The ClearFire®-C and ClearFire®-LC's Dual Return Advantage offers more opportunity to improve system efficiency. Most hydronic systems blend returns from different loops, compromising the performance of your condensing boiler system. The combination of our counterflow heat exchanger and ALUFER firetubes is what allows you to connect a cold (less than 130F) return to the lower inlet connection and connect a high-temperature (greater than 140F) return to the upper inlet connection, realizing a 6+% gain in efficiency by achieving true condensing performance even in applications with high-pressure heating loops.

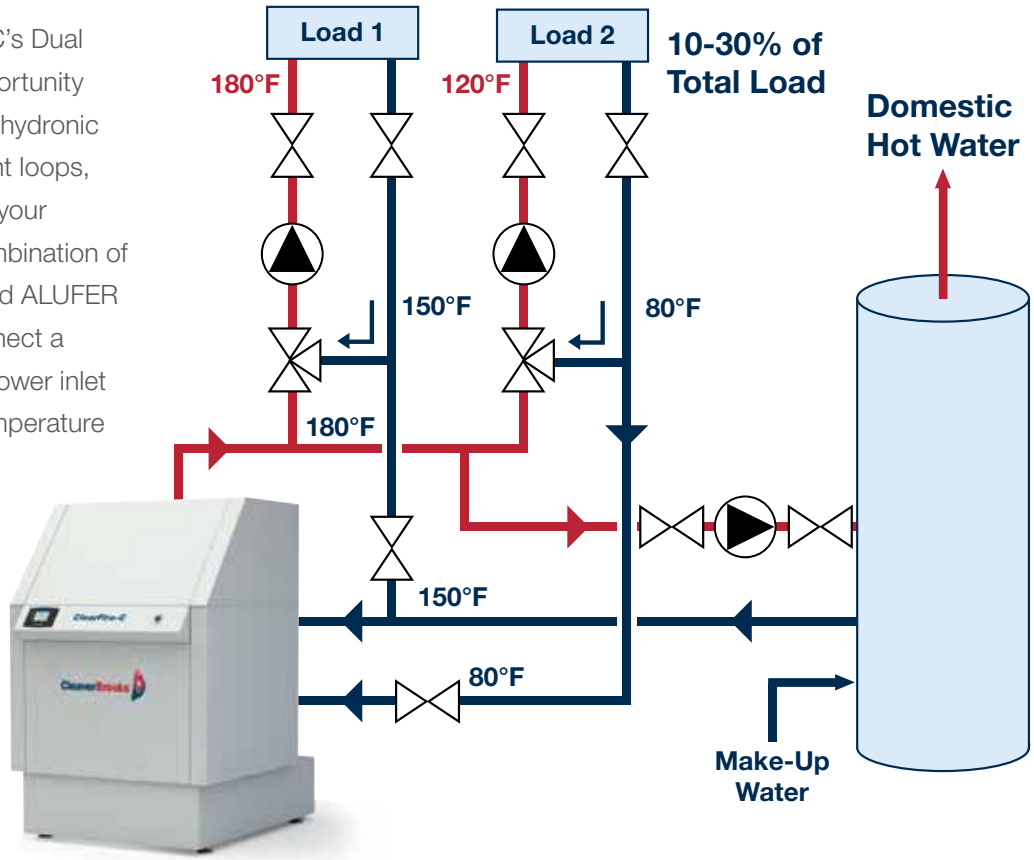

Dual Return High Efficiency as a Function of Low-Temperature Return Flow Percentage

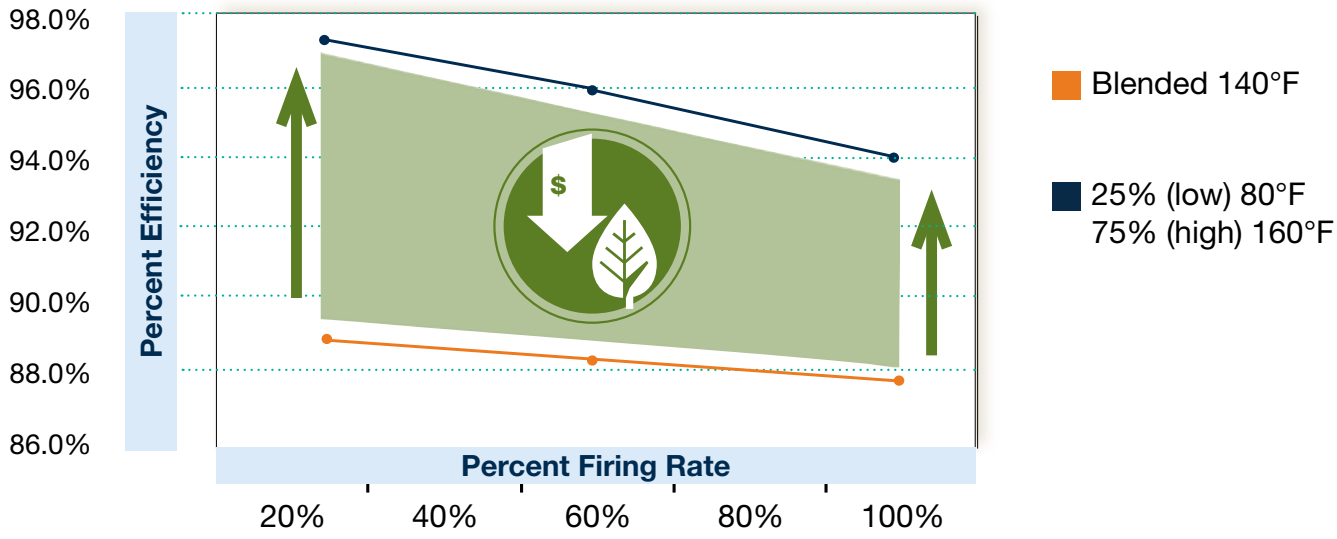

ClearFire®-C Boiler Dimensions and Ratings

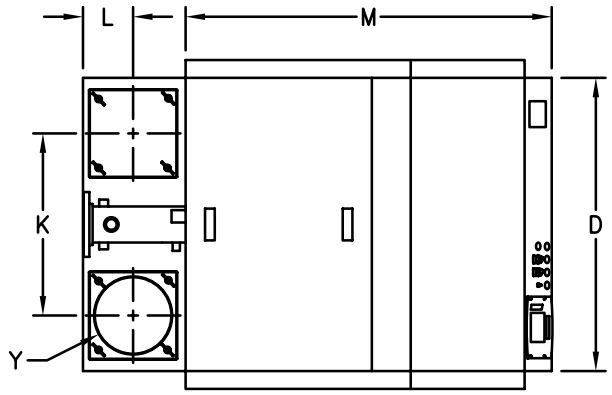

Plan view

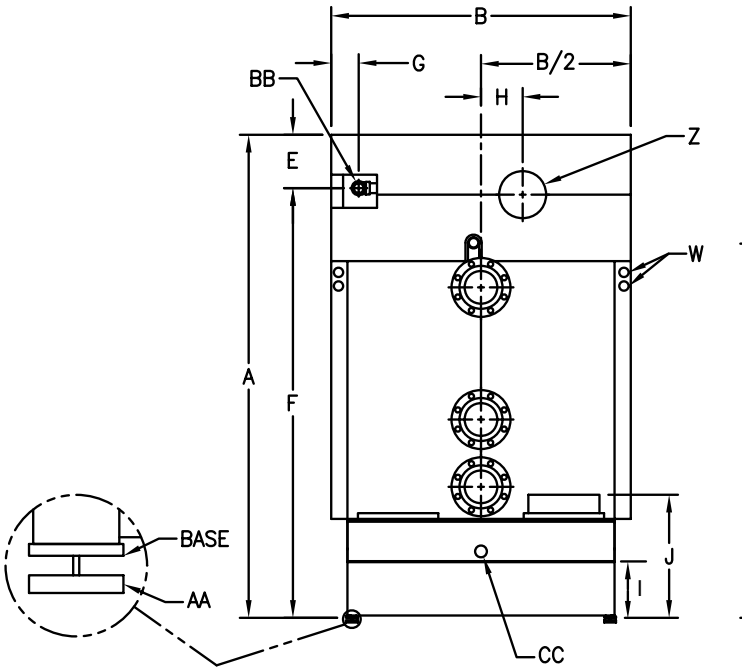

Rear view

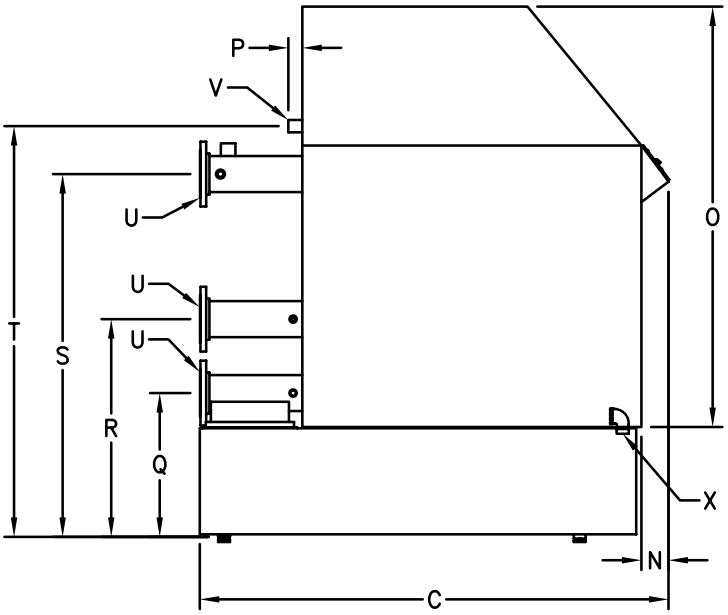

Side view

ITEM	DIMENSIONS	BOILER MODEL						
		500	750	1000	1500	1800	2500	3300
	MAXIMUM INPUT (BTU/HR)	500,000	750,000	1,000,000	1,500,000	1,800,000	2,500,000	3,300,000
A	OVERALL HEIGHT	71.9"	71.9"	75.4"	81.5"	81.5"	81.9"	85"
B	OVERALL WIDTH	32.3"	32.3"	36.6"	43.7"	43.7"	50.8"	61.3"
C	OVERALL DEPTH	48.9"	48.9"	64.0"	65.6"	65.6"	72.3"	86.3"
D	WIDTH LESS CASING	26.8"	26.8"	31.1"	38.2"	38.2"	45.3"	55.5"
E	GAS CONNECTION TO TOP OF CASING	7.8"	7.8"	9.2"	9.5"	9.5"	9.4"	10"
F	GAS CONNECTION TO FLOOR	64.1"	64.1"	66.2"	72"	72"	72.5"	75"
G	SIDE OF CASING TO GAS CONNECTION	2.5"	2.5"	3.8"	4.9"	4.3"	5.2"	5.1"
H	BOILER CENTERLINE TO AIR INLET	4.3"	4.3"	3.9"	7.0"	7.0"	7.0"	7.1"
I	FLOOR TO BOTTOM OF BASE	10.3”	10.3”	10.3”	10.3”	10.3”	10.3”	10.3”
J	FLOOR TO TOP OF STACK CONNECTION	18.6"	18.6"	18.1"	19.1"	19.1"	20.9"	21.4"
K	CENTERLINE TO CENTERLINE OF STACK STUB	15.4"	15.4"	16.9"	21.0"	21.0"	28.1"	35.8"
L	REAR OF BOILER TO CENTERLINE OF STACK STUB	5.4"	5.4"	7.5"	8.1"	8.1"	8.6"	10.0"
M	FRONT OF BOILER TO REAR OF CASING	38.8"	38.8"	49.6"	49.4"	49.4"	56.5"	67"
N	CONTROL PANEL PROJECTION	4.1"	4.1"	4.1"	4.1"	4.1"	4.1"	4.3"
O	CASING HEIGHT	56.2"	56.2"	60"	65.4"	65.4"	65.4"	67"
P	AIR VENT LINE PROJECTION	7.8"	7.8"	7.3"	8.1"	8.1"	8.7"	4.7"
Q	FLOOR TO CENTERLINE OF LOWER RETURN CONNECTION	19.7"	19.7"	20"	21.1"	22"	23"	24.1"
R	FLOOR TO CENTERLINE OF UPPER RETURN CONNECTION	28.5”	28.5”	29”	31”	33”	34.5”	35.5”
S	FLOOR TO CENTERLINE OF SUPPLY CONNECTION	54.4"	54.4"	56.6"	57.5"	56.9"	56.8"	59.1"
T	FLOOR TO CENTERLINE OF AIR VENT	59.9"	59.9"	62"	62.9"	62.9"	64.8"	66.4"
AA	BOILER ADJUSTMENT FOOT HEIGHT	2.5"	2.5"	2.5"	2.5"	2.5"	2.5"	2.5"
AB	HEIGHT ABOVE BOILER FOR BURNER SERVICE	14"	14"	14"	14"	14"	14"	18"
	CONNECTIONS							
U	WATER SUPPLY, 150 RF FLG	2 1/2"	2 1/2"	2 1/2"	3"	4"	5"	5"
V	BOILER AIR VENT, NPT	1 1/2"	1 1/2"	1 1/2"	1 1/2"	1 1/2"	1 1/2"	1 1/2"
W	ELECTRICAL CONDUIT, LEFT OR RIGHT	1.6"	1.6"	1.6"	1.6"	1.6"	1.6"	1.6"
X	BOILER DRAIN, NPT	1 1/2"	1 1/2"	1 1/2"	1 1/2"	1 1/2"	1 1/2"	1 1/2"
Y	FLUE GAS NOMINAL OD, LEFT OR RIGHT OPTION	6"	6"	8"	10"	12"	12"	12"
Z	COMBUSTION AIR OPTION	4" or 6"	4" or 6"	4" or 6"	6" or 8"	6" or 8"	8"	8"
BB	GAS CONNECTION, NPT	1"	1"	1"	1 1/2"	1 1/2"	1 1/2"	2"
CC	CONDENSATE DRAIN, NPT	3/4"	3/4"	3/4"	3/4"	3/4"	1"	1"
DD	WATER RETURN (UPPER) RF FLANGE	2 1/2"	2 1/2"	2 1/2"	3"	4"	5"	5"
EE	WATER RETURN (LOWER) RF FLANGE	2 1/2"	2 1/2"	2 1/2"	3"	4"	5"	5"
	RELIEF VALVE OUTLET (125# SETTING)	1"	1"	1"	1"	1"	1"	1"
	VOLTAGE FAN MOTOR	115/1	115/1	115/1	115/1	115/1	115/1	208-240/3
	VOLTAGE CONTROL CIRCUIT	115/1	115/1	115/1	115/1	115/1	115/1	115/1
	RATINGS							
	BTU/HR OUTPUT @ SEA LEVEL TO 2000' NAT GAS*	480,000	697,000	940,000	1,410,000	1,690,000	2,412,500	3,184,500
	SHIPPING WEIGHT, LBS.	1,160	1,160	1,795	2,225	2,505	3,640	4,835
	OPERATING WEIGHT, LBS.	1,585	1,585	2,545	3,165	3,325	4,685	6,570
	INLET GAS PRESSURE, LO FIRE/HI FIRE "W.C.	6.8/5.0	6.8/5.0	6.8/5.0	10.0/7.0	7.0/5.0	9.5/8.0	6.8
	MAX. AMP DRAW FAN @ 115V/1PH	4.0	4.0	4.0	8.5	12.0	12.0	6.9**
	AMP DRAW CONTROL CIRCUIT	1.3	1.3	1.5	1.5	2.0	2.0	2.3
	FIRESIDE HEATING SURFACE	185	185	307	445	596	937	1,258

Notes:
* Output based on return water temperature at 80°F
** AMP draw @ 208V/3PH

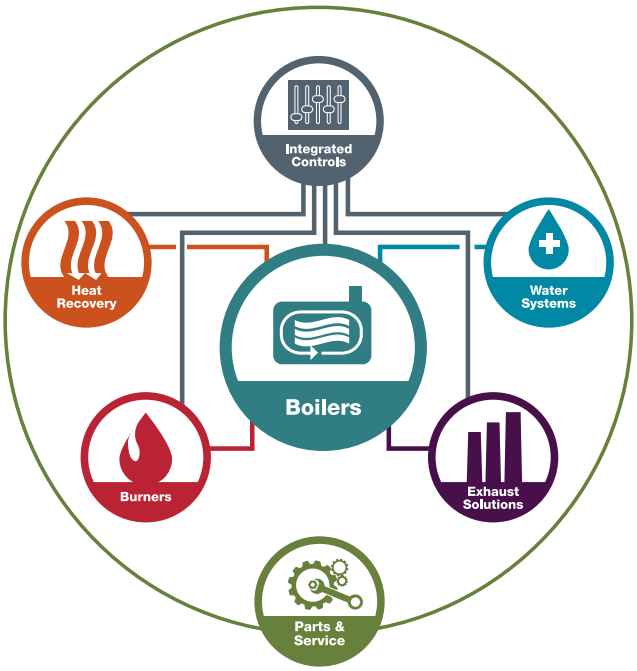

Total Integration goes far beyond boilers.

For more than 80 years, Cleaver-Brooks has built a reputation for innovation in the boiler solutions industry. We remain committed to introducing technology and products that enable a more energy-efficient and environmentally friendly generation of steam and hot water.

When you come to us for a condensing boiler solution, you can know that each element is created to the highest standards and all will work together seamlessly to give you a highly efficient and reliable solution for protecting your boiler system. To learn more, please call or visit us online.

CleaverBrooks®

Packaged Boiler Systems
221 Law Street • Thomasville, GA 31792 USA
800-250-5883 • info@cleaverbrooks.com
cleaverbrooks.com

Boiler system icons are copyrights of Cleaver-Brooks, Inc.

Printed in the USA
©2014 Cleaver-Brooks, Inc
CB-7957
01/14

CONDENSING COMMERCIAL GAS WATER HEATERS

ECM 14.2
TOWER: DOMESTIC HOT WATER HEATER

ARMOR X2™
COMMERCIAL CONDENSING WATER HEATER

SMART TOUCH™
TOUCHSCREEN OPERATING CONTROL
FEATURING A BUILT-IN CASCADING SEQUENCER

1.0, 1.3 AND 1.5 MILLION BTU/HR

FIRING RATE MODULATION TO 10:1

LESS THAN 20 ppm NOx

DIRECT-VENT FLEXIBILITY TO 100 FEET

LOW NOx Certified
PROTECTING THE ENVIRONMENT

96%
THERMAL EFFICIENCY

Lochinvar®
High Efficiency Water Heaters, Boilers and Pool Heaters

Lochinvar.com

ARMOR X2™

COMMERCIAL CONDENSING WATER HEATER

An Innovation in Commercial Water Heating

The ARMOR X2 Commercial Water Heater combines stainless steel heat exchanger technology with **Mod**ulating **Con**densing combustion to deliver efficiencies as high as 96%. With models at 1.0, 1.3 and 1.5 million BTU/hr inputs, ARMOR X2 will serve a large range of commercial applications and add the "green" touch that building owners and facility managers desire.

ARMOR X2 delivers new levels of innovation with SMART TOUCH™... touchscreen technology that puts total operational control at your fingertips! With Lochinvar SMART TOUCH, it's easier than ever to set up a perfectly synchronized "green" system, and access a complete onboard database of real-time operational data and performance history.

Other features of the ARMOR X2 include space-saving footprints, direct-vent design with intake and exhaust runs up to 100 equivalent feet, and a built-in cascading sequencer for up to 8 water heaters, delivering up to 12 million BTU/hr capacity.

The ARMOR X2

Lochinvar's largest commercial condensing water heater, the Armor X2 offers peace of mind in the truest sense. With two independent combustion systems operating with two 316L stainless steel heat exchangers, along with gas valves and combustion blowers designed to work in concert, worries about meeting the domestic hot water demand are a thing of the past. This built in redundancy means that if a failure of a component such as the spark igniter occurs on one heating module the second heating module will come on-line to meet the hot water demand.

With unparalleled modulation capabilities the Armor X2 boasts a turndown ratio of 10:1. This means that at times when the hot water demand requires less than the full input capabilities of the water heater, Armor X2 will deliver the proper amount of heat to exactly match the demand with inputs as low as 10% of the maximum water heater input.

Couple the Armor X2 with a Lock-Temp Storage tank for long system life and high performance. All Lock-Temp storage tanks are equipped with the patented Lock-Temp baffle. This baffle isolates the turbulence of incoming water thus allowing the tank to be a constant temperature throughout, this feature allows for an industry best 80% tank drawdown.

If foot print, installation costs or final installed appearance are of great concern, consider allowing Lochinvar to create a custom water heater package for your application. Each package is custom built, factory assembled and tested to the meet the requirements of the job. All packages include a welded I-beam skid which houses the water heater plant and associated storage tank(s) for ease of maneuverability and installation.

Direct-Venting up to 100 Feet

Sidewall Vent Termination

ARMOR X2 offers multiple venting options and tremendous flexibility for placement of units within the building, because it permits direct-vent air intake and exhaust runs up to 100 equivalent feet using either PVC, CPVC, Polypropylene or AL29-4C stainless steel vent pipe. Intake and exhaust runs can terminate horizontally through a sidewall or vertically through the roof.

Factory Supplied and Shipped Standard with Every Model

SMART TOUCH

Unequaled Control and Monitoring Functions That Are Easy to Use

Total Control, at Your Fingertips

The full-color Lochinvar SMART TOUCH Main Menu screen is your gateway to complete control of all ARMOR X2 functions, and total access to system performance data and history. Do it all and see it all right here, with or without connecting to a separate PC using Lochinvar SMART TOUCH software.

- Modbus Communication
- Password Security
- Product Service Indicator
- Freeze Protection
- Low Water Flow Indicator
- Night Temperature Setback
- Building Management System Control
- Tank Temperature Readout
- Water Heater Controls
- PC Connection

The ARMOR X2 Combustion System

Advanced Negative Regulation Technology

ARMOR X2 safely and reliably operates with supply gas pressure as low as 4 inches water column, because Negative Regulation (Neg/Reg) technology automatically adjusts fan speed to ensure the correct volume of fuel and air enter the burner.

"Fail-Safe" Direct-Spark Ignition

With each call for heat, two electrodes ignite the fuel/gas mixture. A third electrode then senses for flame. SMART TOUCH will lock out and display the fault if ignition does not occur.

Two-in-One Stainless Steel Heat Exchanger

A primary heat exchanger combined with a secondary heat exchanger captures flue gas heat and eliminates low temperature protection requirements. The stainless steel, pH-tolerant design features a weld-sealed assembly with no O-rings or gaskets. The Armor X2 is ASME Section IV approved and stamped.

Fully Modulating Burner

SMART TOUCH allows fully modulating combustion with 10:1 turndown. The combustion system can fire as low as 10% of maximum input, and modulates the firing rate up to 100% as demand increases. The burner design incorporates a woven steel mesh sleeve over a stainless steel burner tube and fires in a 360° pattern along the entire length of the primary heat exchanger. These together allow ARMOR X2's compact size to excel compared to units with larger multiple burners.

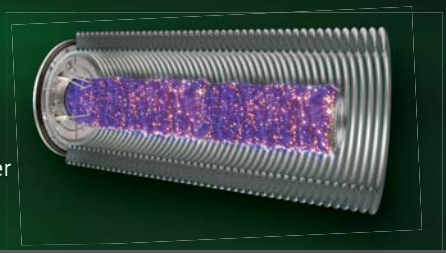

Flexible Venting Options - Up to 100 feet of air intake and 100 feet of exhaust vent with PVC, CPVC, Polypropylene or SS.

Room Air Vertical

Room Air Sidewall

Direct Vent Sidewall

Direct Vent Vertical

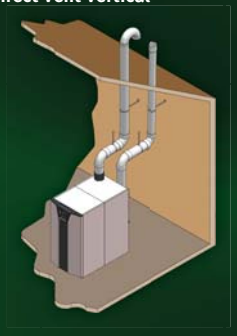

Vertical w/Sidewall Air

Dimensions and Specifications

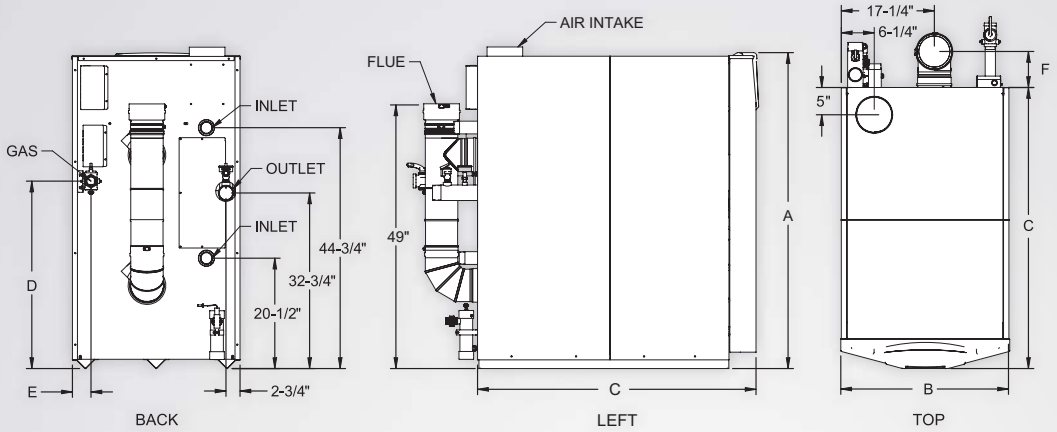

Model Number Guide

AW	N	1500	PM
Model	Natural Gas	Btu/hr Input	Firing Controls

***A**rmor X2 Water Heater,*
***N**atural Gas,*
***1,500**,000 Btu/hr input,*
***PM** Pump Mounted*

ARMOR X2 Water Heater / Dimensions and Specifications

Model Number	Btu/hr Input	Thermal Efficiency	GPH @ 100° Rise	A	B	C	D	E	F	Gas Conn.	Inlet Water Conn.	Outlet Water Conn.	Air Inlet	Vent Size	Shipping Wt. (lbs.)
AWN1000PM	1,000,000	96.0%	1,164	58-3/4″	31″	48″	35″	4-1/2″	15″	1-1/2″	2 x 2″	3″	6″	6″	910
AWN1300PM	1,300,000	96.0%	1,513	58-3/4″	31″	52-1/4″	34-3/4″	3-1/2″	6-3/4″	1-1/2″	2 x 2″	3″	6″	6″	1049
AWN1500PM	1,500,000	96.0%	1,745	58-3/4″	31″	56-1/2″	34-3/4″	3-1/2″	6-3/4″	1-1/2″	2 x 2″	3″	6″	6″	1185

Notes: Change 'N' to 'L' for L.P. Gas Model. No deration on L.P. models. Performance data based on manufacturer test results. 120 VAC /15 AMP circuit required.
All dimensions shown in inches.

Standard Features

- 96% Thermal Efficiency (AHRI Certified)
- Modulating Burner with 10:1 Turndown
  - Direct-Spark Ignition
  - Low NOx Operation
  - Sealed Combustion
  - Low Gas Pressure Operation
- Vertical & Horizontal Venting
  - Category IV Venting up to 100 Feet
  - PVC, CPVC, Polypropylene or AL29-4C Vent Material
  - Sidewall Vent Termination Provided
- ASME Stainless Steel Heat Exchanger
  - Gasketless Design
  - 160 psi Working Pressure
- (2) Low Lead Bronze Circulating Pumps
- On/Off Switch
- Adjustable High Limit with Manual Reset
- Low Air Pressure Switch
- Flow Switch
- Inlet & Outlet Temperature Sensors
- Two Easy Access Terminal Strips
- Temperature & Pressure ASME Relief Valve
- Zero Clearance to Combustible Material
- Approved for Combustible Floor Installation
- 1 Year Warranty on Parts
- 5 Year Limited Warranty (see warranties for details)

SMART TOUCH™ Features

- SMART TOUCH™ Touchscreen Operating Control
  - Full-Color Touchscreen LCD Display
  - Built-in Cascading Sequencer for up to 8 Water Heaters
  - Building Management System Integration with 0-10 VDC Input
  - Password Security
  - Low Water Flow Safety Control & Indication
  - Inlet & Outlet Temperature Readout
  - Freeze Protection
  - Service Reminder
  - Time Clock
- Data Logging
  - Hours Running
  - Ignition Attempts
  - Last 10 Lockouts
- Programmable System Efficiency Optimizers
  - Night Setback
  - Anti-Cycling
- Water Heater Pump Control
  - High Voltage Terminal Strip
  - 120 VAC / 60 Hertz / 1-Phase Power Supply
  - Pump Contacts
- Low Voltage Terminal Strip
  - 24 VAC Auxiliary Device Relay
  - Auxiliary Proving Switch Contacts
  - Alarm on Any Failure Contacts
  - Runtime Contacts
  - Tank Thermostat Contacts
  - Tank Sensor Contacts
  - Cascade Contacts

Optional Equipment

- Alarm Bell
- Condensate Neutralization Kit
- SMART TOUCH PC Software
- Modbus Communications
- Stainless Steel Vent Kits (1300 & 1500)
- BMS Gateway to LON or BacNet

Codes & Registrations

- ANSI Z21.10.3 compliant
- ASME certified, "HLW" stamp
- California Code compliant
- Massachusetts Code compliant
- South Coast Air Quality Management District registered

Patent # 8,371,252

Lochinvar®
High Efficiency Water Heaters, Boilers and Pool Heaters

Lochinvar, LLC
300 Maddox Simpson Parkway
Lebanon, Tennessee 37090
P: 615-889-8900 / F: 615-547-1000
www.Lochinvar.com

AHRI CERTIFIED ENERGY STAR LOW LEAD CONTENT HLW

ECM 14.2
STABLE: DOMESTIC HOT WATER HEATER

Water | Residential Gas
Professional Classic Ultra Low NOx Power Vent Water Heaters

The new degree of comfort.™

Professional Classic™ Ultra Low NOx Power Vent gas water heaters are SCAQMD rule 1121 compliant and offer flexible venting options

Efficiency

- .67 EF
- ENERGY STAR® rated
- More hot water at a low operating cost

Performance

- FHR: 72 - 94 gallons for natural gas
- Recovery rate is 36.4 - 38.4 gallons for natural gas at a 90 degree rise

Guardian System™ & Sensor

- Exclusive air/fuel shut-off device for double protection
- Maintenance free – no filter to clean

Combustion Shut-off System

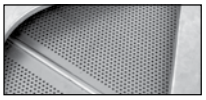
Flame Arrestor Plate

Low Emissions

- Ultra Low NOx radiant burner design
- Stainless steel construction
- SCAQMD Rule 1121 compliant
- Meets 10 ng/J NOx requirements

Self-Cleaning

- EverKleen™ patented system fights sediment build-up
- Reduces fuel costs
- Provides more hot water

Flexible Venting Options

- Long venting lengths up to 100 feet
- PVC, ABS, or CPVC vent pipe options
- Vertical or horizontal termination

Longer Life

- Rheem exclusive R-Tech (resistored) anode rod provides long-lasting tank protection

High Altitude Compliant

- Certified to 5,999 ft. above sea level

Plus…

- Whisper quiet blower
- Enhanced flow brass drain valve
- Temperature and pressure relief valve included
- Low lead compliant
- Durable spark-to-pilot ignitor

Warranty

- 6-Year limited tank and parts warranty*
- With ProtectionPlus™ the 6-year limited tank warranty becomes 10-year

*See Residential Warranty Certificate for complete information

Units meet or exceed ANSI requirements and have been tested according to D.O.E. procedures. Units meet or exceed the energy efficiency requirements of NAECA, ASHRAE standard 90, ICC Code and all state energy efficiency performance criteria.

Professional Classic Ultra Low NOx Power Vent

40 and 50-Gallon Capacities
Natural Gas

LEED Point = 1

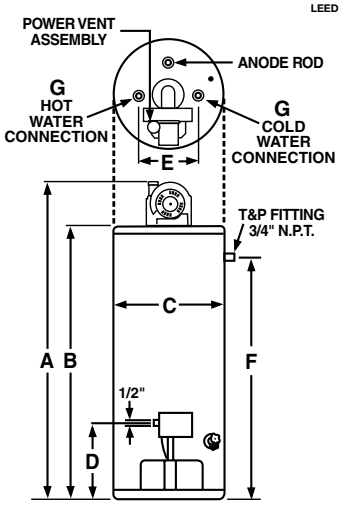

See venting information on back.

DESCRIPTION			FEATURES			ROUGHING IN DIMENSIONS (SHOWN IN INCHES)								ENERGY INFO.
TYPE	GAL. CAP.	MODEL NUMBER	GAS INPUT IN THOUS. BTU/H NAT.	RECOVERY IN G.P.H. 90° RISE NAT.	FIRST HOUR DEL. G.P.H. NAT.	HT. TO TOP OF ASSEMBLY A	TANK HT. B	DIAM. C	HT. TO GAS CONN. D	WATER CONN. CNTR. E	HT. TO SIDE T&P VALVE F	WATER CONN. SIZE G	SHIP. WT. (LBS)	ENERGY FACTOR NAT.
Tall	40	PROG40-36U RH67 PV	36	36.4	72	69-3/4	60	21	17-3/8	8	54	3/4	170	0.67
Tall	50	PROG50-38U RH67 PV	38	38.4	94	69-1/2	59-3/4	23	17-3/8	8	53-3/4	3/4	200	0.67

Energy Factor based on D.O.E. (Department of Energy) test procedures.

PRINTED IN U.S.A. 09/13 WP FORM NO. PROG RHULNPV

40 and 50-Gallon Models Maximum and Minimum Vent Lengths

Maximum and Minimum Vent Lengths for 2” Vents

NUMBER OF 90° ELBOWS WITH VENT TERMINAL	NUMBER OF 45° ELBOWS	MINIMUM PIPE LENGTH REQ. (FT.)	MAXIMUM PIPE LENGTH (FT.)
One (1)	None	3.0	44.0
One (1)	One (1)	3.0	41.0
Two (2)	None	3.0	38.0
Two (2)	One (1)	3.0	35.0
Three (3)	None	3.0	32.0

For the 2" vent, one 90° elbow is approximately equal to 6 feet of pipe. One 45° elbow is approximately equal to 3 feet of pipe.

NOTICE: The mixing of 2" and 3" vent pipe is not recommended. If 3" pipe is used, a 2" to 3" reducer fitting is recommended at the rubber coupling.

This water heater is supplied with a 2" Schedule 40 PVC 45° vent terminal. When venting with 3" pipe, a Schedule 40 PVC 45° vent terminal must be used. Screens for both 2" and 3" vent terminals have been included.

Maximum and Minimum Vent Lengths for 3” Vents

NUMBER OF 90° ELBOWS WITH VENT TERMINAL	NUMBER OF 45° ELBOWS	MINIMUM PIPE LENGTH REQ. (FT.)	MAXIMUM PIPE LENGTH (FT.)
One (1)	None	3.0	95.0
One (1)	One (1)	3.0	92.5
Two (2)	None	3.0	90.0
Two (2)	One (1)	3.0	87.5
Three (3)	None	3.0	85.0
Three (3)	One (1)	3.0	82.5
Four (4)	None	3.0	80.0
Four (4)	One (1)	3.0	77.5
Five (5)	None	3.0	75.0

For the 3" vent, one 90° elbow is approximately equal to 5 feet of pipe. One 45° elbow is approximately equal to 2.5 feet of pipe.

In keeping with its policy of continuous progress and product improvement, Rheem reserves the right to make changes without notice.

Rheem Water Heating • 101 Bell Road
Montgomery, Alabama 36117-4305 • www.rheem.com

PRINTED IN U.S.A. 09/13 WP FORM NO. PROG RHULNPV

ECM 16
CHP UNIT

Aegen ThermoPower TP75

The Energy Machine that Saves You Green.

Operate your building at a fraction of the cost with the Aegen ThermoPower TP75.

Green. Power. Savings.

The AEGEN THERMO POWER 75 is a low emissions, compact, modular combined heat and power (CHP) system producing 75 kW of power and 5.23 therms of heat per hour. A three-way non-selective catalyst reduction (NSCR) emissions control package includes two catalytic converters, and temperature and oxygen sensors, and controls designed to reduce emissions of nitrogen oxide, carbon monoxide, and hydrocarbons. The CHP module has a natural gas-fired reciprocating engine, induction generator, heat recovery system, sound attenuating enclosure, electrical switchgear, and solid-state controls for automatic and unattended operation. High efficiency heat recovery components consist of an oil cooler, engine jacket for heat transfer, marine type exhaust gas manifolds and exhaust gas heat exchangers. The AEGEN THERMO POWER 75 operates in parallel with existing mechanical and electrical systems in the facility. The module includes an advanced utility-grade relay (C.S.A., and C.E. listed or certified) for electrical protection and redundancy as standard equipment.

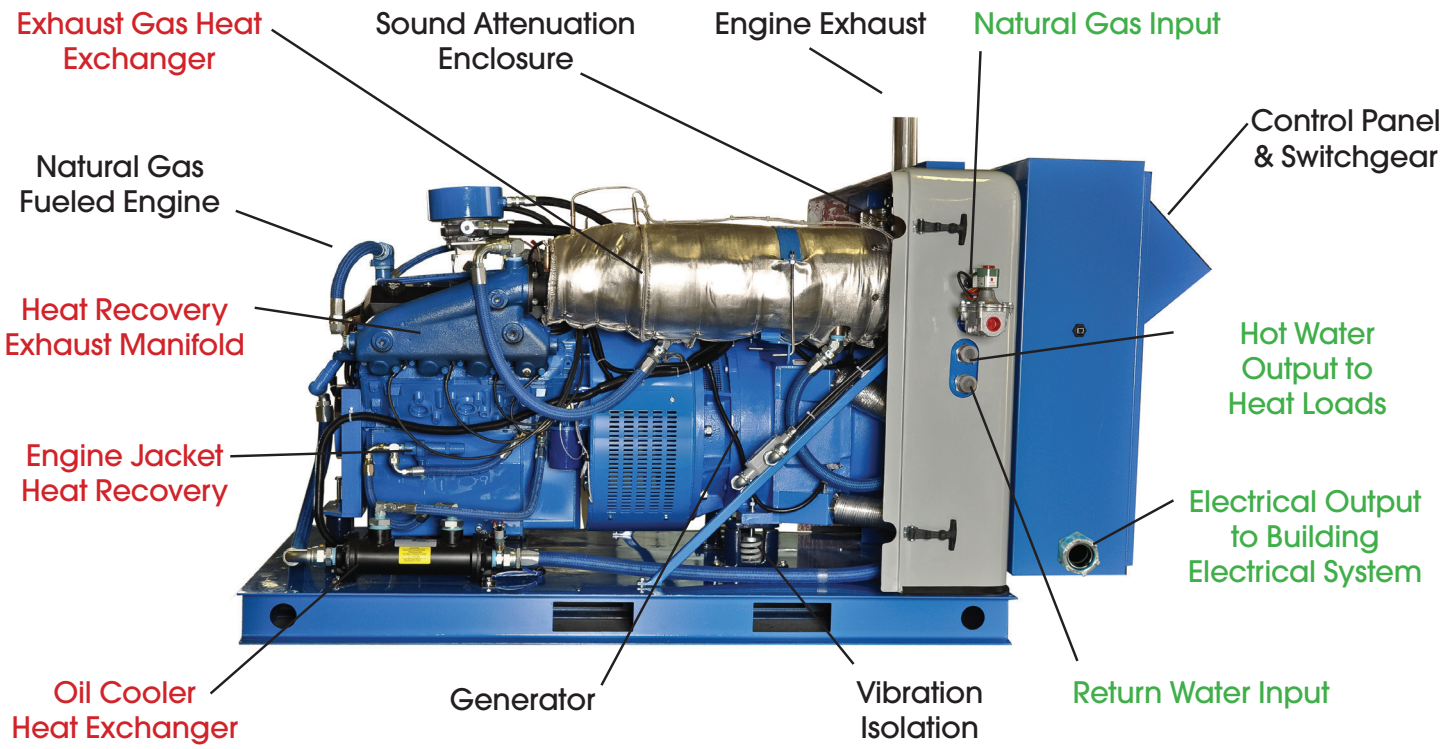

AEGIS ENERGY SERVICES, INC.
55 Jackson Street, Holyoke, MA 01040 • (413) 536-1156 • (413) 536-1104 (fax)
Website: www.AegisEnergyServices.com • Email: Aegis@AegisEnergyServices.com

Aegen ThermoPower TP75

The Energy Machine that Saves You Green.

Important Specifications	
Electrical Power Output	75kW
Thermal Output	523,000 BTU/Hour
Gas Input	930 Standard cubic feet per hour (scfh)
Required Gas Pressure	6"- 28" water column
Efficiency	82.1% at HHV of 1,020 BTU/SCF
Max Output Water Temperature	230˚ F
Weight	3,050 pounds
Suspension	Vibration isolation mounts
Dimensions	46" width x 96" length x 49" height
Acoustic Level (enclosed)	70 dba @ 20'
Output Voltage	208 V & 460 V nominal, 3 Phase, 3-wire
Emissions	Aegen ThermoPower model meets stringent air quality standards and requirements.

Features

- Reliable, proven, EPA-recognized technology
- Highly efficient
- Environmentally sound with low emissions
- Quiet operation
- Modular – scaleable into larger systems
- Compact – easily fits in most buildings
- Indoor or outdoor installation
- Ease of installation – no business disruption
- Remote monitoring and control
- Digital display and user-friendly interface
- Induction-based technology
- Infinite system life with maintenance program
- Electric and thermal load following
- Modbus compatible for networking with building automation systems
- Reliable, proven, EPA-recognized technology
- NYSERDA approved
- Installed by Aegis Energy Services with 29 years experience and proven track record of 500 CHP systems

AEGIS ENERGY SERVICES, INC.

55 Jackson Street, Holyoke, MA 01040 • (413) 536-1156 • (413) 536-1104 (fax)
Website: www.AegisEnergyServices.com • Email: Aegis@AegisEnergyServices.com

ECM 23 OPTION 1
ELECTRIC STEAM GENERATOR

User Manual

& Installation Instructions

LB-40 thru LB-60

IMPORTANT – READ ALL INSTRUCTIONS BEFORE OPERATING

All steam boilers are built in accordance with ASME miniature boiler code.

NOTE: It is the responsibility of the installer to conform to any state or local codes. If further inspection, following modification by installer, is required under state or local codes, that is the responsibility of the local installer.

Electro-Steam
ESTABLISHED 1952

www.electrosteam.com

rev. 12072010

WARNING - The following labels have been placed on this boiler for **YOUR SAFETY**. Failure to observe these instructions could lead to **PROPERTY DAMAGE**, **SEVERE INJURY,** or even **DEATH**

CAUTION
HOT

CAUTION
THROW OFF MAIN POWER SWITCH BEFORE WORKING ON ELECTRICAL CABINET

A MANUAL WAS SHIPPED WITH THIS BOILER. IT IS IMPORTANT THAT YOU READ, UNDERSTAND, AND OPERATE THIS STEAM GENERATOR IN ACCORDANCE WITH THE OPERATING INSTRUCTIONS CONTAINED IN THE MANUAL. IF FOR ANY REASON YOU DO NOT HAVE A MANUAL, CALL ELECRTO-STEAM AT 800-634-8177

REPLACE GLASS EVERY SIX MONTHS

RETIGHTEN SIGHT GLASS BEFORE USE

CAUTION USE ELECTRICAL SUPPLY CONDUCTORS RATED FOR A MINIMUM OF 90°C

TERMINALS ARE SUITABLE FOR COPPER WIRE ONLY
U.L. 834 PAR. 4416

AMBIENT TEMPERATURE AROUND UNIT NOT TO EXCEED 105° F

TABLE OF CONTENTS

1.) INSTALLATION INSTRUCTIONS **4**

2.) OPERATION & SEQUENCE OF EVENTS **5**

3.) CLEANING & MAINTENANCE **6-14**

- **3.1)** MANUAL "BLOW DOWN" **6**
- **3.2)** CLEANING WATER LEVEL PROBES **6-7**
- **3.3)** CLEANING OR REPLACING HEATERS **7**
- **3.4)** REPLACING GLASS GAUGE AND RUBBER WASHERS **8-9**
  - **3.4.1)** BRASS SIGHT GLASS (STANDARD) 8
  - **3.4.1)** BRASS SIGHT GLASS (SEISMIC) 9
- **3.5)** CHAMBER CLEANING & CHEMICAL TREATMENT **10-11**
- **3.6)** PRESSURE CONTROL DATA SHEET **12**
- **3.7)** SETTING THE PRESSURE CONTROLS **13-14**

4.) CALCULATIONS & DATA SHEETS **15-17**

- **4.1)** HEATER POWER & VOLTAGE RATINGS **15**
- **4.2)** TOTAL POWER RATING CALCULATIONS **15**
- **4.3)** AMPERAGE CALCULATIONS **16**
- **4.4)** ACTUAL POWER RATING CALCULATIONS **16-17**
- **4.5)** STEAM CAPACITY CALCULATIONS **17**

5.) DRAWINGS & WIRING SCHEMATICS **18-32**

- **5.1)** PARTS LEGENDS **18-21**
  - **5.1.1)** LB 40-60 (LOW PRESSURE) (0-15PSI) 18
  - **5.1.2)** LB 40-60 (LOW PRESSURE) (MAFD) (0-15PSI) 19
  - **5.1.3)** LB 40-60 (HIGH PRESSURE) (0-30, 0-100PSI) 20
  - **5.1.4)** LB 40-60 (HIGH PRESSURE) (MAFD) (0-30, 0-100PSI) 21
- **5.2)** INSTALLATION DATA SHEETS **22-25**
  - **5.2.1)** LB 40-60 (LOW PRESSURE) (0-15PSI) 22
  - **5.2.2)** LB 40-60 (LOW PRESSURE) (MAFD) (0-15PSI) 23
  - **5.2.3)** LB 40-60 (HIGH PRESSURE) (0-30, 0-100PSI) 24
  - **5.2.4)** LB 40-60 (HIGH PRESSURE) (MAFD) (0-30, 0-100PSI) 25
- **5.3)** CONTROL WIRING SCHEMATICS **26-29**
  - **5.3.1)** LB 40-60 (LOW PRESSURE) (0-15PSI) 26
  - **5.3.2)** LB 40-60 (LOW PRESSURE) (MAFD) (0-15PSI) 27
  - **5.3.3)** LB 40-60 (HIGH PRESSURE) (0-30, 0-100PSI) 28
  - **5.3.4)** LB 40-60 (HIGH PRESSURE) (MAFD) (0-30, 0-100PSI) 29
- **5.4)** HEATER WIRING SCHEMATICS **30-32**
  - **5.4.1)** LB (40-80KW) (THREE PHASE) (208-240V) 30
  - **5.4.2)** LB (40-60KW) (THREE PHASE) (380-425V) 31
  - **5.4.3)** LB (40-60KW) (THREE PHASE) (440-600V) 32

6.) TERMS & CONDITIONS **33**

1.) INSTALLATION INSTRUCTIONS

LITTLE BOILER "LB-SERIES"

The Electro-Steam Generator design consists essentially of a high pressure chamber filled with water that is heated by one or more submerged resistance type electric heating elements. Automatic controls are provided to maintain the pre-set operating pressure and water level. Safety features include: automatic low-water cutoff (manual low-water reset optional), dual pressure controls, safety valve, and visible water level gauge. All of our generators are built in accordance with A.S.M.E. Miniature Boiler Code and are individually inspected and stamped by an Authorized National Board Insurance Inspector.

IMPORTANT – READ ALL INSTRUCTIONS BEFORE OPERATING

Important – Set unit perfectly level, and as close as possible to the steam vessel or appliance it will operate. For generator measurements, refer to Installation Data Drawing attached. For interpretation of numbered items, refer to Parts Legend Drawing attached. NOTE: Ambient temperature around this unit must not exceed 105°F.

CONNECTIONS:

Periodically check all plumbing and electrical connections for tightness; this should also be done before initial start-up.

ELECTRICAL:

This generator must be connected to a disconnect switch protected by fuses or circuit breakers with the proper size wire by a licensed electrician in accordance with N.E.C. and your local codes – Voltage, KW, and Phase requirement are marked on the nameplate.

WATER SUPPLY:

Connect city water line to **Y-Strainer (#6)**.
Purity: NOT to exceed 26,000 OHMS per CM
Temperature Range: 32°F – 140°F or 0°C – 60°C.
Pressure Range: 20PSI – 150PSI.

***CAUTION:** The **Pump (#8)** requires clean tap water. If the water is not free of foreign matter, a 5 micron cartridge filter should be installed in the water supply line.

STEAM OUTLET:

Connect **Steam Outlet Valve (#16)** to piece of equipment, vessel, room, or area to be operated by the Electro Steam Generator.

SAFETY VALVE & DRAIN:

Separately route the **Safety Valve (#18) & Drain (#23)** to a high temperature drain ***NO PVC**. Discharging pipe of the **Safety Valve (#18)** should never be smaller than the valve outlet and should be rigidly supported, placing no weight on the safety valve itself. If equipped with **Motorized Auto-Flush & Drain "MAFD" (#20)**, it should be routed with the **Drain (#23)**.

2.) OPERATION & SEQUENCE OF EVENTS

IMPORTANT – READ INSTALLATION INSTRUCTIONS BEFORE OPERATING

1. Turn on water supply from the source to the Generator.
2. **OPEN** all valves on the Generator except for the **Manual Drain (#19)**.
3. Place main disconnect switch in **ON** position.
4. Place **ON/OFF Switch (#2)** in **ON** position.
   - The **Water Solenoid (#7)** [and **Pump (#8)**, if high pressure] will engage and the chamber will begin to fill with water. As the water level rises, it will make contact with the **(G OR D)** and **(A)** probes, indicating the heaters are safely submerged. At this time the contactor(s) will engage, supplying power to the heaters, causing steam pressure to accumulate.
   - The chamber will continue to fill with water until 1 second after the water makes contact with the **(C)** probe, causing the **Water Solenoid (#7)** [and **Pump (#8)**, if high pressure] to turn off.
   - If the contactor(s) still have not engaged at this time, you may need to press the **Safety Reset (#13)** on the "**Safety" Pressure Control (#12)**. If your generator is equipped with a **Manual Low-Water Reset (MLWR) (#3)**, it must be pressed at this time to engage the contactor(s). If your generator is equipped with a **Motorized Auto-Flush & Drain (MAFD) (#20)**, you must wait until it closes before the contactor(s) will engage. (approximately 3 minutes)
   - Steam pressure will continue to rise until is reaches its set operating pressure. This may take up to 25 minutes. At this time, the "**Control" Pressure Control (#12)** will cause the contactor(s) to disengage. The pressure will drop approximately 2-8 PSI until the "**Control" Pressure Control (#12)** causes the contactor(s) to reengage, causing the pressure to rise again. The contactor(s) will continue to cycle on and off during operation.
5. The Generator is now fully operational and will produce steam until it is turned off.
   - As steam is exhausted, the water level will drop until 3 seconds after it breaks contact with the (C) probe. At this time, the **Water Solenoid (#7)** [and **Pump (#8)**, if high pressure] will engage and the chamber will again fill with water. The chamber will continue filling until 1 second after the water makes contact with the (C) probe. The **Water Solenoid (#7)** [and **Pump (#8)**, if high pressure] will continue to cycle on and off during operation.
6. To shut off the Generator, place **ON/OFF Switch (#2)** in **OFF** position. Pressure will drop naturally as the chamber cools, or the Generator may be drained manually through **Manual Drain (#19)**. (See Manual Blow Down 3.1)

WARNING – **HOT WATER** and **STEAM** under **HIGH PRESSURE** can lift drain pipes right off the ground and cause **SERIOUS INJURY**. Make sure drain pipe is **SECURE** and **CANNOT** move. The drain must be directed into a **HIGH TEMPERATURE** drain (**NO PVC**) or outside.

3.) CLEANING & MAINTENANCE

The following cleaning procedures are **HIGHLY RECOMMENDED** in order to keep your Steam Generator in the best operating condition at all times.

3.1) MANUAL "BLOW DOWN"

A Manual "Blow Down" is an easy way to **GREATLY** extend the life of your Steam Generator. Using a Motorized Auto-Flush & Drain (MAFD) of course helps, but is not a "Cure all". The following is the **LEAST** amount of times recommended to blow down your generator:

NORMAL WATER AREAS – Should be done **ONCE A WEEK**.
BAD WATER AREAS – Should be done **ONCE A DAY**.
NORMAL WATER AREAS WITH MAFD – Should be done **TWICE A MONTH**.
BAD WATER AREAS WITH MAFD – Should be done **ONCE A WEEK**.

NOTE: The best time to Blow Down your generator is after it has been running for some time, while it is still hot.

1. Place **Toggle Switch (#2)** and **Main Disconnect Box** in **OFF** position.
2. Allow pressure to drop between **10** and **20 PSI**.
3. Open **Manual Drain (#19)** slowly, allowing **HOT WATER** and **STEAM** to blow out into the drain, cleaning out the generator.

NOTE: Blow Down your generator at any pressure you feel comfortable with. 10 to 20 PSI is only a recommendation. You may go higher or lower, but higher is always better.

WARNING – **HOT WATER** and **STEAM** under **HIGH PRESSURE** can lift drain pipes right off the ground and cause **SERIOUS INJURY**. Make sure drain pipe is **SECURE** and **CANNOT** move. The drain must be directed into a **HIGH TEMPERATURE** drain (**NO PVC**).

3.2) CLEANING WATER LEVEL PROBES

Water Level Probes are the heart of your generator. Almost all steam generator malfunctions are caused by dirty water level probes. **CLEANING** your **PROBES** is by far the **MOST IMPORTANT** maintenance step to keep your generator running properly. The following is the **LEAST** amount of times recommended to clean your probes:

NORMAL WATER AREAS – Should be done **TWICE A YEAR**.
BAD WATER AREAS – Should be done **3-4 TIMES A YEAR**.

NOTE: The best time to clean your probes is before you turn your generator on, while it is still cool.

1. Place **Toggle Switch (#2)** and **Main Disconnect Box** in **OFF** position.
2. Make sure generator is cool and the **Pressure Gauge (#15)** reads **0 PSI**.
3. Locate the blue box on top of generator and remove cover plate, exposing the **Water Level Probes (#5)**.
4. Use **5/16" Socket** to remove wires from probes.
5. Use **13/16" Spark Plug Socket** to remove probes from chamber.

3.2) CLEANING WATER LEVEL PROBES (Continued)

6. Clean probes to remove rust and scaling.

   NOTE: To clean probes you may use wire wheel, wire brush, steal wool, or Scotch-Brite. (Wire wheel works the best) You may also want to try some sort of chemical like CLR remover or LIME-A-WAY.

7. Reinstall probes assuring each probe's length is assigned to its proper letter.
8. Reconnect wires to probes assuring each color is also assigned to its proper letter.

   NOTE: DO NOT make wires too tight. Just tighten enough to make contact. Over tightening can cause probe plugs to pull apart over time.

9. Reinstall cover plate.

Water Level Probe Specifications:

Letter Assignment on Chamber	A	B	C	D/G
Water Level Probe Length	15"	15 3/8"	13"	15 3/8"
Wire Color Assignment	RED	Not Used	BLACK	GREEN
Assignment on Dual Function Board	LLCO	Not Used	H	G

NOTE: The (B) Probe is not used. It is a spare probe that can be cut and used to replace any one of the other probes.

WARNING – There **MUST be NO PRESSURE** in the chamber when removing probes. If you must change probes while chamber is **HOT**, make sure the steam out and drain valves are open to assure chamber will remain depressurized. **DO NOT** touch probes with your bare hands while **HOT**, and be cautious of escaping steam from probe holes while probes are removed.

3.3) CLEANING OR REPLACING HEATERS

Heaters are located inside the control panel (#1) below the insulation barrier, bolted into the chamber. If (3.5) Chamber Chemical/Acid Treatments are not regularly done, heaters must be taken out at least **ONCE A YEAR**, cleaned with wire brush and reinstalled using a new gasket. If you are replacing or cleaning your heater elements:

1. Place **Toggle Switch (#2)** and **Main Disconnect Box** in **OFF** position.
2. Make sure generator is cool and the **Pressure Gauge (#15)** reads **0 PSI**.
3. Remove heater wires from heater(s), using a **3/8" Socket**.
4. Unbolt and remove heater(s) using a **1 1/16" Socket**.

   NOTE: Heater(s) may be difficult to get out; you may need to use some sort of pry bar to get them loose.

5. Clean heater(s) with wire brush. If replacing, dispose of old heater(s).
6. Reinstall heater(s) with new gasket(s).
7. Attach heater wires assuring proper wiring. *Refer to Heater Wiring Schematics attached*

NOTE: If you are replacing a heater because of a heater failure, you must also clean the probes and clean out the chamber, or you may have another heater failure within 48 hours.

3.4) REPLACING GLASS GAUGE & RUBBER WASHERS OR GLASS PACKINGS

The **Sight Glass (#10)** gives the operator the ability to easily monitor the actual water level inside the chamber. If the **Sight Glass (#10)** gets clogged or is no longer functional, it can be very difficult to troubleshoot a problem.

3.4.1) BRASS SIGHT GLASS (STANDARD)

GLASS GAUGE and **RUBBER WASHERS MUST** be replaced **EVERY SIX MONTHS**

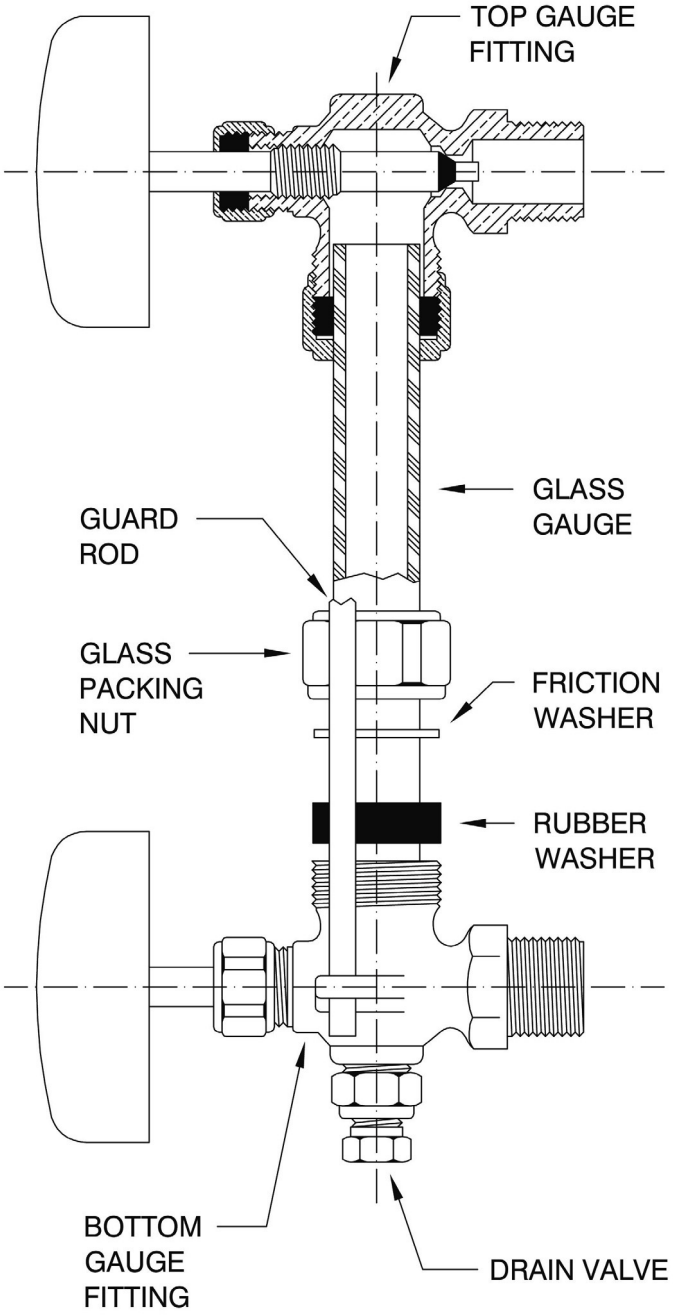

INSTALLATION:

Only properly trained personnel should install and maintain water gauge glass and connections. Remember to wear safety gloves and glasses during installation. Before installing, make sure all parts are free of chips and debris.

1. Uninstall **GUARD RODS**, **GLASS GAUGE**, and **RUBBER WASHERS**. (You may need to rotate one of the **GAUGE FITTINGS** to remove **GLASS GAUGE**)
2. Slip a new **RUBBER WASHER** on the new **GLASS GAUGE** about an inch from the bottom.
3. Now slip the following items through the top of **GLASS GAUGE** in the following order:
   - **FRICTION WASHER**
   - **GLASS PACKING NUT** (facing down)
   - **GLASS PACKING NUT** (facing up)
   - **FRICTION WASHER**
   - **RUBBER WASHER** (inch down from top)
4. Gently insert **GLASS GAUGE** into **GAUGE FITTINGS**. You may need to rotate **GAUGE FITTINGS** until vertically aligned, after **GLASS GAUGE** is in.
5. Carefully raise **GLASS GAUGE** about 1/16” from bottom and slide lower **RUBBER WASHER** down until it makes contact with the **BOTTOM GAUGE FITTING**. (**DO NOT** allow **GLASS GAUGE** to remain in contact with any metal)
6. Carefully slide upper **RUBBER WASHER** up as far as possible.
7. Hand tighten both **GLASS PACKING NUTS**, then tighten 1/2 turn more by wrench. Tighten only enough to prevent leakage. **DO NOT OVER TIGHTEN!** If any leakage should occur, tighten slightly, a quarter turn at a time, checking for leakage after each turn.
8. Reinstall **GUARD RODS**.

3.4) REPLACING GLASS GAUGE & RUBBER WASHERS OR GLASS PACKINGS (Continued)

The **Sight Glass (#10)** gives the operator the ability to easily monitor the actual water level inside the chamber. If the **Sight Glass (#10)** gets clogged or is no longer functional, it can be very difficult to troubleshoot a problem.

3.4.2) BRASS SIGHT GLASS (SEISMIC)

GLASS GAUGE and **GLASS PACKINGS MUST** be replaced **EVERY SIX MONTHS**

The Seismic Sight Glass is equipped with **BALL CHECKS** in each **GAUGE FITTING**.

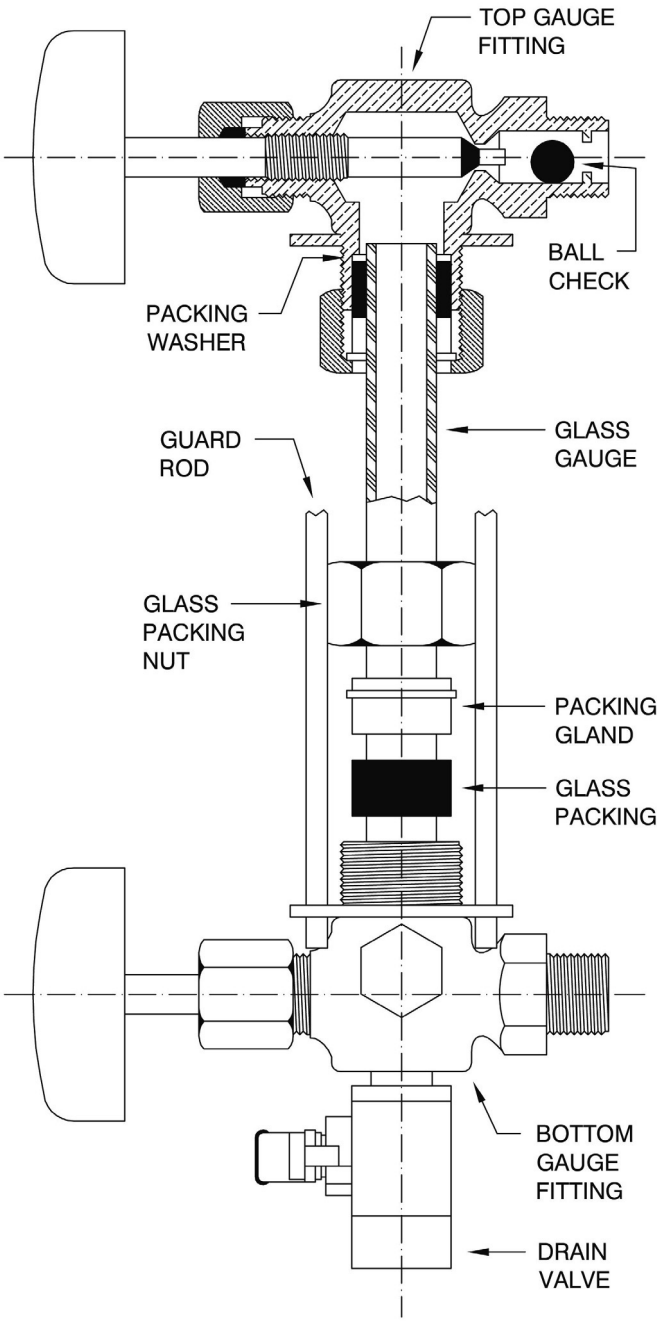

INSTALLATION:

Only properly trained personnel should install and maintain water gauge glass and connections. Remember to wear safety gloves and glasses during installation. Before installing, make sure all parts are free of chips and debris.

1. Uninstall **GUARD RODS**, **GLASS GAUGE**, and **GLASS PACKINGS**. (You may need to rotate one of the **GAUGE FITTINGS** to remove **GLASS GAUGE**)
2. Slip a new **GLASS PACKINGS** on the new **GLASS GAUGE** about an inch from the bottom.
3. Now slip the following items through the top of **GLASS GAUGE** in the following order:
   - **PACKING GLAND** (facing down)
   - **GLASS PACKING NUT** (facing down)
   - **GLASS PACKING NUT** (facing up)
   - **PACKING GLAND** (facing up)
   - **GLASS PACKINGS** (inch down from top)
   - **PACKING WASHER**
4. Gently insert **GLASS GAUGE** into **GAUGE FITTINGS**. You may need to rotate **GAUGE FITTINGS** until vertically aligned, after **GLASS GAUGE** is in.
5. Carefully raise **GLASS GAUGE** about 1/16” from bottom and slide lower **GLASS PACKINGS** down until it makes contact with the **BOTTOM GAUGE FITTING**. (**DO NOT** allow **GLASS GAUGE** to remain in contact with any metal)
6. Carefully slide upper **GLASS PACKINGS** up as far as possible.
7. Hand tighten both **GLASS PACKING NUTS**, then tighten 1/2 turn more by wrench. Tighten only enough to prevent leakage. **DO NOT OVER TIGHTEN!** If any leakage should occur, tighten slightly, a quarter turn at a time, checking for leakage after each turn.
8. Reinstall **GUARD RODS**.

3.5) CHAMBER CHEMICAL/ACID TREATMENT

All Electric Steam Generator should be cleaned regularly. The following is the least amount of times recommended to clean out your chamber:

NORMAL WATER AREAS – Should be done **ONCE A YEAR**.
BAD WATER AREAS – Should be done **TWICE A YEAR**.

If equipped with Motorized Auto-Flush & Drain "MAFD" (#20), locate the **MAFD TIMER/RELAY** in the **Control Panel (#1)** and do steps 1-3 before the chamber treatment and steps 4-5 after chamber treatment is done:

WARNING – Before opening **Control Panel (#1)**, **TO AVOID ELECTRICAL SHOCK**, place **Main Disconnect Box** and the **Toggle Switch (#2)** in the **OFF** position.

BEFORE:

1. Dial **TIME ADJUSTMENT** on **MAFD TIMER/RELAY** all the way down to 15 seconds.
2. Make sure **MAFD (#20)** in the closed position.
3. Disconnect the orange wire from the normally open **(NO)** terminal on the **MAFD TIMER/RELAY**.

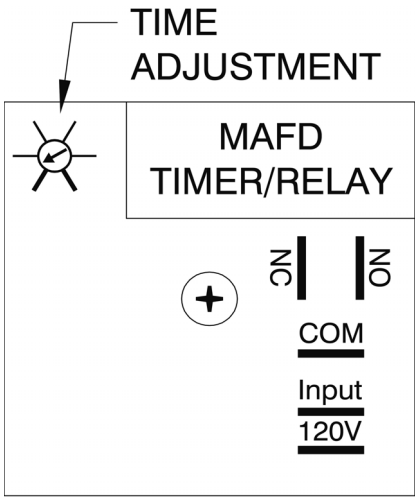

AFTER:

4. Reconnect the orange wire to the normally open **(NO)** terminal on the **MAFD TIMER/RELAY**.
5. Dial **TIME ADJUSTMENT** on **MAFD TIMER/RELAY** up to the desired flush time (Most commonly 3 minutes)

Chamber Treatment Instructions:

1. Turn on generator, allowing pressure to climb to **10** to **20 PSI** on **Pressure Gauge (#15)**, and then shut off.
2. **"Blow Down"** Open **Manual Drain (#19)** slowly, allowing **HOT WATER** and **STEAM** to blow out into the drain.

   NOTE: You may Blow Down your generator at any pressure you feel comfortable with. **10** to **20 PSI** is only a recommendation. You may go higher or lower, but higher is always better.

   WARNING – **HOT WATER** and **STEAM** under **HIGH PRESSURE** can lift drain pipes right off the ground and cause **SERIOUS INJURY**. Make sure drain pipe is **SECURE** and **CANNOT** move. The drain must be directed into a **HIGH TEMPERATURE** drain **(NO PVC).**

3. Remove **Safety Valve (#18)**.

   WARNING – There **MUST** be **NO PRESSURE** in the chamber when removing the **Safety Valve (#18)**, make sure the steam out and drain are open to assure chamber will remain depressurized. Be cautious of escaping steam from chamber while **Safety Valve (#18)** is removed.

3.5) CHAMBER CHEMICAL/ACID TREATMENT (Continued)

4. Close **Manual Drain (#19)** and **Steam Out (#16)**; turn generator on until **Sight Glass (#10)** shows that it is 1/2 full, and then shut off.

5. Insert funnel into coupling, where **Safety Valve (#18)** used to be.

6. Pour **1 Gallon** of hydrochloric acid (inhibited) solution **(NON-FOOD APPLICATIONS)** into funnel very slowly, being careful of fumes and venting while pouring.

NOTE: Solution can be obtained from any industrial chemical dealer.
FOR FOOD APPLICATIONS: Use FDA approved chemicals.

7. Remove funnel, reinstall **Safety Valve (#18)**, and verify **Steam Out (#16)** is closed; let solution set in generator for **1 HOUR.**

8. Turn on generator, allowing pressure to climb to **5 PSI** on **Pressure Gauge (#15)**, and then shut off.

9. Allow the pressure to drop to **0 PSI** on **Pressure Gauge (#15)** naturally. **DO NOT** open **Steam Out (#16)** or **Manual Drain (#19)** until pressure is down.

10. Remove **Safety Valve (#18)**.

11. Reinsert funnel, and fill generator completely to the top with clean water; let stand for an additional **1/2 HOUR**.

NOTE: Turning on the generator will not completely fill it to the top. Filling must be done manually through the safety valve coupling.

12. Open **Manual Drain (#19)** to drain generator.

13. Close **Manual Drain (#19)**; refill generator completely to the top with clean water and open **Manual Drain (#19)** to flush out generator **completely**.

14. Reinstall **Safety Valve (#18)** and close **Manual Drain (#19)**.

15. Turn on generator, allowing pressure to climb to **10** to **20 PSI** on **Pressure Gauge (#15)**, and then shut off.

16. **"Blow Down"** Open **Manual Drain (#19)** slowly, allowing **HOT WATER** and **STEAM** to blow out into the drain.

NOTE: You may Blow Down your generator at any pressure you feel comfortable with. **10** to **20 PSI** is only a recommendation. You may go higher or lower, but higher is always better.

WARNING – **HOT WATER** and **STEAM** under **HIGH PRESSURE** can lift drain pipes right off the ground and cause **SERIOUS INJURY**. Make sure drain pipe is **SECURE** and **CANNOT** move. The drain must be directed into a **HIGH TEMPERATURE** drain **(NO PVC).**

17. Your generator is now **ready for normal use and operation**.

3.6) PRESSURE CONTROL DATA SHEET

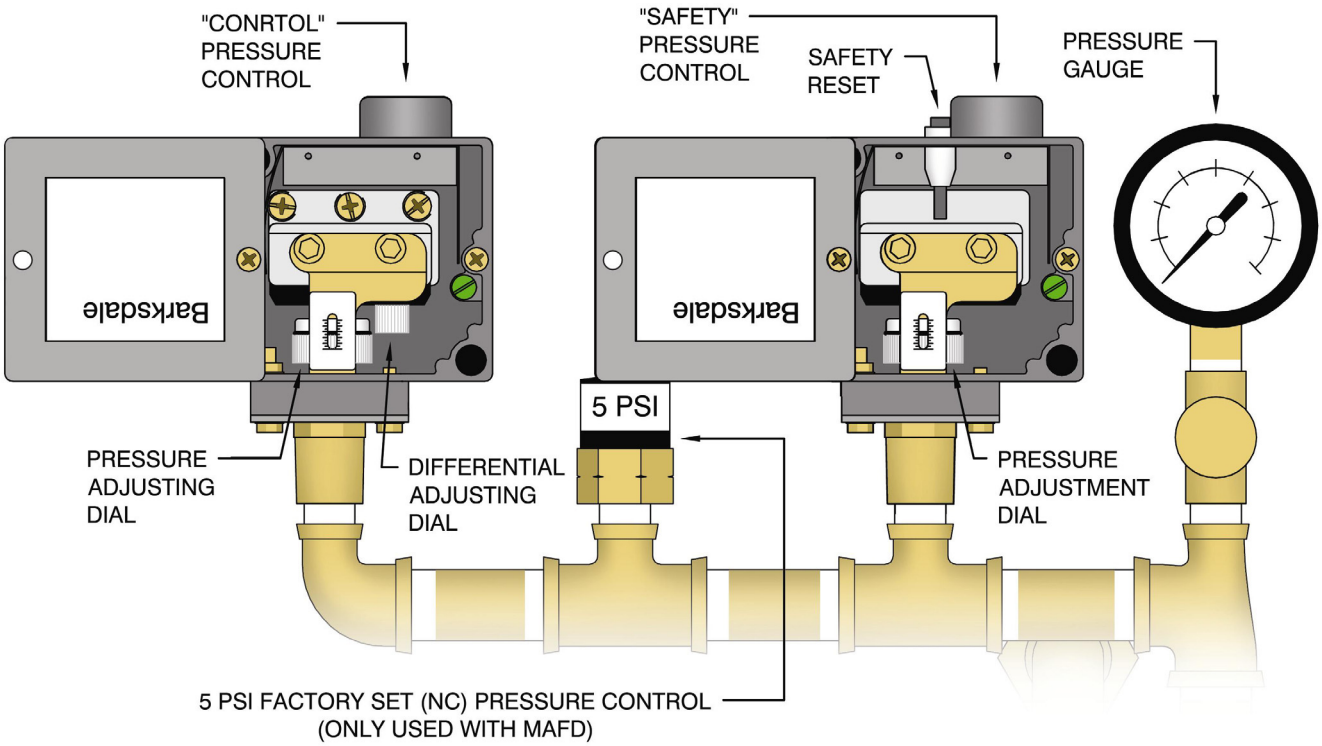

DEFINITIONS:

"CONTROL" PRESSURE CONTROL – This pressure control should be the only one controlling the operating pressure of the generator.

"SAFETY" PRESSURE CONTROL – This pressure control is only used if the "Control" fails. It is always set higher than the "Control"; if the operating pressure is passed, The "Safety" will turn the heaters off.

SAFETY RESET – This reset is tripped when the "Safety" turns the heaters off. It must be manually pushed to turn the heaters back on. This lets the user know there was a problem. If it is tripped, the "Control" most likely failed.

PRESSURE ADJUSTING DIAL – These dials adjust the set pressure at which each pressure control will turn the heaters off.

DIFFERENTIAL ADJUSTING DIAL – This dial is only on the "Control". When the "Control" turns the heaters off, the amount of pressure that is dropped before it turns the heaters back on (the differential) can be adjusted by this dial**.** This dial should never have to be adjusted, unless desired.

PRESSURE GAUGE – This tells the user what pressure is in the chamber. The pressure controls are set to this gauge.

5 PSI PRESSURE CONTROL – (Only used with "MAFD" Motorized Auto-Flush & Drain) this control prevents the MAFD from opening when there is more than 5 pounds off pressure in the generator.

3.7) SETTING THE PRESSURE CONTROLS

SETTING PRESSURE CONTROLS INSTUCTIONS:

WARNING – The pressure controls must be set while all circuits are live. **TO AVOID ELECTRICAL SHOCK**, **DO NOT TOUCH** the wires or the terminals in which they connect while setting the pressure controls.

NOTES:

- Setting the pressure controls greatly relies on your ability to tell whether the contactor(s) are turning the heaters on or off. You should be able to hear the contactor(s), located inside the **Control Box (#1)**, click on and off. Familiarize yourself with this sound.
- The order in which the pressure controls must be set is the **"SAFETY"** and then the **"CONTROL"**.
- In order to set the **"SAFETY"** you must keep the **"CONTROL"** at a higher pressure setting than the **"SAFETY"**
- Once the **"SAFETY"** is set, then you can lower the **"CONTROL"** to its correct setting.
- To **INCREASE** the pressure setting, when looking down on pressure control, using your two index fingers, turn the **PRESSURE ADJUSTMENT DIAL CLOCKWISE**, causing the **BLACK INDICATOR LINE** to move **DOWN** the scale.
- To **DECREASE** the pressure setting, turn the dial **COUNTER CLOCKWISE**, causing the indicator line to move **UP** the scale.

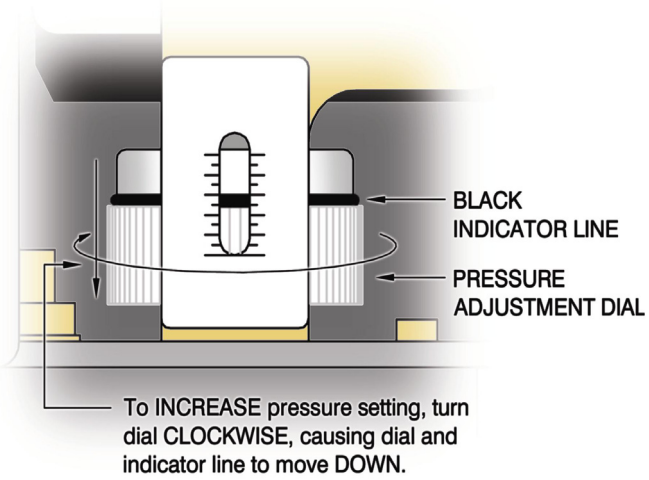

SETTING INSTRUCTIONS:

1. Open the pressure control covers, as shown on previous page.
2. Adjust the **PRESSURE ADJUSTMENT DIAL** on the **"CONTROL"** so that the **BLACK INDICATOR LINE** is somewhere between ½ and ¾ of the way down from the top.
3. Adjust the **PRESSURE ADJUSTMENT DIAL** on the **"SAFETY"** so that the **BLACK INDICATOR LINE** is somewhere between ¼ and ½ of the way down from the top.
4. Close the **Steam Out (#16)** and turn on generator. When the contactor(s) click on, the pressure will rise. If contactor(s) do not click on right away, you may need to press **SAFETY RESET**. Continue to watch the **Pressure Gauge (#15)** until you hear the contactor(s) click off. This may take up to 20 minutes.

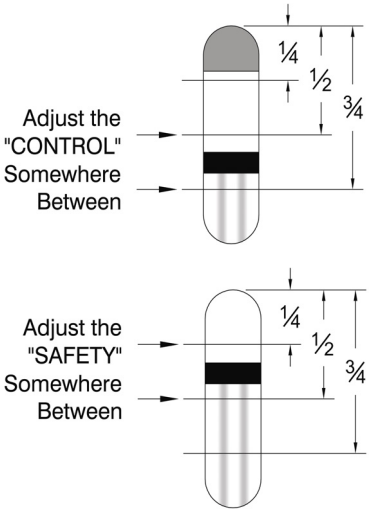

WARNING – DO NOT allow the pressure to exceed the rating on the **Safety Valve (#18)**. If contactor(s) do not turn off before the pressure limit is exceeded, manually shut off generator, open the **Steam Out (#16),** and **DECREASE** the pressure setting on the "**SAFETY**" pressure control. Repeat step #4.

3.7) SETTING THE PRESSURE CONTROLS (Continued)

5. At this point the contactor(s) should be clicked off and you should be able to click them on and then off again by pressing the **SAFETY RESET**. This is a way to test if the "**SAFETY**" is still controlling the pressure, and not the **"CONTROL"**. While setting the "**SAFETY**" and the contactor(s) are off, if the **SAFETY RESET** does not cause the contactor(s) to click on and off again, **INCREASE** the setting on the "**CONTROL**"

WARNING – **DO NOT** allow the pressure to exceed the rating on the **Safety Valve (#18)**. If contactor(s) do not turn off before the pressure limit is exceeded, manually shut off generator, open the **Steam Out (#16),** and **DECREASE** the pressure setting on the "**SAFETY**" pressure control. If you cannot get the "**SAFETY**" to control the pressure, it may need to be replaced.

Pressure Control Settings		
	"Control"	**"Safety"**
High Pressure **(0-100 PSI)**	**80 PSI**	**85 PSI**
High Pressure **(0-30 PSI)**	**25 PSI**	**27 PSI**
Low Pressure **(0-15 PSI)**	**11 PSI**	**13.5 PSI**

6. Open the **Steam Out (#16)** to exhaust some pressure. Continue pressing the **SAFETY RESET** until the contactor(s) click on and remain on. The pressure should eventually begin to rise. If it doesn't, throttle the **Steam Out (#16)** somewhere between closed and open until it does.

7. Pay attention to what the pressure reads when the contactor(s) click off. If the pressure stopped **BELOW** the "**SAFETY PRESSURE SETTING**", then **INCREASE** the pressure setting on the "**SAFETY"**. If the pressure stopped **ABOVE**, then **DECREASE** the pressure setting.

8. Continue to watch the pressure go up and down, while adjusting the "**SAFETY**" and pressing the **SAFETY RESET**, until the pressure stops at the proper "**SAFETY PRESSURE SETTING**".

9. At this point the "**SAFETY**" should be set to the proper "**SAFETY PRESSURE SETTING**", and the "**CONTROL**" should be set somewhere above the "**SAFETY**".

10. Let the pressure drop below the "**OPERATING PRESSURE SETTING**" and then press the **SAFETY RESET**, so that the contactor(s) click on. **DECREASE** the pressure setting on the "**CONTROL**" until the contactor(s) click off.

11. Repeat Step 10 until you no longer need to press the **SAFETY RESET** for the contactor(s) to click on.

12. Continue to watch the pressure go up and down, while adjusting the "**CONTROL**", until the pressure stops at the proper "**OPERATING PRESSURE SETTING**".

13. The Pressure Controls are now set.

NOTE: If at anytime the **SAFETY RESET** needs to be pressed after the pressure controls are set, either one of the controls are bad, the "**SAFETY**" is set too low, or the "**CONTROL**" is set too high.

4.) CALCULATIONS AND DATA SHEETS

4.1) HEATER POWER & VOLTAGE RATINGS

LB 40-60 Model units use **2 Heaters** to meet the required **(KW) POWER** from the customer's specified **INPUT VOLTAGE**. Each heater comes in **3** different **(KW) POWER RATINGS** and **4** different **VOLTAGE RATINGS**.

NOTE: SINGLE PHASE is **NOT** usually **OFFERED** for **40KW+** generators, because of the extra cost to run and build with the higher amp draw requirements. Although not offered, in some special cases single phase 40KW+ generators can be made.

AVAILABLE HEATER RATINGS				
KW	**VOLTAGES**			
20	208	230	480	600
25	208	230	480	600
30	208	230	480	600

POWER RATINGS per MODEL		
MODEL UNIT	**QUAN.**	**KW**
LB-40	2	20
LB-50	2	25
LB-60	2	30

HEATER VOLTAGE RATINGS per INPUT VOLTAGE (VOLTS)														
Input Voltage	**208**	**220**	**230**	**240**	**380**	**400**	**415**	**425**	**440**	**460**	**480**	**550**	**575**	**600**
LB-40	208	230	230	230	208	240	240	240	480	480	480	600	600	600
LB-50	208	230	230	230	208	230	230	230	480	480	480	600	600	600
LB-60	208	230	230	230	208	230	230	230	480	480	480	600	600	600

NOTE: 380-425V heaters are not usually rated for 380-425V. They are usually 208-240V heaters that have been re-stamped 380-425V and jumpered in series.

4.2) TOTAL POWER RATING CALCULATIONS

The **HEATER POWER RATING** and **NUMBER OF HEATERS** are used to calculate the **TOTAL POWER RATING**. Since the **HEATER POWER RATINGS** are in Kilowatts, they must be multiplied by 1000 to convert them to Watts.

$$P_T = P_H x_H$$

DEFINITIONS:

P_T = Total Power Rating

P_H = Heater Power Rating

x_H = Number of Heaters

MODEL UNIT	LB-40	LB-50	LB-60
Heater Power Rating (Watts)	20,000	25,000	30,000
X Number of Heaters	2	2	2
Total Power Rating (Watts)	40,000	50,000	60,000

4.3) AMPERAGE CALCULATIONS

The **INPUT VOLTAGE, PHASE, TOTAL POWER RATING,** and **HEATER VOLTAGE RATING** are used to calculate the amperage.

NOTE: 380-425V heaters are not usually rated for 380-425V. They are usually 208-240V heaters that have been re-stamped 380-425V and jumpered in series.

FORMULAS TO CALCULATE 3 PHASE AMPERAGE	
208-240V & 440-600V	**380-415V (using 208-240V heaters)**
$I = \frac{P_T V_I}{V_H^2 \sqrt{3}}$	$I = \frac{P_T V_I}{(\sqrt{3} V_H)^2 \sqrt{3}}$

DEFINITIONS:

I = Amperage

P_T = Total Power Rating

V_I = Input Voltage

V_H = Heater Voltage Rating

THREE PHASE AMP DRAW CALCULATIONS (AMPS)														
Input Voltage	**208**	**220**	**230**	**240**	**380**	**400**	**415**	**425**	**440**	**460**	**480**	**550**	**575**	**600**
LB-40	111	96	100	105	67.6	58.2	60.4	61.8	44.1	46.1	48.1	35.3	36.9	38.5
LB-50	139	120	126	131	84.5	72.8	75.5	77.3	55.1	57.6	60.1	44.1	46.1	48.1
LB-60	167	144	151	157	101	87.3	90.6	92.8	66.2	69.2	72.2	52.9	55.3	57.7

4.4) ACTUAL POWER RATING CALCULATIONS

Because the **HEATER VOLTAGE RATINGS** only come in 4 different voltages, and there are so many different voltages in the field, the **TOTAL POWER RATING** is only completely accurate if the **VOLTAGE IN** is exactly equal to the **HEATER VOLTAGE RATING**. This means, in most cases, the **TOTAL POWER RATING** is not completely accurate. The **AMERAGE** and **INPUT VOLTAGE** can be used to calculate the **ACTUAL POWER RATING**.

4.4) ACTUAL POWER RATING CALCULATIONS (Continued)

FORMULAS TO CALCULATE ACTUAL POWER RATINGS	
THREE PHASE	SINGLE PHASE
$P_A = I\ V_I \sqrt{3}$	$P_A = I\ V_I$

DEFINITIONS:

I = Amperage

P_A = Actual Power Rating

V_I = Input Voltage

ACTUAL POWER RATING CALCULATIONS (KW)														
Input Voltage	**208**	**220**	**230**	**240**	**380**	**400**	**415**	**425**	**440**	**460**	**480**	**550**	**575**	**600**
LB-40	40	36.6	40	43.6	44.5	40.3	43.4	45.5	33.6	36.7	40	33.6	36.7	40
LB-50	50	45.7	50	54.4	55.6	50.4	54.3	56.9	42	45.9	50	42	45.9	50
LB-60	60	54.9	60	65.3	66.8	60.5	65.1	68.3	50.4	55.1	60	50.4	55.1	60

4.5) STEAM CAPACITY CALCULATIONS

Steam Capacity Calculations are based on the impossible feed water temperature of 212°F.
WARNING – Anything above 140°F will cause damage to water solenoid and pump.

NET STEAM CAPACITY CALCULATIONS				
MODEL UNIT	Feed Water @ **212°F**	Feed Water @ **140°F**, 90% of 212°F	Feed Water @ **100°F**, 80% of 212°F	Feed Water @ **60°F**, 75% of 212°F
LB-40	**138.0** LB/hr **62.6** Kg/hr	**124.2** LB/hr **56.3** Kg/hr	**110.4** LB/hr **50.1** Kg/hr	**103.5** LB/hr **47.0** Kg/hr
LB-50	**173.0** LB/hr **78.5** Kg/hr	**155.7** LB/hr **70.6** Kg/hr	**138.4** LB/hr **62.8** Kg/hr	**129.8** LB/hr **58.9** Kg/hr
LB-60	**207.0** LB/hr **93.9** Kg/hr	**186.3** LB/hr **84.5** Kg/hr	**165.6** LB/hr **75.1** Kg/hr	**155.3** LB/hr **70.4** Kg/hr

PARTS LEGEND - LB 40-60 (L)

1.) Control Box
2.) ON/OFF Switch
3.) Manual Low-Water Reset (MLWR) (Optional)
4.) Dual Function Board w/ Enclosure
5.) Water Level Probes
6.) Water Inlet - 1/2" Y-Strainer
7.) 1/2" Water Solenoid
9.) 1/2" Check Valves
10.) 5/8" x 8" Sight Glass (Seismic Optional)
11.) Water Barrier - 1/2" U-Tube
12.) 0-15 PSI Pressure Controls
13.) Reset on "Safety" Pressure Switch
14.) 1/4" Needle Valve
15.) 0-30 PSI Pressure Gauge
16.) Steam Out - 3/4" Ball Valve
17.) 1/2" Vacuum Relief Valve
18.) Safety Relief Valve
19.) Manual Drain - 1" Ball Valve

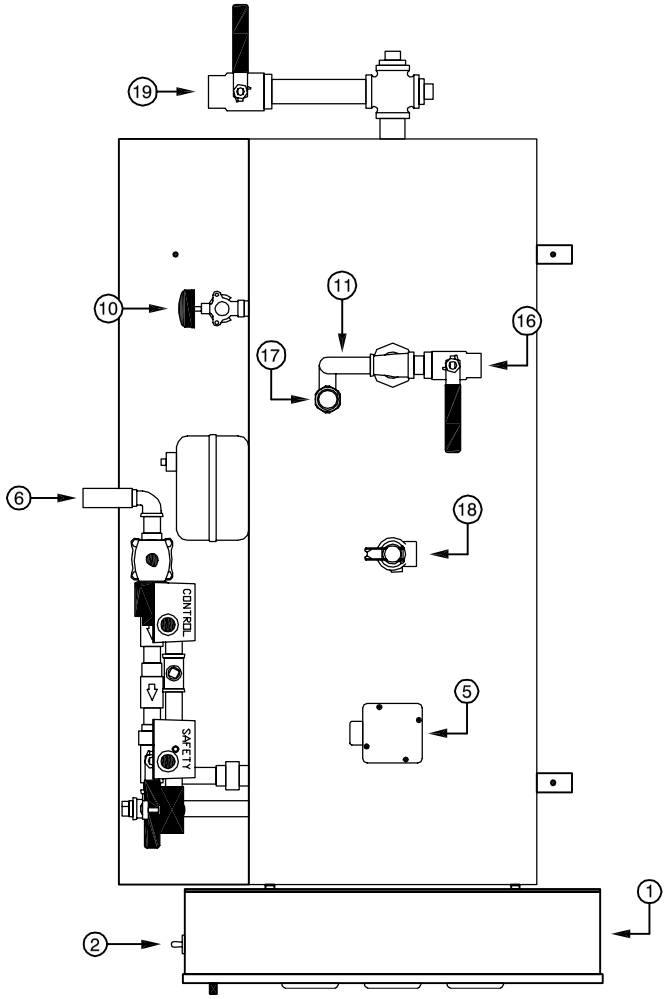

TOP VIEW

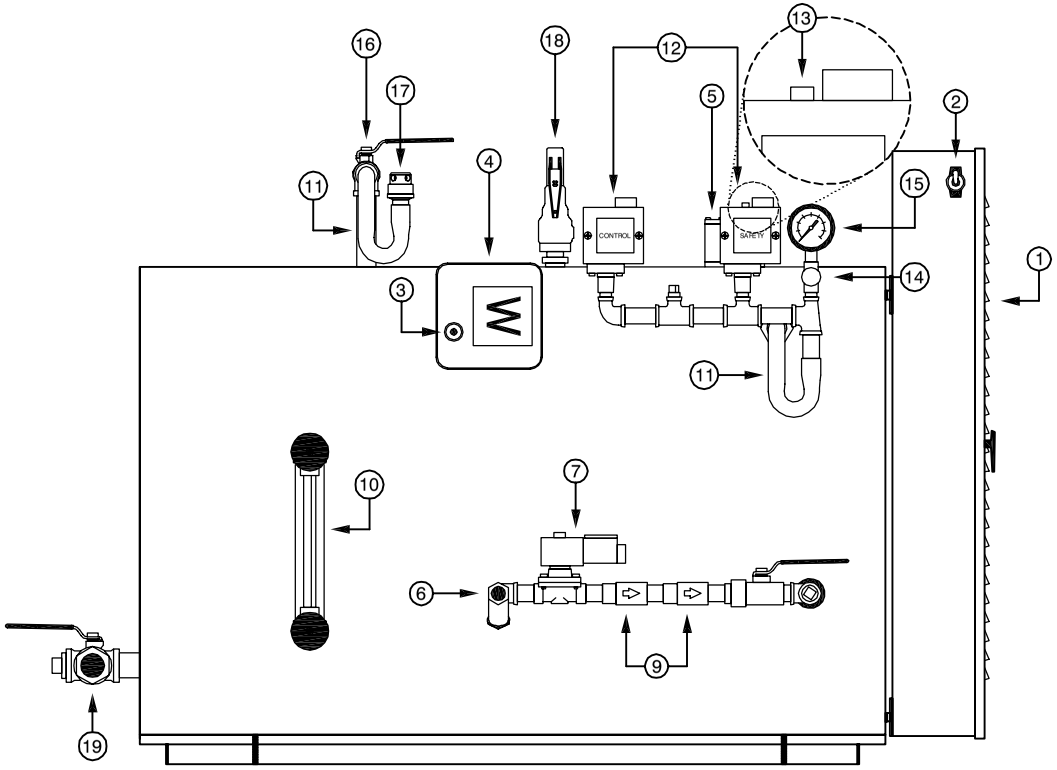

SIDE VIEW

This drawing and all information therein are the property of Electro-Steam Generator Corp. and shall not be disclosed, in whole or in part, to any third party without prior permission of Electro-Steam Generator Corp.

DRAWING TITLE: (PARTS LEGEND) LB 40-60 (L)		MODEL UNIT: LB 40-60		ELECTRO-STEAM GENERATOR CORP. 50 Indel Ave. P.O. Rancocas, NJ 08073-0438
DECRIPTIONS:	DRAWN BY:	CHRISTOPHER FERRARA	12-30-09	
LOW PRESSURE	CHECKED:	CHRISTOPHER FERRARA	12-30-09	
-	ENGINEER:	-	-	DWG NO.: 311-040-060-000100 / SCALE: N/A
-	APPROVED:	SAL NEGRO	12-30-09	SHEET: 1 OF 1

PARTS LEGEND - LB 40-60 (L)(MAFD)

1.) Control Box
2.) ON/OFF Switch
3.) Manual Low-Water Reset (MLWR) (Optional)
4.) Dual Function Board w/ Enclosure
5.) Water Level Probes
6.) Water Inlet - 1/2" Y-Strainer
7.) 1/2" Water Solenoid
9.) 1/2" Check Valves
10.) 5/8" x 8" Sight Glass (Seismic Optional)
11.) Water Barrier - 1/2" U-Tube
12.) 0-15 PSI Pressure Controls
13.) Reset on "Safety" Pressure Switch
14.) 1/4" Needle Valve
15.) 0-30 PSI Pressure Gauge
16.) Steam Out - 3/4" Ball Valve
17.) 1/2" Vacuum Relief Valve
18.) Safety Relief Valve
19.) Manual Drain - 1" Ball Valve
20.) Motorized Auto-Flush & Drain (MAFD) (1" Connection)
21.) 5 PSI (NC) Pressure Switch for (MAFD)

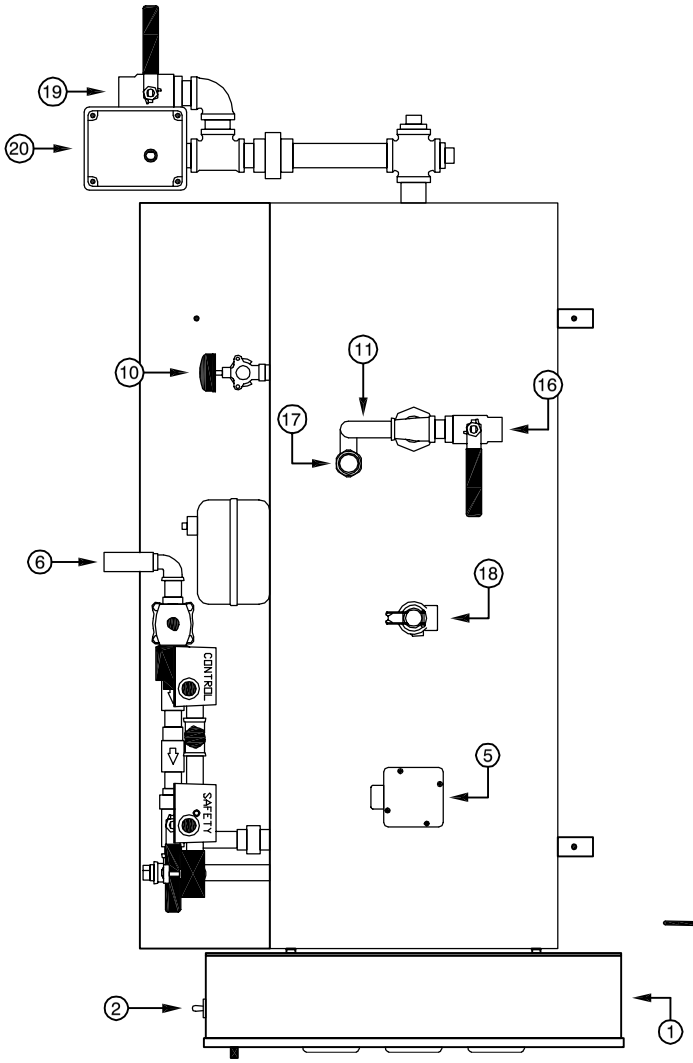

TOP VIEW

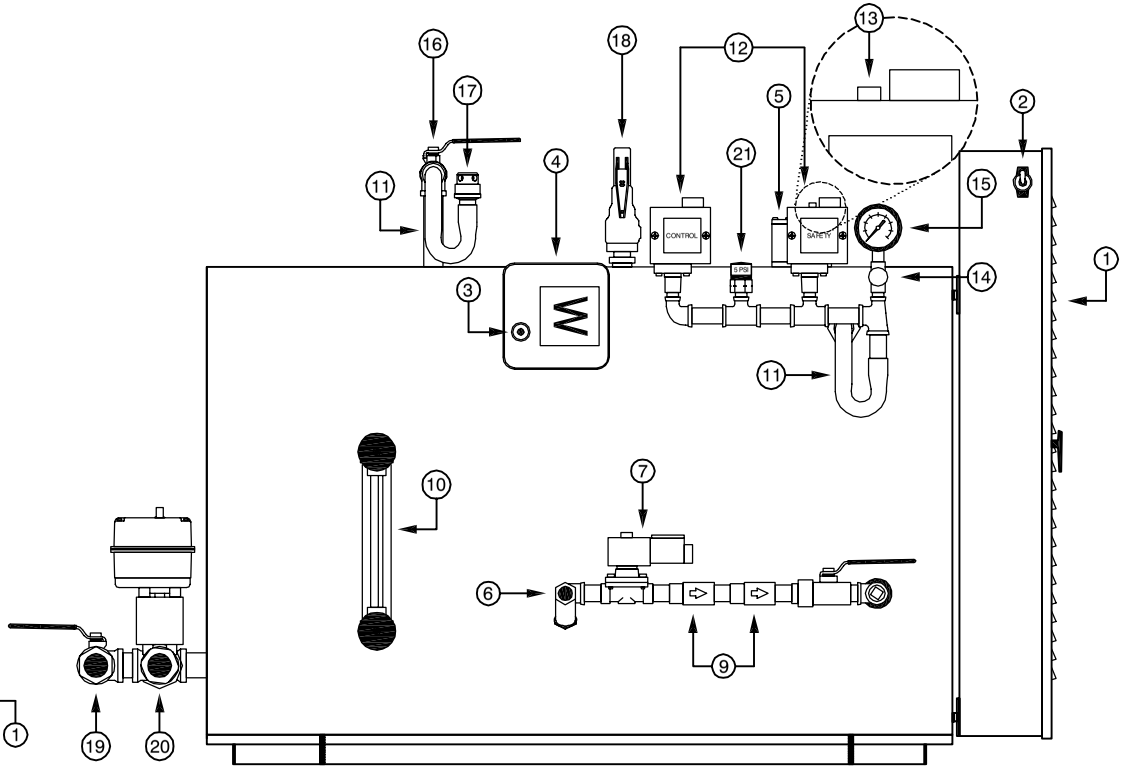

SIDE VIEW

This drawing and all information therein are the property of Electro-Steam Generator Corp. and shall not be disclosed, in whole or in part, to any third party without prior permission of Electro-Steam Generator Corp.

DRAWING TITLE: (PARTS LEGEND) LB 40-60 (L)(MAFD)		MODEL UNIT: LB 40-60		ELECTRO-STEAM GENERATOR CORP. 50 Indel Ave. P.O. Rancocas, NJ 08073-0438
DECRIPTIONS:	DRAWN BY:	CHRISTOPHER FERRARA	12-30-09	
LOW PRESSURE	CHECKED:	CHRISTOPHER FERRARA	12-30-09	
MOTORIZED AUTO-FLUSH & DRAIN	ENGINEER:	-	-	DWG NO.: 311-040-060-000110 / SCALE: N/A
-	APPROVED:	SAL NEGRO	12-30-09	SHEET: 1 OF 1

PARTS LEGEND - LB 40-60 (H)

1.) Control Box
2.) ON/OFF Switch
3.) Manual Low-Water Reset (MLWR) (Optional)
4.) Dual Function Board w/ Enclosure
5.) Water Level Probes
6.) Water Inlet - 1/2" Y-Strainer
7.) 1/2" Water Solenoid
8.) 1/3 HP Pump & Motor
9.) 1/2" Check Valves
10.) 5/8" x 8" Sight Glass (Seismic Optional)
11.) Water Barrier - 1/2" U-Tube
12.) 0-90 PSI Pressure Controls
13.) Reset on "Safety" Pressure Switch
14.) 1/4" Needle Valve
15.) 0-160 PSI Pressure Gauge
16.) Steam Out - 3/4" Ball Valve
17.) 1/2" Vacuum Relief Valve
18.) Safety Relief Valve
19.) Manual Drain - 1" Ball Valve

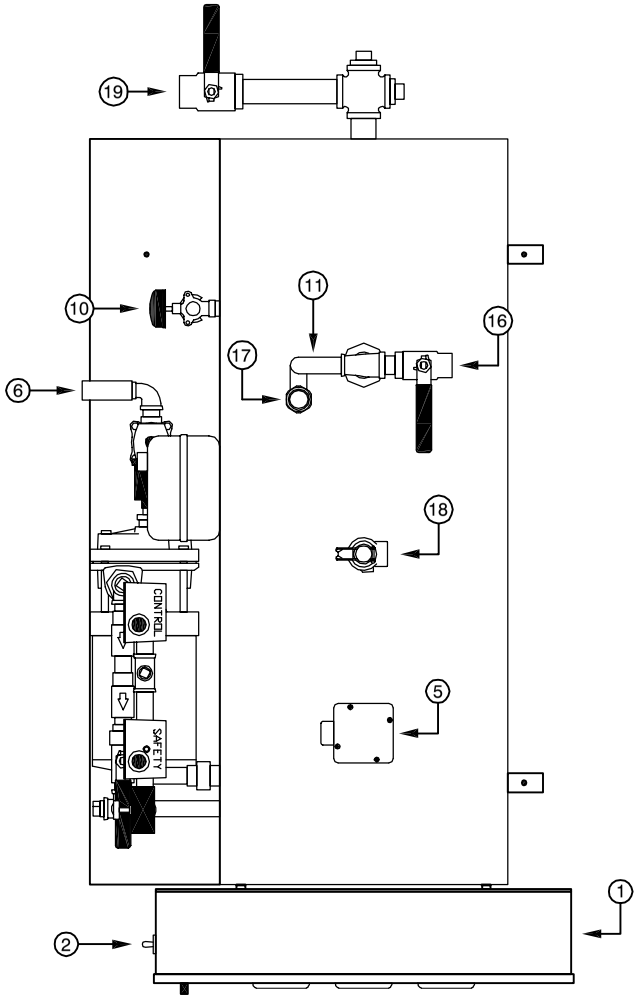

TOP VIEW

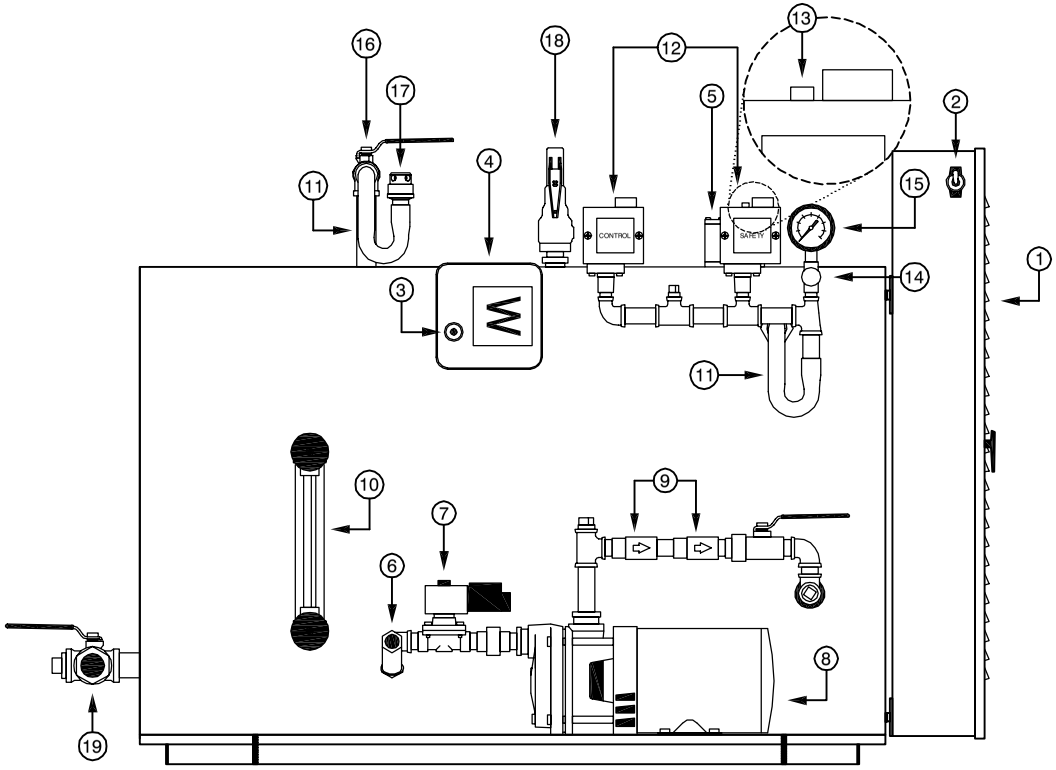

SIDE VIEW

This drawing and all information therein are the property of Electro-Steam Generator Corp. and shall not be disclosed, in whole or in part, to any third party without prior permission of Electro-Steam Generator Corp.

DRAWING TITLE: (PARTS LEGEND) LB 40-60 (H)		MODEL UNIT: LB 40-60		ELECTRO-STEAM GENERATOR CORP. 50 Indel Ave. P.O. Rancocas, NJ 08073-0438
DECRIPTIONS:	DRAWN BY:	CHRISTOPHER FERRARA	12-30-09	
HIGH PRESSURE	CHECKED:	CHRISTOPHER FERRARA	12-30-09	
-	ENGINEER:	-	-	DWG NO.: 311-040-060-000200 / SCALE: N/A
-	APPROVED:	SAL NEGRO	12-30-09	SHEET: 1 OF 1

PARTS LEGEND - LB 40-60 (H)(MAFD)

1.) Control Box
2.) ON/OFF Switch
3.) Manual Low-Water Reset (MLWR) (Optional)
4.) Dual Function Board w/ Enclosure
5.) Water Level Probes
6.) Water Inlet - 1/2" Y-Strainer
7.) 1/2" Water Solenoid
8.) 1/3 HP Pump & Motor
9.) 1/2" Check Valves
10.) 5/8" x 8" Sight Glass (Seismic Optional)
11.) Water Barrier - 1/2" U-Tube
12.) 0-90 PSI Pressure Controls
13.) Reset on "Safety" Pressure Switch
14.) 1/4" Needle Valve
15.) 0-160 PSI Pressure Gauge
16.) Steam Out - 3/4" Ball Valve
17.) 1/2" Vacuum Relief Valve
18.) Safety Relief Valve
19.) Manual Drain - 1" Ball Valve
20.) Motorized Auto-Flush & Drain (MAFD) (1" Connection)
21.) 5 PSI (NC) Pressure Switch for (MAFD)

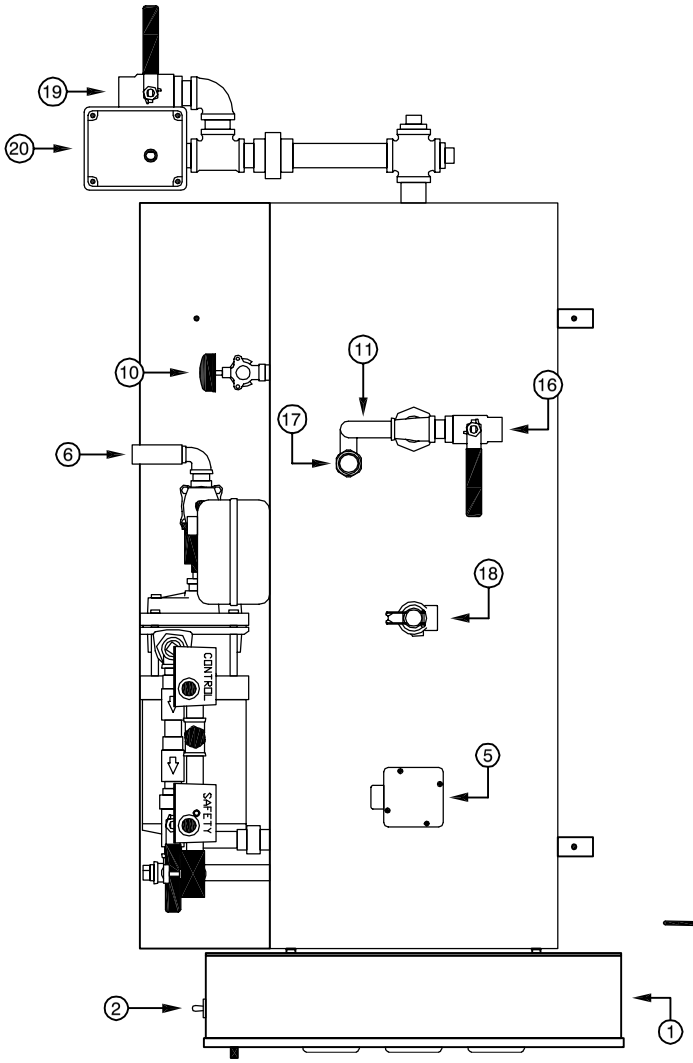

TOP VIEW

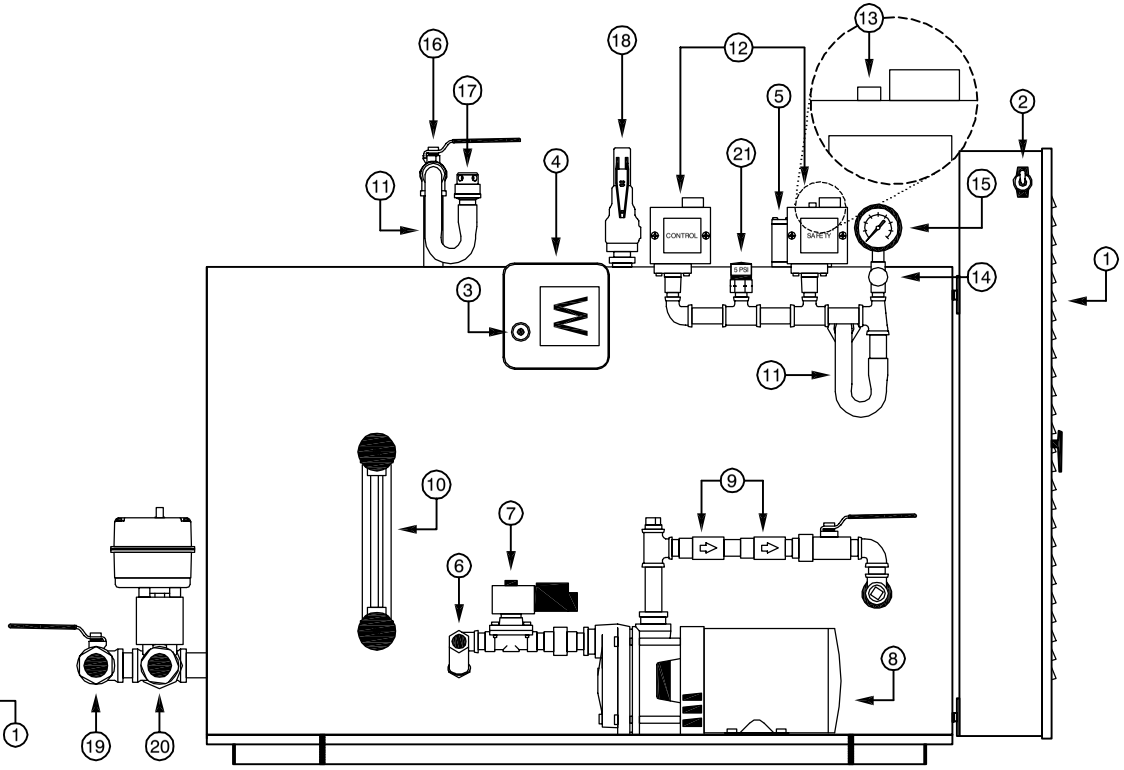

SIDE VIEW

This drawing and all information therein are the property of Electro-Steam Generator Corp. and shall not be disclosed, in whole or in part, to any third party without prior permission of Electro-Steam Generator Corp.

DRAWING TITLE: (PARTS LEGEND) LB 40-60 (H)(MAFD)		MODEL UNIT: LB 40-60		ELECTRO-STEAM GENERATOR CORP. 50 Indel Ave. P.O. Rancocas, NJ 08073-0438
DECRIPTIONS:	DRAWN BY:	CHRISTOPHER FERRARA	12-30-09	
HIGH PRESSURE	CHECKED:	CHRISTOPHER FERRARA	12-30-09	
MOTORIZED AUTO-FLUSH & DRAIN	ENGINEER:	-	-	DWG NO.: 311-040-060-000210 / SCALE: N/A
-	APPROVED:	SAL NEGRO	12-30-09	SHEET: 1 OF 1

INSTALLATION DATA - LB 40-60 (L)

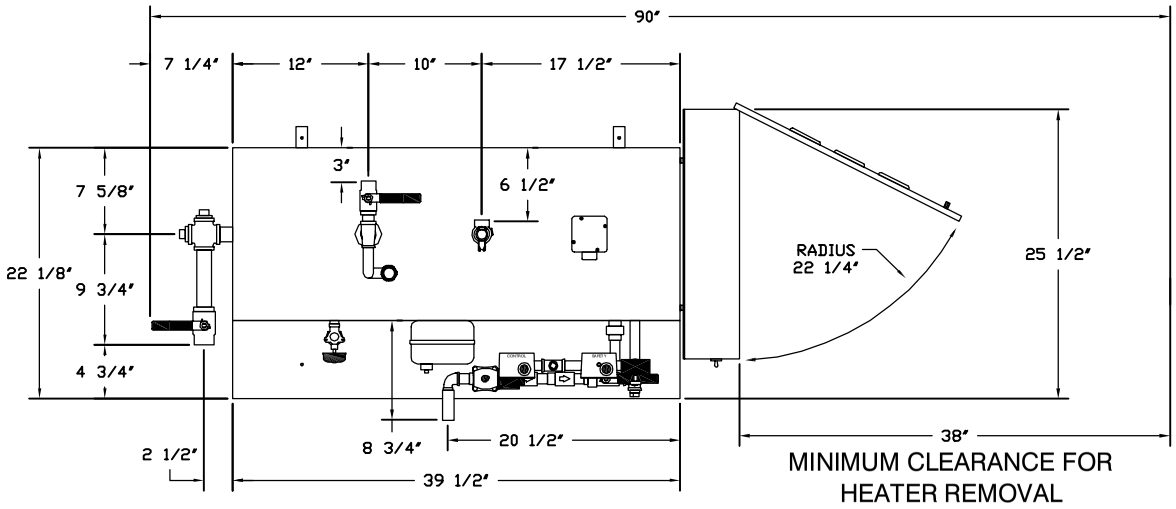

TOP VIEW

NOTES:

1. CONTRACTOR TO PROVIDE MINIMUM 8" CLEARANCE AROUND UNIT FOR SERVICE
2. WEIGHT OF UNIT: 450 LBS = LIVE LOAD

SEISMIC DATA AND CALCULATIONS

SHEAR LOAD GRADE 5 1/4" BOLT 2280 PSI

SEISMIC LOAD (0.50)(450) = 225 LBS

MAXIMUM SHEAR LOAD ON ONE BOLT
225/4 = 56.25 PSI

FORMULA LATERAL FORCE
$F_p = C_p W_p$

VERTICAL Cp FULL LOAD = 1

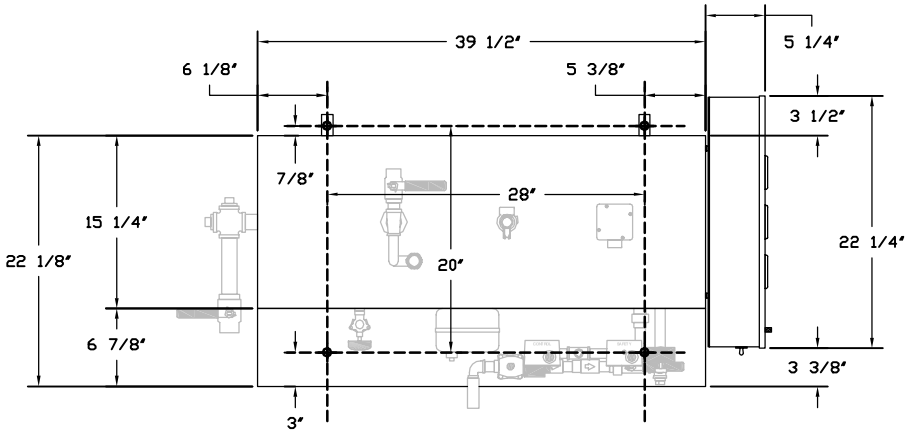

TOP VIEW - BOLT DOWN PATTERN

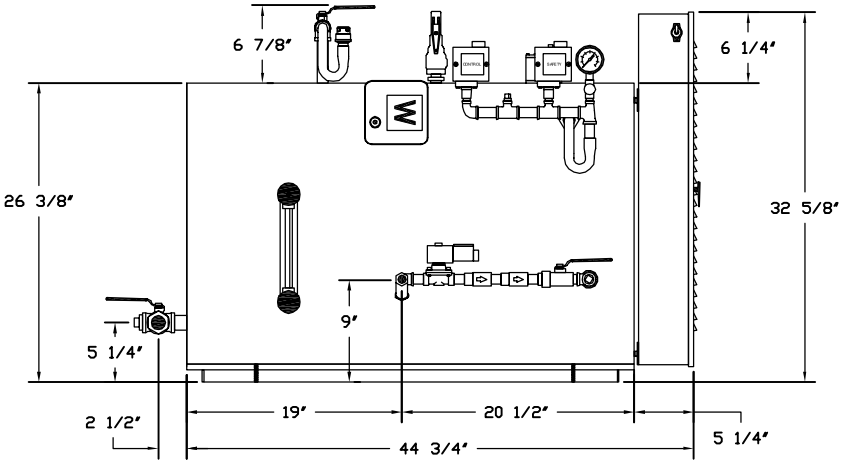

SIDE VIEW

This drawing and all information therein are the property of Electro-Steam Generator Corp. and shall not be disclosed, in whole or in part, to any third party without prior permission of Electro-Steam Generator Corp.

DRAWING TITLE: (INSTALLATION DATA) LB 40-60 (L)		MODEL UNIT: LB 40-60		ELECTRO-STEAM GENERATOR CORP. 50 Indel Ave. P.O. Rancocas, NJ 08073-0438	
DECRIPTIONS:	DRAWN BY:	CHRISTOPHER FERRARA	12-30-09		
LOW PRESSURE	CHECKED:	CHRISTOPHER FERRARA	12-30-09		
-	ENGINEER:	-	-	DWG NO.: 411-040-060-000100	SCALE: N/A
-	APPROVED:	SAL NEGRO	12-30-09		SHEET: 1 OF 1

INSTALLATION DATA - LB 40-60 (L)(MAFD)

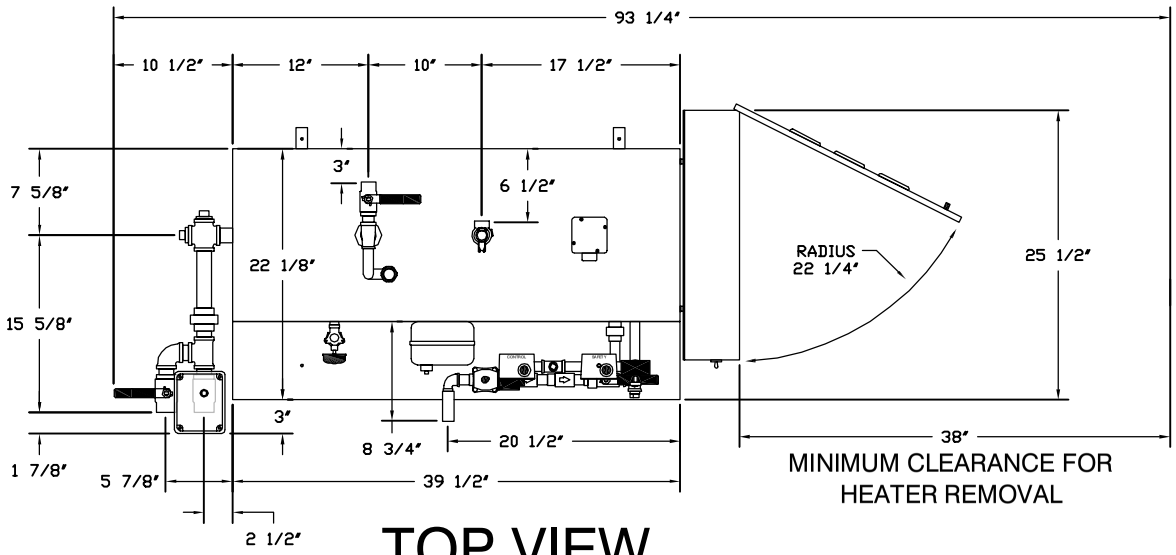

TOP VIEW

NOTES:

1. CONTRACTOR TO PROVIDE MINIMUM 8" CLEARANCE AROUND UNIT FOR SERVICE
2. WEIGHT OF UNIT: 450 LBS = LIVE LOAD

SEISMIC DATA AND CALCULATIONS

SHEAR LOAD GRADE 5 1/4" BOLT 2280 PSI

SEISMIC LOAD (0.50)(450) = 225 LBS

MAXIMUM SHEAR LOAD ON ONE BOLT
225/4 = 56.25 PSI

FORMULA LATERAL FORCE
$F_p = C_p W_p$

VERTICAL Cp FULL LOAD = 1

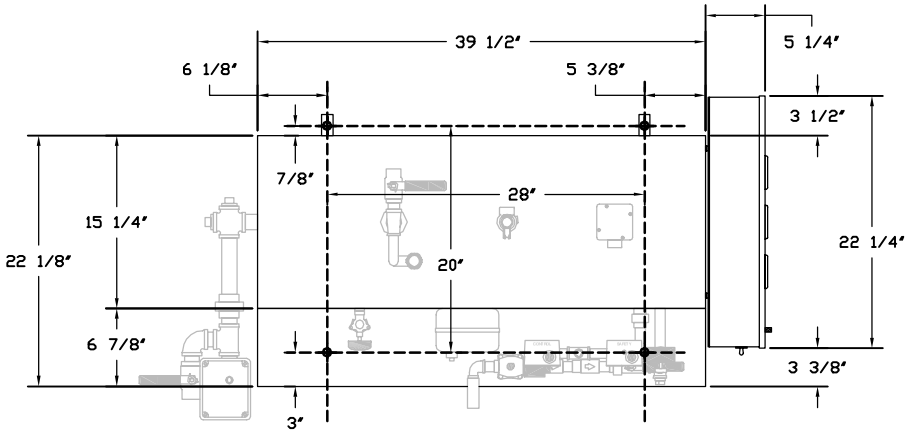

TOP VIEW - BOLT DOWN PATTERN

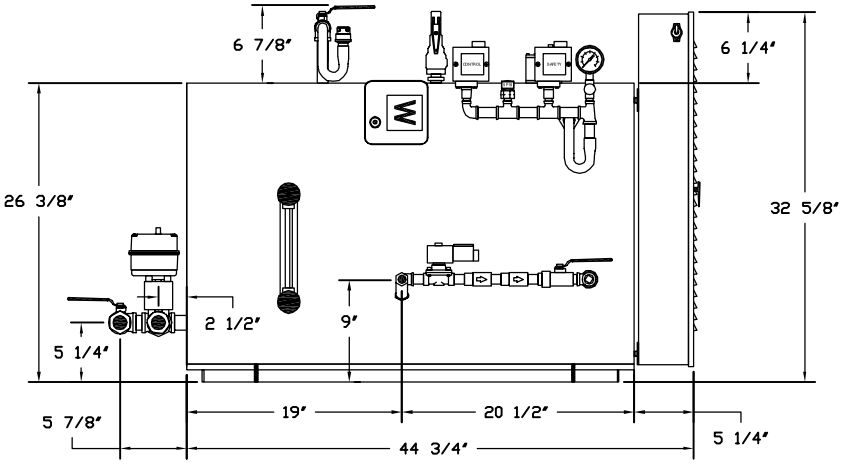

SIDE VIEW

This drawing and all information therein are the property of Electro-Steam Generator Corp. and shall not be disclosed, in whole or in part, to any third party without prior permission of Electro-Steam Generator Corp.

DRAWING TITLE: (INSTALL DATA) LB 40-60 (L)(MAFD)		MODEL UNIT: LB 40-60		ELECTRO-STEAM GENERATOR CORP. 50 Indel Ave. P.O. Rancocas, NJ 08073-0438	
DECRIPTIONS:	DRAWN BY:	CHRISTOPHER FERRARA	12-30-09		
LOW PRESSURE	CHECKED:	CHRISTOPHER FERRARA	12-30-09		
MOTORIZED AUTO-FLUSH & DRAIN	ENGINEER:	-	-	DWG NO.: 411-040-060-000110	SCALE: N/A
-	APPROVED:	SAL NEGRO	12-30-09		SHEET: 1 OF 1

INSTALLATION DATA - LB 40-60 (H)

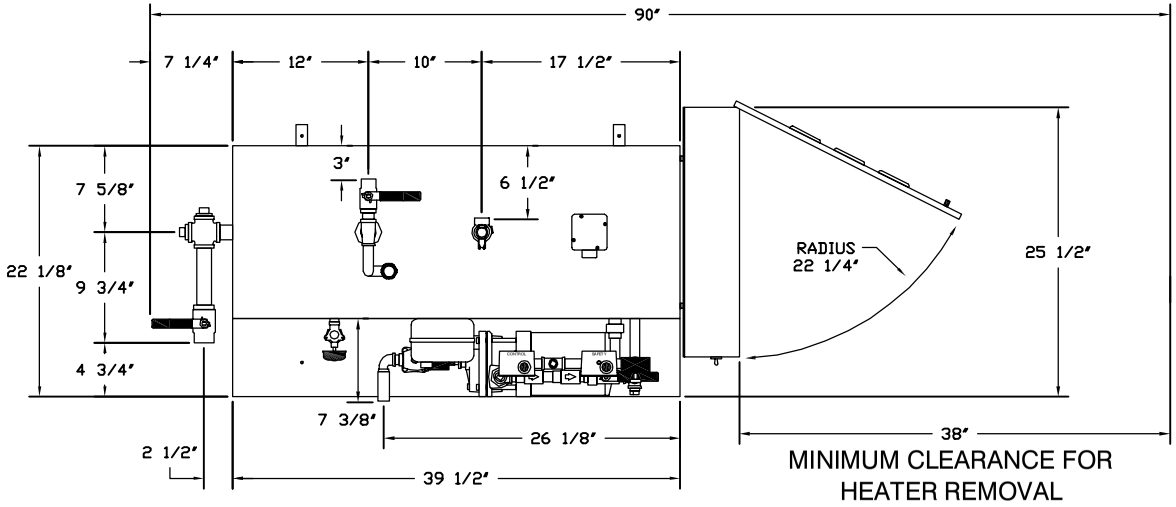

TOP VIEW

NOTES:

1. CONTRACTOR TO PROVIDE MINIMUM 8" CLEARANCE AROUND UNIT FOR SERVICE
2. WEIGHT OF UNIT: 450 LBS = LIVE LOAD

SEISMIC DATA AND CALCULATIONS

SHEAR LOAD GRADE 5 1/4" BOLT 2280 PSI

SEISMIC LOAD (0.50)(450) = 225 LBS

MAXIMUM SHEAR LOAD ON ONE BOLT
225/4 = 56.25 PSI

FORMULA LATERAL FORCE
$F_p = C_p W_p$

VERTICAL Cp FULL LOAD = 1

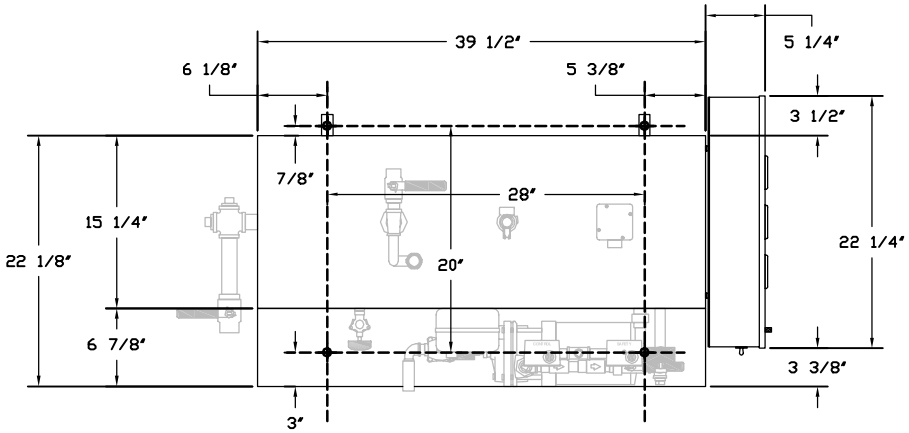

TOP VIEW - BOLT DOWN PATTERN

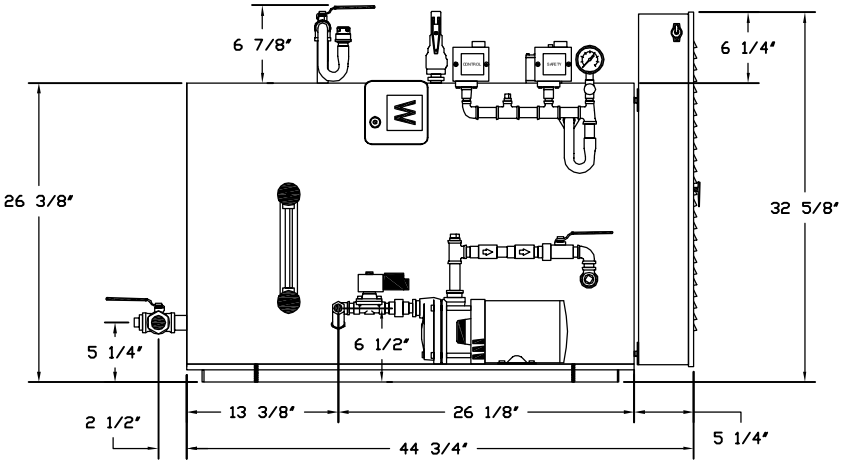

SIDE VIEW

This drawing and all information therein are the property of Electro-Steam Generator Corp. and shall not be disclosed, in whole or in part, to any third party without prior permission of Electro-Steam Generator Corp.

DRAWING TITLE: (INSTALLATION DATA) LB 40-60 (H)		MODEL UNIT: LB 40-60		ELECTRO-STEAM GENERATOR CORP. 50 Indel Ave. P.O. Rancocas, NJ 08073-0438	
DECRIPTIONS:	DRAWN BY:	CHRISTOPHER FERRARA	12-30-09		
HIGH PRESSURE	CHECKED:	CHRISTOPHER FERRARA	12-30-09		
-	ENGINEER:	-	-	DWG NO.: 411-040-060-000200	SCALE: N/A
-	APPROVED:	SAL NEGRO	12-30-09		SHEET: 1 OF 1

INSTALLATION DATA - LB 40-60 (H)(MAFD)

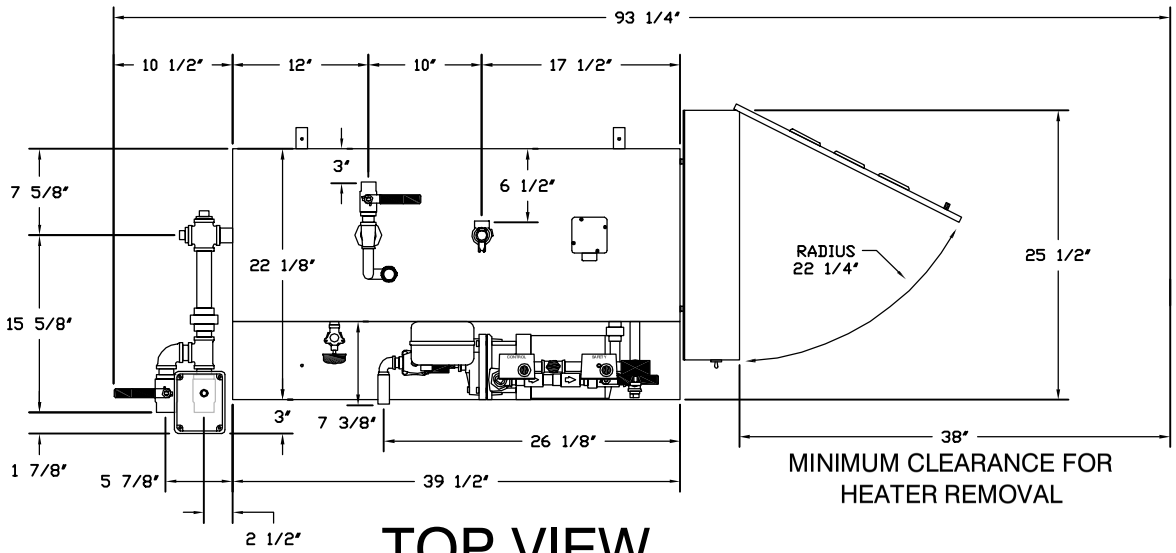

TOP VIEW

NOTES:

1. CONTRACTOR TO PROVIDE MINIMUM 8" CLEARANCE AROUND UNIT FOR SERVICE
2. WEIGHT OF UNIT: 450 LBS = LIVE LOAD

SEISMIC DATA AND CALCULATIONS

SHEAR LOAD GRADE 5 1/4" BOLT 2280 PSI

SEISMIC LOAD (0.50)(450) = 225 LBS

MAXIMUM SHEAR LOAD ON ONE BOLT
225/4 = 56.25 PSI

FORMULA LATERAL FORCE
$F_p = C_p W_p$

VERTICAL Cp FULL LOAD = 1

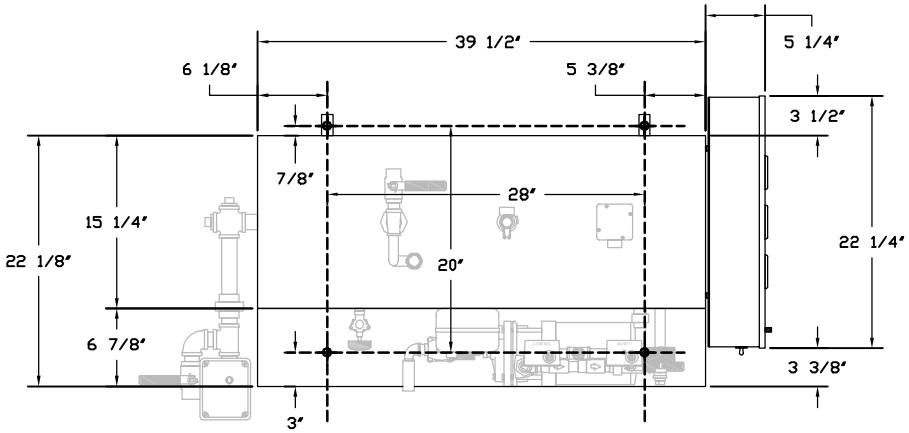

TOP VIEW - BOLT DOWN PATTERN

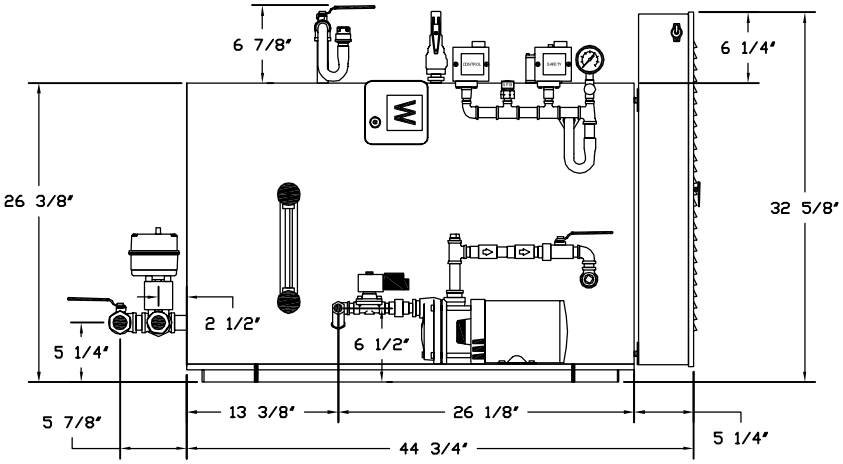

SIDE VIEW

This drawing and all information therein are the property of Electro-Steam Generator Corp. and shall not be disclosed, in whole or in part, to any third party without prior permission of Electro-Steam Generator Corp.

DRAWING TITLE: (INSTALL DATA) LB 40-60 (H)(MAFD)		MODEL UNIT: LB 40-60	ELECTRO-STEAM GENERATOR CORP. 50 Indel Ave. P.O. Rancocas, NJ 08073-0438
DECRIPTIONS:	DRAWN BY:	CHRISTOPHER FERRARA	12-30-09
HIGH PRESSURE	CHECKED:	CHRISTOPHER FERRARA	12-30-09
MOTORIZED AUTO-FLUSH & DRAIN	ENGINEER:	-	-
-	APPROVED:	SAL NEGRO	12-30-09

DWG NO.: 411-040-060-000210 | SCALE: N/A | SHEET: 1 OF 1

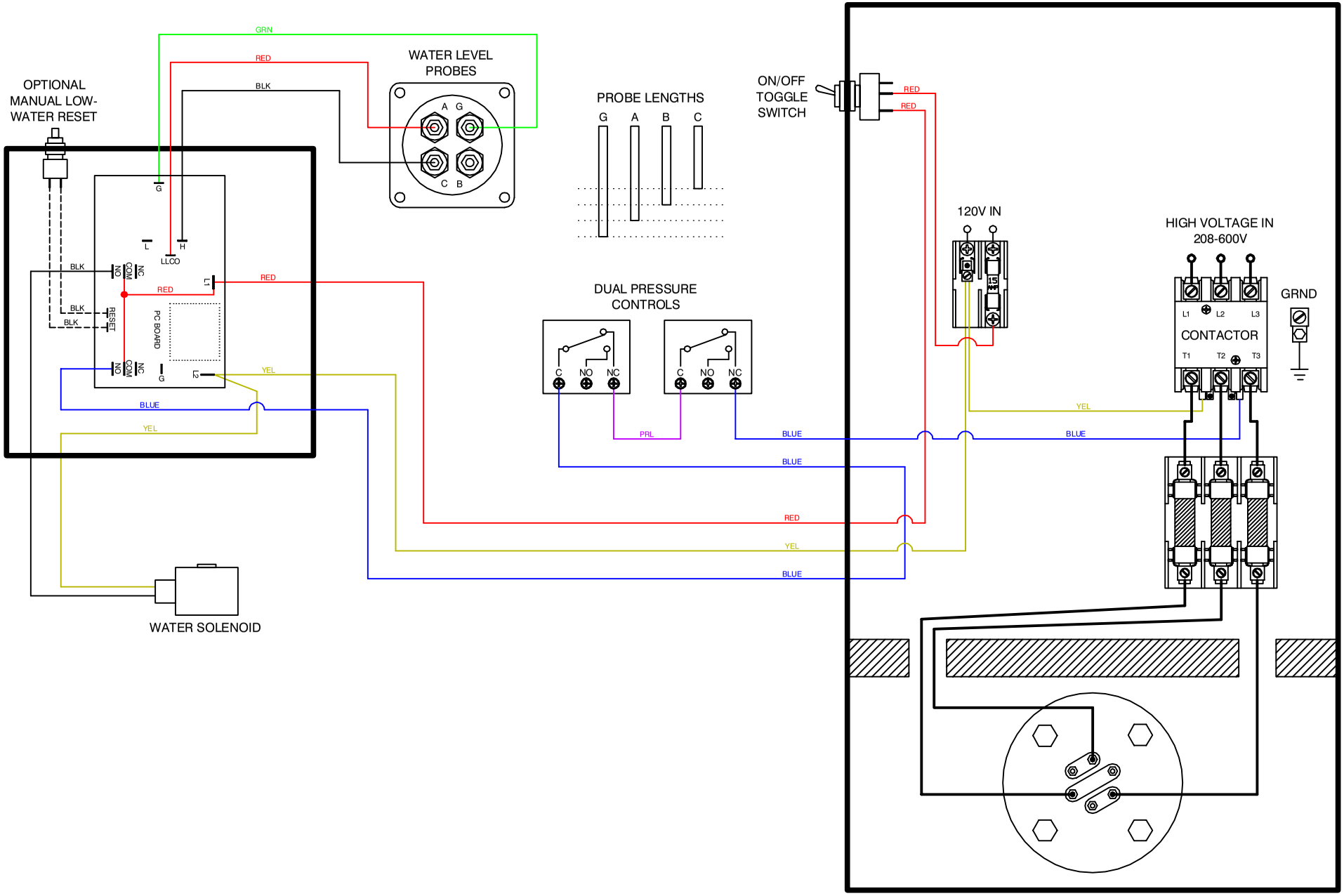

This drawing and all information therein are the property of Electro-Steam Generator Corp. and shall not be disclosed, in whole or in part, to any third party without prior permission of Electro-Steam Generator Corp.

DRAWING TITLE: LB (L)		MODEL UNIT: LB 10-240		ELECTRO-STEAM GENERATOR CORP. 50 Indel Ave. P.O. Rancocas, NJ 08073-0438
DECRIPTIONS:	DRAWN BY:	CHRISTOPHER FERRARA	12-30-09	
LOW PRESSURE	CHECKED:	CHRISTOPHER FERRARA	12-30-09	
-	ENGINEER:	-	-	DWG NO.: 111-010-240-111100 / SCALE: N/A
-	APPROVED:	SAL NEGRO	12-30-09	SHEET: 1 OF 1

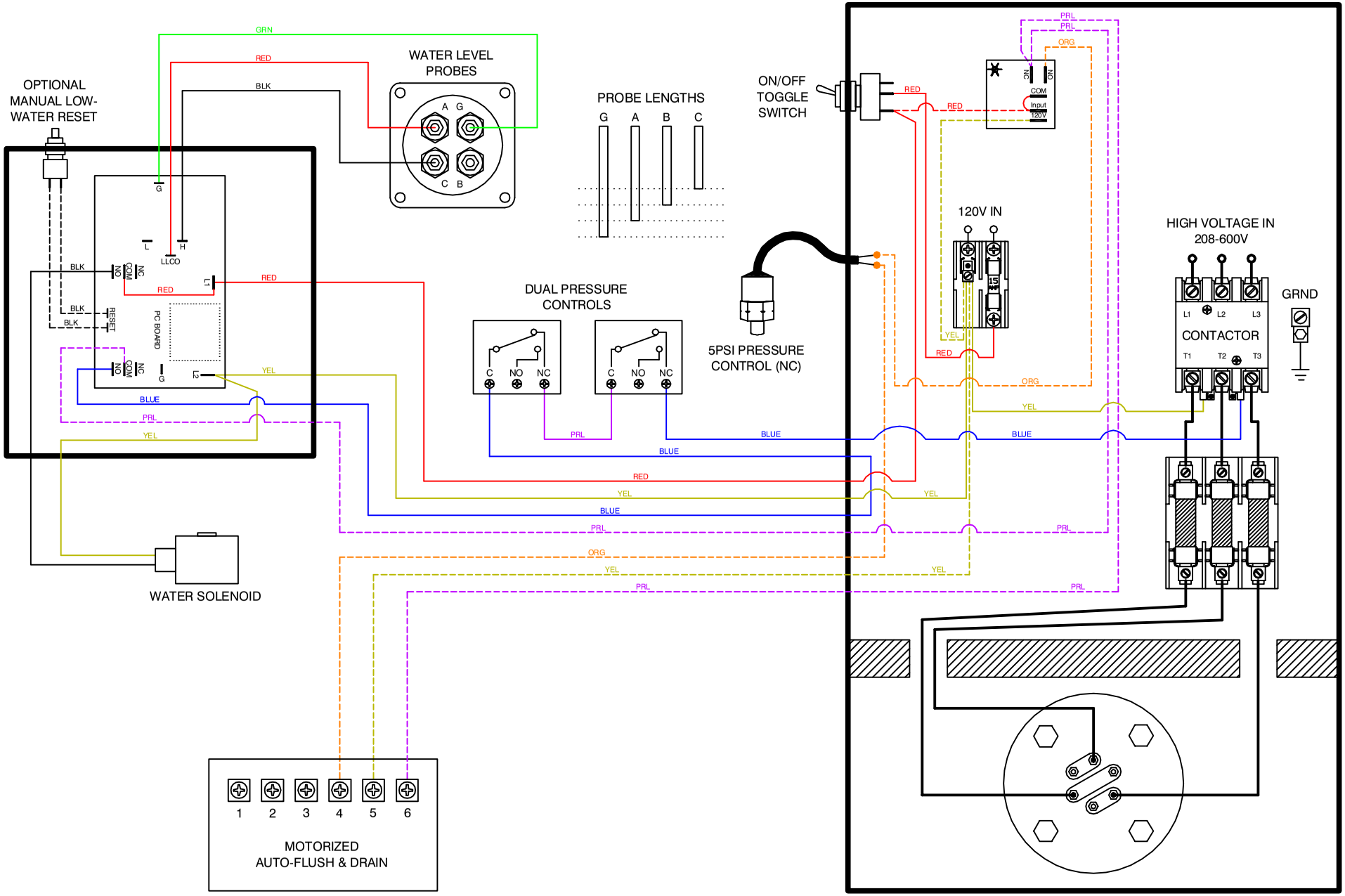

This drawing and all information therein are the property of Electro-Steam Generator Corp. and shall not be disclosed, in whole or in part, to any third party without prior permission of Electro-Steam Generator Corp.

DRAWING TITLE: LB (L)(MAFD)		MODEL UNIT: LB 10-240		ELECTRO-STEAM GENERATOR CORP. 50 Indel Ave. P.O. Rancocas, NJ 08073-0438
DECRIPTIONS:	DRAWN BY:	CHRISTOPHER FERRARA	12-30-09	
LOW PRESSURE	CHECKED:	CHRISTOPHER FERRARA	12-30-09	
MOTORIZED AUTO-FLUSH & DRAIN	ENGINEER:	-	-	DWG NO.: 111-010-240-111110 / SCALE: N/A
-	APPROVED:	SAL NEGRO	12-30-09	SHEET: 1 OF 1

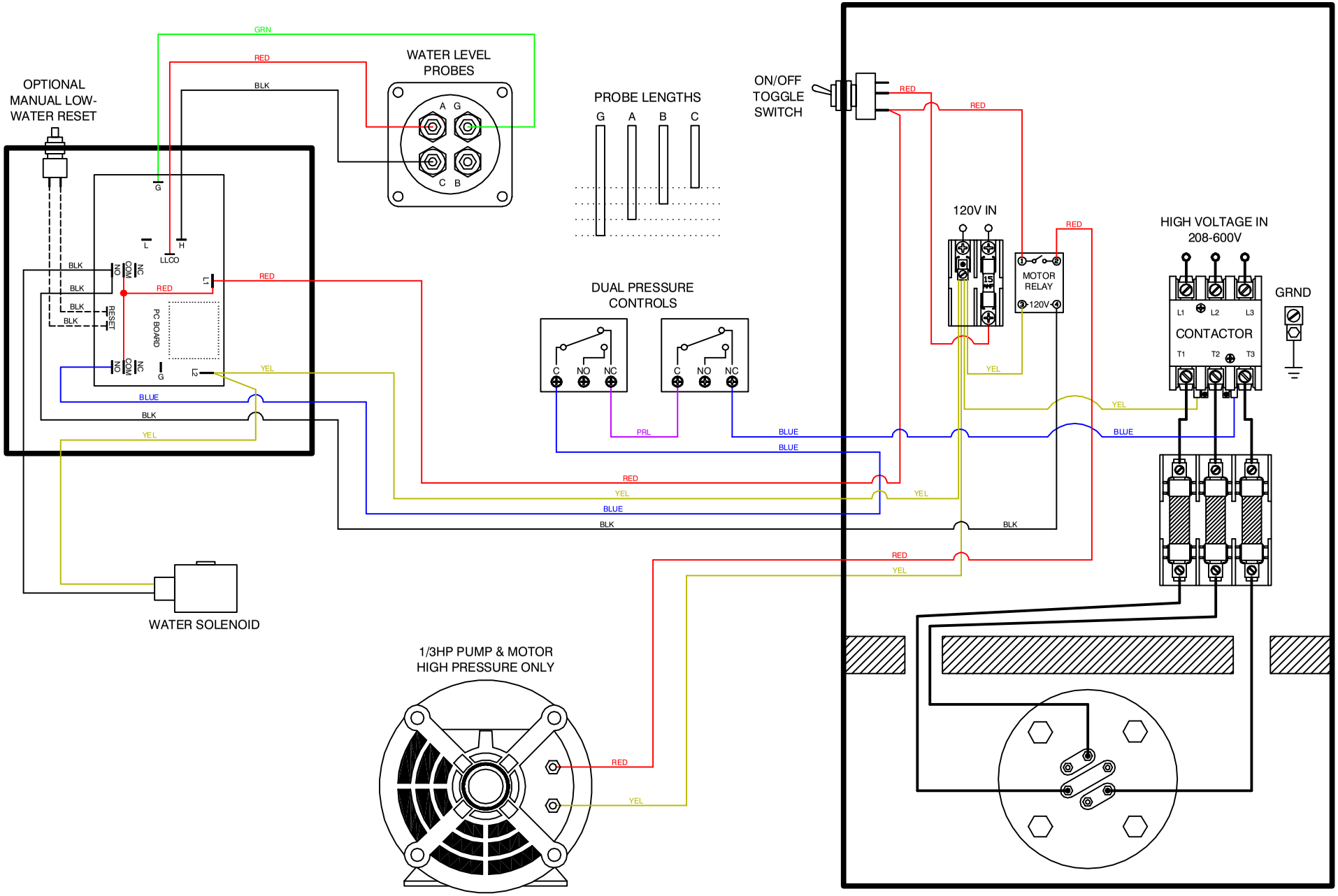

This drawing and all information therein are the property of Electro-Steam Generator Corp. and shall not be disclosed, in whole or in part, to any third party without prior permission of Electro-Steam Generator Corp.

DRAWING TITLE: LB (H)		MODEL UNIT: LB 10-240		ELECTRO-STEAM GENERATOR CORP. 50 Indel Ave. P.O. Rancocas, NJ 08073-0438
DECRIPTIONS:	DRAWN BY:	CHRISTOPHER FERRARA	12-30-09	
HIGH PRESSURE	CHECKED:	CHRISTOPHER FERRARA	12-30-09	
-	ENGINEER:	-	-	DWG NO.: 111-010-240-111200 / SCALE: N/A
-	APPROVED:	SAL NEGRO	12-30-09	SHEET: 1 OF 1

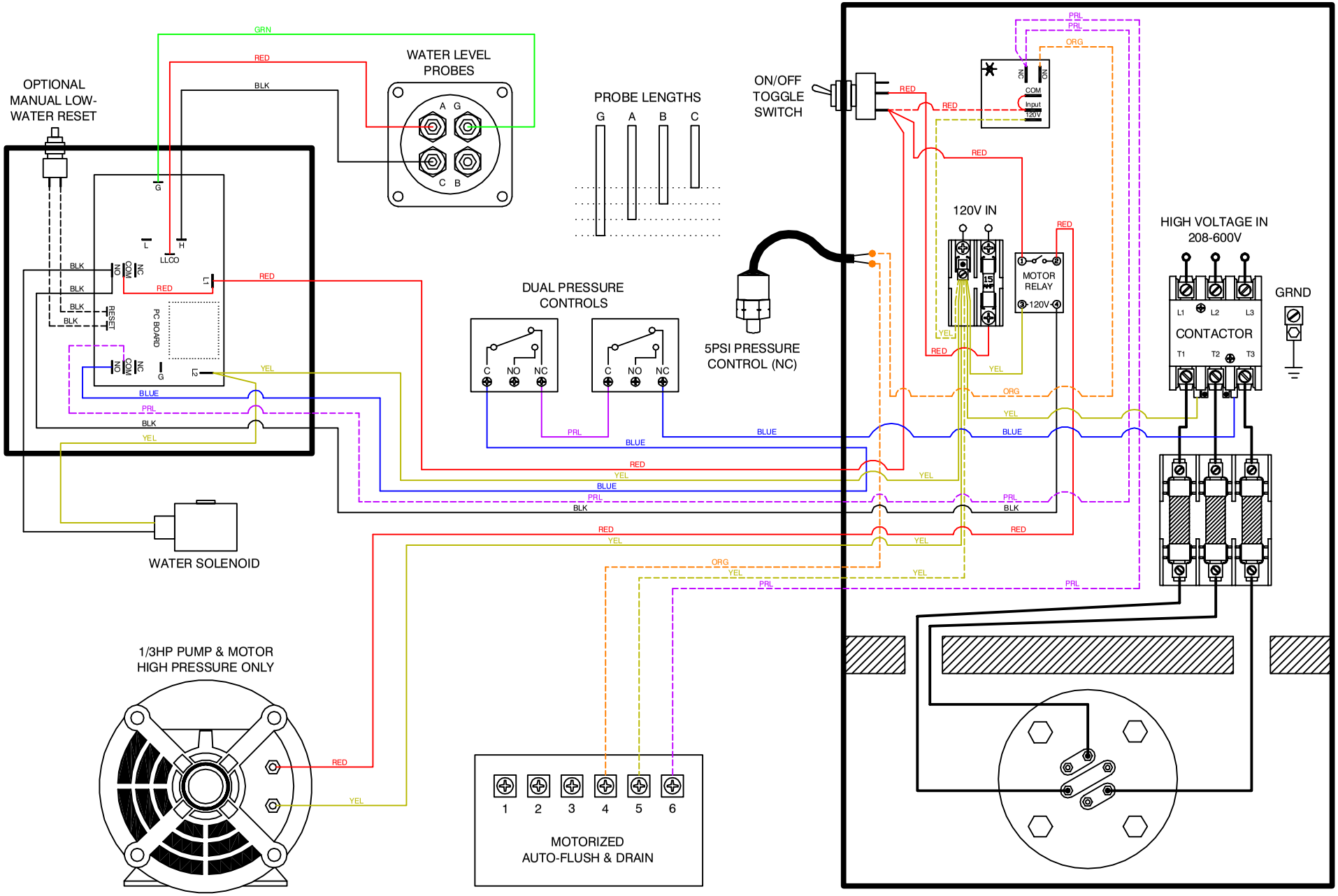

This drawing and all information therein are the property of Electro-Steam Generator Corp. and shall not be disclosed, in whole or in part, to any third party without prior permission of Electro-Steam Generator Corp.

DRAWING TITLE: LB (H)(MAFD)		MODEL UNIT: LB 10-240		ELECTRO-STEAM GENERATOR CORP. 50 Indel Ave. P.O. Rancocas, NJ 08073-0438
DECRIPTIONS:	DRAWN BY:	CHRISTOPHER FERRARA	12-30-09	
HIGH PRESSURE	CHECKED:	CHRISTOPHER FERRARA	12-30-09	
MOTORIZED AUTO-FLUSH & DRAIN	ENGINEER:	-	-	DWG NO.: 111-010-240-111210 / SCALE: N/A
-	APPROVED:	SAL NEGRO	12-30-09	SHEET: 1 OF 1

(3PH) 40-60KW (208-240V)

(1) **13064** - *200 AMP TERMINAL BLOCKS*
(4) **13069** - *75AMP CONTACTORS*
(4) **13056** - *60AMP 250V FUSE BLOCKS*

(3PH) 40KW - (208-240V)

(12) **13013** - *40AMP 250V CLS-RK5 FUSES*
(2) **10022** or **10023** - *20KW 208 or 230V HEATERS*

(3PH) 50KW - (208-240V)

(12) **13044** - *50AMP 250V CLS-RK5 FUSES*
(2) **10079** or **10025** - *25KW 208 or 230V HEATERS*

(3PH) 60KW - (208-240V)

(12) **13046** - *60AMP 250V CLS-RK5 FUSES*
(2) **10028** or **10029** - *30KW 208 or 230V HEATERS*

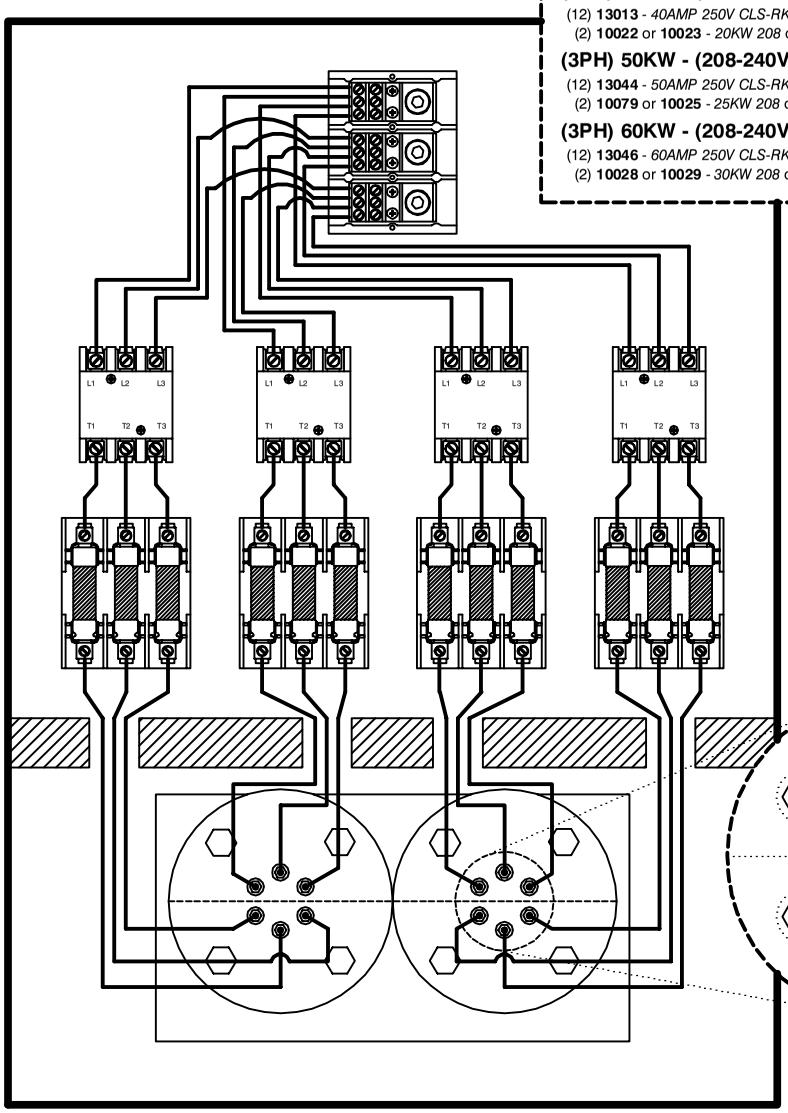

HEATER COILS MUST GO FROM TOP TO BOTTOM.

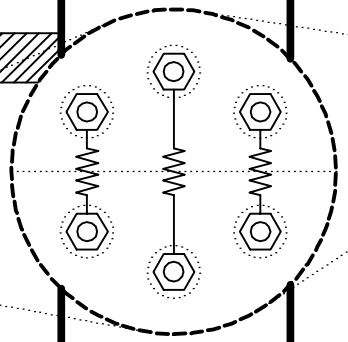

(3PH) 80KW - (208-240V)

(1) **13064** - *200 AMP TERMINAL BLOCK*
(6) **26137** - *50AMP 3POLE CIRCUIT BREAKERS*
(6) **13069** - *75AMP CONTACTORS*
(3) **10079** or **10025** - *25KW 208 or 230V HEATERS*

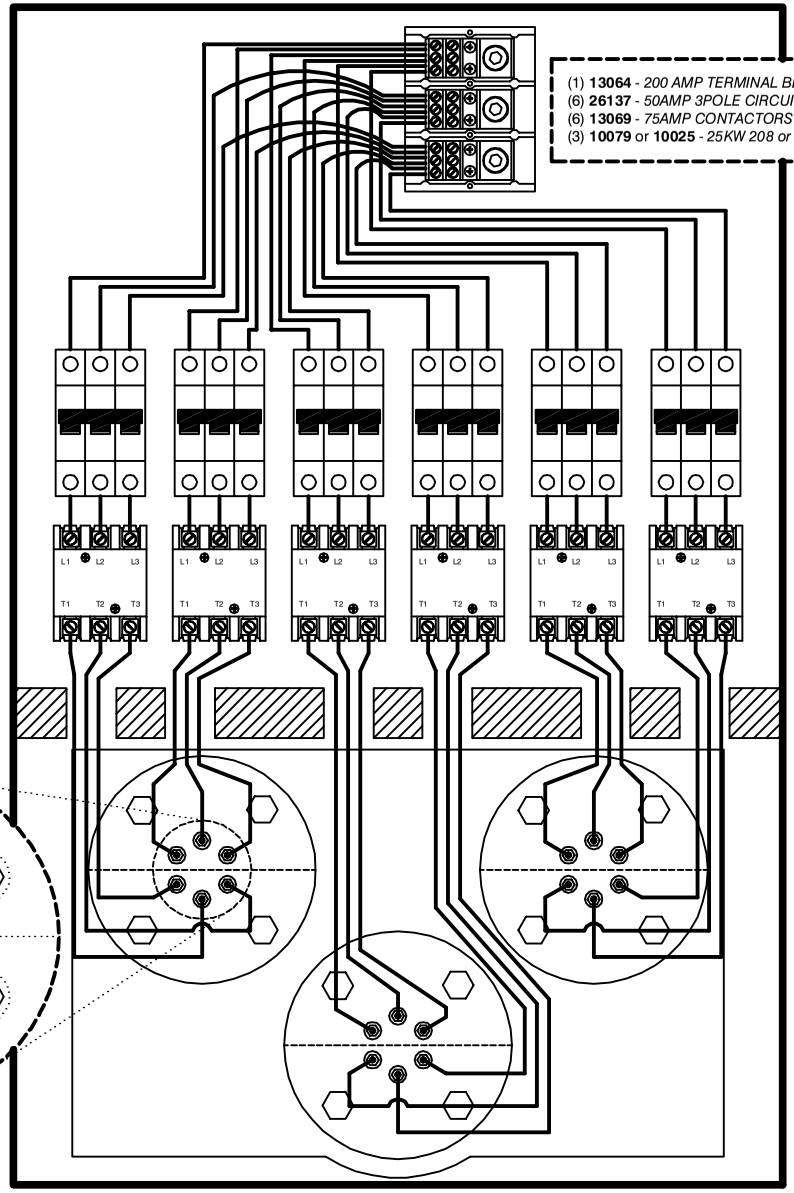

This drawing and all information therein are the property of Electro-Steam Generator Corp. and shall not be disclosed, in whole or in part, to any third party without prior permission of Electro-Steam Generator Corp.

DRAWING TITLE: (HEATERS) LB 40-60 (3PH)(208-240V)		MODEL UNIT: LB 40-60		ELECTRO-STEAM GENERATOR CORP. 50 Indel Ave. P.O. Rancocas, NJ 08073-0438
DECRIPTIONS:	DRAWN BY:	CHRISTOPHER FERRARA	12-30-09	
THREE PHASE HEATER WIRING	CHECKED:	CHRISTOPHER FERRARA	12-30-09	
40-80KW 208-240V	ENGINEER:	-	-	DWG NO.: - / SCALE: N/A
-	APPROVED:	SAL NEGRO	12-30-09	SHEET: 1 OF 1

(3PH) 40-50KW - (380-415V)

(3PH) 60KW - (380-415V)

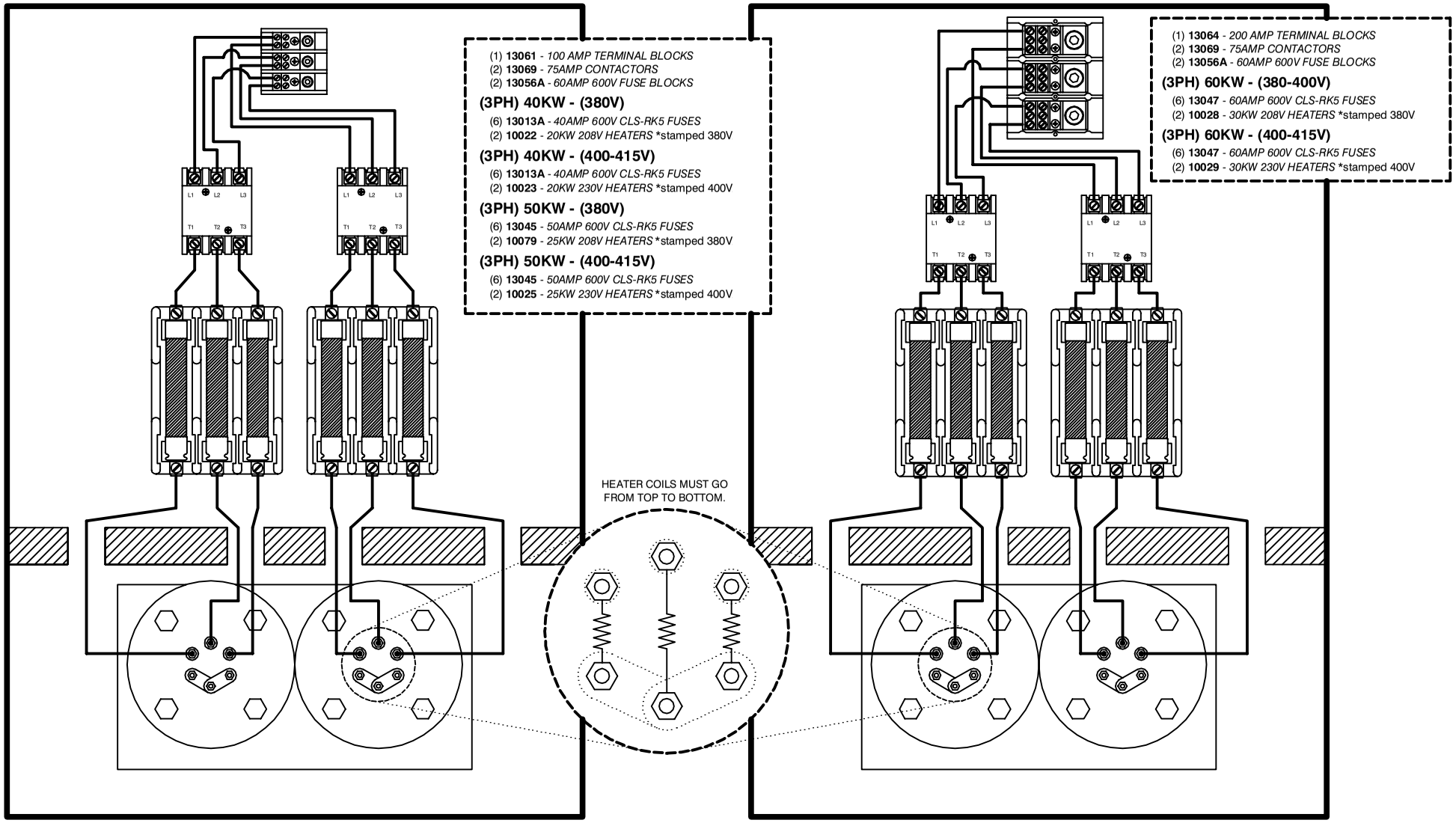

This drawing and all information therein are the property of Electro-Steam Generator Corp. and shall not be disclosed, in whole or in part, to any third party without prior permission of Electro-Steam Generator Corp.

DRAWING TITLE: (HEATERS) LB 40-60 (3PH)(380-415V)		MODEL UNIT: LB 40-60		ELECTRO-STEAM GENERATOR CORP. 50 Indel Ave. P.O. Rancocas, NJ 08073-0438
DECRIPTIONS:	DRAWN BY:	CHRISTOPHER FERRARA	12-30-09	
THREE PHASE HEATER WIRING	CHECKED:	CHRISTOPHER FERRARA	12-30-09	
40-60KW 380-415V	ENGINEER:	-	-	DWG NO.: - / SCALE: N/A
-	APPROVED:	SAL NEGRO	12-30-09	SHEET: 1 OF 1

(3PH) 40KW - (440-480V)
(3PH) 40-50KW - (550-600V)

(3PH) 50-60KW - (440-480V)
(3PH) 60KW - (550-600V)

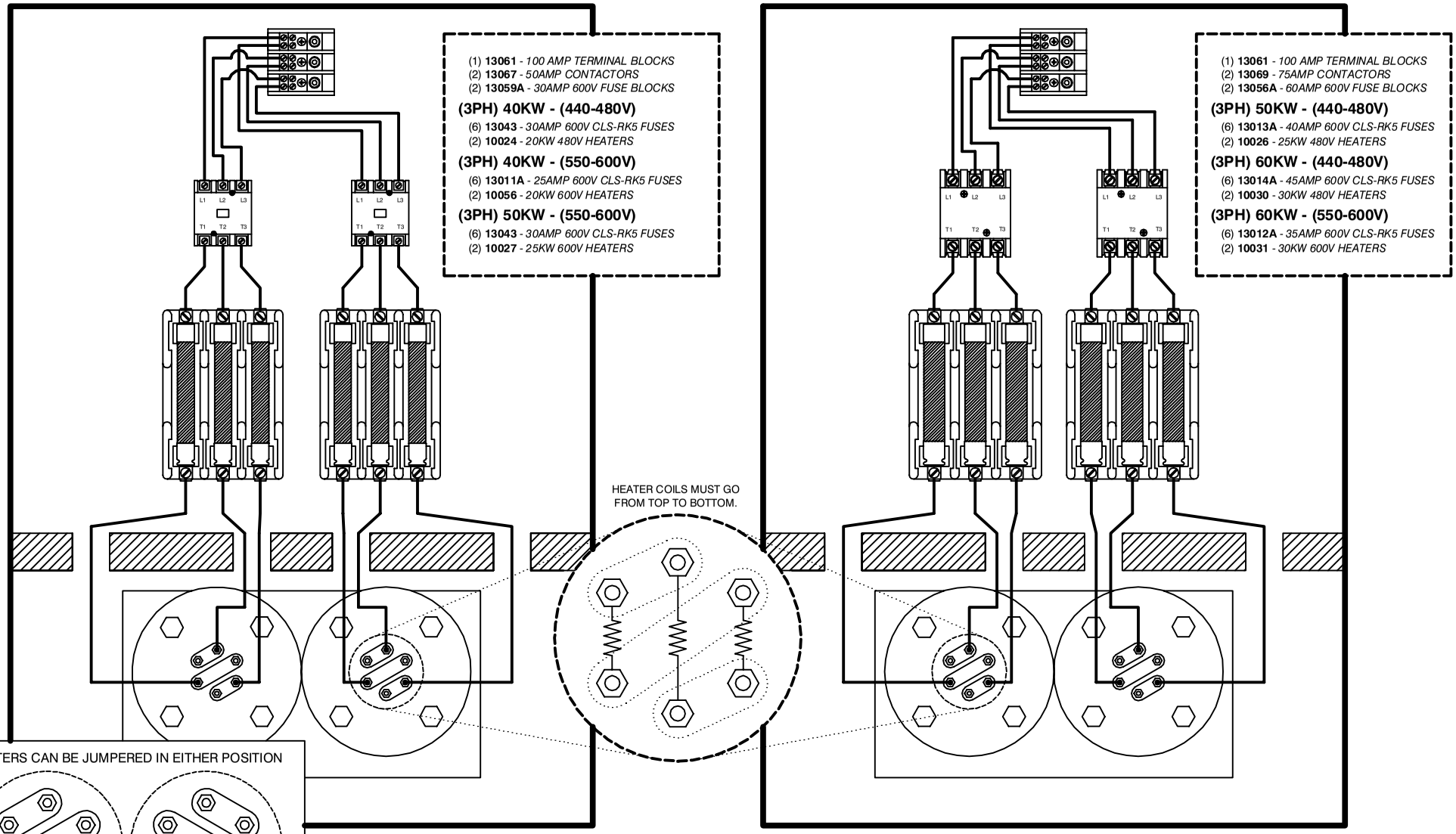

HEATERS CAN BE JUMPERED IN EITHER POSITION

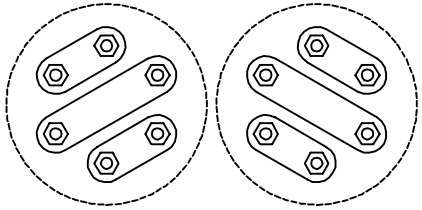

This drawing and all information therein are the property of Electro-Steam Generator Corp. and shall not be disclosed, in whole or in part, to any third party without prior permission of Electro-Steam Generator Corp.

DRAWING TITLE: (HEATERS) LB 40-60 (3PH)(440-600V)		MODEL UNIT: LB 40-60		ELECTRO-STEAM GENERATOR CORP. 50 Indel Ave. P.O. Rancocas, NJ 08073-0438
DECRIPTIONS:	DRAWN BY:	CHRISTOPHER FERRARA	12-30-09	
THREE PHASE HEATER WIRING	CHECKED:	CHRISTOPHER FERRARA	12-30-09	
40-60KW 440-600V	ENGINEER:	-	-	DWG NO.: - / SCALE: N/A
-	APPROVED:	SAL NEGRO	12-30-09	SHEET: 1 OF 1

ELECTRO-STEAM GENERATOR CORPORATION TERMS AND CONDITIONS OF SALE

EXCLUSIVE AND ENTIRE: The following Standard Terms and Conditions are intended by the parties to govern all the purchases of equipment, parts or service from Seller, and together with the specifications provided or embodied herewith, represent the entire understanding of the parties without exception. All other terms and conditions are specifically rejected, and by proceeding with the transaction in any manner, both Seller and Buyer agree that these Standard Terms and Conditions shall control. The price charged by Seller is based on these Standard Terms and Conditions.

PAYMENT TERMS: Within Continental USA Net 30 days. A "late payment" or service charge in the form of interest at the rate of 2% per month or a service charge of like amount will be levied on all late payments (the type of charge being consistent with the applicable local law). Payment is full without retainer and /or any unauthorized sums deducted is expected.
NOTE: Terms pending credit approval. Approved credit is from the date of invoice (not date of arrival of goods).

TAXES: No taxes of any kind are included. All prices herein and/or contracts shall be subject to increase without notice by the amount of present or future sales or excise tax levied or charged, either by Federal, State or any other assessing agency.

CHANGES: Changes made after fabrication has begun shall be submitted in writing, signed by Buyer. Buyer agrees to pay the cost of any changes. The specifications and prices are subject to change without notice.

CLAIMS: Title passes to the Buyer upon delivery to the carrier, unless otherwise indicated. Safe delivery is the responsibility of the carrier. Damaged merchandise, if accepted, should be noted on the delivery receipt and on the freight bill before acceptance of shipment. Make claim promptly.

LOCAL CODES: All steam boilers are built in accordance with ASME miniature boiler codes. NOTE: It is the responsibility of the installer to conform to any state or local codes. If further inspection following modifications by the installer is required under state and local codes it is the responsibility of the local installer.

SEVERABLE AND INDEPENDENT PROVISION: WITHOUT LIMITING THE FOREGOING, IT IS EXPRESSLY UNDERSTOOD AND AGREED THAT EACH AND EVERY PROVISION OF THIS AGREEMENT THAT PROVIDES FOR A LIMITATION OF LIABILITY, DISCLAIMER OF WARRANTIES, OR EXCLUSION OF DAMAGES IS INTENDED BY THE PARTIES TO BE SEVERABLE AND INDEPENDENT OF ANY OTHER PROVISION AND TO BE ENFORCED AS SUCH, FURTHER, IT IS EXPRESSLY UNDERSTOOD AND AGREED THAT IN THE EVENT ANY REMEDY HEREUNDER IS DETERMINED TO HAVE FAILED ITS ESSENTIAL PURPOSE, ALL OTHER LIMITATIONS OF LIABILITY AND EXCLUSION OF DAMAGES SET FORTH HEREIN SHALL REMAIN IN FULL FORCE AND EFFECT. ALL SUCH PROVISIONS SHALL SURVIVE THE TERMINATION OF THIS AGREEMENT. NO ACTION, REGARDLESS OF FORM, ARISING OUT OF THE TRANSACTIONS OF THIS AGREEMENT MAY BE BROUGHT BY BUYERMORE THAN ONE YEAR AFTER THE CAUSE OF ACTION HAS ACCRUED.

WARRANTY: Seller warrants that the equipment, service, software, repair or parts supplied shall conform to the description. In the event that any part or parts, excepting expendable items such as, but not limited to, coil liners, thermocouples, refractories and other similar consumable items, that fail due to defects in material or workmanship within the first twelve (12) months of startup of equipment or eighteen (18) months after shipment, whichever occurs first, or in the case of service, repairs, or parts, within twelve (12) months of supplying such service, repair or part, Seller shall at its option, repair or replace EXW (Ex works), such defective part or parts. If the equipment, service, repair or part included software, Seller warrants, for a period of twelve (12) months of startup or eighteen (18) months after shipment, whichever occurs first, that the software supplied or serviced will meet its published functional specifications. Should software fail to meet the specifications, or be otherwise defective, Seller shall promptly correct errors or non-conformities. If correction is not possible, Seller shall replace defective software, or, at Seller=s option, refund the purchase price paid for such software. The warranty obligations of Seller with respect to equipment not manufactured by Seller shall conform to and be limited to the warranty actually extended to Seller by its suppliers. Notice of a claim for alleged defective equipment must be given within fifteen (15) days after Buyer learns of the defect. The defective part or parts shall be returned to Seller, freight prepaid, unless otherwise directed by Seller. This warranty shall be exclusive and in lieu of any other warranties and Seller makes no warranty of merchantability or warranties of any other kind express or implied, including any implied warranty of fitness for a particular purpose which extend beyond the warranty as set forth above. Seller=s liability for any and all losses and damages to Buyer resulting from defective parts of equipment shall in no event exceed the cost of repair or replacement, EXW of defective parts or equipment. IN NO EVENT SHALL SELLER BE LIABLE FOR INCIDENTAL, SPECIAL OR CONSEQUENTIAL DAMAGES OF ANY KIND OR NATURE WHATSOEVER.

PATENT INDEMNITY: Seller agrees to indemnify Buyer against any proven claim and assessed liability for infringement of any United States patent arising from the manufacture or sale of any apparatus furnished by Seller to Purchaser. THE FOREGOING STATES SELLER'S ENTIRE LIABILITY FOR CLAIMS OR PATENT INFRINGEMENT. Seller shall have no liability whatsoever if the claim of infringement arises out of Seller's compliance with Purchaser's specifications. Seller shall have no liability whatsoever if a claim of infringement is based upon the Purchaser's use of the equipment as part of a patented combination where the other elements of the combination are not supplied by Seller, or in the practice of a patented process. Where the specifications, process, design are supplied by Purchaser, then Buyer agrees to indemnify Seller in like manner.

PROPRIETARY RIGHTS: Unless otherwise stated herein all design, manufacturing processes, manufacturing information, vendor sources, know-how, equipment, tooling or other hardware, software, or information (collectively referred to as "resources") acquired or utilized by the Seller to produce the finished goods, and any intellectual property rights, including but not limited to patents, copyrights and trade secrets related in any way to the resources, are and shall hereinafter remain the exclusive property of the Seller, regardless of whether such resources are created solely by the Seller, or by Buyer's collaboration with the Seller, for example, where Seller utilizes Buyer's specifications to create resources, and the Buyer shall acquire or receive no rights or title therein or thereto as a result of this purchase whether or not the order provides for Seller's delivery of technical data, drawings or other information to the Buyer in addition to the finished goods. Unless Seller's prior written consent is given, in no event shall the Buyer permit such data, drawings or information to be: (1) disclosed to any third party other than the Buyer's customer; (2) used by the Buyer or the Buyer's customer for manufacture of like or similar goods; (3) used for purposes of duplicating or reverse-engineering Seller's proprietary designs or processes; or (4) used by a party other than the Buyer or the Buyer's customer for any purpose.

LIMITATION OF LIABILITY: SELLER'S TOTAL AGGREGATE LIABILITY (ARISING OUT OF OR IN CONNECTION WITH BUT NOT LIMITED TO ANY BREACH OF CONTRACT, NEGLIGENCE, TORT, LIQUIDATED DAMAGES, SPECIFIC PERFORMANCE, TERMINATION, CANCELLATION INCLUDING THE REPAYING OF THE CONTRACT PRICE OR PARTS THEREOF, FUNDAMENTAL BREACH, BREACH OF WARRANTIES, MISREPRESENTATION, NONPERFORMANCE, NONPAYMENT, OR ANY OTHER) WHETHER BASED IN CONTRACT, IN TORT, IN EQUITY, ON STATUE, AT LAW OR ON ANY OTHER THEORY OF LAW, SHALL NOT EXCEED THE PAID CONTRACT PRICE. THE BUYERACKNOWLEDGES THAT THE REMEDIES PROVIDED IN THIS CONTRACT ARE EXCLUSIVE AND IN LIEU OF ALL OTHER REMEDIES AVAILABLE TO THE BUYERAT LAW, IN CONTRACT, IN TORT, IN STATUTE OR IN EQUITY OR IN ANY OTHER THEORY OF LAWS.

INSURANCE: Buyer represents that they have a program of Insurance which adequately protects their interest, and that of their employees and agents, including damage to plant, property and equipment, personal injury of any kind, directly or indirectly related in any way to the equipment, service, repair or parts supplied by Seller. Accordingly, Buyer waives any claim against Seller for the foregoing, and on behalf of its Insurance Company, any right of subrogation in connection therewith.

U.S. EXPORT CONTROLS: All items furnished by Seller to Buyer in connection herewith shall at all times be subject to the export control laws and regulations of the U.S. including, but not limited to, 10 CFR Part 810 and U.S. Export Administration Regulations. Buyer agrees and give assurance that no items, equipment, materials, service, technical data, technology, software or other technical information or assistance furnished by Seller, or any good or product resulting therefrom, shall be exported or re-exported by Buyer or its authorized transferees, if any, directly or indirectly, unless in accordance with applicable U.S. export laws and regulations. The aforesaid obligations shall survive any satisfaction, expiration, termination or discharge of any other contract obligations.

FREIGHT TERMS: F.O.B. Factory, NO FREIGHT ALLOWED. All charges for unloading and transportation to job site are at the Buyer=s expense.

INSTALLATION: No installation or job supervision charges are included.

RETURN OF MATERIAL: No goods will be accepted for return without a return authorization number from the factory. A 25% restocking fee is charged on returns, freight prepaid.

FORCE MAJEURE: If the performance of any part of this contract by Seller is rendered commercially impracticable by reason of any strike, fire, flood, accident, or any other contingency, the non-occurrence of which was a basic assumption of this contract including war, embargo, government regulation, or any unforeseen shutdown of major supply sources or other like causes beyond the control of Seller such as cannot be circumvented by reasonable diligence and without unusual expense, Seller shall be excused from such performance in whole or in part to the extent that it is prevented and for as long a period of time as these conditions render Seller's performance commercially impractical.

LAW: This Agreement shall be governed by the internal laws of the State of New Jersey, USA, and any claims arising hereunder shall be prosecuted in the US District Court having jurisdiction of causes arising in the District in which Seller is located. CISG (the Convention for the International Sale of Goods) is expressly rejected.