KLING STUBBINS

ARCHITECTURE
ENGINEERING
INTERIORS
PLANNING

Division of Capital Asset Management (DCAM)

John W. McCormack Building Energy Upgrades

Basis of Design (BOD)

November 16, 2012

DCAM Project # DCP1021 ES1

KS Project # 36.7407.00

One Broadway
Cambridge, Massachusetts
02142

P 617.491.6450
F 617.491.7104

John W. McCormack Building Energy Upgrades

Basis of Design (BOD)

November 16, 2012

Contents

1 Introduction

2 Section Not Used

3 Architectural

4 Structural

5 Heating, Ventilating and Air Conditioning (HVAC)

6 Plumbing

7 Fire Protection

8 Instrumentation and Controls

9 Electrical

10 Commissioning

11 Training and Maintenance

12 Asbestos

13 General Requirements

011000 – Summary

013100 – Project Management

013200 – Construction Progress

013300 – Submittal Requests

013543 – Environmental Protection

John W. McCormack Building Energy Upgrades

Basis of Design (BOD)

November 16, 2012

Contents

014000 – Quality Requirements

014200 – References

014325 – Testing Agency

015000 – Temp Facilities

016000 – Product Requirements

017418 – Demolition Waste Management

017419 – Construction Waste Management

017700 – Contract Closeout

017900 – Demonstration and Training

018100 – Commissioning

024100 – Demolition

Appendices

A – Equipment Cut Sheets

- A.1 – High Efficiency Motors
- A.2 – Variable Air Volume (VAV) Boxes
- A.3 – Low Pressure Drop Air Filters
- A.4 – Plate and Frame Heat Exchangers
- A.5 - Pumps
- A.6 – High Efficiency Water Fixtures
- A.7 – Air Handling Unit – Pre-Balancing Test Report and New Airflows
- A.8 – Level 7 – Air Handling Unit Ductwork Changes

B – ECM Matrix and Cost Estimate

C – Asbestos O & M Program Manual

Drawings

G-000	COVER SHEET
M-001	MECHANICAL SYMBOLS
M-002	MECHANICAL ABBREVIATIONS
M-003	MECHANICAL CONTROLS SYMBOLS & ABBREVIATIONS
M-100	McCORMACK GROUND FLOOR PLAN

John W. McCormack Building Energy

Upgrades

Basis of Design (BOD)

November 16, 2012

Contents

M-101	McCORMACK LEVEL 7 PLAN
M-102	McCORMACK LEVEL 22 PLAN
M-200	McCORMACK PLAZA
M-201	McCORMACK LEVEL 1
M-202	McCORMACK LEVEL 2
M-203	McCORMACK LEVEL 3
M-204	McCORMACK LEVEL 4
M-205	McCORMACK LEVEL 5
M-206	McCORMACK LEVEL 6
M-208	McCORMACK LEVEL 8
M-209	McCORMACK LEVEL 9
M-210	McCORMACK LEVEL 10
M-211	McCORMACK LEVEL 11
M-212	McCORMACK LEVEL 12
M-213	McCORMACK LEVEL 13
M-214	McCORMACK LEVEL 14
M-215	McCORMACK LEVEL 15
M-216	McCORMACK LEVEL 16
M-217	McCORMACK LEVEL 17
M-218	McCORMACK LEVEL 18
M-219	McCORMACK LEVEL 19
M-220	McCORMACK LEVEL 20
M-221	McCORMACK LEVEL 21
M-600	MECHANICAL DIAGRAMS
M-700	MECHANICAL CONTROLS
M-701	MECHANICAL CONTROLS
M-702	MECHANICAL CONTROLS
M-703	MECHANICAL CONTROLS
M-704	MECHANICAL CONTROLS
M-705	MECHANICAL CONTROLS
M-706	MECHANICAL CONTROLS
M-707	MECHANICAL CONTROLS
M-800	MECHANICAL DETAILS
M-900	MECHANICAL SCHEDULES

1 Introduction

1.1 Purpose

The purpose of this document is to build upon the preliminary design concepts, criteria, and analysis results of the feasibility study by developed by Celtic Energy, issued May 20, 2011 for the energy conservation tasks at the John W. McCormack building. This project is being conducted by the Division of Capital Asset Management (DCAM) located in Boston, Massachusetts.

This document is the Basis of Design (BOD) which identifies the architectural and engineering systems required for this project and design criteria. It will form the basis for the project design (by designer of record) to be documented in the Detailed Design Phase.

1.2 Deliverables

The deliverables of this project in general will include the following:

- KlingStubbins (KS) has provided this bridging documentation including this BOD document, design criteria, drawings, diagrams and 100% performance specifications to develop the design to 30% completion. The remainder of the design and documentation will be carried out by a design/build contractor.

1.3 Project Scope

The scope of this project in general will include but is not limited the following:

- Remove and provide new air handling units and return fans in a like-kind replacement
- Replace pneumatic controls for all air handlers and central plant equipment
- Provide new equipment for condenser water heat recovery
- Provide cogged belts and pulleys for fans
- Provide Variable Frequency Drives (VFD) for all supply and return fans
- Replace existing Variable Air Volume (VAV) and Constant Volume (CV) boxes with new VAV boxes

- Provide insulation for hot water and chilled water pumps and domestic water heaters
- Installation of premium efficiency motors for fans over 5 HP
- Replace 3-way chilled water valves with 2-way type and provide VFDs on secondary chilled water pumps
- Seal major ducts in mechanical rooms with aerosol spray
- Installation of CO2 sensors in ductwork to provide Demand Control Ventilation
- Provide new controls, actuation, and dampers for AHU economizers
- Provide monitoring and monitor for an Energy Dashboard
- Water Conservation via new fixtures and flush valves for urinals and water closets
- BAS Upgrade
- Replace pumps with higher efficiency model
- Provide vacancy sensors and replace all pneumatic induction unit controls with DDC
- Installation of Internal Storm Windows
- Installation of high-efficiency T8 lighting
- Installation of occupancy sensors and daylight sensors
- Replacement of old incandescent/metal halide fixtures with CFLs fixtures
- Provide equipment for recovering cooling coil condensate

- Provide documentation and implementation of architectural and structural modifications required as a result of this project scope

1.4 General Requirements

The Designer of Record will contact the local fire department(s) early in the design process for additional requirements. Progress and final documentation will be reviewed and approved by the fire marshal.

The Designer of Record will need to submit the design documentation to DCAM and the Department of Public Safety for their review at intervals required by DCAM.

Contractor to provide a minimum seven days notice to building management prior to any shut down and all activities which cause high noise levels. Shutdowns will not extend beyond 24 hours.

All work within occupied spaces shall occur between 6 pm and 6 am.

The Design/Build team is responsible for final design, equipment sizing, quantities and selections. Any increase in equipment size and quantity shall be provided at no additional cost to project or owner. Design/Build team will complete a walk down survey of the building prior to design.

3 Architectural

3.1 Introduction

The Architectural section of the Basis of Design (BOD) describes a scope of work that supports the primary purpose of the project, mechanical and electrical upgrades previously determined as part of a feasibility study.

3.2 Project Site

See Civil, Mechanical and Electrical sections for site information.

3.3 Codes and Standards

The alterations to the buildings shall be designed per the eighth edition of the Massachusetts State Building Code, which is an IBC-based code, adopted in 2010. General ordinances of the City of Boston, Commonwealth of Massachusetts

Code, Regulations and Standards Pertinent to the Project Include:

- 780 CMR 34.00, Massachusetts State Building Code 8th Edition (MSBC).
- 527 CMR, Massachusetts Fire Prevention Regulations (MFPR).
- NFPA 30, Flammable and Combustible Liquids Code (2008 Edition).
- NFPA 13, Standard for the Installation of Sprinkler Systems (2007 Edition).
- NFPA 14, Standard for the Installation of Standpipes and Hose Systems.
- NFPA 72, National Fire Alarm Code (2007 Edition).
- NFPA 70, National Electrical Code (2008 Edition) with Massachusetts Amendments
- NFPA 45, Standard on Fire Protection for Laboratories Using Chemicals (2004 Edition).
- Massachusetts State Plumbing Code, CMR 284.
- Accessibility Code – Architectural Access Regulations, CMR 521; ADA and ABA Accessibility Guidelines for Buildings and Facilities (2005 Edition).

- Energy Code – Massachusetts State Building Code, 780 CMR Article 13.

3.4 Exterior Building Envelope Modifications

All modifications to the exterior envelope of the a building will, at a minimum, meet the performance criteria dictated by the Massachusetts Building Code CMR 780 as well as ASHREA 90.1-2010.

- Walls: All new openings, penetrations and alterations to existing exterior walls shall be patched, flashed and sealed water-tight with similar materials to match existing.
- Roof: All new openings, penetrations and alterations to the existing roof shall be patched, flashed and sealed water-tight with similar materials to match existing.
- Mechanical Appurtenances: Coordinate exact locations with new openings for louvers, through-wall pipe penetrations, flue vents and other equipment. Provide proper flashing to seal appurtenances weathertight.

3.5 Interior Architectural Finishes

In general, finishes will match that of existing rooms. Patch and repaired surfaces shall match existing.

Design build contractor shall patch and paint ceilings & walls as required to accommodate the mechanical scope of work.

3.6 Interior Glazing Panels

All exterior windows are to be fitted with an aluminum sull sash frame and clear single pane glazing. The sull sash is to be mounted on the interior side of the existing window mullion. Provide all necessary trims, fasteners, sealants and gaskets as required for a complete installation. Remove existing vertical blind assemblies. Existing vertical blinds which utilize a bottom track are to be discarded. Existing vertical blinds which do not utilize a bottom track shall be remounted on the interior side of the sull sash. Contractor has the option to reuse these existing blinds or provide new blinds. Provide new vertical blinds to replace blinds with bottom track.

Provide alternate pricing to provide integral blinds with the sull sash. Refer to detail SKA-05 for additional information.

Provide prototype windows to be installed in one bay of the third floor for testing. Test installation for infiltration and perform thermal cycles tests to establish performance for condensation resistance. Informed by the test results, modify the final design to achieve acceptable thermal, aesthetics and condensation conditions.

PLAN AT SULL SASH HINGED AT JAMB

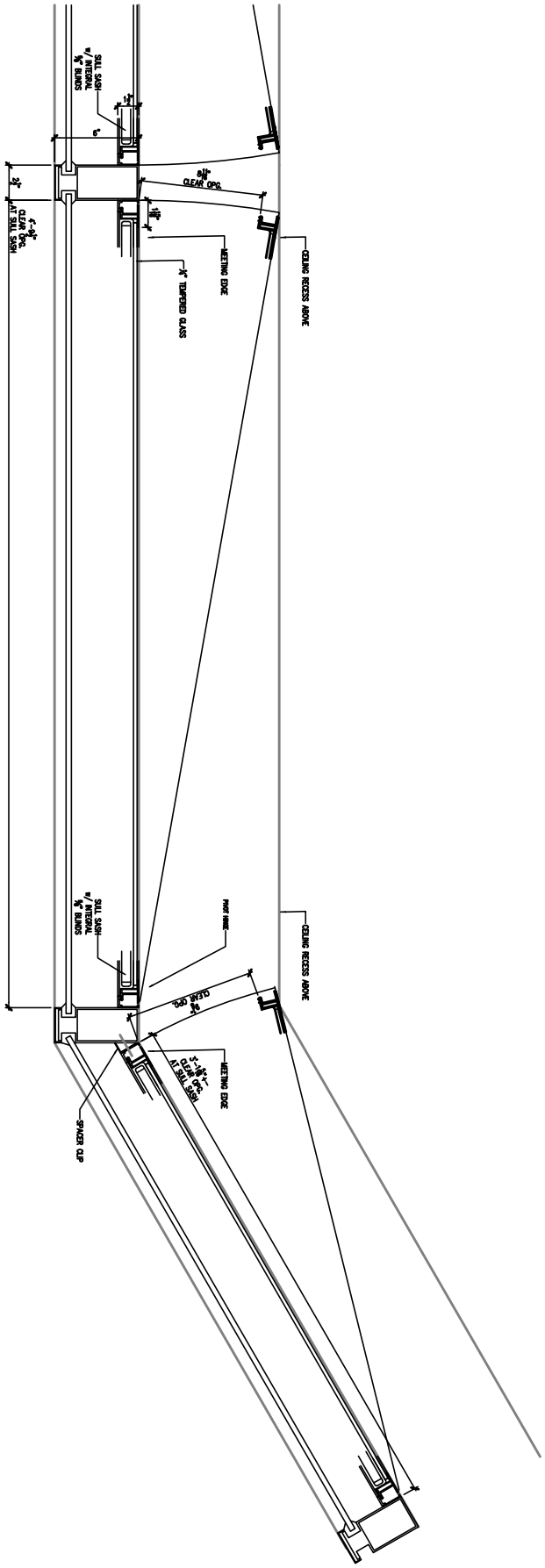

SK-A-01

Scale: 1/2"= 1'-0"

KLING STUBBINS
One Broadway Cambridge, MA 02142
P:617-491-6450 F:617-491-7104

Division of Capital Asset Management (DCAM)

Massachusetts State House Energy Upgrades
Basis of Design Documents
McCormack Building - Window Upgrades

Project No: KS7407000
Drawn By: DT1
Reference:
Date: Nov. 29, 2012

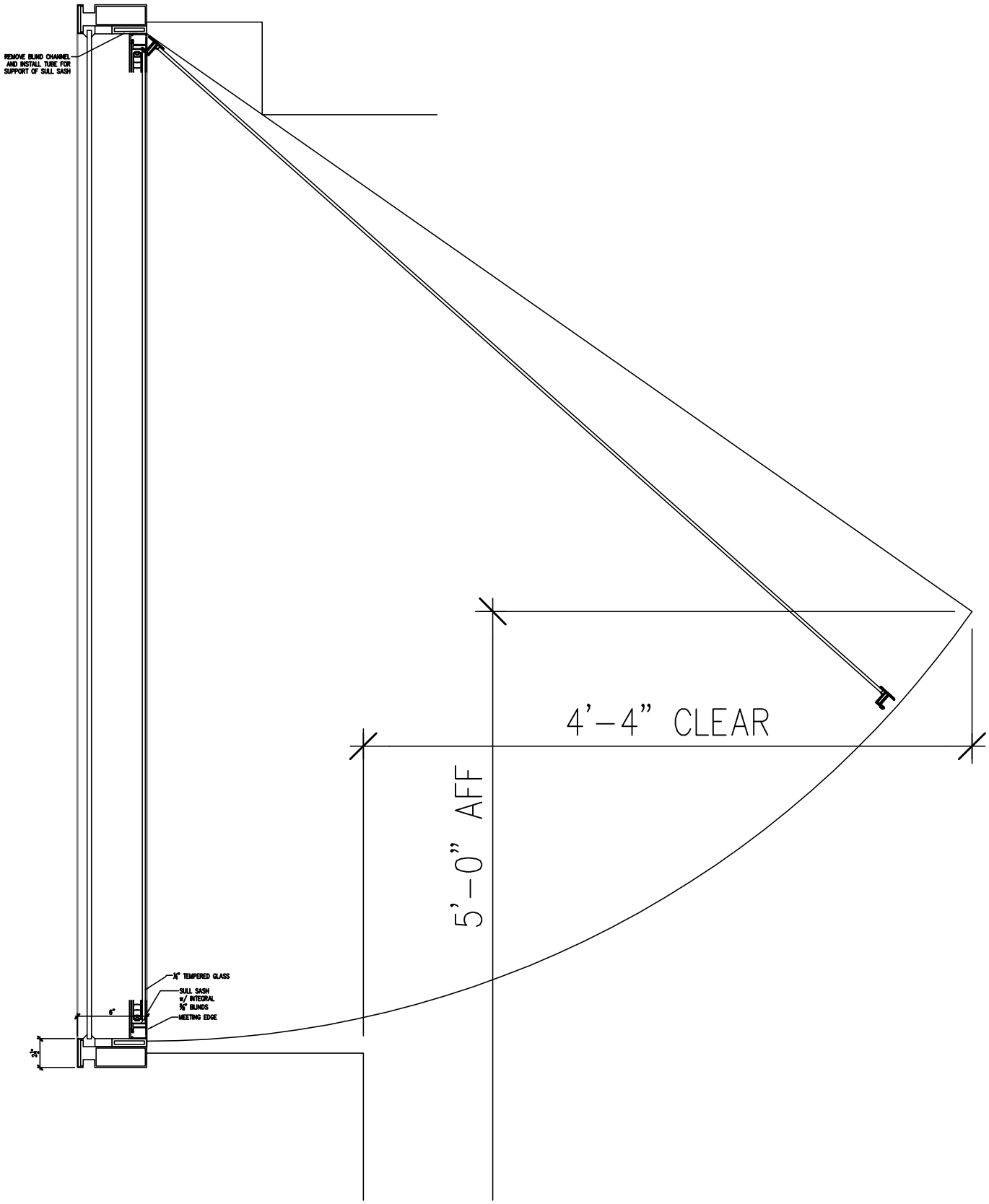

SECTION AT SULL SASH HINGED AT HEAD

SK-A-02

Scale: 1/2"= 1'-0"

KLING STUBBINS
One Broadway Cambridge, MA 02142
P:617-491-6450 F:617-491-7104

Division of Capital Asset Management (DCAM)

Massachusetts State House Energy Upgrades
Basis of Design Documents
McCormack Building - Window Upgrades

Project No: KS7407000
Drawn By: DT1
Reference:
Date: Nov. 29, 2012

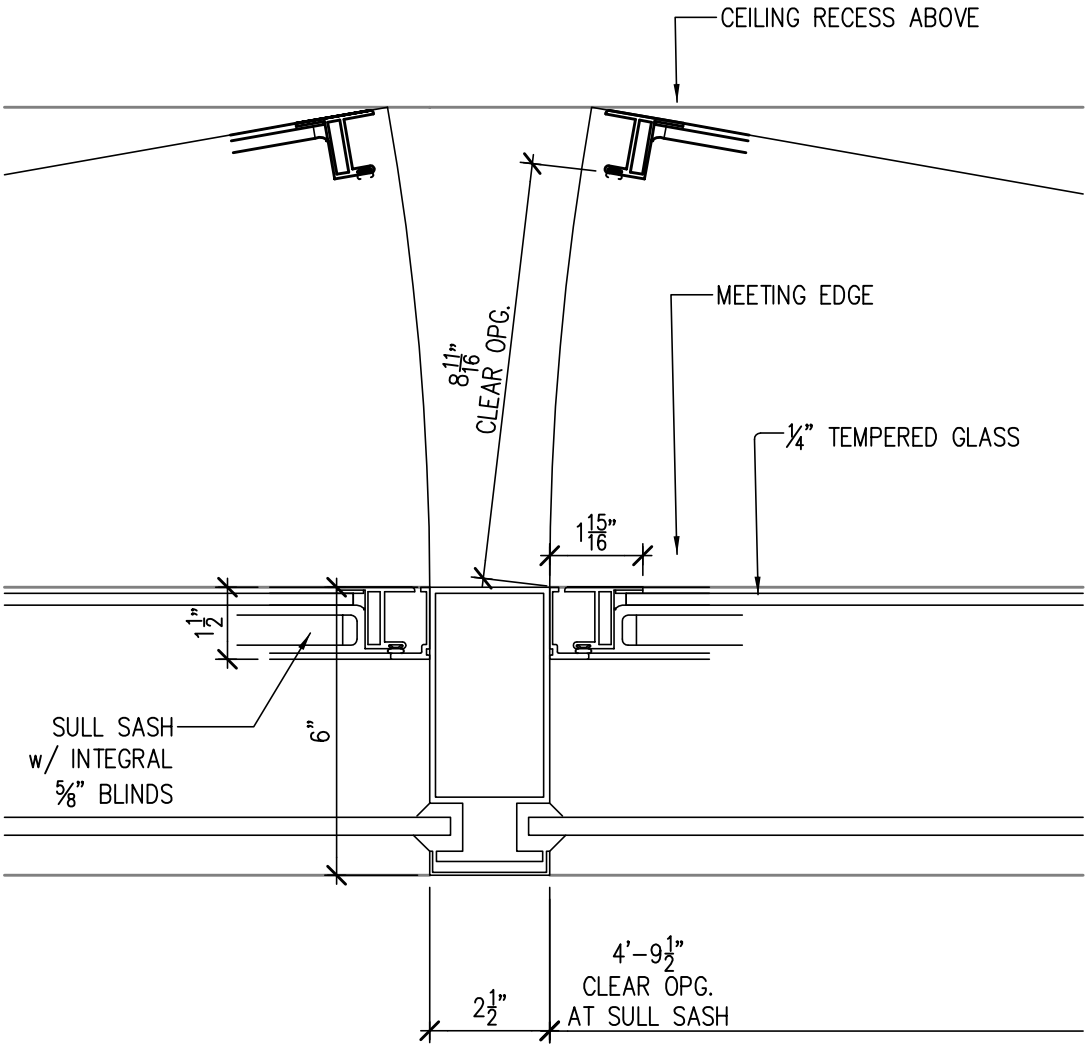

SULL SASH AT INTERMEDIATE MULLION

SK-A-03

Scale: 3"= 1'-0"

KLING STUBBINS
One Broadway Cambridge, MA 02142
P:617-491-6450 F:617-491-7104

Division of Capital Asset Management (DCAM)
Massachusetts State House Energy Upgrades
Basis of Design Documents
McCormack Building - Window Upgrades

Project No: KS7407000
Drawn By: DT1
Reference:
Date: Nov. 29, 2012

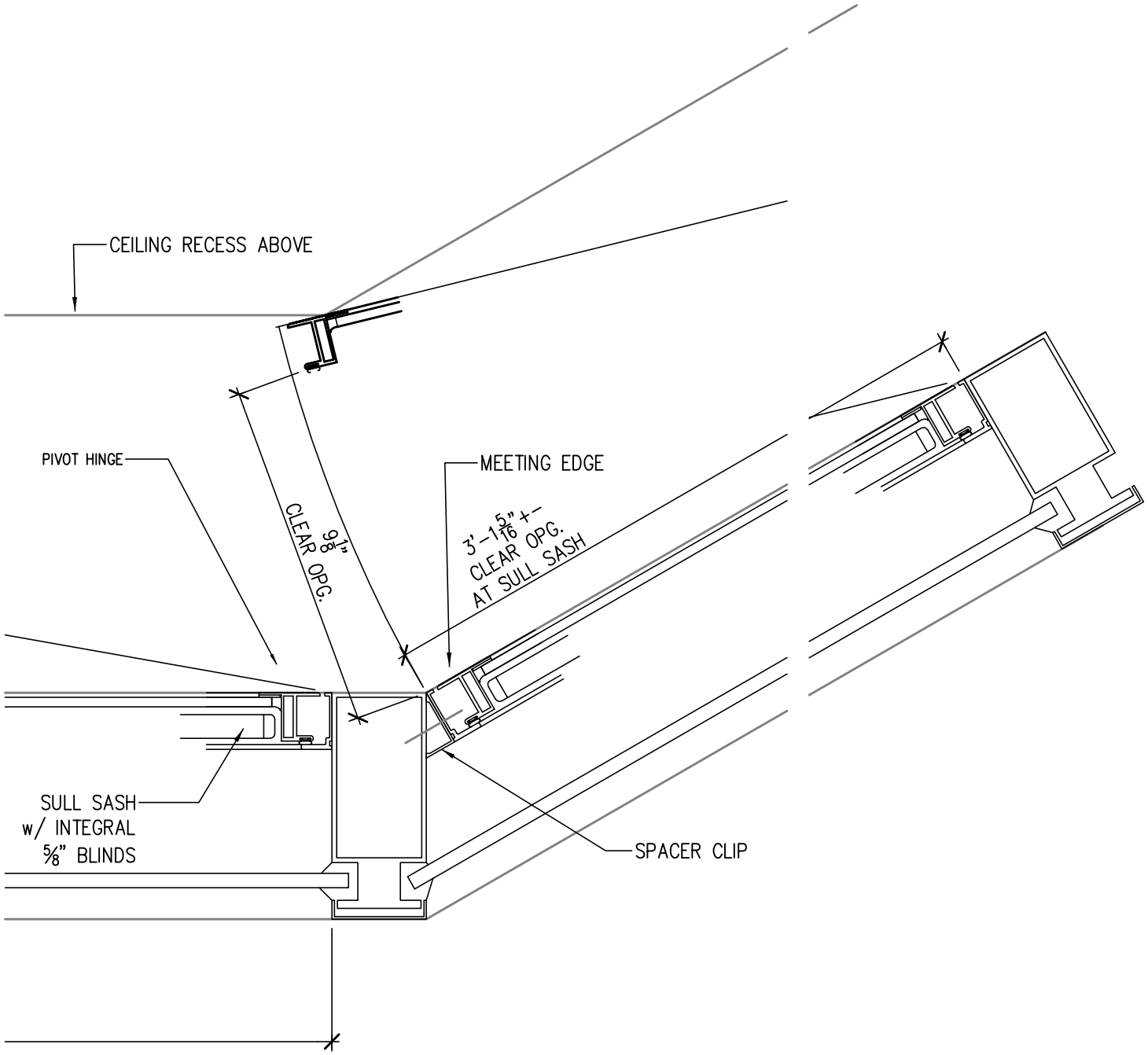

SULL SASH AT BAY WINDOW MULLIONS

SK-A-04

Scale: 3"= 1'-0"

KLING STUBBINS
One Broadway Cambridge, MA 02142
P:617-491-6450 F:617-491-7104

Division of Capital Asset Management (DCAM)
Massachusetts State House Energy Upgrades
Basis of Design Documents
McCormack Building - Window Upgrades

Project No: KS7407000
Drawn By: DT1
Reference:
Date: Nov. 29, 2012

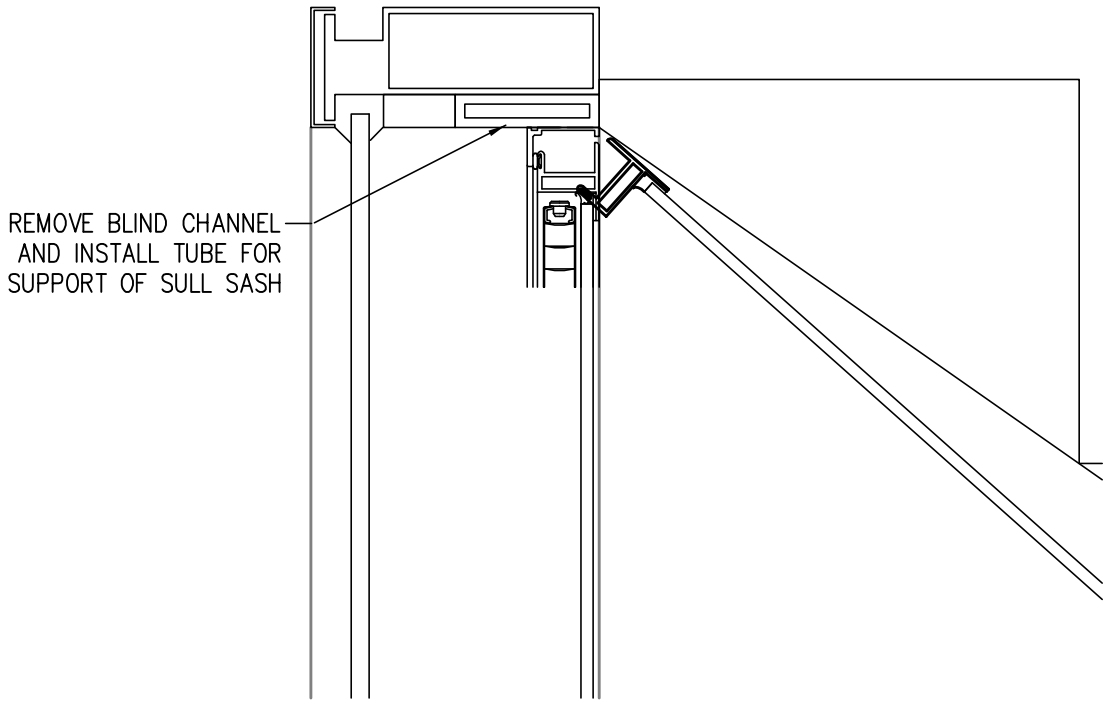

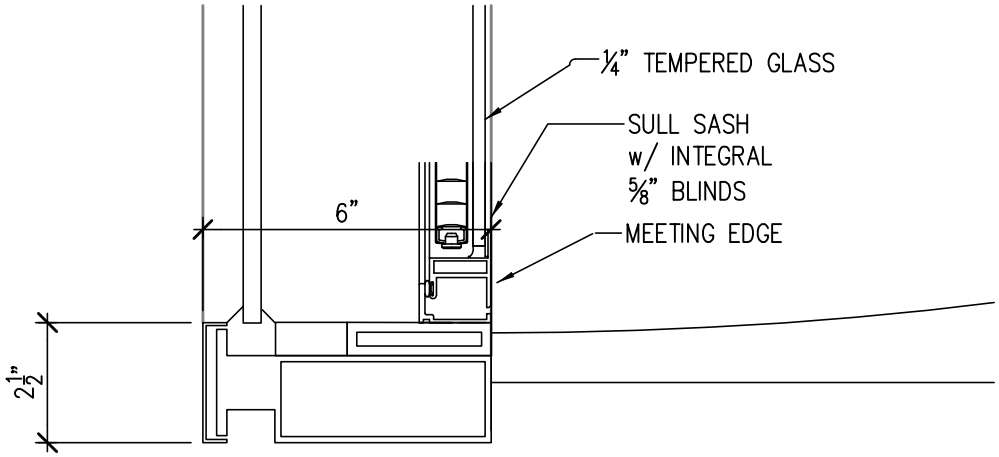

SECTION AT SULL SASH HINGED AT HEAD

SK-A-05

Scale: 3"= 1'-0"

KLING STUBBINS
One Broadway Cambridge, MA 02142
P:617-491-6450 F:617-491-7104

Division of Capital Asset Management (DCAM)
Massachusetts State House Energy Upgrades
Basis of Design Documents
McCormack Building - Window Upgrades

Project No: KS7407000
Drawn By: DT1
Reference:
Date: Nov. 29, 2012

4 Structural

4.1 Overview

This section outlines the structural work required to: verify existing AHU support pads for use with the proposed AHUs, modify pad as required to suit the new AHUs; Install concrete pads for new Plate Exchanger Units; and install concrete pads for the new Cooling Coil Condensate Collection Tanks.

4.2 Codes and Standards

The following codes and standards apply to the scope of work described in this section:

- Massachusetts State Building Code, 8th Edition
- American Concrete Institute (ACI) 301 Specifications for Structural Concrete for Buildings
- ACI 315 Details and Detailing of Concrete Reinforcement
- ACI 318 Building Code Requirements for Reinforced Concrete
- American Institute of Steel Construction (AISC) - Specifications for Design, Fabrication, and Erection of Structural Steel for Buildings, including Commentary and Supplements as issued.
- AISC - Code of Standard Practice for Steel Buildings and Bridges
- Procure a copy of the 1972 set of existing structural drawings and all modification drawings from the Owner before proceeding with any demolition or design.

4.3 Existing Conditions

A.) Available structural drawings are the following:

- Government Center Commission, Office Building, One Ashburton Place, prepared by Hoyle, Doran and Berry , Inc., dated July 3, 1972. Drawing number S1 through S25.
- There is no structural information available below the plaza level of the building.
- Level 7 and 22 are structural steel framed floor with metal deck and concrete fill. See existing drawing S-1 for floor design load and materials.

4.4 Scope of structural work

Scope of structural work, in general, consists of the following.

A.) Removal and Replacement In-Kind of AHUs

- Evaluate size and condition of concrete support pads under existing AHU to be replaced. Remove all anchor bolts to ½" below top of concrete. Pad bolt holes as required with cementitious grout patch.
- Provide new concrete pads for all new pumps, heat exchangers, air handling units and return fans. Dowel in new pad to existing slab.

B.) Concrete Pads for Cooling Coil Condensate Collection Tank.

- New pads to be cast in place concrete. Pads to be doweled into existing roughened floor and reinforced with welded wire fabric.
- Evaluate existing 7th and 22nd floor capacity to support new tanks.

C.) Concrete Pads for New Plate Heat Exchanger.

- New pads to be cast in place concrete. Pads to be doweled into existing roughened floor and reinforced with welded wire fabric.

- Location of the Plate Heat Exchanger has yet to be determined. If located on suspended slab, evaluate existing concrete floor capacity to support new pump and pad.

4.5 Specifications

CONCRETE WORK:

- Cast In Place Concrete (Normal Weight), F'c = 4,000 psi (min), with pozzolans (25%) and admixtures for workability utilizing a w/(c+p) of no greater than 0.38.
- Concrete Admixtures: Air Entraining Agent; Mid-range Water Reducer.
- Reinforcing Steel: ASTM A615, Fy = 60 Ksi.
- Welded Wire Fabric: ASTM A185, flat sheets.

5 Heating, Ventilating and Air Conditioning (HVAC)

5.1 Overview

This Basis of Design (BOD) section describes the scope of work related to heating, ventilation and air conditioning.

The proposed system types, equipment types, and capacities have been estimated as part of these Basis of Design documents. This Basis of Design (BOD) will establish scope and system types as well as describe the scope of work to be provided by the Design Build team. The Design build team, specifically designer of record, is responsible for all final calculations, equipment selections, equipment capacities, coordination, cutting and patching, and final design of system. Final system sizing shall be based on weather data, indoor conditions and code requirements all listed in this BOD.

The final deliverable from the Design Build team shall be to provide final calculations, drawings and submittals. Refer to the general requirements of the BOD for additional information. The equipment sizes, including unit sizing, motor sizing, pipe & ductwork sizing is approximated on the BOD documents and shall be confirmed by the design build team. Increases in these capacities shall be included in the contractors basic services.

5.2 Codes and Standards

The following codes and standards apply to the scope of work described in this section:

- Massachusetts State Building Code, 8th Edition
- International Mechanical Code, 2009
- International Energy Conservation Code, 2009
- ASHRAE 90.1 Energy Conservation Standard, 2010
- ASHRAE 62.1 Ventilation Standard, 2010, Sections 4 – 7
- ASHRAE 55 Environmental Standard , 2010

5.3 Design Criteria

5.3.1 Ambient Weather Criteria

Outdoor (ambient) conditions used for the design (peak load) of HVAC systems will be based on weather data published in the ASHRAE 2009 Handbook of Fundamentals for Boston, Massachusetts. The winter outdoor criterion is based on ASHRAE 99.6 percent (or 0.4 percent) values as listed in the referenced ASHRAE Handbook. The 99.6 percent (or 0.4 percent) values represent conditions that are exceeded, on average, 35 hours per year. Heating "design day" temperature profiles will be based on the most currently available hourly plotted weather data for Boston, MA.

Summer:

- 90.8°F dry bulb
- 76.2°F wet bulb

Winter:

- 7.4°F dry bulb
- Mean Wind Speed of 16.1 mph from 320 degrees (prevailing wind direction coincident with Winter Dry Bulb)

5.3.2 Indoor temperature Design Criteria

Indoor temperature will be maintained with a ±2ºF tolerance as follows:

- Heating – Occupied, 72°F
- Heating – Unoccupied, 65°F
- Cooling – Occupied, 75°F
- Cooling – Unoccupied, None

5.3.3 Building Heating Loads

The heating loads for each building were estimated by KS using the criteria above. The design build team shall provide heating load calculations for each building. These calculations shall be submitted to DCAM for approval.

5.3.4	Equipment Selection	The building heating loads performed by KS were used to approximate equipment capacities and make equipment selections. The design build team shall provide final heating and cooling load calculations for each building. Realized by these calculations, the design build contractor shall provide final equipment selections based on the performance criteria described in the KS documentation.
5.3.5	Acoustical Criteria	Noise will be mitigated to be maintained at (or near) existing noise levels and will comply with all applicable noise statutes.
5.3.5.a	Mechanical Rooms	Will comply with OSHA limits
5.3.5.b	Site	The Massachusetts Building Code requires that new facilities may only increase the existing (prior to construction) site sound level by 9 dBA. There is no statutory maximum permissible sound level requirement at the property line.

5.4 Mechanical Scope of Work

5.4.1	Requirement	Much of the equipment at the McCormack building, including pumps, fans, motors, and air handling units, are both inefficient and beyond their ASHRAE median lifespan. Furthermore, many of the air handlers are constant volume. Most of the systems utilize pneumatic logic and actuation, 3-way valves and constant speed motors. Providing new high efficiency equipment with variable frequency drives (VFD) and 2-way control valves will greatly reduce the energy consumption of the building. Also, providing new DDC controls with electric actuation can further provide additional savings and better system flexibility. Additionally, many other cost saving energy recovery systems will be implemented as a part of this project. Provision for vibration isolation and seismic support will also be required. The Design/Build team is responsible for final design, equipment sizing and selections. Any increase in equipment size shall be provided at no additional cost to project or owner. Design/Build team will complete a walk down survey of the building prior to design.
5.4.2	Existing Conditions and System Upgrades	Below is an overview of the scope of work. Refer to the drawings and specifications for additional information.

Building Name	Existing System	Proposed Upgrades
McCormack	Mixture of variable and constant volume AHUs Mixture of VAV and constant volume control boxes Many AHUs past usable life span Mixture of standard and premium efficiency motors Plate and frame Domestic hot water heat exchangers Mostly constant volume pumps All pneumatic actuation and logic for AHUs and central plant Frozen economizer dampers and actuators AHU-4: PD across ducts in mech room: 8.95” to 7.5”. AHU-5: PD across attenuator 9.5” to 8.5”. PD across round duct to square fire damper 8.1” to	Remove and provide new air handling units in a like-kind replacement (except AHU-10,13, &16). Remove AHU-13 in its entirety and reroute ductwork to other AHU’s. Provide new controls into BAS as shown on drawings. Remove all existing VAV and constant volume boxes. Provide all new VAV boxes and controls. Any recently replaced VAV boxes located on Level 10 shall remain however provide new controls for these existing boxes. Replace 5 HP and greater standard efficiency motors that are 10 years and older with premium efficiency motors. Existing DWHs to remain. Provide new.

	6.5”.	
Building Name	**Existing System**	**Proposed Upgrades**
McCormack (cont.)	AHU-6: PD across damper in duct: 9.5” to 8”. AHU-7 supply duct has bad elbow. PD across elbow 8.3” to 7.9”. AHU-8: PD across damper 7.1” to 5.95”.	insulation for DWHs. Provide new insulation for all Hot water pumps and Chilled water pumps Remove pneumatic actuation and logic for AHUs and central plant and provide new DDC controls. Remove existing AHU dampers actuators and provide new electric and provide new DDC controls Provide new economizer controls Provide CO2 sensors to utilize DCV with an updated DDC controller Provide all necessary components and systems, including but not limited to, pumps, tanks, piping and controls, as required to

		recover AHU cooling coil
Building Name	**Existing System**	**Proposed Upgrades**
McCormack (cont.)		condensate to use for cooling tower make up Replace chilled water 3-way valves with new 2-way valves with DDC control Provide VFDs for secondary chilled water pumps Fans motors 5 HP and greater with VFDs: Remove existing motor pulleys and provide new cogged pulleys and belts Provide all necessary components and systems, including but not limited to, new heat exchangers, pumps, piping, and controls for condenser water heat recovery Install Energy Dashboard in lobby Seal large ductwork in

		mechanical spaces with
Building Name	**Existing System**	**Proposed Upgrades**
McCormack (cont.)		aerosol-sealant Restore control sequences and scheduling to optimize efficiency and control Remove existing pneumatic logic at induction units and provide new DDC controls. Pneumatic actuation to remain with transducers. Provide vacancy sensors for induction units in closed offices Replace pumps with higher efficiency model Replace all CHW piping between AHUs and 3-way control valves Provide condenser water temperature relief and cooling tower blowdown

Building Name	**Existing System**	**Proposed Upgrades**
McCormack (cont.)		reduction Provide pressure differential control to monitor main vertical ductwork in shafts Replace Return fans (expect RF-10 and -13) with higher efficiency model. Remove RF-13 in its entirety. Provide new equalizer line for cooling towers Replace existing ductwork fittings which are causing high pressure drops. Refer to AHU pressure profile in appendix for additional information.

5.4.3 System Description

5.4.3.a New DDC Controls

Modifications to remove all pneumatic actuators and controls and provide new DDC controls with electric actuators will include the following:

- Demolition Work
    - Remove existing pneumatic actuators as described above (dampers and valves)
    - Remove pneumatic control panels
    - Existing air compressors to remain
- New Construction Work
    - Provide new DDC controls with electric actuators, controls as shown on drawings, and power wiring as required. Existing valves and dampers may be reused if they are found to be in good operating condition and ample capacity. Otherwise, provide new control valves and dampers

5.4.3.b New AHU DDC Controls

Modifications to provide the new air handler (AHU) controls will include the following:

- Demolition Work
    - Remove all existing pneumatic actuators as described above (dampers and valves)
    - Remove all pneumatic tubing associated with AHUs
    - Remove all pneumatic control panels
- New Construction Work
    - Provide new DDC controllers
    - Provide new electric actuators
    - Provide control points and sequence of operations as shown on

drawings

- Existing valves and dampers may be reused if they are found to be in good operating condition and ample capacity. Otherwise, provide new control valves and dampers

5.4.3.c New Air Handling Units and Return Fans

Modifications to provide the new air handling unit (AHU) and return fan (RF) for will include the following:

- Demolition Work
    - Remove existing AHU in its entirety.
    - Remove existing RF in its entirety.
    - Remove chilled water piping and pipe accessories to back to bypass (including bypass piping).
    - Hot water piping & pipe accessories are existing to remain.
    - Remove existing housekeeping/inertia pad.
    - Remove ductwork on Level 7 as shown on drawings.
    - Existing freeze protection pumps shall remain. Test existing pumps and report findings.
    - Remove sections of ductwork as required to connect new AHU's and return fans to existing supply, return and outside air ductwork.
    - Remove sections of ductwork as required to install/rig new AHU's and return fans

- New Construction Work

    - Contractor is required to provide conditioning of the building during the AHU replacement. The temporary system shall be able to maintain current operating conditions.

    - Provide new AHU with capacities indicated in Appendix A.7. Design/build team shall confirm capacities of all AHU's and return fans and submit calculations to DCAM for review and approval. However, the scope of work for the contractor shall be to provide the airflows of the AHU's and return fans as shown on the drawings shall be provided. The selections on the drawings are preliminary and any changes in coil sizes and motor sizes shall be included in the contractor scope of work at no additional cost to the project.

    - Provide new RF (provide new mixed flow type RF's). New return fans shall meet the airflow requirements as shown on the drawings. The selections on the drawings are preliminary and any changes in motor sizes and fan sizes shall be included in the contractor scope of work at no additional cost to the project.

    - Supply and return fan motors shall be NEMA premium efficiency inverter duty with variable frequency drives (VFD) and cogged belts and pulleys.

    - Provide new housekeeping pad.

    - Provide low pressure drop pre (MERV-8) and primary (MERV-15) filters. Pre-filters shall have $\leq$ 0.25" w.c. pressure drop (clean) at 500 FPM and final filters shall have $\leq$ 0.4" w.c. pressure drop (clean) at 500 FPM.

    - Route chilled water piping to AHU (if applicable). Provide transitional piping as required. Provide new piping accessories as shown on drawings. Replace damaged or highly rusted piping and replace with

new.

- Provide transitional ductwork as required to connect to existing ductwork. Provide new ductwork as required to rig/install new AHU's. Provide duct insulation for all new ductwork and ductwork exposed as a result of AHU and RF installations.

- Provide new ductwork on Level 7 as required. Refer to Appendix A.8 for guidance on ductwork modifications. Final design and duct layout shall be by the design build team.

- Provide DDC controls and tie into BAS. Interlock return fans to their associated AHU.

- Provide new front end computer as part of BAS upgrade, which will integrate with the existing BAS that controls AHU-10 and Chiller 6.

- Interlock AHU controls with the associated return fan.

- Provide control points and sequence of operations as shown on drawings.

- Refer to drawing for quantity and locations of new air handling units and return fans.

- Provide rigging plan for installation procedure of new AHUs.

- Provide new duct work and fittings in mechanical rooms as required, based on pressure profile, to reduce duct static pressure and be under the maximum static pressure rating of ductwork. Refer to Appendix A.7 for pressure profile, airflows from pre-balancing test and new airflows.

- Provide pre-balancing for all hydronic and air associated with the existing induction units and VAV boxes. Once the AHU conversion is complete, provide testing and balancing to ensure adequate flow rates at AHU's,

VAV's and induction units as shown on the original building drawings.

- All new valves on level 7 should be sized for 250psi of pressure.
- Unit shall ship broken down on pallets that will fit in building elevator. Unit shall be re-assembled in the mechanical rooms by factory authorized technicians.

5.4.3.d Premium Efficiency Motors

Replacing motors will include the following:

- Demolition Work
  - Remove existing motor in its entirety
  - Existing motor support structure to be reused if possible
- New Construction Work
  - Provide new NEMA premium efficiency motor. Minimum full-load nominal efficiency shall be in accordance with NEMA MG 1-2006, Table 12-12.
  - Motor horsepower shall match existing.
  - Addition requirements for fan motors with VFDs: motors shall be inverter duty. Provide new cogged pulleys and belts. Number of belts and pulleys to match existing.

5.4.3.e Cooling Coil Condensate Recovery

Modifications to recover cooling coil condensate will include the following:

- Demolition Work
  - None

- New Construction Work
    - Provide new piping from AHU cooling coil condensate drain to new condensate pump and to condensate storage tank.
    - Provide new pumps, storage tanks and controls as required. Controls shall be tied into BAS.
    - Equipment sizes, capacities and flow rates shall be determined by design engineer.

5.4.3.f Condenser Water Heat Recovery

Modifications to provide condenser water heat recovery will include the following:

- Demolition Work
    - None
- New Construction Work
    - Provide heat exchangers to preheat domestic hot water using the condenser water from the chilled water plant.
    - Provide new plate and frame heat exchangers. Capacity and quantity of heat exchangers shall be determined by Design/Build team.
    - Heat exchanger shall be rated for domestic water use.
    - Provide recirculation pumps, piping, and controls as required for both condenser water and domestic hot water. Controls shall be tied into BAS.
    - Design/Build team shall provide final calculations for equipment sizing.

5.4.3.g Variable Frequency Drives

New variable frequency drives for air handlers and pumps will include the

following:

- Demolition Work
    - None
- New Construction Work
    - Provide new VFD for motor
    - Controls shall be tied into AHU (if applicable) and BAS

5.4.3.h VAV Boxes

Replacement of VAV and constant volume control boxes

- Demolition Work
    - Remove box and controls in their entirety.
    - Recently replaced VAV boxes on Level 10 shall remain and their logic shall be removed.
    - Remove existing thermostat. Abandon pneumatic tubing in place.
- New Construction Work
    - Refer to existing drawings of each building for quantities of VAV boxes
    - Provide new VAV box and controls.
    - Provide new DDC thermostat. Run controls wiring in wiremold on wall up through ceiling. Mount thermostat in existing location.
    - Provide transitional ductwork as required. New ductwork shall match size and material as existing. Provide insulation for all new ductwork and any ductwork exposed as a result of installation. All new ductwork shall be

sealed per SMACNA standards.

- VAV peak capacities shall be confirmed by design/build team as adequate for cooling/heating requirements of the space served.
- Patch any ceiling or walls affected by installation. Paint to match existing color. Any damaged ceiling tiles shall be replaced at no cost to project/owner.

5.4.3.i DCV/CO2 sensors

New CO2 sensors and DDC controls upgrade for Demand Control Ventilation will include the following:

- Demolition Work
  - None
- New Construction Work
  - Provide new CO2 sensors for each AHU in the return air duct.
  - Interlock controls with BAS
  - AHUs shall modulate their outdoor air damper as required in response to changing CO2 levels.

5.4.3.j Economizer Controls

Modifications to provide the economizer controls will include the following:

- Demolition Work
  - The existing outside air ductwork is sized for 100% outside air. Remove all pneumatic actuators, controls and dampers.

- New Construction Work
    - Provide new electric actuators, control logic as described in the control drawings, and dampers.
    - Provide new intake plenum and louvers as required.
    - Interlock controls with BAS and AHUs
    - Repair dampers as require to ensure operation

5.4.3.k New Pumps

Modifications to provide pumps will include the following:

- Demolition Work
    - Remove existing pump in its entirety.
    - Remove existing pump motor, controls, pump stand, and pneumatic tubing associated with the pump
    - Reuse existing freeze pumps
- New Construction Work
    - Provide new pump in like-kind replacement.
    - Provide new 4-pole NEMA premium efficiency motor.
    - Interlock new DDC controls with BAS.
    - Provide inertia pads and vibration isolation systems as required.
    - New secondary chilled water pumps shall be supplied with variable frequency drives. These motors shall also be inverter-duty motors.

- Provide transitional piping as required.

5.4.3.l Insulate Pumps and Domestic Hot Water Heat Exchangers

Modifications to provide new insulation for pumps and domestic hot water heat exchangers will include the following:

- Demolition Work
  - None
- New Construction Work
  - Provide new 2” fiberglass insulation for chilled and hot water pumps and domestic hot water heat exchangers.
  - Provide removable areas of insulation as required for access to equipment. Access panels shall be outlined and labeled permanently as such.
  - Provide a rigid backing for insulation. Insulation shall be permanently attached to the backing.

5.4.3.m AHU Chilled Water 2-way Valves

Modifications to provide new 2-way valves will include the following:

- Demolition Work
  - Remove existing 3-way valve. Cut and cap bypass leg.
- New Construction Work
  - Provide new electric 2-way valve. Tie controls into AHU and BAS. Provide transitional piping and fittings as required.
  - Provide new insulation for all new piping and any affected insulation as

part of the valve replacement.

5.4.3 n Condenser Water Temperature Relief

Condenser water temperature relief will include the following:

- Demolition Work
    - None
- New Construction Work
    - The Design Build team shall work with chiller and cooling tower manufacturers on condenser water temperature reduction requirements and ways to reduce cooling tower blowdown.

5.4.3.o Energy Dashboard System

Installation of new energy dashboard kiosk in building lobby will include the following:

- Demolition Work:
    - The existing information kiosk may be reused or replaced as required to meet the specifications listed herein.
- New Construction Work:
    - Provide an interactive Sustainability Management System (SMS) that uses historical trend data building systems data to educate users about the building's energy and resources use as well as the high performance features.
    - The user interface shall incorporate intuitive animated graphics and user interaction to engage a wide primarily non-technical audience via both touch-screen displays and PC web browser.

- The SMS Hardware shall consist of a web page server computer and touch-screen display units. Repurpose existing computer in lobby to function as web page server.

- Provide the various sensors and meters to be installed in the building and be connected to the Building Management System (BMS) for purposes of tracking several parameters of the building's overall environmental and energy performance. These parameters include electricity use, water use, natural gas used, Chiller / Boiler / Fan / Pump performance, etc.

- Provide all resources required to develop, configure, startup and test the digital interface between the SMS controller and the BMS to monitor building performance operating parameters.

- Basis of design shall be Lucid Building Energy Dashboard Kiosk or similar.

5.4.3.p Aerosol Duct Sealant

Application of aerosol duct sealant in mechanical ducting systems will include the following:

- Demolition Work:

  - None.

- New Construction Work:

  - This ECM applies to all major ductwork located in the mechanical rooms, specifically all supply and return ductwork with a cross sectional area of 6 SF or greater.

  - Block all fans, coils and any equipment connected to the mechanical supply and return ducting systems with foam plugs.

  - Pressure test ductwork to rating of ducts. Seal ducts as required to meet

SMACNA leak requirements.

- Remove all foam plugs and restore system to existing state after aerosol coating process of mechanical room ducting is complete.
- Basis of design shall be Aeroseal duct sealant or similar.

5.4.3.q Induction Unit Local Control

Installation of new local controls and vacancy sensors for induction units will include the following:

- Demolition Work:
  - None
- New Construction Work:
  - All induction units shall be pre-balanced prior to AHU replacement. Representative sampling will not be permitted.
  - Provide vacancy sensors in closed offices for induction units. Vacancy sensor will require manual activation of induction unit by occupant. Once occupant leaves the office, sensor will detect no motion and turn off induction unit after pre-determined time period.
  - Provide local temperature control thermostat for induction units. In closed offices, combine multiple induction units to one thermostat. In open offices, combine no more than 9 induction units to one thermostat.
  - Provide wiring to controls and sensors as required.
  - The existing pneumatic actuators shall be reused. Provide new electric to pneumatic transducers at each actuator.
  - Thoroughly clean and recondition existing induction units, which includes cleaning coils and grilles.

5.4.3.r Cooling Tower Equalizer Line

Installation of new equalizer line for cooling towers will include the following:

- Demolition Work:
  - None
- New Construction Work:
  - Provide new equalizer line (10" PVC) for cooling towers, with isolation valve and heat tracing.

5.5 Testing and Balancing

5.5.1 Testing, adjusting, and balancing (TAB) shall be provided for HVAC ductwork systems and hydronic heating and cooling systems. Air balancing shall not be performed until after the successful completion of the building envelope sealing and performance testing indicated in Part 15. See the Technical Outline Specifications below for additional requirements.

5.6 Specifications

5.6.1 PIPING AND FITTINGS

A. General

1. Pipe materials and fitting materials shall be as indicated in Schedule of Pipe and Fitting Materials.

B. Schedule of Pipe and Pipe Fitting Materials

SERVICE	SYSTEMS DESCRIP-TION	PIPE SIZE	PIPE MATERIAL	JOINTS	FITTING MATERIAL	FITTING RATING PSI/CLASS/ WEIGHT
Hot Water	HWS/R CWS/R	2" and under 2-1/2" and over	Copper, B88, Type L or Steel A53, Grade B, Smls or ERW, Schedule 40 Steel A53 Grade B, Smls or ERW Schedule 40 Standard	Soldered 95/5 Tin/ Antimony Threaded Butt Welded or Mechanical grooved piping system	Wrought copper, B16.22 Malleable Iron, B16.3 Wrought Steel, A234 Grade WPB Or Ductile iron grooved end fittings	Class 150 Class 150 Standard Weight
Fuel Oil (Inside) Equipment Drains Chemical Feed	FOS/R D CF	2" and under 2-1/2" and over	Copper, B88, Type L or Steel A53, Grade B, Smls or ERW, Schedule 40 Steel A53 Grade B, Smls or ERW Schedule Standard	Soldered 95/5 Tin/ Antimony Threaded Butt Welded	Wrought copper, B16.22 Malleable Iron, B16.3 Wrought Steel, A234 Grade WPB	Class 150 Class 150 Standard Weight
Condensate Drain	CD	All	PVC, Schedule 40 Note 1	Solvent Welded	PVC, Sched-ule 40	Class 150
Cold Water	CW	All	Copper, B88, Type L	Soldered 95/5 Tin Antimony	Wrought Copper, B16.22	Class 150
Vents	V	All	Galv. Stl., A53 or A120, Smls or ERW, Schedule 40	Threaded	Galv. Malleable Iron, B16.3	Class 150

Note 1: Use copper for drain lines in plenums and through fire rated walls. Copper tubing must be insulated for 12' from equipment.

5.6.2 Connections

A. Provide dielectric fittings at connections of dissimilar materials.

B. Provide eccentric reducing couplings to bring pipes flush on top for water service and flush on bottom for steam service.

C. Branch lines in welded piping shall be made with welding tees except that branch lines less than one-half diameter of main may be made with Weld-O-Lets or Sock-O-Lets.

D. Nipples shall be same material, make and thickness as pipe with which they are used. Close nipples shall not be used.

E. Make piping connections 2-1/2" diameter and larger to valves and equipment with welding neck flanges, ANSI B16.5, pressure rating to match system, flat or raised face as required.

F. Make piping connections 2" dia. and smaller to valves and equipment with steel body, 300 psi brass seat unions on steel piping and with heavy semi-flushed brass unions on copper tubing.

G. Fit flanged joints with Johns-Manville or approved equal full face gaskets. Flanges shall be faced and drilled to ASA standards and fitted with semi-finished hexagon machine bolts and nuts of proper number and size.

H. Make screw joints tight with Teflon (polytetrafluoroethylene) tape or litharge-glycerin mixture applied to male threads. Use tapered threads.

I. Make fusion welded joints as required by ANSI B31.1. Make changes in direction of pipe with welded fittings only. Bevel connections before welding, mechanically or by flame-cutting.

J. Cathodic Protection

1. Provide a system of cathodic protection to protect all underground steel natural gas piping. It shall be the contractor’s responsibility to secure the services of a NACE certified, registered professional engineer in the field of corrosion protection to design and detail specific requirements of the project.

2. Products and requirements for the protection system shall be as set forth by the corrosion engineer. Installation of system shall be as required by corrosion engineer in accordance with equipment manufacturer's published installation instructions, and with recognized industry practices.

3. Cathodic protection product submittal shall be stamped with the seal of corrosion engineer and signed by him. Submittals shall include but not be limited to: construction details of cable connections to piping and other field connections, test station details, methods of coating and wrapping pipes, complete wiring

diagram of system and maintenance instructions. Provide site plan showing runs of piping to be protected, test station locations and sacrificial anode locations.

K. Grooved Piping System

1. Grooved Piping

a. Grooved couplings may be used in lieu of welding, threaded or flanging on 2 1/2" and over carbon steel pipe, on water services from - 30 F. to 230 F. within the manufacturer's rated working pressures. Pipe grooving shall be cut grooved and/or rolled grooved as per manufacturer's latest recommendations.

2. Piping Components

a. Grooved couplings shall consist of two or more pieces of ductile or malleable iron. Coupling gaskets will be a synthetic rubber gasket with a central cavity pressure responsive design. Coupling bolts and nuts shall be heat treated carbon steel, trackhead conforming to physical properties of ASTM-A-183. All grooved couplings shall be manufactured by Victaulic Co. Style 77 or 07 or equal. Flexible couplings may be used with the Designer’s approval as outlined in the Pipe Hanging paragraph of this Alternate.

3. Branch Connections

a. For piping 2 1/2" and larger, full size branch connections shall be made with manufactured grooved end tees. Branch connections for less than full size shall be made with Victaulic hole cut products or equal. Branch connections with locating collar engaging into hole or outlet coupling used to join grooved pipe and to create a branch connection.

4. Gaskets

a. All gaskets shall be Victaulic Grade "E" or equal EPDM compound with working temperature of -30°F to 230°F.

5. Flanges

a. Flanges shall be Vic-Flange Style 741 (2-24") or equal for connection to ANSI class 125 and 150 flanged components, or Vic-Flange Style 743 or equal (2" - 12") for connection to class 300 flanged components.

6. Fittings

a. Fittings shall be full flow cast fittings, steel fittings or segmentally welded fittings with grooves or shoulders designed to accept grooved end couplings.

b. Standard Fittings - shall be cast of ductile iron conforming to ASTM A-536 (Grade 65-45-12) or malleable iron conforming to ASTM A-47, Grade 32510, painted with a rust inhibiting modified vinyl alkyd enamel or hot-dip galvanized to ASTM A-153 or zinc electroplated to ASTM B-633, as required.

c. Standard Steel Elbow Fittings - (14" - 24") shall be forged steel conforming to ASTM A-106 Grade B (0.375" wall), painted with rust inhibiting modified vinyl alkyd enamel or hot-dip galvanized to ASTM A-153.

d. Standard Segmentally Welded Fittings - shall be factory fabricated, by fitting manufacturer, of carbon steel pipe as follows: 3/4" - 4" conforming to ASTM A-53, Type F;5" - 6" Sch. 40 conforming to ASTM A-53, Type E or S, Grade B; 8" - 12" Sch. 30 conforming to ASTM A-53, Type E or S, Grade B; 14" - 24" O.375" wall conforming to ASTM A-53, Type E or S, Grade B, painted with rust inhibiting modified vinyl alkyd enamel or hot-dip galvanized to ASTM A-153, as required.

7. Valves, Strainers, Suction Diffusers

a. Vic 300 grooved end butterfly valve or equal may be used for all services up to and including 300 PSI. Valve body shall be ductile iron with grooved ends designed to accept grooved mechanical couplings. Valves shall have ductile iron disc core with integrally cast drive hub and bonded resilient coating molded onto the disc. Disc seal (EPDM) shall be rated for service up to 230°F.

b. Ball Valves shall be Vic Ball style 721 or equal Ball Valves, designed for 600 PSI (WOG) bubble tight working pressure.

c. Check Valves Single Disc, non-slamming, spring loaded check valves with a welded in nickel seat. Ductile iron body and disc designed for 300 PSI. Installed in the vertical and horizontal positions. Style 716, 779.

d. Strainer shall be Victaulic Style 732 or Wye Pattern Strainer for easy access and cleaning with grooved ends for installation in vertical down flow or horizontal flow position.

e. Suction Diffuser shall be Victaulic Style 731 or equal. Ductile iron body conforming to ASTM A-536. Diffuser stainless steel type 304 frame and perforated sheet with 3/16" diameter holes.

8. Hanging and Installation

a. All grooved components installed and requirements for hanging, supporting, anchoring, expansion and contraction shall be in accordance with the latest published manufacturer's instructions.

b. Pressure and temperature ratings shall be as shown in manufacturer's latest published literature for individual style of coupling and gasket. Pressure and temperature ranges for valves shall conform to those in valves paragraph in Part Two of this specification.

c. Grooved Pipe Hanging:

1) Rigid piping systems, using Style 07 Zero Flex couplings or equal, shall be supported as shown on drawings, as called for in Part Two of these specifications and as called for by the ASME Building Services Piping Standard B-31.9.

2) Piping systems using Style 77, other flexible Victaulic couplings or equal may be used if explicitly approved by Designer. The contractor shall submit a schematic piping diagram to the Designer. The diagram shall show all points of anchorage, where flexible type couplings are used and where rigid couplings are used. The diagram shall show expansion joints (if any).

5.6.3 VALVES AND STRAINERS

A. Valves on hot water and fuel oil services shall be 125 psi unless noted otherwise. Pressure ratings of valves for steam and condensate services shall be as specified.

B. Valves shall have name of manufacturer and guaranteed working pressure cast or stamped on bodies. Valves of similar type shall be by single manufacturer. Provide chain operators for valves 7 feet and higher above floor.

C. Provide butterfly valves for shutoff on chilled, hot and condenser water services 2-1/2" and larger. Do not use butterfly valves for balancing service.

1. Valves shall be rated 175 psi maximum working pressure, iron body, threaded-lug with resilient EPDM seats, bronze disc and 416 stainless stem, by Centerline, DeZurik, Keystone, or Bray.

2. Valves 6" and larger shall have gear or chain operators.

3. Valves smaller than 6" shall have seven-position lever or chain operators.

4. Test valves at 110% of rated pressure.

D. Provide bronze-body ball valves with reinforced teflon seats, seals, bearings and packing. Ball valves shall be used for chilled, hot and condenser water services in sizes 2" and smaller. Do not use ball valves for balancing service. Valves on insulated piping shall have 2" extended stems. Valves shall be by Apollo, Cannon, Nibco, Milwaukee, or Watts. Valves shall be rated 600 psi wog.

E. Provide globe valves for balancing and throttling steam and medium pressure condensate services by Crane, Jenkins, Milwaukee, Stockham or Walworth as follows:

1. Valves 2-1/2" and larger shall be iron body, flanged ends, bronze mounted, outside screw and yoke, renewable seat.

2. Valves 2" and smaller shall be bronze body, screwed ends, bronze trim.

3. Valves shall be ANSI B16.5 rated for (150) (300) pound service.

F. Check valves sized 2-1/2" and larger shall be iron body, flanged ends, bronze mounted, swing pattern. Check valves 2" and smaller shall be bronze, screwed ends, swing pattern. Check valves for hot water, chilled water and condenser water pump discharge shall be spring loaded, silent check, by APCO, Milwaukee, Mueller or Stockham.

G. Relief valves shall be brass with external lever, ASME-approved. Pipe discharge to floor drain with open connection at floor. Pipe chiller refrigerant relief devices through roof to atmosphere.

H. Provide gate valves for shut-off on steam and steam condensate services by Crane, Jenkins, Milwaukee, Stockham or Walworth as follows:

1. 125 psi steam working pressure valves shall have iron bodies, and silicon brass stems. Valves 3" and smaller shall have solid bronze wedges, Valves larger than 3" shall have solid iron wedges with bronze face rings. Valves 2" and under shall be threaded, valves 2-1/2" and over shall be flanged.

2. 250 psi steam working pressure valves 2" and under shall be bronze body with silicon brass stems and solid bronze wedges. Valves shall have threaded connections. 250 psi SWP valves 2-1/2" and over shall be iron body, iron wedges with bronze face rings and have flanged connections.

3. Valve shall have rising stems.

4. Packing materials shall be non-asbestos.

I. Strainers

1. Strainers 2" and smaller shall be 250 lb. bronze body, stainless steel, screen with 20 mesh screen opening, Y-pattern, screwed ends, Sarco Type BT, Mueller, Watts or Armstrong.

2. Strainers 2-1/2" and larger shall be 125 lb., cast iron body, stainless steel screen with manufacturer's recommended screen openings, Y-pattern, flanged, Sarco Type AF-125 or equivalent by Mueller, Watts or Armstrong.

3. Provide blow-off valve on each strainer.

4. Pump suction strainers 2" and smaller shall have 0.062 screen openings. Pump suction strainers 2-1/2" and larger shall have 0.125 screen openings.

5. Strainer gaskets shall not contain asbestos.

J. Provide threaded vacuum breakers with ball, spring, O-ring flexible seat, and screen. Ball shall be 440 stainless steel; seat shall be EPR. Spring shall be 316 stainless steel; screen and cap shall be 304 stainless steel and threaded collar shall be 416 stainless steel. Body shall be brass. Vacuum breakers shall be Johnson Series VB8 size 1-1/4 IPS, or equivalent by Watts or ITT Hoffman.

K. Provide unions for threaded end valves to facilitate removal from pipe.

L. Suction Diffusers

1. Suction diffuser/strainers shall have 200 psi cast iron body and stainless steel strainer with 5/32" perforations. Units shall include flanged connections, removable gasketed cover and straightening vanes. Diffusers shall be Taco, B&G or Mueller.

2. Provide 16 mesh start-up strainer.

3. Provide blow-off tapping on bottom of unit.

4. Provide full size inlet and outlet.

M. Combination Balancing/Flow Measurement/Shut-off Valves

1. Valves shall be Y-pattern style with multi-turn hand wheel.

2. Valves shall be capable of being installed in any direction without affecting flow measurement and shall provide the following functions:

a. Precise flow measurement.
b. Precision flow balancing.
c. Positive shut-of with no drip seat.
d. 3/4" drain port suitable for hose bib fitting. (Sizes 2" and below.)

3. Valves shall have four, 360º adjustment turns (2" and below), eight, 360O adjustment turns (2-1/2" - 6"), twelve, 360° adjustment turns (8", 10"), and sixteen, 360° adjustment turns (12"). Handwheels shall have digital indicators with hidden memory and tamper-proof setting features.

4. Valves 2" and below shall be non-ferrous, pressure die-cast, non-porous Ametal copper alloy, with soldered ends.

5. Valves 2-1/2" and over shall be ductile iron body with all other metal parts of non-ferrous copper alloy. End connections shall be flanged or grooved.

6. Pressure ratings shall be 300 psi for 2" and below and 250 psi for flanged and 300 psi for grooved ends.

7. Each valve shall have pressure/temperature readout ports with EPDM seals and attached shut-off valves.

8. One, computerized hand-held, balancing meter shall be furnished to the DCAM Project Manager. The Testing and Balancing Contractor shall utilize this instrument for his work. The meter shall include the following:

   a. Flow measurement direct in GPM.
   b. Differential pressure measurement.
   c. Temperature measurement.
   d. Automatic calibration.
   e. Automatic air purging.
   f. Extended data logging functions.

9. Balance valves 2" and under shall be TA Hydronics Model STAS. Valves 2-1/2" and over shall be TA Hydronics Models STAF-SG or STAG. The handheld meter shall be TA Hydronics Model CBI with PCB data logging features. Balance valves manufactured by Armstrong or Victaulic shall be considered equivalent.

5.6.4 PIPE INSULATION

A. Insulation shall be fibrous glass insulation with factory-applied fire retardant vapor barrier jacket with K factor of 0.21 at 75°F mean temperature: by Owens Corning, Certain-Teed, Manville or Knauf, installed as required by manufacturer. ASTM E-84 fire hazard ratings shall be 25 flame spread, 50 smoke developed and 50 fuel contributed.

B. Apply insulation after systems have been tested, proved tight and approved by Designer. Remove dirt, scale, oil, rust and foreign matter prior to installation of insulation.

C. No leaks in vapor barrier or voids in insulation will be accepted.

D. Insulation and vapor barrier on piping which passes through walls or partitions shall pass continuously through sleeve, except that piping between floors and through fire walls or smoke partitions shall have space allowed for application of approved packing between sleeves and piping, to provide fire stop as required by NFPA. Seal ends to provide continuous vapor barrier where insulation is interrupted.

E. Insulate flexible connections to same thickness and with same material as adjoining pipe insulation.

F. Provide fibrous dual temperature insulation with factory applied vapor barrier jacket on steam, outdoor condenser water, outdoor cooling tower drain and makeup, condensate, chilled water, drain, hot and cold water piping, unless noted otherwise.

G. Drain piping other than PVC piping and outdoor cooling tower drain piping shall have ½" thick insulation. Insulation thickness for indoor steam, steam condensate, chilled water, hot water and cold water piping shall be as follows:

TABLE A Insulation Thickness

PIPING SYSTEM TYPES	FLUID TEMPERATURE RANGE, °F	1" & LESS	1-1/4" TO 2"	2-1/2" TO 4"	INSULATION CONDUCTIVITY BTUH/IN/F.HR.SF AT TEMP ºF

HEATING SYSTEMS

Steam & Hot Water

High press./temp.	351-450	2.5	2.5	3.0	0.32 @ 250ºF
Med. press./temp.	251-350	2.0	2.5	2.5	0.29 @ 200 ºF
Low press./temp.	201-250	1.5	1.5	2.0	0.27 @ 150 ºF
Low temp.	141-200	1.5	1.5	1.5	0.25 @ 125 ºF
Low temp.	105-140	1.0	1.0	1.0	0.24 @ 100 ºF
Steam Condensate	Any	1.5	1.5	2.0	0.27 @ 150 ºF
(for feed water)					

PIPING SYSTEM TYPES	FLUID TEMPERATURE RANGE, ºF	5" TO 6"	8" AND LARGER	INSULATION CONDUCTIVITY BTUH/IN/F.HR.SF AT TEMP ºF
HEATING SYSTEMS				
Steam & Hot Water				
High press./temp.	351-450	3.5	3.5	0.32 @ 250 ºF
Med. press./temp.	251-350	3.5	3.5	0.29 @ 200 ºF
Low press./temp.	201-250	2.0	3.5	0.27 @ 150 ºF

Low temp.	141-200	2.0	2.0	0.25 @ 125 ºF
Low temp.	105-140	1.5	1.5	0.24 @ 100 ºF

H. Insulation for prefabricated piping specified in Preinsulated Piping Paragraph shall be cellular glass of 1-1/2" thickness for chilled water and 2-1/2" for hot water, Foamglas by Pittsburgh Corning or approved equal, with maximum K-factor of 0.35. Insulation shall meet applicable requirements of this Paragraph.

I. Provide longitudinal lap and 6" wide vapor barrier joint seal strips secured with approved adhesive.

J. Seal ends of pipe insulation and seal insulation to pipe with approved fire retardant vapor barrier, at flanges, valves and fittings and at intervals of no more than 21 feet on continuous runs of piping.

K. Secure covers on concealed pipe with metal bands at least 3/4" wide and no more than 18" apart, spaced to hold ends and centers of each section.

L. Do not insulate indoor condenser water systems. Provide 2" insulation on outdoor condenser water piping, only if heat traced.

M. Outdoor Pipe Insulation and Water-proofing

1. Provide 1" thick flexible unicellular elastomeric foam rubber tubing insulation by Armstrong (Armaflex), Manville, Owens Corning or Halstead/Nomaco (Insultube), with maximum K-factor of 0.27. Install as recommended by manufacturer.

2. Insulate valves and fittings with same thickness insulation as duct using manufacturer's pre-formed fitting and valve insulation or field-fabricated covers made with manufacturer's templates.

3. Adhere insulation to duct and seal butt joints with full coverage of insulation manufacturers approved adhesive.

4. Apply two coats of finish material to insulation.

5. Apply two coats of approved vinyl lacquer coating over woven glass yarn mesh adhered to insulation surface with Insulcolor or approved equal lagging adhesive.

6. Provide cork or dowel supports and metal shields at pipe hangers and supports as recommended by manufacturer.

N. Insulation on Fittings, Valves and Flanges

1. Fittings, valves and flanges shall be insulated with pre-cut, factory-supplied fibrous glass, by Certain-Teed, Knauf, Owens Corning or Manville.

2. Fittings, valves and flanges shall be insulated with same material and to same thickness as adjoining pipe insulation.

3. Pipe fittings shall be pre-tested, clean and dry before insulation.

4. Installation of insulation on fittings shall be as follows, in order:

   a. Wrap insulation around fitting and tuck ends into fitting throat.

   b. Edges of adjacent insulation shall be tufted and tucked in, to fully insulate fitting to thickness of adjacent pipe insulation. Use two or more thicknesses if necessary.

   c. If two layers of insulation are used on fittings, wrap and secure first layer with twine before applying second layer.

   d. Top layer of insulation shall be covered with one piece, PVC, Zeston molded fitting cover. Secure cover with stainless steel tack fasteners inserted into jacket throat overlap seam.

   e. Tape joints with pressure-sensitive vapor barrier tape; tape shall extend 2" on either side of joint.

5. Prior to taping of joints on chilled water lines, apply vapor barrier mastic (brushed on) to fitting cover, throat overlap and edges. Also apply vapor barrier mastic to pipe insulation jacket ends.

6. For strainers and other valves or fittings which need maintenance, provide preformed removable insulation section.

5.6.5 PIPE HANGERS AND SUPPORTS

A. Provide pipe stands, supports, hangers and other supporting devices in accordance with ANSI B31.9 and MSS-69, as necessary to support work required by Contract Documents.

B. Secure vertical piping to building construction to prevent sagging or swinging.

C. Space hangers for horizontal piping as follows:

Pipe Size	Rod Diameter	Maximum Spacing
Up to 1-1/4"	3/8"	8 ft.-0"
1-1/2 and 2"	3/8"	10 ft.-0"
2-1/2 and 3"	½"	10 ft.-0"
4 and 5"	5/8"	12 ft.-0"
6"	3/4"	12 ft.-0"
8" and over	7/8"	12 ft.-0"

D. Horizontal copper tubing shall have maximum hanger spacing of 5 ft. for tubing 1-1/4" dia. and smaller and 10' for tubing 1-1/2" and larger. Maximum spacing for PVC pipe hangers shall be 4'.

E. Reduce spacing to a maximum of 10'- 0" apart, regardless of pipe size, as necessary for fittings, valves and other concentrated loads.

F. Support piping 4" dia. and larger from structure with pipe roll hangers with adjustable steel rod hangers, sized to accommodate insulation.

G. Support piping 3" dia. and under from structure with Carpenter and Patterson Fig. 100 clevis hangers or approved equal.

H. Hangers shall be by Carpenter and Patterson, F & S, or Grinnell Co. Figure numbers of Carpenter and Patterson are specified to establish standards of quality for performance and materials.

I. Provide spring hangers with travel stops as specified in Vibration Isolation Paragraph where necessary and where shown on Drawings.

J. Pipe supports for 4" and larger pipe and insulated high-temperature piping shall have welded inserts of equal thickness to insulation to prevent compression of insulation. Other insulated pipe shall have 12", 14 GA shields at hangers, composed of 180°coverage of galvanized sheet metal and high density, pre-formed, rigid insulation. Where rollers are required, shield shall be steel pipe.

K. Hangers for horizontal lines shall be vertically adjustable to obtain pitch requirements of Piping Paragraph.

5.6.6 SLEEVES AND PENETRATIONS

A. Pipe Sleeves

1. Sleeves through floors and through exterior, structural and fire-rated construction shall be hot-dipped galvanized Schedule 40 steel pipe.

2. Sleeves through partitions and non-fire-rated construction shall be 26 gauge galvanized steel with lock longitudinal seams, or approved plastic pipe.

3. Provide waterproofing membrane locking devices at floors. Provide 150 lb. slip-on welding flanges at exterior wall penetrations.

B. Pipe Sleeve Packing

1. Packing between the pipe and the sleeve (or wall or slab opening) in fire rated walls or slabs shall be a combination of fireproof insulation and fireproof caulk. The combination of materials shall have the same fire rating, in hours, as the wall or slab, as tested in accordance with the latest edition of ASTME-814 (UL 1479). The combination of materials shall be classified by UL, (fill, void or cavity materials) for the fire rating required and shall be listed as a numbered system in the UL Fire Resistance Directory. Fiberglass shall not be used as the insulation material.

2. Acceptable fireproof insulation materials shall be: Kaolin (Kaowool by Babcock and Wilcox); ceramic fiber blanket (Fiberfrax by Standard Oil) or fire rated mineral wool (Thermafiber by USG). Acceptable fireproof caulks shall be: Silicone (Firestop by Dow Corning, Hilti CS240); ceramic fiber (Fyreputty by Standard Oil) or intumescent synthetic elastomer (Fire Barrier Caulk by 3M, Hilti CS2420).

3. Packing for sleeves that do not require maintenance of fire rating shall be oakum, silicate foam, ceramic fibre or mineral fibre with approved sealant. Pack or foam to within 1" of both wall surfaces. Seal penetration packing with approved caulking and paintable water-proof mastic surface finish or silicone caulking.

4. All materials must be installed in accordance with manufacturers instructions; all gaps must be sealed. Finish caulk flush with wall or slab surface if piping runs exposed.

C. Other Water-proof Pipe Penetrations

1. Modular mechanical penetration seals shall be interlocking synthetic rubber links shaped to fill annular space continuously, with galvanized carbon steel bolts, nuts and pressure plates to expand rubber seal between pipe and sleeve. Sleeve seal shall be water-tight.

2. Prefabricated modular sleeves shall be Mason Industries (SWS) or approved equal stiffened galvanized steel sleeves with preformed closed-cell elastomeric seal (non-fire-rated) or preformed mineral fiber or silicone foam seal (fire-rated).

3. Provide water-proof 1" single ring set in silicone and bolted to floor or wall at chipped and drilled penetrations of existing slabs on grade and existing walls below grade.

5.6.7 EQUIPMENT INSULATION

A. General

1. Apply insulation after systems have been tested, proved tight and approved by Designer. Remove dirt, scale, oil, rust and foreign matter prior to installation of insulation.

2. No leaks in vapor barrier or voids in insulation will be accepted.

3. Insulation shall be Certain-Teed, Knauf, Manville or Owens Corning and shall be installed in strict accordance with manufacturer's recommendations.

4. Insulate the following equipment:

Hot water storage tanks

Heat exchangers

Expansion tanks

Air separators

Drain pans

Pumps

5. Insulation shall be 1" thick fibrous glass rigid block or semirigid board rated for temperature intended. Insulation shall be formed or fabricated to fit equipment. Ensure tight fit. Bevel edges and butt and stagger joints.

B. Secure with bands or wires at intervals recommended by manufacturer, no more than 12" centers. Provide corner angles.

C. Set cellular glass insulation and seal joints with bedding compound. Fill mineral fiber joints with insulating cement.

D. Apply two coats of adhesive with fibrous glass cloth embedded in first coat before application of second. Dry film thickness of finish shall be 1/8". Apply insulating cement over coated insulation; do not coat removable sections.

E. Equipment which needs servicing, such as pumps and plate heat exchangers shall be provided with removable insulation sections. Coordinate method of insulating plate heat exchanger with exchanger manufacturer.

5.6.8 MOTORS, STARTERS AND WIRING

A. Provide motors and controls for HVAC equipment, except units served by MCC provided under ELECTRICAL WORK. Provide control and other related wiring including interlocks. Power wiring (to panelboards, disconnect switches, starters and motors) will be provided under ELECTRICAL WORK. Starters that are not integral to equipment will be furnished, installed and wired under ELECTRICAL WORK.

B. Unless otherwise specified, motors shall be NEMA Design B, constant speed, self-ventilated squirrel cage induction. Motors shall have 1.15 service factor unless totally enclosed. Motors shall have Class B insulation.

1. Motors under 1/2 hp, shall be designed for 120 V, 60 Hz, single phase, unless otherwise specified.

2. Motors ½ hp and over shall be as required in schedules.

C. All motors shall be high or premium efficiency type. They shall conform to NEMA Standard MG-1-12.53a and shall have their efficiencies determined in accordance with IEEE Standard 112 Method B. The NEMA nominal efficiency shall be listed on the motor nameplate.

D. Starters furnished integral to equipment, and that require interlocks or remote control shall be magnetic with HAND-OFF-AUTOMATIC switch in cover. Provide magnetic starters as necessary, with auxiliary contacts, buttons and switches in required configurations. Refer to paragraph AUTOMATIC TEMPERATURE CONTROLS and to Control Drawings for interlock requirements.

1. Each 3-phase, 60 Hz motor shall be provided with magnetic starter with either ON-OFF push button or hand-off-automatic switch.

2. Other motors shall be provided with a manual starter with ON-OFF switch.

3. Control relay for each starter shall be for operation on 120 V, single phase, and transformer of sufficient capacity within starter case shall be furnished for this purpose.

4. Provide inverse time limit overload and under voltage protection in each leg and with pilot lights. Provide red and green On-Off pilot lights.

5. Provide nameplates with engraved white lettering to designate area and equipment served.

6. Starters for refrigeration machines shall be furnished by unit manufacturer.

7. Provide starters for two-speed motors with deceleration relay.

8. Furnish for all single speed motors, 25 hp and above, 95% power factor correction capacitors. Capacitors shall be in NEMA enclosure of the same rating as the motor's starter.

5.6.9 Vibration Isolation

A. Vibration Isolation Mount Types

1. General

Metal parts of vibration isolation units installed outdoors shall be cold-dip galvanized, cadmium plated, or neoprene coated after fabrication. Galvanizing shall meet ASTM B 117 and Federal Test Method No. 14.

Isolator types are scheduled to establish minimum standards. As an option, labor-saving accessories can be an integral part of isolators supplied to provide initial lift of equipment to operating heights, hold piping at fixed elevations during installation and initial system filling operations, and similar installation advantages. Accessories must not degrade vibration isolation system.

Static deflection of isolators shall be as indicated and as listed in Vibration Isolation Schedule. Static deflections indicated are minimum acceptable deflections for mounts under actual load. Isolators selected on basis of rated deflection are not acceptable.

2. Unit FSN (Floor Spring and Neoprene):

Spring isolators shall be free-standing and laterally stable without any housing. Spring diameter shall be not less than 0.8 of compressed height of spring at design load. Springs shall have a minimum additional travel to solid equal to 50 percent of actual deflection and a ratio of horizontal stiffness to vertical stiffness of approximately 1. Mounts shall have leveling bolts.

Set spring element in isolator in a neoprene cup with a steel washer to distribute load evenly over neoprene, or mount each isolator on a unit DNP isolator. If DNP isolator is used, provide a rectangular bearing plate of sufficient size to load pad uniformly in range of 40 to 50 psi. If spring isolator is supplied with a neoprene friction pad, use a stainless steel, aluminum, or galvanized steel plate between friction pad and DNP isolator. Permanently adhere DNP isolator, separator plate and friction pad to one another and to bottom of bearing plate.

If isolator is to be fastened to building structure and a unit DNP isolator is used under bearing plate, provide neoprene washers and grommets for each bolt hole in base plate. Size bolt holes to allow for grommets. Hold-down bolt assembly shall include washers to distribute load evenly to grommet. Bolts and washers shall be galvanized.

Unit FSN isolators shall be one (1) of the following products with appropriate neoprene pad, if required:

Type SW: A.B.

Type WSL: K.D.

Type SLF: M.I.

Series A: V.M.& C.

OST: V.E.C.

3. Unit FSNTL (Floor Spring and Neoprene Travel Limited):

Spring isolators shall be free-standing and laterally stable without any housing. Spring diameter shall be not less than 0.8 of compressed height of spring at design load. Spring shall have a minimum additional

travel to solid equal to 50 percent of actual deflection and ratio of horizontal stiffness to vertical stiffness approximately 1. Mounts shall have leveling bolts and vertical travel limit stops to control extension when weight is removed. Travel limit stops shall be capable of serving as blocking during erection of equipment. Maintain a minimum clearance of 1/4 inch around restraining bolts and between limit stops and spring to avoid interference with spring action.

Set spring element in isolator in a neoprene cup with a steel washer to distribute load evenly over neoprene, or mount each isolator on a unit DNP isolator. If DNP isolator is used, provide a rectangular bearing plate of sufficient size to load pad uniformly in range of 40 to 50 psi. If spring isolator is supplied with a neoprene friction pad, use a stainless steel, aluminum, or galvanized steel plate between friction pad and DNP isolator. Permanently adhere DNP isolator, separator plate, and friction pad to one another and to bottom of bearing plate.

If isolator is to be fastened to building structure and a unit DNP isolator is used under bearing plate, provide neoprene washers and grommets for each bolt hole in base plate. Size bolt holes to allow for grommets. Hold-down bolt assembly shall include washers to distribute load evenly to grommet. Bolts and washers shall be galvanized.

Unit FSNTL isolators shall be one (1) of the following products, with appropriate neoprene pad, if required:

Type SW (with limit stops): A.B.

Type WSCL: K.D.

Type SLR: M.I.

Series AWR: V.M.& C.

kW: V.E.C.

[Provide the corresponding isolators with seismic restraints to meet the seismic design requirements identified in Section 13080.]

4. Unit FN (Floor Neoprene):

Neoprene isolators shall be neoprene-in-shear type with steel reinforced top and base. Cover metal surfaces with neoprene. Top and bottom surfaces shall be ribbed. Provide bolt holes in the base, and top shall have a threaded fastener.

Mounts shall include leveling bolts that may be rigidly connected to equipment.

Unit FN isolators shall be one (1) of the following products:

Type RV: A.B.

Type F: K.D.

Type ND: M.I.

Series RD: V.M.& C.

T44: V.E.C.

5. Unit NP (Neoprene Pad):

Neoprene pad isolators shall be one (1) layer of 1/4 inch to 5/16 inch thick ribbed or waffled 40 to 60 durometer neoprene. Load pads within manufacturer's written recommended range. Provide a top bearing plate where necessary to uniformly distribute load and deflection.

Unit NP isolators shall be one (1) of the following products:

Type NR: A.B.

Type Korpad: K.D.

Type W: M.I.

Series Shear Flex: V.M.& C.

100N: V.E.C.

6. Unit DNP (Double Neoprene Pad):

Neoprene pad isolators shall be two (2) layers of 1/4 inch to 5/16 inch thick ribbed or waffled 40 to 50 durometer neoprene, separated by a stainless steel or aluminum plate. Permanently adhere these layers together. Load pads within manufacturer's written recommended range. Provide a top bearing plate where necessary to uniformly distribute load and deflection.

Unit DNP isolators shall be formed from one (1) of the following products:

Type NR: A.B.

Type Korpad: K.D.

Type WSW: M.I.

Series Shear Flex: V.M.& C.

200N: V.E.C.

7. Unit HS (Hanger Spring):

Vibration isolation hangers shall consist of free-standing laterally stable steel spring set into a neoprene cup, contained within a steel housing. Neoprene cup shall have a grommet (or other element) to prevent hanger rod from contacting hanger housing. Provide a steel washer in neoprene cup to evenly distribute load onto neoprene. Spring diameter and hanger housing lower hole sizes shall be large enough to permit hanger rod to swing through a 30 degree arc before contacting housing. Spring elements shall have a minimum additional travel to solid equal to 50 percent of actual deflection.

Unit HS isolators shall be one (1) of the following products:

Type BSS-A: A.B.

Type VSP-30: K.D.

Type 30: M.I.

Type SH: V.M.& C.

SNC: V.E.C.

[Provide corresponding isolators with seismic restraints to meet seismic design requirements identified in Section 13080.]

8. Unit HSN (Hanger Spring and Neoprene or Glass Fiber):

Vibration isolation hangers shall consist of a free-standing, laterally stable steel spring and a neoprene or a glass fiber element in series, contained within a steel housing. Provide a neoprene neck bushing (or other element) where hanger rod passes through hanger housing to prevent rod from contacting hanger housing. Spring diameters and hanger housing lower hole sizes shall be large enough to permit hanger

rod to swing through a 30 degree arc before contacting housing. Spring elements shall have a minimum additional travel to solid equal to 50 percent of actual deflection. Neoprene element shall have a 0.3 inch minimum static deflection.

Unit HSN isolators shall be one (1) of the following products:

Type PBSRA: A.B.

Type VSX-30: K.D.

Type 30N: M.I.

Type RSH or RFH: V.M.& C.

SNRC: V.E.C.

[Provide corresponding isolators with seismic restraints to meet seismic design requirements identified in Section 13080.]

9. Unit HN (Hanger Neoprene or Glass Fiber):

Vibration isolation hangers shall consist of a neoprene-in-shear or glass fiber element contained in a steel housing. Provide a neoprene neck bushing (or other element) where hanger rod passes through hanger housing to prevent rod from contacting hanger housing. Diameter of hole in housing shall permit hanger rod to swing through a 30 degree arc before contacting hanger housing.

Unit HN isolators shall be one (1) of the following products:

Type BRD-A: A.B.

Type H: K.D.

Type HD: M.I.

Type RHD or RFD: V.M.& C.

3C: V.E.C.

10. Unit PCF (Precompressed Glass Fiber) Vibration and Noise Isolation Pads:

Precompressed glass fiber pads shall be molded inorganic fiberglass individually coated and sealed with a moisture-impervious elastomeric membrane. Severely overload fiberglass during manufacture.

Pad dimensions, thickness and spacing shall be manufacturer's standard for static deflection as indicated in Vibration Isolation Schedule.

Unit PCF isolators shall be Type KIP: K.N.C.

B. Equipment Bases

1. Unit BSR (Base - Steel Rail):

Steel rail bases shall consist of structural steel sections sized to provide a rigid beam which will not twist, deform, or deflect in any manner which will negatively affect operation of supported equipment or vibration isolation mounts. Rail bases shall include side-mounting brackets for attachment of vibration isolators.

Unit BSR bases will be supplied by isolator manufacturer and shall be one (1) of the following products:

Type C or CIS: A.B.

Type Steel Base Rail: K.D.

Type R or ICS: M.I.

Type WFR or AR: V.M.& C.

C Rail or OST Rail: V.E.C.

2. Unit BSF (Base - Steel Frame):

Steel base frames shall be structural steel sections sized, spaced, and connected to form a rigid base which will not twist, rack, deform, or deflect in any manner which will negatively affect operation of supported equipment or vibration isolation mounts. Size frames to support equipment and motors plus any associated pipe elbow supports, duct elbow supports, electrical control elements, or other components closely related and requiring resilient support in order to prevent vibration transfer to building structure. Depth of steel frame bases shall be at least 1/10 longest dimension of base, with a minimum depth of 4 inches but not more than 12 inches. Include side-mounting brackets for attachment to vibration isolators.

Unit BSF bases shall be supplied by isolator manufacturer and shall be one (1) of the following products:

Type SW-1: A.B.

Type Steel Base: K.D.

Type WFSL: M.I.

Series WFB: V.M.& C.

C Base or OST Base: V.E.C.

3. Unit BIB (Base - Inertia Base):

Concrete inertia bases shall be stone-aggregate concrete, 150 pounds per cubic foot, and appropriate steel reinforcing cast between perimeter structural steel channels. Inertia bases shall be a rigid base which will not twist, rack, deform, deflect, or crack in any manner which would negatively affect operation of supported equipment or vibration isolation mounts. Size to support equipment and motors plus any associated pipe elbow supports, duct elbow supports, electrical control elements, or other components closely related and requiring resilient support in order to prevent vibration transfer to building structure. Thickness shall be at least 1/12 longest dimension of inertia base with a minimum thickness of 6 inches but not more than 12 inches. Include side-mounting brackets for attachment to vibration isolators.

Steel frame and reinforcement shall be supplied by vibration isolator manufacturer. Concrete: Division 3.

Frame and reinforcement for Unit BIB bases shall be one (1) of the following products:

Type Custom: A.B.

Type RCPF: K.D.

Type KSL: M.I.

Series WPF: V.M.& C.

SN-OST: V.E.C.

4. Unit BC (Base - Curb):

Curb type isolation bases shall be prefabricated assemblies consisting of an extruded aluminum frame and steel spring isolation system that fits over roof curb and under isolated equipment. Aluminum frame support equipment load without detrimental twist or deflection. Select and position spring isolators along curb to achieve scheduled minimum static deflection. Static deflection shall be constant around entire periphery of base. Springs shall be free standing, laterally stable, with a diameter of not less than 0.8 times compressed height, and shall have additional travel to solid that is at least 50 percent of actual deflection. Provide resilient neoprene snubbers at corners of base to limit lateral movement of equipment under wind load to 1/4 inch.

Make isolation curb base weathertight by sealing around periphery with closed-cell neoprene or flexible vinyl. This shall not inhibit vibration isolation of spring elements. Use a closed-cell sponge gasket or field caulking between equipment unit and isolation curb base and between isolation curb and roof curb to form a weathertight seal.

Unit BC vibration isolation curb bases shall be supplied by isolator manufacturer and shall be one (1) of the following products:

Type CMAB: M.I.

Series ATR: V.M.& C.

Type AR: V.E.C.

C. Resilient Penetration Sleeve/Seals

1. Resilient penetration sleeve/seals shall be a pipe or sheet metal section that is 1 inch larger in each dimension than penetrating element and is used to provide a sleeve through construction penetrated. Sleeve shall extend 1 inch beyond penetrated construction on each side. Pack annular space between sleeve and penetrating element tightly with material as specified in Section 15091 to within 1/4 inch of ends of sleeve. Fill remaining 1/4 inch space on each side with acoustical sealant to form an airtight seal. Penetrating element shall be able to pass through sleeve without contacting sleeve.

D. Resilient Lateral Guides

1. Resilient lateral guides shall be a standard product of vibration isolation mounting manufacturer, incorporating neoprene isolation elements which are specifically designed for providing resilient lateral bracing of vertically-rising pipes.

2. Resilient lateral guides shall be one (1) of the following products:

Type Custom: A.B.

Type Custom: K.D.

Type ADA: M.I.

Type MDPA: V.M.& C.

VERG: V.E.C.

E. Flexible Duct Connections

1. Flexible duct connections shall be as specified in Section 15860.

F. Flexible Pipe Connections

1. Fabricate of multiple plys of nylon cord, fabric, and neoprene, vulcanized so as to become inseparable and homogeneous. Form straight connections in a double sphere shape. Elbow connections shall have a single sphere shape at the curve of the unit. Flexible connections shall be able to accept compressive, elongative, transverse, and angular movements.

2. Select and specially fit, as required, to suit system temperature, pressure, and fluid type. Do not use rods or cables to control extension of connector.

3. Connectors for pipe sizes 2 inches and smaller shall have threaded female union couplings on each end. Fit larger sizes with metallic flange couplings.

4. Flexible pipe connections shall be one (1) of the following products:

   Type MFTNC, MFTFU or MFNEC: M.I.

   Twin Sphere or E1 Sphere: Metraflex.

   OR

5. Fl Fabricate of stainless steel (T321) corrugated inner tubing with outer shield of stainless steel wire braid. Flexible connections shall be able to accept compressive, elongative, transverse, and angular movements.

6. Select and specially fit, as required, to suit system temperature, pressure, and fluid type. Do not use rods or cables to control extension of connector.

7. Connectors for pipe sizes 2 inches and smaller shall have threaded female union couplings on each end. Fit larger sizes with steel flanges rated at 150 pounds.

8. Flexible pipe connections shall be one (1) of the following products:

   Type BSSRF: M.I.

   Type SL: Metraflex.

G. Restraints

1. Unit TR (Thrust Restraints):

   Thrust restraints shall consist of a spring element in series with a neoprene pad, with same deflection as specified for isolators supporting equipment. Spring element shall be contained within a steel frame and preset at factory for thrust and be field-adjustable to allow for a maximum of 1/4 inch movement during starting or stopping of equipment.

   Furnish with rods and angle brackets for attachment to equipment.

   Unit TR restraints shall be one (1) of the following products:

   Type WB: M.I.

   Type HR: V.E.C.

2. Unit SN (Snubbers Neoprene):

   Custom fabricate using Unit FN isolators mounted to steel angle brackets. Steel angle shall be sufficiently rigid and mounting sufficiently secure to resist lateral movement of equipment during on-off cycles.

   Unit SN snubbers shall Type Z-1011: M.I.

3. Grommets

   Grommets shall either be custom made by combining a neoprene washer and sleeve, or shall be one (1) of products listed below. Neoprene durometer shall be between 30 and 50. Use grommets at vibration

isolators to prevent bolts from directly contacting base plate. Tighten bolts only to slightly compress neoprene washer.

Grommets shall be one (1) of the following products:

Series W by Barry Controls (Brighton, MA).

H. Acoustical Sealants

1. Acoustical sealants shall be non-hardening type and shall be one (1) of the following products:

Acoustical Sealant: D.A.P.

Type BR-96: Pecora.

Acoustical Sealant: Tremco.
Acoustical Sealant: U.S. Gypsum.

5.6.10 Testing and Balancing

A. The testing, adjusting, and balancing agency shall be certified by Associated Air Balance Council (AABC) or by National Environmental Balancing Bureau (NEBB) in those testing and balancing disciplines required for this project, and having at least one Professional Engineer registered in the State of Massachusetts, certified by AABC or NEBB as a Test and Balance Engineer.

B. Fully test HVAC work in presence of Owner's facilities personnel and Owner. Comply with requirements of local building Inspectors. In installations where the supply air is being provided by the Owner's system, provide measurement of air flow and verify that Owner assigned CFM is being provided.

C. Engage an independent, certified air balancing contractor.

1. Perform the air balancing, including testing and adjustment of each diffuser and register. Submit complete balancing report for approval.
2. Report test results in format acceptable to Owner and certify that tests have been made and is approved by local authorities. All air quantities shall be balanced to within +/-10% of design values.
3. Correct all deficiencies resulting from testing and balancing at no additional cost to Owner.

5.6.11 Thermal Insulation for Ductwork:

1. Supply and return air ductwork shall be insulated on outside with 1-1/2 inch thick fiberglass insulation with vapor barriers. First 15'- 0" of supply and return air ductwork shall be lined with 1"thick acoustical lining. Increase duct size 1" all around where lined.
2. Insulation shall be adhered to duct. Adhesive shall be applied in 6 inch wide strips 12 inches on center. Butt all edges of all insulation and seal all joints of vapor seal insulation with tape of same material as vapor seal applied with adhesive specified to provide a continuous vapor seal. On the bottom of ducts 24 inches and wider, stick clips shall be installed 10 to 14 inches on centers. Seal all holes for stick clips with tape and adhesive as specified to provide a continuous vapor seal.

5.6.12 BUILDING ENERGY DASHBOARD SPECIFICATION

A. OVERVIEW

1. Manufacturers

a. Basis of Design
   i. The basis of design for the building dashboard solution is Lucid's Building Dashboard product.

2. Building Dashboard

a. Overview
   i. Vendor shall provide a single, comprehensive solution that can connect to disparate building systems and summarize resource consumption and production data plus other relevant information for the following audiences: non-technical building occupants and visitors, building staff, facility managers and executives/stakeholders.

b. PC-optimized and kiosk-optimized dashboards
   i. Solution must include both a web-based dashboard optimized for display on an interactive touchscreen kiosk in the building lobby/entranceway, and another web-based dashboard optimized for a personal computer.

c. SaaS
   i. Solution must be a Software as a Service (SaaS) option, not requiring software installation with on-site servers. The SaaS structure should enable configuration, maintenance and upgrades to occur over the internet.

3. Definitions

a. *Client*
   i. The end user organization or agent of the end user organization that will implement Building Dashboard.

b. *Dashboard users*
   i. Non-technical individuals that are the primary audience for the building dashboard unless otherwise noted. Dashboard users could include, for example, individuals that are working in, living in, studying in, visiting, or otherwise affiliated with a building included on an organization's Building Dashboard.

c. *Kiosk-optimized dashboard*
   i. The web-based version of the dashboard whose look and feel is optimized for display on an interactive touchscreen kiosk in a building lobby/entranceway or other public area and optimally displayed on a screen that supports a 1360x768 resolution.

d. *PC-optimized dashboard*
   i. The web-based version of the dashboard whose look and feel is optimized for use by individuals accessing the dashboard via a personal computer.

A. DASHBOARD BACK END

1. Data Collection, Processing, Storage, and Access

a. Support for multiple resources
   i. Solution must be able to accommodate monitoring and display for consumption and/or production rates of multiple resources, including but not limited to: electricity consumption, natural gas consumption, water consumption, gray water consumption, steam consumption, heating hot water consumption, cooling/chilled water consumption, photovoltaic production, solar thermal production, geothermal heat production, rainwater consumption, wind turbine production

b. Real-time data collection from building automation systems

i. Solution must be able to integrate with and collect data from building automation systems (aka BAS, EMS, BMS, DDC, EMCS) using open and standard building automation protocols such as BACnet, Modbus and Lon.

c. Resource modules
   i. Values must be available through the EMS as a totalized or accumulated value. System values include:
      1) Electricity in kWh
      2) Gas in scf
      3) Heating/Cooling in BTUs
      4) Water in gallons
      5) Gas Fired Domestic Hot Water System in BTUs

d. Real-time data collection from metering equipment
   i. Solution must be able to integrate with utility meters and sub meters that measure utilities such as electricity, water, chilled water, steam, etc. Solution must support output readings from Pulse and Modbus capable meters.

e. Manual data entry
   i. Solution must be able to support data entry for utilities that are not automatically monitored.
   ii. Manual data entry of utility bills must be possible to allow for utilities that are not digitally metered to be easily integrated into the proposed system and managed by the client.

f. Data storage
   i. All resource consumption and production data collected by the system must be hosted remotely by the vendor

g. Submetering capabilities
   i. Solution must be able to monitor both whole-building consumption and production, as well as submetered consumption (e.g. energy consumption by end-use, consumption by floor, consumption by building wing)

h. Application Programming Interface (API)
   i. Solution must provide API for reading and writing data from/to the system for integration with third party systems.
   ii. API must be documented and accessible over HTTPS.

i. Energy Star Portfolio Manager
   i. Solution must be able to integrate with Energy Star Portfolio Manager and allow reading of data that is already available in the client's Portfolio Manager account.

j. Data quality analysis & filtering
   i. Solution must provide capability to detect and filter faulty and incorrect meter reads (such as spikes). Feature must be automated and not require client to review data.

k. Fault detection
   i. Solution must be able to detect and alert the Client's system operator of conditions such as network/connectivity problems with data collection devices, and flat-lined, malfunctioning or disconnected meters, etc.

l. Weather data
   i. Solution must be able to collect and provide access to detailed weather data with zip code level precision, provided by a reliable and trusted third party and not rely on weather sensors on site.
   ii. A five-year historical record must be available at all times for weather normalization purposes.

m. Data access
   i. All raw data collected must be accessible via an API and/or CSV format for download and analysis in third party applications such as Microsoft Excel.
   ii. Data should be in a format conducive to benchmarking, carbon accounting, and student, faculty or staff research.

2. Security

a. Upload authentication
   i. Uploads of client data must be authenticated and access-controlled to restrict access to user data

b. SSL encryption

i. Solution must offer SSL for secure transmission of client data

c. Hosted product
   i. Solution must be a hosted SaaS offering so that security is the vendor's concern, not the client's

d. Physical security
   i. Equipment hosting client data must be located in a secure facility with two-factor authentication for physical access

e. Firewall
   i. Equipment hosting client data must be secured by firewall.

f. Intrusion detection
   i. Equipment hosting client data must be protected by an Intrusion Detection System (IDS)

g. Access control
   i. Dashboards must have the option of being password protected to prevent access by unauthorized parties

h. Secure by design
   i. Solution must be engineered with security in mind, and mitigate against common SaaS security problems, such as cross-site scripting attacks

i. Security monitoring
   i. Equipment hosting client data must be monitored for security vulnerabilities and patched expeditiously.

j. Secure, off-site backup
   i. Client data must be backed up securely and periodically to off-site location(s) in case of natural disaster or unavoidable emergency.

3. Hardware Components

a. Kiosk touchscreen
   i. Vendor must provide a fully supported kiosk hardware solution as an option. This must include:
      1) Choice of 32”, 42" or 46" Touchscreen (UL approved, powered by 110 Volt wall plug) with native resolution of 1360 x 768 60 HZ (minimum) and all necessary cables
      2) Touchscreen wall mount
      3) Integrated, custom-configured Dashboard PC computer

b. Meters
   i. Vendor to provide Modbus RTU electricty meters as an option for buildings that do not currently have adequate digital electricity meters

c. Data collection and transmission hardware
   i. Vendor must be able to provide all hardware components needed to collect data and transmit it to Lucid's servers.
   ii. Specifically, the vendor must provide a Java Application Control Engine (JACE) or Data Logger to serve as a bridge between the EMS system and Lucid’s offsite server.
   iii. The client will be responsible for installing the JACE or Data Logger on the local network that accesses the meters/controllers.
   iv. The vendor must configure the JACE or Data Logger to communicate over the network using the BACnet/IP protocol to gather output from points on the EMS.
   v. The JACE or Data Logger will push the values of the EMS points to the Lucid servers via .CSV file, once every 60 seconds.

B. DASHBOARD DESIGN & FUNCTIONALITY

1. Software Architecture

a. Scalability and maintainability
   i. Solution must be able to easily scale from one to hundreds of buildings.
   ii. Adding buildings and metering points in the future must be straightforward and cost effective.
   iii. Client must be able to add additional monitoring functions using software upgrades without requiring system redesign or display upgrades.

b. Automatic upgrades

i. Solution must include automatic upgrades at no additional cost to the client in accordance with the service agreement that is established when the system is turned over to the client.

2. Dashboard Branding & Layout

a. Custom logos and colors
   i. PC- and kiosk-optimized dashboards must be customizable with client's logo and colors
b. Custom photos and copy
   i. PC- and kiosk-optimized dashboards must allow client to use custom photos and copy throughout
c. Custom page layouts
   i. PC- and kiosk-optimized dashboards must allow client to choose a custom layout and group of features for each monitored building.

3. Dashboard Navigation

a. Building profiles
   i. For multi-building deployments, PC-optimized dashboard must include a profile for each building that includes a photograph (or rendering) of the building plus a description.
b. Spatial building directory
   i. PC-optimized dashboard must be able to display monitored buildings on a map (such as a Google Map)
c. Building search
   i. PC-optimized dashboard must allow users to search for specific buildings.

4. Dashboard Default Slideshow Mode

a. Slideshow mode
   i. Client must have the choice of programming the Kiosk-optimized dashboard to default to a slideshow mode, in which the screen cycles through the dashboard's screens. When a user begins interacting with the dashboard, the dashboard must automatically exit slideshow mode.

5. Dashboard Data Display, Exploration, Comprehension & Comparison

a. Real time resource consumption
   i. PC- and kiosk-optimized dashboards must allow user to explore consumption of diverse resources (electricity, natural gas, water, hot water for heating, cold water for cooling, gray water) using a graphical display of resource usage over multiple time scales (today, yesterday, this week, last week, this month, this year etc.) as selected by the user
b. Historical comparison
   i. PC- and kiosk-optimized dashboards must allow users to overlay historical data points over the real-time data points for various time periods (today vs yesterday, this week vs last week, this year vs last year etc.)
   ii. The dashboard should display a percent reduction/increase value for each unit of time (hour, day, month etc.) as the cursor scrolls over the historical data point.
c. Unit equivalents
   i. PC- and kiosk-optimized dashboards must allow users to view measured resources in various unit equivalents, including but not limited to kilowatt-hours (for electricity), kilo-BTUs (for non-electric energy resources), pounds of CO_2 (for all carbon-producing resources), and dollars (for all resources).
   ii. Kiosk-optimized dashboard must additionally allow users to view measured energy resources in gallons of gasoline, appliance usage-hours, miles driven in a car and hamburgers. These unit equivalents should be designed and specified with the objective of assisting an audience of non-technical users in understanding and interpreting resource consumption levels.

d. Normalization
   i. PC- and kiosk-optimized dashboards must support normalized comparisons based on building occupancy and square footage.
e. End use breakdowns
   i. PC- and kiosk-optimized dashboards must allow users to view and compare resource consumption across all sub-metered end uses.
f. Renewables
   i. PC- and kiosk-optimized dashboards must display performance data for photovoltatic, solar thermal, and geothermal systems. They must also show real-time and historical production, savings and payback trajectory, and other monitored variables. Building Dashboard should do so in the context of data-enabled illustrations.
g. Energy orb
   i. Kiosk-optimized dashboard must include an energy orb for each building to serve as a quick color indicator of the building's current energy performance in comparison to previous performance during the same time of day and day of the week.
h. Interpretive gauges
   i. PC-optimized dashboard must include interpretive gauges that use dynamic, animated landscapes to visualize resource consumption and production in an engaging and informative way.
i. Peer comparison
   i. PC- and kiosk-optimized dashboards must give users the ability to compare consumption of buildings based on building type and resource type. If sub-metering exists, solution must also allow comparisons within a building (between floors or wings). Users must be able to conduct comparisons using normalized (per occupant or per square foot) data.

6. Dashboard Engagement & Communication Tools

a. Energy reduction competitions
   i. Solution must allow client to host resource reduction competitions between buildings, building wings, individual floors, or other organizations or groups of organizations in the same or different geographic locations. Solution must be able to calculate at least hourly rankings, and both PC- and kiosk-optimized dashboards must be able to display at least hourly ranking updates and communicate savings in terms of units of kWh, pounds of CO2 and dollars.
b. Green features
   i. PC- and kiosk-optimized dashboards must allow users to view up to 30 of the building's or group of buildings' green features. The green features tool must use custom imagery and text.
c. LEED credit checklist
   i. PC- and kiosk-optimized dashboards must allow users to view the list of LEED prerequisites and credits achieved by the building
d. Sustainability initiatives
   i. PC- and kiosk-optimized dashboards must allow users to view up to 30 of the building's or group of buildings' sustainability initiatives. The sustainability initiatives tool must use custom imagery and text.
e. Budgets
   i. PC-optimized dashboard must be able to display actual performance vs monthly budgets. Budget function must visualize progress in terms of kilowatt-hours, dollars and carbon dioxide emissions.
f. Discussions with Facebook
   i. PC-optimized dashboard must allow users to make discussion posts and should display these posts as a feed.
   ii. The discussions function must be connected to Facebook such that users can elect to have their discussion posts displayed on their personal Facebook profile.
g. Conservation Commitments with Facebook
   i. PC-optimized dashboard must allow users to commit to specific conservation behavior action items, which must be fully customizable.
   ii. The commitments function must be connected to Facebook such that users can elect to have their commitments displayed on their personal Facebook profile.
h. Green tips

i. PC- and kiosk-optimized dashboards must be able to display rotating, randomly generated tips on energy and water conservation how-to.

i. Event tagging

i. PC-optimized dashboard must allow managers to record and display building operations and maintenance activities, events and other relevant information in a continuous and easily accessible log viewable both by the manager and end users.

j. Twitter feed

i. PC-optimized dashboard must be able to display a specified number of tweets by one or more specified Twitter users, thus allowing the organization's sustainability team to easily post messages to the Dashboard.

k. Embedded video

i. PC- and kiosk-optimized dashboards must be able to display embedded YouTube videos. PC-optimized dashboard should allow client to display multi-video stream.

l. Current and forecast weather

i. PC- and kiosk-optimized dashboards must be able to display zipcode-specific current and forecasted weather without the need for an on-site weather station

m. Events calendar

i. Kiosk-optimized Dashboard must be able to display events managed in Google Calendar.

C. DASHBOARD MANAGEMENT & REPORTING

1. Dashboard Management

a. Dashboard management

i. Solution must include a password-protected web-based support interface that allows authorized users to manage dashboard content directly, and not require changes to have to happen through support requests.

b. Dashboard access traffic monitoring and analysis

i. Vendor must provide an interface for tracking and reporting visitor activity on the PC-optimized version of the dashboard. Metrics such as unique visitors and total visitors must be available for each dashboard, and should be trackable over time.

c. Green Features content management

i. Solution must include a web-based interface for managing the Green Features and Sustainability initiatives content (images and text) rendered on the dashboard

d. Budget management

i. Solution must include a web-based interface that allows authorized users to set and modify energy and water use budgets/goals.

e. Commitments management and metrics

i. Solution must include an interface for managing Conservation Commitments. Interface must allow manager to define commitment sets that target specific audiences and span different time periods and view which users have committed to which conservation actions.

f. Energy competition management

i. Solution must include an interface for managing competitions between buildings or individual floors and custom groups. The interface must also include a record of previous competitions.

g. Building profile management

i. Solution must include an interface for managing building meta-data, including but not limited to occupancy, square footage, map coordinates, building type, and building profile picture (avatar).

h. Manual data entry

i. Solution must allow authorized users to submit manual meter reads or billing data, in order to enable non-realtime buildings to be incorporated into the dashboard.

2. Executive PDF Reports

a. Overview

i. Solution must be able to provide print-ready PDF reports of high-level metrics for presentation to executives and stakeholders.

b. Load profile analysis
   i. PDF reports must be able to illustrate the typical load profile of a building/meter for any day of the week
c. Building performance analysis
   i. PDF reports must be able to include metrics on building performance over user-specified month or year. Users must be able to normalize these metrics on a per square foot and per person basis.
d. Peak load versus base load analysis
   i. PDF reports must provide analysis of consumption peaks vs building base load over different timescales.
e. Biggest consumers increasing/decreasing usage analysis
   i. PDF reports must be able to display largest percent change across building portfolio; i.e. buildings posting highest reductions or increases in consumption versus a reference period.

D. DASHBOARD IMPLEMENTATION, SERVICE & SUPPORT

3. Implementation

a. Hardware installation
   i. The client must be responsible for the installation of all hardware, including but not limited to hardware purchased from the Vendor.
b. Integration specialist
   i. Vendor must provide integration expertise to ensure successful integration with BMS and/or meters.
c. Dashboard set-up
   i. Once a contract has been signed, the Vendor shall provide a Customer Requirements Checklist that the client will complete to allow the Vendor to set up the dashboard according to the client's specifications.
   ii. Completing the Checklist entails providing the Vendor with images and text, answering a few questions about the client's buildings, and selecting other options, such as unit equivalents, that are the best fit for the client.
d. Training
   i. The Vendor must provide training to the client's project team, including a kick-off meeting to discuss best practices for program opportunities such as competitions.

4. Service

a. Service format
   i. Solution must provide service on a license/subscription basis. Clients have the opportunity to renew service at the end of each purchased service period.
b. Five years of service
   i. Purchase of the dashboard must include five years of service.
c. Hosted data Service must include secure, cloud hosting of all collected consumption data.
d. Software updates
   i. Service must include upgrades to the dashboard software upon new releases of purchased features and functionality.
e. Support provided
   i. Service must include the support activities listed in the Support section below.
f. Service start date
   i. Service must begin on the contract Effective Date.

5. Technical Support

a. Uptime monitoring and alerts
   i. Vendor must provide and maintain a network operations center (NOC) for uptime monitoring of all data acquisition devices and meters.

ii. Solution must be able to alert responsible parties by email and/or SMS of component failure.

b. Issue tracking system
   i. Vendor must provide access to a web-based issue/ticket tracking system and maintain record of all incidents during the life of the system.

c. Documentation and FAQs
   i. Vendor must provide reference documentation and/or in-line dashboard configuration help to client.

d. Telephone support with no automated menus
   i. Vendor must provide telephone support from a dedicated support agent.

e. Email support
   i. Vendor must provide easy access to support from a dedicated support agent via email.

f. Clearly defined support hours
   i. Vendor must document hours of support availability and expected turnaround time for support requests

g. Professional escalation
   i. Vendor must make engineering professionals available via established escalation protocols.

6. Dashboard Utilization Support

a. Dashboard utilization and program implementation consulting
   i. Vendor must provide expertise via a designated vendor Client Consultant to assist client in integrating the dashboard into new and existing sustainability and occupant engagement and behavior change initiatives.

b. Competition resource kit
   i. Vendor must provide client with a competition resource kit that includes outreach and organizing tips, sample marketing collateral, research papers, and other resources.

c. Dashboard launch kit
   i. Vendor must provide client with a dashboard launch kit that includes sample press releases, dashboard badges that can be placed on the client's webpage, and social networking outreach tips.

5.6.13 CUSTOM AIR HANDLING UNITS

PART 1: GENERAL

1.01 WORK INCLUDED

A. York Custom Air Handling Units and components as shown, scheduled, and indicated on the Drawings.

1.02 QUALITY ASSURANCE

A. Manufacturer shall have a minimum of 25 years of experience in designing, manufacturing, and servicing air-handling units.

B. The design shown on the drawing is based upon products of the manufacturer scheduled. Alternate equipment manufacturers shall be acceptable if equipment meets the scheduled performance and dimensional requirements, and

complies with these specifications. The intent of this specification requirement is to assure that the products are manufactured through a quality system and framework that will assure consistent quality in products delivered.

C. If equipment is supplied by a manufacturer other than the one named, then the Mechanical Contractor shall be responsible for coordinating with the General Contractor and all affected Subcontractors to ensure the specified performance is met and proper provisions are made for installation of the furnished unit. This coordination shall include, but not be limited to, the following:
   1. Structural supports for units
   2. Size and location of concrete bases/housekeeping pads
   3. Location of roof curb, unit supports and roof penetrations
   4. Ductwork sizes and connection locations
   5. Piping size and connection/header locations
   6. Interference with existing or planned ductwork, piping, and wiring
   7. Electrical power requirements and wire/conduit and overcurrent protection sizes.
   8. Trap height requirements

D. The Mechanical Contractor shall be responsible for all costs incurred by the General Contractor, Subcontractors, and Consultants to modify the building provisions to accommodate units furnished by a manufacturer other than the manufacturer named as basis of design.

1.03 RATINGS AND CERTIFICATIONS

A. Fans: Conform to AMCA 210 for performance ratings.

B. Air Handling Unit safety: Conform to E.T.L. or U.L. standards (if no carbon filters).

C. Air Coils: Conform to ARI 410 for capacities, pressure drops, and selection procedures.

D. Filter Media: ANSI/UL 900 listed Class I or Class II filter media.

E. Air Handling Unit manufacturing: Utilize only ISO9001, 9000, or 9002 certified facilities in the manufacturing of the air handling unit.

F. Electric control wiring: Provide in accordance with NEC codes & ETL requirements.

G. Motors: Satisfy the Federally-mandated Energy Policy Act (EPACT).

H. Welding or brazing: Perform using Welding or brazing procedure specifications. Welders, brazers and welding operators qualified in accordance with the current editions of AWS D1.1, D9.1, D1.2 or ASME Code Section IX and the Code of Fabrication as applicable.

1.04 WARRANTY

A. The manufacturer's standard parts and labor warranty shall be for a period of eighteen months from the date of shipment.

B. Warranty is limited to manufacturer defect only.

C. Warranty shall include labor.

D. The warranty shall include parts during this period.

E. The warranty shall not include parts associated with routine maintenance, such as belts, air filters, etc.

F. Warranty is not extended to any alteration, modification or external component attached to "original" equipment "as-built" and shipped from manufacturing facilities.

G. Exclusions: This warranty does not include the following costs and expenses:
   1. Shipping, handling or transportation charges.
   2. Freight for in-warranty parts is only covered FOB Continental USA. Any local customs, VAT or other duties are not included.

1.05 OPERATION AND MAINTENANCE DATA

A. Include instructions for lubrication, filter replacement, motor and drive replacement, spare parts lists, and wiring diagrams.

PART 2: PRODUCTS

2.01 ACCEPTABLE MANUFACTURER

A. York Custom (Basis of design)

B. Trane Custom

C. Buffalo

2.02 GENERAL DESCRIPTION

A. Air Handling Unit (AHU) shall consist of a structural base, insulated casing, access doors, fans, motors, motor controls, coils, filters, dampers, controls, components, and accessories; as shown on drawings, schedules, and specifications.

B. Provide AHU to meet the specified levels of performance for scheduled items including airflow, static pressure, cooling capacity, heating capacity, electrical characteristics, sound, casing leakage, panel deflection and casing thermal performance.

C. Provide internal components and accessories as specified and scheduled. Components and accessories shall be installed by the AHU manufacturer in an ISO-900X certified facility.

D. Factory test and balance fan design and drives to limit vibration (displacement in mils) at operating speeds.

E. Unit shall ship broken down on pallets that will fit in building elevator. Unit shall be re-assembled in the space by factory authorized technicians.

F. Units to be Field Tested. Test 3 units (to be selected by owner) with the following tests:
   1. 1% Leakage
   2. L/240 Deflection

   If the units fail the field test, test all 15 air handling units to the above conditions. Customer and manufacturer representative to be present for field testing.

2.03 UNIT PERFORMANCE

A. Unit is comprised of casing, base, access panels and access doors.

B. The construction of the air handling equipment shall provide a maximum deflection no greater than L/240 when subjected to 125% of the designed system static pressure, not to exceed +/- 10”w.g. Deflection shall be measured at the midpoint of the cabinet height and midpoint of the width in the largest unsupported casing section.

C. The air-handling unit leakage shall not exceed 0.5% of rated CFM at 125% of the designed system static pressure, maximum +/-10”w.g.

D. Base frame members (perimeter and internal supports) shall be permanently bonded, providing a Uni-Body Base to assure unit integrity. Mechanically fastened base frame members are unacceptable.

E. Casing shall include removable panels in each section for servicing of equipment without compromising the equipment integrity.

F. Air handling equipment casing shall be galvanized and shall have encapsulated insulation to assure that the quality of the conditioned air is not compromised. Voids in equipment casing and insulation not meeting the stated thermal conductivity R of 12 hr-ft2-°F/BTU are unacceptable. Any portion of the unit casing that is not insulated or which has a thermal conductivity less than 12 hr-ft2-°F/, requires modification by the contractor to meet the thermal conductivity value previously stated.
   1. Insulation application shall comply with the requirements of NFPA 90A.
   2. Equipment to be labeled in accordance with UL 1995, Standard for Safety Heating and Cooling Equipment.
   3. Entire cabinet (walls, roof, base, corners, doors, etc.) shall have a minimum thermal conductivity R of 12 hr-ft2-°F/BTU
   4. Floor shall have insulation designed to provide at most L/240 deflection based on 300 lb. concentrated load at mid-span.

G. Provide IAQ drain pans. IAQ drain pans shall comply with ASHRAE Standard 62-2007, Section 5.
   1. The IAQ pans shall be triple sloped, positive draining stainless steel pan. Pan design shall ensure that water drains freely from the pan whether the fan is in operation or stagnant. P-Trap guidelines shall be affixed to the unit. P-Trap components shall be provided and installed by the jobsite contractor.
   2. IAQ drain pan shall allow visual inspection and physical cleaning, including underneath coils, without removal of the coil.

2.04 Doors

A. Air handling equipment doors shall have encapsulated insulation to assure that the quality of the conditioned air is not compromised. Voids and insulation not meeting the stated thermal conductivity R of 12.5 hr-ft2-°F/BTU are unacceptable. Any portion of the door that is not insulated (gaps) or has a thermal conductivity less than 12.5 hr-ft2-°F/BTU [, shall be modified by the contractor to meet the thermal conductivity value previously stated.

B. All doors with access to moving parts shall have provisions for padlocking and meet UL 1995 mechanical protection guidelines.

C. Door frames shall be constructed of extruded aluminum angles.

D. Doors shall be of the same material type as the unit casing.
   1. Doors shall open against positive pressure. Alternatively, if doors opening against positive pressure are not available, a safety mechanism and warning label shall be provided to prevent injury to maintenance personnel.
   2. Access doors shall be provided with a separate handle for each latching point
   3. All access doors shall have stainless steel hardware where available.
   4. All exterior door handles shall be UV rated, corrosion resistant glass reinforced nylon. All door handle hardware shall be galvanized steel.
   5. All access doors shall have roller cam mechanisms to assist in compression of seal. Rotating knife-edge or "paw" latches are not acceptable.

2.05 FANS

A. Fans shall be Class I, II, III and IV, as scheduled, selected to provide the airflow and pressure specified.

B. Fan segments shall be equipped with single width single inlet (SWSI) plenum fans or DWDI housed AF fans as scheduled. All single width single inlet fans (SWSI) fans shall have airfoil (AF) blades. Flat plate blades shall not be acceptable. All DWDI fans whall have airfoil (AF) blades.

C. All airfoil fans shall bear the AMCA Seal. Airfoil fan performance shall be based on tests made in accordance with AMCA standards 210 and comply with the requirements of the AMCA certified ratings program for air and sound. In addition, all airfoil wheels shall comply with AMCA standard 99-2408-69 and 99-2401-82.

D. Fans shall have polished steel shafts sized so the first critical speed is at least 25% over the maximum operating speed for each pressure class. Close tolerances shall be maintained where the shaft makes contact with the bearing. Shaft shall be factory coated after assembly with an anti-corrosion coating.

E. After the pre-balanced fan is installed on the fan skid and isolator rails, the entire fan skid shall be run-balanced at the specified speed to insure smooth and trouble-free operation. The run balance shall include filter-in and filter-out balancing in all three (3) planes, on both sides of the fan assembly at the bearings.
   1. Filter-in measurements shall be taken in the horizontal, vertical and axial planes on the drive and opposite-drive sides of the fan shaft.
   2. Filter-out measurements shall be taken in the horizontal, vertical and axial planes on the drive and opposite-drive side of the fan shaft.

F. Fan assemblies shall be balanced for Filter-in and Filter-out vibrations.
   1. Filter-in measurements shall not exceed .125-in/sec velocity in the horizontal, vertical, and axial planes.
   2. Filter-out measurements shall not exceed .25-in/sec velocity in the horizontal, vertical and axial planes.

J. The fan motor and fan-assembly shall be internally mounted. The fan motor and fan-assembly shall be mounted on a common base to allow consistent belt tension with no relative motion between the fan and motor shafts. The common base shall be independently isolated on a permanently bonded uni-body frame using 2" springs with seismic restraints. Provide OSHA belt guard on belt drive fans.

2.06 BEARINGS AND DRIVES

A. All re-greaseable bearings shall be factory lubricated and equipped with standard hydraulic grease fittings and lube lines extended. Re-greasable bearings provided without factory installed lubrication lines are unacceptable.

B. Fan drives shall be selected for a 1.5 service factor and anti-static belts shall be furnished.

2.07 ELECTRICAL CHARACTERISTICS AND COMPONENTS

A. Fan motors will be furnished in sizes, electrical power and starting characteristics as shown in the schedule.
   1. All fan motors will be built in accordance with the latest standards of the National Electrical Manufacturer's Association (NEMA) and IEEE and shall be rated for continuous duty at full load at 40°C ambient temperature rise and a service factor of 1.15.
   2. Fan motors shall be NEMA design ball bearing type.
   3. Fan motors shall be 900, 1200 or 1800 RPM as indicated on the schedule.
   4. Direct drive plenum fans shall be coupled with appropriately sized motors to nearly match synchronous motor speed, as detailed in the schedule.
   5. All fan motors shall be premium efficiency.
   6. Motors shall be "inverter ready", complying with NEMA STD MG1 PART 31.4.4.2
   7. 120V Incandescent Light shall be provided in all available segments.
   8. 120V convenience outlet shall be provided in fan segment

2.08 HEATING/COOLING COMPONENTS

A. Coil segment length shall be optimized to contain selected coils and access doors. Coils shall be selected to maximize unit tunnel area using 2 x 2 coil arrangements as needed to satisfy required coil face areas.
   1. Coil segment design and coil selection shall not require a drain pan in any downstream section to contain the coil condensate.
   2. All cooling and/or heating coils shall be furnished to meet the performance requirements set forth in the schedule.
   3. All water coils shall have performance certified in accordance with ARI Standard 410 for coil capacity and pressure drop.
   4. All coils must be circuited to operate at design load with water velocity within the ARI range of certified rating conditions.

5. Coil segment side panels shall be removable to allow for removal and replacement of coils, without affecting the structural integrity of the unit.
6. Upstream and downstream segment door clearances shall accommodate a minimum of 2-inches of field-installed external piping insulation.
7. Coil segment shall accommodate full-face height or reduced face height coils, as specified.

B. Cooling Coil Segment shall be provided with a full-width, multi-sloped (IAQ) drain pan that extends downstream a minimum 6" beyond the last coil in the section to provide drain pan access for cleaning and inspection.

C. IAQ Drain Pan design and application shall comply fully with the stated intent of ASHRAE 62-2007. Units with cooling coils shall have drain pans under complete cooling coil section. Drain pans that do not comply with the maintenance requirements stated below will be the responsibility of the contractor to field modify.
   1. The IAQ Drain Pan shall be double sloped, positive draining with stainless steel pan. Pan design must ensure that water drains freely from the pan whether the fan is in operation or stagnant. P-Trap guidelines shall be affixed to the unit. P-Trap components to be provided and installed by the jobsite contractor.
   2. Drain connection shall be located at the lowest point(s) of the pan, per ASHRAE 62-2007. Drain connection shall be of like material as liner, draining to one side of the unit.
   3. IAQ Drain Pan must allow visual inspection and physical cleaning, including underneath coils, without removal of the coil.

D. All vertical coil supporting members (bulkheads) and blockoffs shall be constructed of galvanized steel and shall entirely seal off the coil, preventing air bypass.

E. Coil grommets shall be provided on all coils to completely seal the area between the coil connection and the unit casing. Adhesive rings applied to the casing walls are not acceptable.

F. Drainable Water coils shall be designed to operate at 250 psig design working pressure and up to 300° F and shall be tested with 325 psig compressed air under water. Circuiting shall provide free and complete draining and venting when installed in the unit. All vent and drain connections shall be extended to the outside of the unit casing.

G. The primary surface shall be 5/8" O.D. copper tube. Tubes shall be mandrel expanded to form fin bond and provide burnished, work-hardened interior surface. The tubes shall have a minimum tube wall thickness of 0.035". Specified thickness shall be maintained throughout the tube including brazed U-bends.

H. Extended surface shall consist of die-formed, continuous, aluminum corrugated fins. The fins shall have fully drawn collars to accurately space fins, and to form a protective sheath for the primary surface.

I. Coils with finned height greater than 48 inches shall have an intermediate drain pan extending the entire finned length of the coil. Cooling coils in excess of 48 inches in height shall not be acceptable unless provided with an intermediate drain pan.

J. Coil casing shall be constructed of 16-gauge stainless steel. Tube sheets on each end shall have drawn collars to support tubes. A single intermediate coil support shall be provided on coils with a finned length of more than 62 inches, two (2) intermediate supports above 100 inches in length, and three (3) intermediate supports on coils with a finned length of more than 141 inches. Casing channels shall be free-draining, without depressions to collect moisture and contaminants. Casing channels shall not block fin area.

K. Headers shall be of heavy seamless copper tubing, silver-brazed to tubes. Connections shall be of steel, with male pipe threads, silver-brazed to the headers. A 1/2" MPT, plugged vent or drain tap shall be provided on each connection. All vent and drain connections shall be extended to the outside of the unit casing.

L. Circuiting shall be to provide free draining and venting, through one vent and one drain on each coil, when installed with casing level. Coils shall be circuited, and have connections arranged, for counter-flow of air and water with supply on bottom and return on top of coil headers. Coil circuiting shall provide for design water velocity in tubes without exceeding total water pressure drops in schedule.

2.09 FILTERS

A. Filters and filter segments shall be provided as scheduled. Filter tracks shall be constructed of galvanized steel and be built as an integral part of the unit. Filter media shall be listed Class 2 or Class 1 under U.L. Standard 900 as required by local codes.

B. Filters to be low pressure drop models as manufactured by Camfil Farr.

C. High Efficiency Rigid Filter Segment (RF) shall accommodate 12" media.
   1. Media shall be 12" rigid MERV 15 (95%).
   2. Pre-filter media shall be 30% efficient-MERV 8.

C. Spare sets of media shall be provided.

2.10 DAMPERS

A. Dampers will be of ultra low leak design having galvanized airfoil blades. The damper blades shall be provided with extruded vinyl edge seals and flexible metal compressible jamb seals. Outside air and exhaust air dampers shall have leakage not exceeding 4 CFM/square foot at 1" w.g., complying fully with the requirements of ASHRAE 90.1. Return air and mixed air dampers shall have leakage not exceeding 5 CFM/square foot at 1" w.g. Damper blades shall be opposed acting.

2.11 TESTING

A. Field performance to be witnessed by owner's representative. Owner's representative shall select three units, at time of release, to be tested. Manufacturer shall notify contractor and/or owner 14 days prior to test for witnessing.. A written report shall be provided showing the test results and the test methods used.

B. Perform tests to verify the following performance criteria:
   1. Casing leakage shall not exceed 1% of design CFM at +/-10" w.g. and at design conditions as scheduled.
   2. Casing panel deflection shall not exceed L/240 at +/- 10" w.g.and at design conditions as scheduled. 'L" is defined as the panel span length and 'L/X' is the deflection at panel midpoint.

C. Should a unit fail a test, the unit shall be treated with a permanent remedy at manufacturer's expense until test is successfully passed.

5.6.14 VARIABLE FREQUENCY DRIVES (VFDs)

PART 1-GENERAL

1.01 DESCRIPTION

A. This specification is to cover a complete Variable Frequency motor Drive (VFD) consisting of a pulse width modulated (PWM) inverter designed for use on a standard NEMA Design B induction motor. It is required that the drive manufacturer have an existing:
   1. Sales representative exclusively for HVAC products, with expertise in HVAC systems and controls.
   2. An independent service organization.

B. The drive manufacturer shall supply the drive and all necessary controls as herein specified. The manufacturer shall have been engaged in the production of this type of equipment for a minimum of twenty years.

1.02 QUALITY ASSURANCE

A. Referenced Standards:
   1. Institute of Electrical and Electronic Engineers (IEEE)
      a) Standard 519-1992, IEEE Guide for Harmonic Content and Control.
   2. Underwriters laboratories
      a) UL508C
      b) UL508A
   3. National Electrical Manufacturer's Association (NEMA)
      a) ICS 7.0, AC Variable Speed Drives
   4. IEC 16800 Parts 1 and 2
   5. International Building Code (IBC) (Applies to Base Drive Only)
      a) IBC 2006 Seismic - referencing ASC 7-05 and ICC AC-156

B. Qualifications:
   1. VFDs and options shall be UL listed as a complete assembly. VFD's that require the customer to supply external fuses for the VFD to be UL listed are not acceptable. The base VFD shall be UL listed for 100 KAIC at 480VAC max without the need for input fuses.
      a) The VFD shall have a main fused disconnect switch with a pad lockable handle UL type 1 enclosed with a coordinated package with stand rating of 100 KAIC at 480VAC max and shall be UL labeled as such.
      b) The VFD shall have an option for a main fused or non-fused disconnect switch with a pad lockable handle, a VFD service disconnect switch to isolate the VFD input and a 2 contactor bypass with motor

overload protection in a UL Type 1 enclosure with a coordinated package withstand rating of 100 KAIC at 480VAC max and shall be UL labeled as such.

2. CE Mark – The VFD base drive shall conform to the European Union Electromagnetic Compatibility directive, a requirement for CE marking. The VFD shall meet product standard EN 61800-3 for the First Environment restricted level.

3. Acceptable Manufacturers
   a) Johnson Controls/York AYK Series.
   b) Engineer approved at least 2 weeks prior to bid. Approval does not relieve supplier of specification requirements.

PART 2 – PRODUCTS

2.01 VARIABLE FREQUENCY BASE DRIVES

A. The VFD package as specified herein shall be enclosed in a UL Listed Type 1 enclosure, completely assembled and tested by the manufacturer in an ISO9001 facility. The VFD tolerated voltage window shall allow the VFD to operate from a line of +30% nominal, and -35% nominal voltage as a minimum.

1. Environmental operating conditions: 0 to 40°C continuous. VFD's that can operate at 40° C intermittently (during a 24 hour period) are not acceptable and must be oversized. Altitude 0 to 3300 feet above sea level, less than 95% humidity, non-condensing.
2. Enclosure shall be rated UL type 1 and shall be UL listed as a plenum rated VFD. VFD's without these ratings are not acceptable.
3. An optional UL Type 3R outdoor weatherproof enclosure option shall be available as a standard offering.
4. An optional UL Type 12 enclosure option shall be available as a standard offering.

B. All VFDs shall have the following standard features:

1. All VFDs shall have the same customer interface, including digital display, and keypad, regardless of horsepower rating. The keypad shall be removable, capable of remote mounting and allow for uploading and downloading of parameter settings as an aid for start-up of multiple VFDs.
2. The keypad shall include Hand-Off-Auto selections and manual speed control. The drive shall incorporate "bumpless transfer" of speed reference when switching between "Hand" and "Auto" modes. There shall be fault reset and "Help" buttons on the keypad. The Help button shall include "on-line" assistance for programming and troubleshooting.
3. There shall be a built-in time clock in the VFD keypad. The clock shall have a battery backup with 10 years minimum life span. The clock shall be used to date and time stamp faults and record operating parameters at the time of fault. If the battery fails, the VFD shall automatically revert to hours of operation since initial power up. The clock shall also be programmable to control start/stop functions, constant speeds, PID parameter sets and output relays. The VFD shall have a digital input that allows an override to the time clock (when in the off mode) for a programmable time frame. There shall be four (4) separate, independent timer functions that have both weekday and weekend settings.
4. The VFD's shall utilize pre-programmed application macro's specifically designed to facilitate start-up. The Application Macros shall provide one command to reprogram all parameters and customer interfaces for a particular application to reduce programming time. The VFD shall have two user macros to allow the end-user to create and save custom settings.
5. The VFD shall have cooling fans that are designed for easy replacement. The fans shall be designed for replacement without requiring removing the VFD from the wall or removal of circuit boards. The VFD cooling fans shall operate only when required. To extend the fan and bearing operating life, operating temperature will be monitored and used to cycle the fans on and off as required.
6. The VFD shall be capable of starting into a coasting load (forward or reverse) up to full speed and accelerate or decelerate to setpoint without safety tripping or component damage (flying start).
7. The VFD shall have the ability to automatically restart after an over-current, over-voltage, under-voltage, or loss of input signal protective trip. The number of restart attempts, trial time, and time between attempts shall be programmable.

8. The overload rating of the drive shall be 110% of its normal duty current rating for 1 minute every 10 minutes, 130% overload for 2 seconds. The minimum FLA rating shall meet or exceed the values in the NEC/UL table 430-150 for 4-pole motors.
9. The VFD shall have an integral 5% impedance line reactor to reduce the harmonics to the power line and to add protection from AC line transients. The 5% impedance may be from dual (positive and negative DC bus) reactors, or 5% AC line reactors. VFD's with only one DC reactor shall add AC line reactors.
10. The VFD shall include a coordinated AC transient protection system consisting of 4-120 joule rated MOV's (phase to phase and phase to ground), a capacitor clamp, and 5% impedance reactors.
11. The VFD shall be capable of sensing a loss of load (broken belt / broken coupling) and signal the loss of load condition. The drive shall be programmable to signal this condition via a keypad warning, relay output and/or over the serial communications bus. Relay outputs shall include programmable time delays that will allow for drive acceleration from zero speed without signaling a false underload condition.
12. If the input reference (4-20mA or 2-10V) is lost, the VFD shall give the user the option of either (1) stopping and displaying a fault, (2) running at a programmable preset speed, (3) hold the VFD speed based on the last good reference received, or (4) cause a warning to be issued, as selected by the user. The drive shall be programmable to signal this condition via a keypad warning, relay output and/or over the serial communication bus.
13. The VFD shall have programmable "Sleep" and "Wake up" functions to allow the drive to be started and stopped from the level of a process feedback signal.

C. All VFDs to have the following adjustments:

1. Three (3) programmable critical frequency lockout ranges to prevent the VFD from operating the load continuously at an unstable speed.
2. Two (2) PID Setpoint controllers shall be standard in the drive, allowing pressure or flow signals to be connected to the VFD, using the microprocessor in the VFD for the closed loop control. The VFD shall have 250 ma of 24 VDC auxiliary power and be capable of loop powering a transmitter supplied by others. The PID setpoint shall be adjustable from the VFD keypad, analog inputs, or over the communications bus. There shall be two parameter sets for the first PID that allow the sets to be switched via a digital input, serial communications or from the keypad for night setback, summer/winter setpoints, etc. There shall be an independent, second PID loop that can utilize the second analog input and modulate one of the analog outputs to maintain setpoint of an independent process (i.e. valves, dampers, etc.). All setpoints, process variables, etc., to be accessible from the serial communication network. The setpoints shall be set in Engineering units and not require a percentage of the transducer input.
3. Two (2) programmable analog inputs shall accept current or voltage signals.
4. Two (2) programmable analog outputs (0-20ma or 4-20 ma). The outputs may be programmed to output proportional to Frequency, Motor Speed, Output Voltage, Output Current, Motor Torque, Motor Power (kW), DC Bus voltage, Active Reference, and other data.
5. Six (6) programmable digital inputs for maximum flexibility in interfacing with external devices typically programmed as follows: There shall be a run permissive circuit for damper or valve control. Regardless of the source of a run command (keypad, input contact closure, time-clock control, or serial communications) the VFD shall provide a dry contact closure that will signal the damper to open (VFD motor does not operate). When the damper is fully open, a normally open dry contact (end-switch) shall close. The closed end-switch is wired to an VFD digital input and allows VFD motor operation. Two separate safety interlock inputs shall be provided. When either safety is opened, the motor shall be commanded to coast to stop, and the damper shall be commanded to close. The keypad shall display "start enable 1 (or 2) missing". The safety status shall also be transmitted over the serial communications bus. All digital inputs shall be programmable to initiate upon an application or removal of 24VDC.
6. Three (3) programmable digital Form-C relay outputs. The relays shall include programmable on and off delay times and adjustable hysteresis. Default settings shall be for run, not faulted (fail safe), and run permissive. The relays shall be rated for maximum switching current 8 amps at 24 VDC and 0.4 A at 250 VAC; Maximum voltage 300 VDC and 250 VAC; continuous current rating 2 amps RMS. Outputs shall be true form C type contacts; open collector outputs are not acceptable.
7. Seven (7) programmable preset speeds.

8. Two independently adjustable accel and decel ramps with 1 – 1800 seconds adjustable time ramps.
9. The VFD shall include a motor flux optimization circuit that will automatically reduce applied motor voltage to the motor to optimize energy consumption and audible motor noise.
10. The VFD shall include a carrier frequency control circuit that reduces the carrier frequency based on actual VFD temperature that allows the highest carrier frequency without derating the VFD or operating at high carrier frequency only at low speeds.
11. The VFD shall include password protection against parameter changes.

D. The Keypad shall include a backlit LCD display. The display shall be in complete English words for programming and fault diagnostics (alpha-numeric codes are not acceptable). The keypad shall utilize the following assistants:

1. Start-up assistants.
2. 2. Parameter assistants
3. 3. Maintenance assistant
4. 4. Troubleshooting assistant

E. All applicable operating values shall be capable of being displayed in engineering (user) units. A minimum of three operating values from the list below shall be capable of being displayed at all times. The display shall be in complete English words (alpha-numeric codes are not acceptable):

1. Output Frequency
2. Motor Speed (RPM, %, or Engineering units)
3. Motor Current
4. Calculated Motor Torque
5. Calculated Motor Power (kW)
6. DC Bus Voltage
7. Output Voltage

F. The VFD shall include a fireman's override input. Upon receipt of a contact closure from the fireman's control station, the VFD shall operate at an adjustable preset speed. The mode shall override all other inputs (analog/digital, serial communication, and all keypad commands) and force the motor to run at the adjustable, preset speed. "Override Mode" shall be displayed on the keypad. Upon removal of the override signal, the VFD shall resume normal operation.

G. Serial Communications

1. The VFD shall have an RS-485 port as standard. The standard embedded protocols shall be Modbus, Johnson Controls N2 bus, and Siemens Building Technologies FLN.
2. Optional protocols for LonWorks, BACnet MS/TP, and Ethernet shall be available. Each individual drive shall have an option slot for the protocol in the base VFD. The use of third party gateways and multiplexers is not acceptable. All protocols shall be "certified" by the governing authority. Use of non-certified protocols is not allowed.
3. Serial communication capabilities shall include, but not be limited to; run-stop control, speed set adjustment, proportional/integral/derivative PID control adjustments, current limit, accel/decel time adjustments, and lock and unlock the keypad. The drive shall have the capability of allowing the DDC to monitor feedback such as process variable feedback, output speed / frequency, current (in amps), % torque, power (kW), kilowatt hours (re-settable), operating hours (re-settable), and drive temperature. The DDC shall also be capable of monitoring the VFD relay output status, digital input status, and all analog input and analog output values. All diagnostic warning and fault information shall be transmitted over the serial communications bus. Remote VFD fault reset shall be possible. The following additional status indications and settings shall be transmitted over the serial communications bus – keypad "Hand" or "Auto" selected the ability to change the PID setpoint. The DDC system shall also be able to monitor if the motor is running in the VFD mode over serial communications. A minimum of 15 field parameters shall be capable of being monitored.
4. The VFD shall allow the DDC to control the drive's digital and analog outputs via the serial interface. This control shall be independent of any VFD function. For example, the analog outputs may be used for modulating chilled water valves or cooling tower bypass valves. The drive's digital (relay) outputs may be used to actuate a damper, open a valve or control any other device that requires a maintained contact for operation. In addition, all of the drive's digital and analog inputs shall be capable of being monitored by the DDC system.
5. The VFD shall include an independent PID loop for customer use. The independent PID loop may be used for cooling tower bypass value control, chilled water value control, etc. Both the VFD control PID loop and the inde-

pendent PID loop shall continue functioning even if the serial communications connection is lost. The VFD shall keep the last good set-point command and last good DO & PX commands in memory in the event the serial communications connection is lost.

H. EMI / RFI filters. All VFD's shall include EMI/RFI filters. The onboard filters shall allow the VFD assembly to be CE Marked and the VFD shall meet product standard EN 61800-3 for the First Environment restricted level.

I. All VFD's through 50HP shall be protected from input and output power mis-wiring. The VFD shall sense this condition and display an alarm on the keypad.

J. FEATURES – Features to be furnished and mounted by the drive manufacturer. All features shall be UL Listed by the drive manufacturer as a complete assembly and carry a UL label.
A complete factory wired and tested VFD with door interlocked, pad lockable fused disconnect switch, UL type1 enclosed with a coordinated package withstand rating of 100 KAIC at 208/230/480VAC max and shall be UL labeled as such, disconnect that will disconnect all input power from the drive and all display shall be in complete English words (alpha-numeric codes are not acceptable):

1. Output Frequency
2. Motor Speed (RPM, %, or Engineering units)
3. Motor Current
4. Calculated Motor Torque
5. Calculated Motor Power (kW)
6. DC Bus Voltage
7. Output Voltage

K. The VFD shall include a fireman's override input. Upon receipt of a contact closure from the fireman's control station, the VFD shall operate at an adjustable preset speed. The mode shall override all other inputs (analog/digital, serial communication, and all keypad commands) and force the motor to run at the adjustable, preset speed. "Override Mode" shall be displayed on the keypad. Upon removal of the override signal, the VFD shall resume normal operation.

L. Serial Communications

1. The VFD shall have an RS-485 port as standard. The standard embedded protocols shall be BACnet, Modbus, Johnson Controls N2 bus, and Siemens Building Technologies FLN.
2. BACnet Protocol Required
3. Optional protocols for LonWorks, BACnet MS/TP, and Ethernet shall be available. Each individual drive shall have an option slot for the protocol in the base VFD. The use of third party gateways and multiplexers is not acceptable. All protocols shall be "certified" by the governing authority. Use of non-certified protocols is not allowed.
4. Serial communication capabilities shall include, but not be limited to; run-stop control, speed set adjustment, proportional/integral/derivative PID control adjustments, current limit, accel/decel time adjustments, and lock and unlock the keypad. The drive shall have the capability of allowing the DDC to monitor feedback such as process variable feedback, output speed / frequency, current (in amps), % torque, power (kW), kilowatt hours (re-settable), operating hours (re-settable), and drive temperature. The DDC shall also be capable of monitoring the VFD relay output status, digital input status, and all analog input and analog output values. All diagnostic warning and fault information shall be transmitted over the serial communications bus. Remote VFD fault reset shall be possible. The following additional status indications and settings shall be transmitted over the serial communications bus – keypad "Hand" or "Auto" selected the ability to change the PID setpoint. The DDC system shall also be able to monitor if the motor is running in the VFD mode over serial communications. A minimum of 15 field parameters shall be capable of being monitored.
5. The VFD shall allow the DDC to control the drive's digital and analog outputs via the serial interface. This control shall be independent of any VFD function. For example, the analog outputs may be used for modulating chilled water valves or cooling tower bypass valves. The drive's digital (relay) outputs may be used to actuate a damper, open a valve or control any other device that requires a maintained contact for operation. In addition, all of the drive's digital and analog inputs shall be capable of being monitored by the DDC system.
6. The VFD shall include an independent PID loop for customer use. The independent PID loop may be used for cooling tower bypass value control, chilled water value control, etc. Both the VFD control PID loop and the independent PID loop shall continue functioning even if the serial communications connection is lost. The VFD shall

keep the last good set-point command and last good DO & PX commands in memory in the event the serial communications connection is lost.

M. EMI / RFI filters. All VFD's shall include EMI/RFI filters. The onboard filters shall allow the VFD assembly to be CE Marked and the VFD shall meet product standard EN 61800-3 for the First Environment restricted level.

N. All VFD's through 50HP shall be protected from input and output power mis-wiring. The VFD shall sense this condition and display an alarm on the keypad.

O. OPTIONAL FEATURES – Optional features to be furnished and mounted by the drive manufacturer. All optional features shall be UL Listed by the drive manufacturer as a complete assembly and carry a UL label.

1. A complete factory wired and tested VFD with door interlocked, pad lockable fused disconnect switch, UL type 1 enclosed with a coordinated package withstand rating of 100 KAIC at 208/230/480VAC max and shall be UL labeled as such, disconnect that will disconnect all input power from the drive and all internally mounted options. Disconnect shall be mounted in a UL Type 1 enclosure.
2. The following relay (form C) outputs shall be provided:
    a) System started
    b) System running
    c) Drive fault

P. The digital inputs for the VFD with bypass option shall accept 120V. Customer Terminal Strip – provide a separate terminal strip for connection of freeze, fire, smoke contacts, and external start command. All external safety interlocks shall remain fully functional whether the system is in Hand, Auto, or Bypass modes. The remote start/stop contact shall operate in VFD and bypass modes.

Q. The VFD shall include a "run permissive circuit" that will provide a normally open contact whenever a run command is provided (local or remote start command in VFD mode). The VFD system shall not operate the motor until it receives a dry contact closure from a damper or valve end-switch. When the VFD system safety interlock (fire detector, low limit, high static pressure switch, etc) opens, the motor shall coast to a stop and the run permissive contact shall open, closing the damper or valve.

PART 3 – EXECUTION

3.01 INSTALLATION

A. Installation shall be the responsibility of the mechanical contractor. The contractor shall install the drive in accordance with the recommendations of the VFD manufacturer as outlined in the installation manual.

B. Power wiring shall be completed by the electrical contractor. The contractor shall complete all wiring in accordance with the recommendations of the VFD manufacturer as outlined in the installation manual.

3.02 START-UP

A. Certified factory start-up shall be provided for each drive by a factory authorized service center. A certified start-up form shall be filled out for each drive with a copy provided to the owner, and a copy kept on file at the manufacturer.

3.03 PRODUCT SUPPORT

A. Factory trained application engineering and service personnel that are thoroughly familiar with the VFD products offered shall be locally available at both the specifying and installation locations. A 24/365 technical support line shall be available on a toll-free line.

3.04 WARRANTY

A. Warranty shall be 24 months from the date of certified start-up, not to exceed 30 months from the date of shipment. The warranty shall include all parts only. There shall be 365/24 support available via a toll free phone number.

5.6.16 RECONDITIONING OF EXISTING EQUIPMENT

D. HVAC equipment to be reused and reconditioned shall be as noted and specified. Provide all work to clean, repair, and/or replace components to first class operating condition. Provide a full one year warranty on all work performed.

E. Provide a written estimate of not to exceed cost to do work and submit to Owner for approval. All work performed shall be guaranteed for one year. Provide the following testing, adjusting, and maintenance as required, but not limited to, the following:

1. Clean the interior and exterior of the unit entirely.
2. Check and test the operation of all equipment and confirm equipment is operating at desired capacity.
3. Check and test all controls, safeties, limits, etc. Replace all defective components.
4. For air handling units, check, test and adjust outside air, exhaust air, and return air dampers and actuators for proper operation. Replace all defective components. Check, test, and adjust the supply air flow (CFM), outside air flow (CFM), and return air flow (CFM). Provide adjustments of belts, pulleys, and dampers to obtain the new specified air flow rates in CFM. Replace belts and pulleys as required. Provide new air filters (30 percent efficiency panel filters).
5. Provide a full written typed report on the existing condition of the unit including all test data recorded, replaced or repaired parts, balancing and adjusting performed and submit to Owner for Engineer review.
6. Provide prebalancing for all hydronic and air systems
7. Recondition all equipment as per manufacturer's recommendations.
8. Testing and balancing as specified above.

F. The following equipment shall be reconditioned:
1. Induction units

END OF SECTION

6 Plumbing

6.1 Overview

This Basis of Design (BOD) section describes the scope of work related to plumbing in the McCormack Building.

The proposed plumbing fixtures and equipment has been indicated as part of these Basis of Design documents. This Basis of Design (BOD) will establish plumbing fixture, equipment, and system types as well as describe the scope of work to be provided by the Design Build team. The Design build team, specifically designer of record, is responsible for all plumbing fixture, equipment, system selections, equipment capacities, coordination with all other trades, cutting and patching of existing, and final design of system. All work shall comply with all code requirements all listed in this BOD. The final deliverable from the Design Build team shall be to provide plumbing fixture, equipment and drawing submittals. Refer to the general requirements of the BOD for additional information.

6.2 Codes and Standards

The following codes and standards apply to the scope of work described in this section:

- Massachusetts State Building Code, 8th Edition
- Massachusetts Plumbing and Fuel Gas Code SMR-248
- Massachusetts Architectural Access Board
- International Plumbing Code, Latest Edition
- International Handicap Code, Latest Edition

6.3 Design Criteria

6.3.1 Field Survey of Existing Conditions

The design build team shall conduct a field survey to confirm all existing conditions to confirm the quantity and model information of all existing fixtures and flush valves, on the water closets and urinals. Provide a summary of all existing conditions, broken down by water closets with 1.6 GPF flush valves and urinals with 1.0 GPF flush

valves.

The design build team shall document any other known deficiencies in the existing plumbing system, fixtures, or equipment that may need upgrading for the building upgrades to operate properly.

6.3.2 Existing Conditions and Proposed System Upgrades

Below is an overview of the existing conditions and proposed system upgrades associated with this building. The design build contractor is responsible for determining all existing conditions, including but not limited to number of existing plumbing fixtures. The quantities below are approximated. The design build team shall confirm actual quantities. Their scope of work will be based on their confirmed quantities.

EXISTING CONDITIONS

Plumbing Fixture	Quantity
3.5 GPF Water Closets	232
1.6 GPF Water Closets	27
1.6 GPF Urinals	63
1.0 GPF Urinals	6

PROPOSED SYSTEM UPGRADES

Existing System	Proposed Upgrades
3.5 GPF Water Closets	New 1.28 GPF Fixtures and Flush Valves
1.6 GPF Water Closets	No Upgrades
1.6 GPF Urinals	New 0.125 GPF Fixtures and

	Flush Valves
1.0 GPF Urinals	No Upgrades

6.3.3 Description of Work

The plumbing fixtures and associated equipment were selected by KS to approximate the water savings. The design build team shall be responsible for the design and provide final plumbing fixture and associated equipment selections and water saving calculations to confirm the water savings. Realized by these calculations, the design build team shall provide final fixture and equipment selections based on the performance criteria described in the KS documentation.

Replace all the existing 1.6 GPF flush valves installed on the existing water closets by installing the ultra-high efficiency 1.28 GPF manual flush valves. Replace all the existing 1.0 GPF flush valves installed on the urinals by installing the ultra-high efficiency 0.125 GPF manual flush valves. The plumbing fixtures located on the 1st and 13th floors have recently been replaced and are not included in this scope of work.

The design build team shall provide all required work to upgrade, modify, and repairs to the existing plumbing fixtures, equipment, and system deficiencies for a properly working system. The design build team shall notify the owner of any required system shut downs a minimum of 48 hours in advance.

6.3.4 Plumbing Fixtures and Equipment Selection

The following is the minimum quality of plumbing fixtures and Equipment that shall be incorporated for this project.

6.3.4.a Water Closet Flush Valve

The flush valve shall be similar to Zurn #ZTR6200EV, 1.28 GPF sensor operated, battery powered water closet flush valve.

6.3.4.b Water Closet Fixture

The water closet shall be similar to Zurn #Z5615-BWL HET Elongated Wall Hung EcoVantage Flush Valve Toilet System. 1.28 gallons per flush, 1-½" top spud.

Toilet Seat: Water closet seat shall be similar to Zurn #Z5955SS-EL Elongation,

standard white, open front toilet seat less cover with stainless steel check hinge.

6.3.4.c Urinal Fixture and Flush Valve — The urinal fixture and flush valve shall be similar to Zurn #Z5798.205.00 "The Pint" 1/8 GPF, EcoVantage, Ultra Low Consumption, Battery Powered Urinal System, with ZEG6003EV high efficiency flush valve, 1/8 gallon per flush, ¾" top spud, 14" extended rim for handicapped compliance.

6.4 Testing

6.4.1 Testing, adjusting, and balancing of all related plumbing fixtures, piping, equipment, and systems shall be per manufacturer's requirements and latest edition of the plumbing code.

6.5 Specifications

6.5.1 PIPING AND FITTINGS

A. General

Pipe materials and fitting materials shall be as indicated in Schedule of Pipe and Fitting Materials.

B. Schedule of Pipe and Pipe Fitting Materials

SERVICE	SYSTEMS DESCRIP-TION	PIPE SIZE	PIPE MATERIAL	JOINTS	FITTING MATERIAL	FITTING RATING PSI/CLASS/ WEIGHT
Cold Water and Non-Potable Water	CW	All	Copper, B88, Type L	Soldered 95/5 Tin Antimony	Wrought Copper, B16.22	Class 150

5.6.3 VALVES

A. Valves on hot and cold water services shall be 125 psi unless noted otherwise.

B. Valves shall have name of manufacturer and guaranteed working pressure cast or stamped on bodies. Valves of similar type shall be by single manufacturer. Provide chain operators for valves 7 feet and higher above floor.

1. Valves shall be rated 175 psi maximum working pressure, iron body, threaded lug with resilient EPDM seats, bronze disc and 416 stainless stem, by Centerline, DeZurik, Keystone, or Bray.

2. Test valves at 110% of rated pressure.

C. Provide lead free bronze body ball valves RPTFE seats and stuffing box ring, chromium plated ball valve with solder ends. Ball valves shall be used for domestic and non-potable water services in sizes 2" and smaller. Do not use ball valves for balancing service. Valves on insulated piping shall have 2" extended stems. Valves shall be by Apollo, Cannon, Nibco, Milwaukee, or Watts. Valves shall be rated 600 psi wog.

D. Check valves sized 2 1/2" and larger shall be iron body, flanged ends, bronze mounted, swing pattern. Check valves 2" and smaller shall be bronze, screwed ends, swing pattern, by APCO, Milwaukee, Mueller or Stockham.

E. Provide unions for threaded end valves to facilitate removal from pipe.

6.5.2 PIPE INSULATION

A. Insulation shall be fibrous glass insulation with factory-applied fire retardant vapor barrier jacket with K factor of 0.21 at 75°F mean temperature: by Owens Corning, Certain-Teed, Manville or Knauf, installed as required by manufacturer. ASTM E-84 fire hazard ratings shall be 25 flame spread, 50 smoke developed and 50 fuel contributed.

B. Apply insulation after systems have been tested, proved tight and approved by Designer. Remove dirt, scale, oil, rust and foreign matter prior to installation of insulation.

C. No leaks in vapor barrier or voids in insulation will be accepted.

D. Insulation and vapor barrier on piping which passes through walls or partitions shall pass continuously through sleeve, except that piping between floors and through fire walls or smoke partitions shall have space allowed for application of approved packing between sleeves and piping, to provide fire stop as required by NFPA. Seal ends to provide continuous vapor barrier where insulation is interrupted.

E. Insulate flexible connections to same thickness and with same material as adjoining pipe insulation.

F. Provide fibrous dual temperature insulation with factory applied vapor barrier jacket on non-potable water piping, drain, hot and cold water piping, unless noted otherwise.

G. Provide longitudinal lap and 6" wide vapor barrier joint seal strips secured with approved adhesive.

H. Seal ends of pipe insulation and seal insulation to pipe with approved fire retardant vapor barrier, at flanges, valves and fittings and at intervals of no more than 21 feet on continuous runs of piping.

I. Secure covers on concealed pipe with metal bands at least 3/4" wide and no more than 18" apart, spaced to hold ends and centers of each section.

PIPE HANGERS AND SUPPORTS

A. Provide pipe stands, supports, hangers and other supporting devices in accordance with ANSI B31.9 and MSS-69, as necessary to support work required by Contract Documents.

B. Secure vertical piping to building construction to prevent sagging or swinging.

C. Space hangers for horizontal piping as follows:

Pipe Size	Rod Diameter	Maximum Spacing
Up to 1 1/4"	3/8"	8 ft. 0"
1 1/2 and 2"	3/8"	10 ft. 0"
2 1/2 and 3"	½"	10 ft. 0"
4 and 5"	5/8"	12 ft. 0"
6"	3/4"	12 ft. 0"
8" and over	7/8"	12 ft. 0"

D. Horizontal copper tubing shall have maximum hanger spacing of 5 ft. for tubing 1 1/4" dia. and smaller and 10' for tubing 1 1/2" and larger. Maximum spacing for PVC pipe hangers shall be 4'.

E. Reduce spacing to a maximum of 10'-0" apart, regardless of pipe size, as necessary for fittings, valves and other concentrated loads.

F. Support piping 4" dia. and larger from structure with pipe roll hangers with adjustable steel rod hangers, sized to accommodate insulation.

G. Support piping 3" dia. and under from structure with Carpenter and Patterson Fig. 100 clevis hangers or approved equal.

H. Hangers shall be by Carpenter and Patterson, F & S, or Grinnell Co. Figure numbers of Carpenter and Patterson are specified to establish standards of quality for performance and materials.

I. Provide spring hangers with travel stops as specified in Vibration Isolation Paragraph where necessary and where shown on Drawings.

J. Pipe supports for 4" and larger pipe and insulated high temperature piping shall have welded inserts of equal thickness to insulation to prevent compression of insulation. Other insulated pipe shall have 12", 14 GA shields at hangers, composed of 180°coverage of galvanized sheet metal and high density, pre formed, rigid insulation. Where rollers are required, shield shall be steel pipe.

K. Hangers for horizontal lines shall be vertically adjustable to obtain pitch requirements of Piping Paragraph.

6.5.3 RECONDITIONING OF EXISTING EQUIPMENT

A. All existing PLUMBING equipment to be reused and reconditioned shall be as noted and specified. Provide all work to clean, repair, and/or replace components to first class operating condition. Provide a full one year warranty on all work performed.

B. Provide a written estimate of not to exceed cost to do work and submit to Owner for approval. All work performed shall be guaranteed for one year. Provide the following testing, adjusting, and maintenance as required, but not limited to, the following:

1. Clean the inside of the unit entirely.
2. Check and test all components, controls, piping, valves, etc. Replace all defective components.
3. Check and test all controls, safeties, limits, etc. Replace all defective components.
4. Provide a full written typed report on the existing condition of the unit including all test data recorded, replaced or repaired parts, testing and adjusting performed and submit to Owner for Engineer review.

END OF SECTION

7 Fire Protection

7.1 General Design Overview

Fire protection systems are presently provided throughout this facility. Wet pipe sprinkler systems are the primary type of sprinkler protection in each building.

7.2 Scope of Work

The scope of work shall include modifying the existing fire protection system as required to service the modifications to the new and existing mechanical rooms.

Work shall include but not limited to the following:

Relocate existing wet sprinkler heads and branch piping as required based on modifications to the architectural and mechanical systems in the existing and new mechanical rooms.

Provide all necessary fire protection design, narratives and hydraulic calculations required for permit.

7.3 Materials and Equipment

Piping for the wet standpipe and automatic sprinkler systems will be black steel, Schedule 10 for piping 2.5" or larger, and schedule 40 for all piping 2" or less. All piping, fittings, devices, and their installation will comply with the requirements of NFPA 13 & 14. All material and equipment shall be UL listed for fire protection service. Piping for dry pipe systems shall be galvanized.

7.4 Wet Pipe Sprinkler System

Provide Wet Pipe sprinkler protection as follows: Light hazard areas (offices, corridors, rest rooms, lunchrooms, training rooms) – 0.10 gpm/ft sq. Ordinary hazard, Group 1, (all areas except maintenance facility and Light hazard areas) – 0.15 gpm/ft sq. Ordinary Hazard, Group 2 (maintenance facility, including outside, covered areas), 0.20 gpm/ft sq. Design areas 1500 ft^2. Spaces with suspended ceilings shall be protected with recessed sprinklers and spaces without suspended ceilings (open to slab or roof deck above) shall

be protected with upright sprinklers.

Sprinkler systems design shall comply with NFPA 13.

7.5 Portable Fire Extinguishers

Multi-purpose dry chemical extinguishers shall be provided in all spaces. All extinguishers shall have a minimum of a 2A:20B:C rating. All fire extinguishers shall be located based on a maximum travel distance of 75 feet, except those in mechanical/electrical rooms an maintenance facility, where locations shall be based on a maximum travel distance of 50 feet.

Fire extinguishers shall be located in accordance with and comply with the requirements of NFPA 10.

8 Building Automation and Controls

8.1 Overview

The existing Central utility plants (chilled water & hot water plants) and air handling systems will be equipped with a new Building Automation System (BAS) based on digital controllers and distributed processing. The Building Automation System (BAS) will include control and monitoring functions including all new or existing boilers, chillers, cooling towers, air handling units, exhaust fans, induction units and pumps. A new front end computer will be provided in the BSB office. All new graphics will be provided for each system.

All new equipment shall be fully integrated into its respective building's Building Automation System (BAS), based on digital controllers and distributed processing. The (BAS) will include control and monitoring functions for all new and existing air handling units (AHU), chiller plants, hot water plants and induction units. All associated pumps shall also be included.

All existing pneumatic logic and actuation associated with the systems mentioned above within the existing building shall be replaced with new DDC logic and electric actuation.

The BAS overall system design will be modular and flexible. The major system components include Secure BAS Data Servers; Building-Level BAS Network Controllers with interfacing Gateway Layers to third party control systems; Web server for remote access; Floor-Level Unitary and Application-Specific BAS Controllers; BAS Operator Workstations; Floor-Level Graphical User Interfaces (GUIs); BAS portable user interface (laptop PC); BAS-dedicated Floor-Level networks and dedicated Building-Level Ethernet Networks.

The BAS will use an Ethernet communications as its Primary Communication Network between Floor Level Network Controllers and User Workstations. The BAS Ethernet will run over the existing BSB LAN.

Floor Level Networks connected to Floor Level Controllers will interconnect control devices, instrumentation, Graphical User Interfaces (GUI), and Applications Specific Controllers (ASC). Floor Level Networks will only serve the floor its Floor Level Network Controller is on.

The BAS provider will supply a "turnkey" system installation and will have overall single-source responsibilities for the entire system including the equipment and functions.

8.2 General BAS Criteria

The BAS Controller categories are:

- BAS: Microprocessor-based Controller with high capacity I/O point modules, algorithms, and application programs such as large Air Handling Units and Exhaust Fans.
- UC/ASC: Microprocessor-based Auxiliary Controller with limited capacity I/O points, limited algorithms, and limited application programs for control and/or monitoring of equipment such as Fan Coil Units, Unit Heaters, and Space Sensors.
- TCU: Microprocessor-based Controller with application specific I/O point capacity, algorithms and application programs for control and/or monitoring terminal boxes for Office and misc. Support spaces.

Stand-alone microprocessor-based remote controller panels and application-specific controllers shall be grouped to handle local services, one for each air handling unit, hydronic system, etc. Controllers shall function on a stand-alone basis independent of and without intervention by any other component of the BAS system. Global data shall be exchanged among BAS Controllers/Gateways and between BAS Controllers/Gateways and the Operator Workstations and GUI panels.

Field equipment panels (FEPs) shall reside adjacent to or integrated with BAS Controllers and shall house transducers, relays, pressure gauges, override switch, wiring and other interface hardware required for system operation.

Major equipment will be supplied with Hand-Off-Auto control switches to permit manual operation of this equipment (such as fans, pumps, etc.).

Hand-Off-Auto switch position will be monitored (at motor control centers) for all air handling units, and selected exhaust fans and pumps. The Operator Workstations shall be alarmed whenever the hand-off-auto switch is not in the auto position.

Mechanical and Electrical Equipment specified with microprocessor-based controllers with communications capability will utilize a device level bus to interface with the BAS.

The stand-alone BAS/DDC controllers will perform their functions, pressure and flow control as required for system operation and environmental stability and/or adjustability.

As much as possible, the design shall specify products that are factory calibrated to minimize field labor.

8.3 Flexibility Criteria

The Automation and Control distribution systems will be designed to afford limited flexibility for future modification. This will be accomplished primarily by providing access to the control devices and by applying a modular layout BAS panels.

The Automation and Control distribution systems will not be sized for any additional flexibility.

8.4 Expansion Criteria

The BAS/DDC System controllers will be specified with capacity to handle the currently planned areas as well as an additional 25 percent spare space module capacity to handle additional inputs or outputs (I/O) to the control and monitoring system.

8.5 Reliability and Safety

The BAS/DDC controllers and BAS Operator Workstation / GUI panels will be powered by standby power source with a local Uninterruptible Power Supply (UPS) to allow a bump-less transition upon an interruption of power from normal to standby power and from standby power to normal.

The BAS/DDC controllers will sense loss of primary power and availability of standby power. It will initiate shutdown and restoration sequences for standby and normal power. The system will prevent cascading alarms or lengthy reboot or communication fault problems from interrupting critical operator interface during a power disturbance or other emergency sequence.

In the event of loss of power, the BAS/DDC controllers will conduct an orderly shutdown of all connected equipment, restore themselves into operation after recovering from the power loss and provide auto-restart to all building mechanical systems. The restart of the building systems as well as other systems on the site will be staggered. The design shall use the BAS to restart this building in a sequence coordinated with the overall building power restart sequence.

Control systems will be designed to fail in a safe mode as defined by the system and equipment operational requirements.

In the event of loss of communications between the BAS/DDC controllers and the Operator Workstation, the equipment and systems will be controlled in their normal mode using the last commands and setpoints received by the BAS/DDC controllers until either communication is restored or manual overrides are activated at the BAS/DDC panel.

If the communication network fails or a BAS/DDC controllers collecting and reporting global data fails, the BAS/DDC controllers shall continue to function utilizing the last data received. On communication failure of any BAS/DDC controllers, the systems will continue to operate based on last command.

BAS/DDC controller point modules with local manual controls will be provided as a backup to selected control loops (such as outdoor air damper position control, etc.).

9 Electrical

9.1 Applicable Codes

- 527 CMR 12.00 Massachusetts Electrical Code (MEC)
- 780 CMR 34.00 Existing Structures
- 780 CMR 13.00 Energy Efficiency
- *Illuminating Engineering Society of North America (IESNA)* Lighting Handbook, (Tenth edition)

9.2 Overview

This Basis of Design (BOD) section describes the scope of work related to electrical. See Section 9.11 for further information on the electrical scope in regards to support of HVAC upgrades and new electrical equipment for the McCormack building.

The proposed system types, equipment types, and capacities have been estimated as part of these Basis of Design documents. This Basis of Design will establish scope and system types as well as describe the scope of work to be provided by the Design Build team. The Design build team, specifically designer of record, is responsible for all final calculations, equipment selections, equipment capacities, coordination, cutting and patching, and final design of system. Final system sizing shall be based on weather data, indoor conditions and code requirements all listed in this BOD.

The final deliverable from the Design Build team shall be to provide final calculations, drawings and submittals. Refer to the general requirements of the BOD for additional information.

9.3 Power Distribution

The McCormack building is served by two separate area network services, each at 480/277V in a main-tie-main configuration.

9.4	Utilization Voltages	The building has 480/277 V, 3 Phase, 4 Wire service for HVAC loads along with some lighting loads. The remainder of the lighting loads and all of the receptacle loads are fed at 120/208 V.
9.5	Electrical Methods and Materials	
9.5.1	Panelboards	Reuse existing if possible, otherwise panelboards, will be bolt-on type with copper bus. Lighting and receptacle panels will be Square D NQ/NF series or equal. Distribution panels will be Square D “I-Line” or equal.
9.5.2	Circuit Breakers	Reuse existing if possible, otherwise, new circuit breakers, to match existing panelboard manufacturer, model number and AIC rating of panel.
9.5.3	Conduits	Conduits will be installed as follows: PVC will be used for underground conduits. Galvanized conduit (GRC) will be used for all wiring above 600 volts. Electrical metallic tubing (EMT) will be used for feeder and branch circuit wiring in and for communications, fire alarm and signal wiring. Type MC cable may be used for fixture whips above accessible ceilings and for concealed receptacle wiring in offices. Runs of MC cable will be limited to 6 feet. Flexible metal conduit will be used for connections to equipment subject to vibration or movement. Liquid-tight flexible conduit will be used for final motor connections in mechanical rooms. The minimum conduit size will be 3/4 inch. Conduits will generally be run overhead and concealed in walls. No conduits will be installed in slabs.
9.5.4	Wiring	Wiring will be as follows:

All wiring will be copper. Minimum size will be #12 AWG for power wiring and #14 AWG for control wiring.

Insulation will be 600 volts, type THHN 90°C/THWN, 75°C for wire sizes #14 through #8 AWG and 600 volt type XHHW for #6 AWG and larger.

Conductors shall be of soft drawn 98% minimum conductivity properly refined copper, solid construction where No. 10 AWG and smaller, stranded construction where No. 8 AWG and larger.

Mineral-Insulated Metal-Sheathed Fire-Resistive Cables (Type MI) - Cables shall consist of a factory assembly of one or more solid copper conductors insulated with highly-compressed magnesium oxide and enclosed in a seamless, liquid-and -gas-tight continuous copper sheath. Cables shall be rated for 600 volts. Cable shall comply with Article 330 of the National Electrical Code. Cables shall be classified by Underwriters Laboratories, Inc. as having a 2-hour fire resistive rating. Cable terminations shall be made with UL listed mineral-insulated cable fittings. Cables shall be as manufactured by Pyrotenax USA, Inc. or approved equal.

Each circuit will be run with a dedicated neutral conductor. Shared neutrals will not be permitted.

9.5.5 Wiring Devices

Wiring devices will be specification grade, minimum 20 amperes.

Wall switches for lighting control will be rated 120/277 volts. Wiring device switches shall be A.C. specification grade, 20 amps on 120 volt circuits. Switches shall be mounted 48" to center line above finished floor unless noted otherwise.

9.5.6 Pull and Junction Boxes

Where necessary to terminate, tap off, or redirect multiple raceway runs or to facilitate conductor installation, furnish, and install appropriately designed boxes. Boxes shall be fabricated from code gauge steel assembled with corrosion resistant machine screws. Box size shall be as required by Code. Where intermediate cable supports are necessary because of box dimensions, provide insulated removable core brackets to support conductors. Junction boxes are to be equipped with barriers to separate circuits. Where splices are to be made, boxes shall be large enough to provide ample work space. All conductors in boxes are to be clearly tagged to indicate characteristics. Boxes shall be supported independently of raceways. Junction boxes in moist or wet areas shall be galvanized type. Boxes larger than 4 inches square shall have hinged covers. Boxes larger than 12 inches in one dimension will be allowed to have screw fastened covers, if a hinged cover would not be capable of being opened a full 90 degrees due to installation location.

9.6 Grounding

System and equipment grounding will be provided in accordance with the National Electrical Code.

9.7 Fire Alarm

No changes to the existing fire alarm system are included in the scope of this project.

9.8 Calculations and Evaluations

Provide calculations to maintain lighting levels are required by code.

9.9 Lighting

9.9.1 Introduction

The lighting systems (luminaires and controls) used will satisfy energy requirement as well as visual and environmental requirements of the building. The evaluation and associated recommendations will comply with the local energy code and IESNA. Commercial specification grade luminaires shall be recommended as required. Also, new advanced, energy-efficient, lighting technologies and designs considerations will

be evaluated to best satisfy all energy requirements.

A small number of fixtures currently utilize T12 lamping and magnetic ballasts, as well as incandescent technology. New, higher efficiency lamping shall be recommended for those areas where inefficient lighting currently exists.

The existing lighting control scheme for the McCormack building is manual zonal control. The building is manned 24/7 by a controller. Normal operation is from 7AM to 7PM Monday-Friday, with half days on Saturdays. Outside of that window, zones are energized by requesting or planning ahead with the controller. Each of the 21 floors has approximately 29 zones.

Individual offices/conference rooms typically are not on their own electrical circuit, and do not have local lighting control. There entire zone is one circuit and operates (on/off) as a whole unit.

A new wireless control and ballast system (or similar) shall be recommended for each floor, to be integrated with the customer's BMS system for individual addressing and scheduling of the lighting system for the entire building, apart from the Mechanical levels (7 and 22). This system will include wireless/addressable occupancy and daylight harvesting sensors (or similar) which shall integrate with the selected dimmable ballasts in areas outlined in Section 9.11. Wireless sensors are recommended in order to minimize impact to existing power wiring. Also, since each floor is controlled via a zonal method, local controllers are required for enclosed spaces in order to provide local dimming and on/off control to increase energy savings.

If a wireless system is not recommended, a system which has minimal impact to the installed power wiring should be utilized in order to minimize the need for re-circuiting the entire building to separate circuits for local/individualized control.

9.9.2 Sustainability Goals

All interior building lighting will meet or exceed lighting power density amounts required to comply with ASHRAE/IESNA Standard 90.1-2010.

Utilize lamps with maximum luminous efficacy when possible.

9.9.3 Control Systems

Motion sensors (occupancy/vacancy), daylight harvesting sensors (photocells) and local controls shall be recommended in specific areas to reduce energy costs and reduce heat load, to greatly extend the lamp life of various lamp sources, and to create levels of visual comfort and interest while addressing energy conservation.

9.9.3.a Occupancy Sensors

Provide motion sensors for use in specified spaces. These sensors shall be wireless (or similar to eliminate the need for additional wiring), ceiling or corner-mounted, wide-range, with a minimum 600 square feet of coverage (approximately 14.5 feet radius at 9 feet mounting height, 360 degree coverage) for working-at-desk top type motion. Sensors shall be Occupancy (Automatic On/Automatic off) and where local control is provided adjustable to Vacancy (Automatic Off/Manual On) settings.

Sensors shall provide volumetric coverage without gaps in coverage within controlled area.

Housings shall be impact-resistant plastic. Color to be approved by owner.

Sensors shall have adjustable time delay. Provide a shortened time delay feature for testing.

Coverage of sensors shall remain constant after sensitivity control has been set. No reduction shall occur in coverage due to cycling of air conditioning or heating fans.

Sensors shall have readily accessible, user-adjustable controls for time delay and sensitivity.

Sensors shall be able to be operated in parallel to allow for coverage of large areas.

All sensors shall be manufactured by same company and shall be aesthetically compatible, for example, from same product line or generation of products.

9.9.3.b Photocells

Provide indoor daylight sensors for controlling perimeter lighting circuits where sufficient daylight exists to allow the sensor to operate. Daylight sensors shall be wireless (or similar to eliminate the need for additional wiring) and ceiling mounted.

Housings shall be impact-resistant plastic. Color to be approved by owner.

Sensors shall have adjustable light level set point from minimum 10 to 100 foot-candles.

Coverage of sensors shall remain constant after sensitivity control has been set.

Sensors shall have readily accessible, user-adjustable controls for sensitivity. Controls shall be recessed to limit tampering.

In the event of sensor failure, a bypass manual "override on" shall be provided on each sensor. When bypass is utilized, lighting shall remain on constantly or control shall divert to a wall switch until sensor is replaced.

Sensors shall be able to be operated in parallel to allow for coverage of large areas.

All sensors shall be manufactured by same company and shall be aesthetically compatible, for example, from same product line or generation of products.

9.9.3.c Local Controllers

Provide wireless (or similar to eliminate the need for additional wiring) local controller for enclosed offices, conference rooms, storage rooms, etc. In order to provide local dimming/on/off control for users within the enclosed spaces.

Controller shall integrate with recommended lighting control system (controllers, ballasts, sensors, etc.).

9.9.3.d Circuit Control Units

Circuit control unit(s) shall be provided as required to integrate lighting control system. Unit(s) shall integrate with occupancy and daylight harvesting sensors as well as dimmable ballasts.

Unit(s) shall be programmable and shall integrate with the building BMS system.

9.9.4 Dimmable Ballasts

Ballasts shall be digitally addressable.

Suitable for dimming fluorescent lamp from 100 to 10 percent of nominal light output.

Suitable for starting lamp at any light output setting without having to ramp up to full light output first.

Class “A” sound rating or quieter.

Ballasts shall integrate with lighting control system.

9.9.5 Illuminance Levels

Illumination values will be derived from the *Illuminating Engineering Society of North America (IESNA)* Lighting Handbook, (Tenth edition).

9.9.6 Recommended Room/Space Criteria

Room/Space	**Illuminance Target Levels**
Administration/Circulation	

Open Office:	30 fc average at 30” A.F.F.
Enclosed Office (private):	30 fc average at 30” A.F.F.
Corridor/Transition:	10 fc average at floor.
Lobby:	10 fc average at floor.
Elevator Lobbies:	10 fc average at floor.
Storage:	10-30 fc average at floor.
Dining:	10 fc average at floor.
Stairs (Active):	10 fc average at floor.
Restrooms:	10 fc average at floor.
Conference/Meeting/Multi-purpose Room:	10-30 fc average at 30” A.F.F. (dimming)
Video-TeleConference (VTC) Room:	10-50 fc average at 30” A.F.F. (horizontal/dimming). 30 Fc average (vertical/dimming)
Data Center/Stacks:	50 fc average at vertical plane.
Copy Room:	10 fc average at floor.
Pantry:	30 fc average at 36” A.F.F.
Mail Room:	50 fc average at 36” A.F.F.

Electrical Room:	50 fc average maintained at floor.
Mechanical Room:	50 fc average maintained at floor.
Janitor Closet:	10 fc average maintained at floor.
Loading Dock:	10 fc average at grade.
Security:	30 fc average at work plane 30" A.F.F. (dimming)

9.10 Vending Machine Control

Occupancy sensor based vending machine control system (Vendmiser or equal) is required for each vending machine location in the building. Machines which store perishable items shall not be so controlled.

Vending machine shall be power down when surrounding area is unoccupied and re-energized when occupants are sensed.

The surrounding ambient temperature shall be monitored in order to maintain internal temperature of vending machine products. When a high temperature point is reach, vending machine shall be re-energized.

Vending machines shall not be powered down while compressor is operating.

The least amount of vending machine control devices should be used. Banks of machine should be controlled simultaneously.

9.11 Electrical Scope

9.11.1 System Upgrades

Below is an overview of the scope of work.

1) Support of HVAC (See Section 5, HVAC of BOD) energy upgrades. This will include new circuit and electrical equipment as necessary to complete the HVAC

installations.

a) In the case of replacement motors, verify that the size of the existing disconnect switch it adequate. If not, resize and replace the disconnect switch as necessary. Also, if the disconnect switch is old and no longer operating properly, it must be replaced with a similar make and model if possible.

b) Verify existing electrical panels have adequate capacity to support new HVAC equipment. Provide new feeders and panels as required at no additional cost.

2) ECM 1.02: Lighting Replacements

i) The majority of lamping within the McCormack building has been updated with higher efficiency lamping. During design build team walkthroughs, if any additional inefficiency lamping is noticed it should be replaced as follows at no additional cost:

(1) Existing T8 technology should be maintained and left as is.

(2) Replace any T12 lamping and magnetic ballast with higher efficiency T8 lamping and electronic ballasts.

(3) Replace incandescent fixtures with CFL/LED technology to match the remainder of the building and increase energy efficiency.

(4) Equipment recommended for replacement must first be approved by owner.

ii) The original design of the McCormack building utilizes recessed troffers that also function as diffusers. Any such fixtures that are replaced must be accompanied by a diffuser installation nearby the original location in order to maintain the HVAC design.

iii) See below for approximate counts of lamping to be upgraded and fixtures to be replaced. Final count to be determined by Design Build Team and any additional fixtures or lamping identified shall be replaced at no additional cost.

Line Item	Floor	Room Name	Existing Lamp Type	No. of Fix.
01	Plaza	State Police	75W/INC	2
02	Plaza	Sec. of Commerce	MR16	7
03	01	Mass. Comm. For the Blind	1F34T12	1
04	02	Center Hallway 2	1F30T12	2
05	02	Human Resources	70W/MH	32
06	15	Open Area	MR16	20
07	20	Elevator Lobby	1F40T12	1
08	21	Elevator Lobby	1F30T12	1
09	21	Conference Room	65W/INC	6
10	22	-	2F96T12	2

3) ECM 2.01: Lighting Controls

i) Replace existing electronic/magnetic ballasts with dimmable, wireless (or similar) and addressable ballasts.

ii) Retrofit areas with local wireless (or similar) controllers.

iii) Retrofit areas with automated controls (occupancy sensors and daylight harvesting) to reduce energy usage in unoccupied spaces as well as incorporate natural light into the design.

iv) See matrix below for approximate counts of dimmable ballasts, occupancy sensors, daylight harvesting sensors (photocells) and local controllers:

(1) The McCormack building operates on an 8AM to 6:30PM schedule, 5 days a week. The building is manned 24 hrs/day and is currently

equipped with zonal lighting control via the building automation system at the control station.

(2) Mechanical floors (7, 22 and in the Garage level) were not included. These floors operate 24/7.

(3) Floor/office configurations for levels 1-6, 8-18, 21 were based off of the RDK Engineers Fire Alarm drawings created 11/2005. The configurations for floors 19-20 were based off of the Bargmann Hendrie drawings dated 11/2004. All floors were also analyzed along with site investigations and onsite staff interviews.

(4) Final counts of lighting control equipment to be determined by design build team.

	Approx. # of Occ. Sensors	Approx. # of Daylight Sensors	Approx. # of Dimmable Ballasts	Approx. # of Local Controllers
Plaza	55	0	413	31
Level 1	28	17	146	17
Level 2	40	25	193	28
Level 3	69	37	456	46
Level 4	68	36	450	43
Level 5	83	50	455	56
Level 6	98	49	448	69
Level 8	68	33	439	41
Level 9	59	25	415	32
Level 10	72	40	473	47
Level 11	96	46	429	68
Level 12	99	42	427	69
Level 13	94	44	424	63
Level 14	97	39	427	57
Level 15	87	43	480	48
Level 16	75	52	455	39
Level 17	86	42	432	42
Level 18	49	48	392	57
Level 19	54	51	321	73
Level 20	58	44	386	68
Level 21	59	32	203	56
Total	1494	795	8264	1050

4) ECM 11.01: Vending Machine Power Reduction

i) Design build team to remove vending machines advertising lamping or replace illuminating lamping with more efficient T8 lamping and install vending machine control devices to de-energize machines when surrounding area is unoccupied also to monitor surrounding temperature.

ii) Design build team to contact vending machine owners to determine

lighting replacement options during design process. Lighting replacements shall be provided at no additional cost.

iii) There are six (6) vending machines in the McCormack Building, three (3) of which hold perishable items and should not have the vending machine controls installed:

(1) Any vending machine used to contain perishable food items should not be equipped with the control technology.

9.11.2 System Description

9.11.2.a ECM 1.02: Lighting Replacements

1) Demolition Work

a) Remove existing T12 and incandescent lamping as required.

b) Remove existing magnetic ballast as required.

2) New Construction Work

a) Install new electronic ballast as required.

b) Install new T8 and CFL/LEF lamping as required.

c) See Section 9.11.1 for additional information including counts and locations.

9.11.2.b ECM 2.01: Lighting Controls

1) Demolition Work

a) Remove existing electronic ballast/magnetic ballast as required, see matrix in Attachment X for additional information.

2) New Construction Work

a) Provide quantity of motion sensors/photocells required for complete and proper volumetric coverage without gaps within range of coverage(s) of controlled areas. Rooms shall have 100 percent volumetric coverage to completely cover controlled area to accommodate occupancy habits of single or multiple occupants at any location within room(s).

b) Installation shall conform to manufacturer's written installation recommendations.

c) Locate motion sensors minimum of four feet away from supply and return air registers.

d) Mount sensors so they will not receive light directly from a light source or reflecting surface.

e) See Section 9.11.1 for additional information including counts and locations.

f) Install dimmable ballasts and local controllers per manufacturer’s instructions.

3) Post Construction

a) Test functionality of all installed devices.

b) Test functionality of light control system and confirm integration with all components.

9.11.2.c ECM 11.01: Vending Machine Power Reduction

1) Demolition Work

a) None

2) New Construction Work

a) If possible, remove existing lamping or install new, more efficient T8 lamping in vending machine.

b) Install vending machine control equipment.

c) See Section 9.11.1 for additional information including counts and locations.

10 Commissioning

10.1 Overview

This Project is a performance-based contract and energy and water savings are required. DCAM & BSB will assign a commissioning agent for this project. This commissioning agent will work directly for DCAM & BSB. The direct cost of the commissioning agent will be the responsibility of DCAM & BSB. The Design Build team shall be responsible for assisting the commissioning agent during the design, construction, testing and commissioning phases of this project.

Refer to specification section 01810 for additional information.

10.2 Commissioning Plan

The initial Commissioning Plan will be provided by the commissioning agent. And will include the Functional Testing Outline provided below. This Initial Plan will provide details on issues such as scheduling, participation of various parties in this particular Project, actual lines of reporting and approvals, and coordination of efforts, and will be incorporated into Schedule G of the ESA (Attachment E, Part I). Commissioning is expected to insure the following:

- That all contractual obligations of the Contractor are met.
- That the Project is completed and operated in compliance with the conditions of state and local permits.
- That design and operation of the new systems minimized any potential impact to other mechanicals.
- Systems operation and levels of quality are verified and documented during construction, start-up, and commissioning.
- Systems are operational by substantial completion.
- That a 100% acceptance rate is achieved on start-up and commissioning, performance and emissions tests.

10.3 Minimum Activities

Commissioning of systems shall be in accordance with the manufacturer's instructions and specifications. It is expected that Commissioning activities will include the

following at a minimum:

- Verification and documentation demonstrating that all requirements have been attained.
- Inspection and testing of all electrical connections and signal wires to ensure proper communication within the equipment's control system.
- Energize and verify that all systems function normally without faults.
- Check assembly tolerances and alignments.
- Ensure all computer based systems are operating with the most current software versions available from the manufacturer.
- Ensure proper functionality of all equipment subsystems.
- Test all safety sensors to ensure proper activation including emergency stop.
- Energize equipment and ensure all systems report Status OK.
- Place equipment in run mode, verify sustained operation without faults.
- Monitor operation after ECMs through metering (flow measurement, electrical input at large equipment) to confirm equipment is operating at scheduled performance levels.

10.4 Final Commissioning and Start-up

The Final Commissioning and Start-up Plan will be developed for each of the applicable ECMs. This plan will provide pre-functional and functional testing, acceptance requirements, training, M&V methods, and ongoing commissioning. It will include the following elements:

- Field Design Verification
- Operational Acceptance Test

- Pre-Functional Acceptance Test
- Equipment Start-up
- Functional Acceptance Test
- Verification of Pump kW
- Thermal Output
- Gas Input
- Final Commissioning Report will be submitted with the Final Project Notice. This report will consolidate the collected Project Commissioning Documentation, plus the equipment installation approvals.

10.5 Systems to Commission

All systems associated with the EMC's shall be commissioned. These systems include (but not necessarily limited to):

- ECM-1.02 – Lighting Replacements
- ECM-2.01 – Lighting Controls
- ECM-3.01 – Replace Garage Exhaust Fan Motors
- ECM-4.01 – Energy Dashboard
- ECM-4.10, ECM 4.13, ECM-4.13, ECM-5.03 – BAS controls upgrades
- ECM-5.03 – Recover Cooling Coil Condensate
- ECM-5.06 – Plumbing fixtures upgrades
- ECM-9.01 – Chilled Water Distribution Improvements
- ECM-10.00 – Insulate Pumps & Domestic Water Heaters

- ECM-11.02 – Vending Machine Power Reduction
- ECM-15.02 – Condenser Water Reheat
- ECM-16.2 – New Inner Window
- ECM-17.00 – Reduce Duct Leakage
- ECM-17.02 - Replace Air Handling Units and Return Fans
- ECM-17.03 – Replace Constant Volume Systems with Variable Flow
- ECM-17.09 – Reactivate AHU economizers
- ECM-17.10 – Demand Control Ventilation
- ECM-23.00 – Replace existing Pumps

11 Training and Maintenance

11.1 Training and Maintenance

Provide a Training / Maintenance program that will include the following:

- Provide adequate maintenance training
- Educate management on the importance of training and maintenance (increased efficiency, reduced costs etc.)
- Create an effective method of reporting problems (potentially by automated systems and/or routine inspection)
- Optimize preventative maintenance efforts

Effective T & M programs might include some of following:

Implementation of Maintenance Management System (MMS): Ideally system shall provide capability for inputs from sensors (differential pressure across filters, temperature, vibration etc.). MMS shall summarize and analyze data, produce performance records on equipment, store equipment specifications, warranty and service contract information, prioritize and generate maintenance orders, schedule preventative maintenance automatically based on maintenance plans and/or meter readings.

Routine Maintenance / Potential Areas to Provide Maintenance Staff Training –

- Routine inspections to check for steam and compressed air leaks.
- Routine boiler inspection to determine severity of scaling.
- Vibration analysis to locate faulty bearings, gears, machine mounts etc.

All training sessions shall be professionally videotaped.

12 Asbestos

Refer to Appendix C for the Asbestos Operations and Maintenance Program Manual

13 General Requirements

SECTION 011000

SUMMARY

PART 1 - GENERAL

1.1 GENERAL PROVISIONS

A. ATTENTION IS DIRECTED TO THE CONTRACT AND GENERAL CONDITIONS AND ALL SECTIONS WITHIN DIVISION 01 - GENERAL REQUIREMENTS WHICH ARE HEREBY MADE A PART OF THIS SECTION OF THE SPECIFICATIONS.

B. EQUALITY OF MATERIAL, ARTICLE, ASSEMBLY OR SYSTEM OTHER THAN THOSE NAMED OR DESCRIBED IN THIS SECTION SHALL BE DETERMINED IN ACCORDANCE WITH THE PROVISIONS OF ARTICLE V OF THE CONTRACT AND GENERAL CONDITIONS.

1.2 REQUIREMENTS INCLUDED

A. WORK UNDER THIS CONTRACT.

B. EXAMINATION OF SITE AND DOCUMENTS.

C. CONTRACTOR QUALIFICATIONS.

D. CONTRACT METHOD.

E. WORK SEQUENCE.

F. SUPERVISION OF WORK.

G. CONSTRUCTION MANAGER USE OF PREMISES.

H. COORDINATION.

I. FIELD ENGINEERING.

J. REFERENCE STANDARDS.

K. PRECONSTRUCTION CONFERENCE.

L. PROJECT MEETINGS.

M. PERMITS, INSPECTION, AND TESTING REQUIRED BY GOVERNING AUTHORITIES.

N. CUTTING, CORING, PATCHING, UNLESS OTHERWISE INDICATED.

O. DEBRIS REMOVAL.

P. FIELD MEASUREMENTS.

Q. SAFETY REGULATIONS.

R. OSHA SAFETY AND HEALTH COURSE DOCUMENTATION.

S. DAMAGE RESPONSIBILITY.

T. OWNER FURNISHED PRODUCTS.

U. USER AGENCY OCCUPANCY.

V. ASBESTOS AND HAZARDOUS MATERIALS DISCOVERY.

W. SPECIAL REQUIREMENTS.

X. LIST OF DRAWINGS.

1.3 WORK UNDER THIS CONTRACT

A. THE WORK TO BE DONE UNDER THIS CONTRACT CONSISTS OF EXECUTING AND COMPLETING ALL WORK REQUIRED FOR MASSACHUSETTS STATE PROJECT DCP1021 ES1.

1. GENERAL INFORMATION

a. THIS DOCUMENT DESCRIBES THE ENERGY UPGRADES ASSOCIATED WITH THE MASSACHUSETTS STATE HOUSE, JOHN W. McCORMACK, AND ERICH LINDEMANN BUILDINGS.

b. THE WORK INCLUDES INSTALLATION OF NEW AIR HANDLING UNITS, INSTALLATION OF EQUIPMENT REQUIRED FOR CONDENSER WATER HEAT RECOVERY, INSTALLATION OF EQUIPMENT REQUIRED FOR COOLING COIL CONDENSATE RECOVERY, INSTALLATION OF COGGED BELTS AND PULLEYS FOR FAN MOTORS, INSTALLATION OF NEW PUMPS, INSTALLATION OF INSULATION FOR PUMPS AND DOMESTIC WATER HEATERS, INSTALLATION OF NEW PREMIUM EFFICIENCY MOTORS, INSTALLATION OF NEW VARIABLE FREQUENCY DRIVES AND CONTROLS, INSTALLATION OF NEW VAV BOXES, INSTALLATION OF 2-WAY CONTROL VALVES AND CONTROLS, SEALING DUCTWORK IN MECHANICAL ROOMS, PROVIDING NEW CO2 SENSORS AND DEMAND CONTROL VENTILATION CONTROLS, REPLACING PNEUMATIC CONTROLS, ACTUATION, AND DAMPERS FOR ALL AIR HANDLING UNITS WITH NEW DDC CONTROLS, ELECTRIC ACTUATION, AND NEW DAMPERS, INSTALLATION OF NEW FANS, INSTALLATION OF MONITORS AND MONITORING EQUIPMENT FOR ENERGY DASHBOARDS, INSTALLATION OF NEW OCCUPANCY SENSORS, PHOTOCELLS AND CONTROLS, INSTALLATION OF NEW BALLASTS AND LAMPING, INSTALLATION OF NEW EXTERIOR LIGHTING, INSTALLATION OF VENDMISERS, INSTALLATION OF NEW PLUMBING FIXTURES FLUSH VALVES, INSTALLATION OF SECOND INTERIOR WINDOWS, INSTALLATION OF REQUIRED, PROVIDING NEW PIPING INSULATION, PROVIDING NEW DDC CONTROLS FOR NEW EQUIPMENT, AND REMOVAL OF PNEUMATIC CONTROLS AND ACTUATORS AND PROVIDING NEW DDC CONTROLS AND ELECTRIC ACTUATORS. REFER TO EARLIER SECTIONS OF THE BASIS OF DESIGN NARRATIVE FOR ADDITIONAL INFORMATION.

B. THE WORK WILL INCLUDE ALL OPERATIONS NECESSARY TO DELIVER THE BUILDING(S) AND ANCILLARY ON AND OFF SITE AMENITIES IN A FULLY INSTALLED AND OPERABLE CONDITION INCLUDING ALL UTILITY AND SITE WORK AND OBTAINING ALL NECESSARY LICENSES, PERMITS, AND CERTIFICATES. WHERE UTILITIES EXIST WITHIN AND ADJACENT TO THE BUILDING(S) AND ANCILLARY PARKING LOTS, AND ARE KNOWN BY THE OWNER, THEY HAVE BEEN SHOWN ON THE SITE PLAN(S) APPEARING IN, BUT NOT RESTRICTED TO, THE EXHIBITS. CONNECTIONS TO THESE EXISTING UTILITY LINES WILL BE THE RESPONSIBILITY OF THE CONTRACTOR.

C. THE SCOPE OF WORK, WITHOUT LIMITING THE GENERALITY THEREOF, INCLUDES ALL LABOR, MATERIALS, EQUIPMENT AND SERVICES REQUIRED TO PERFORM THE WORK DESCRIBED FULLY IN THE DRAWINGS AND SPECIFICATIONS AND INCLUDES, BUT IS NOT LIMITED TO THE FOLLOWING MAJOR WORK:

1. CONSTRUCTION OF BOILER ROOMS AND SYSTEMS ARE INCLUDING, BUT NOT LIMITED TO:
   A. ROOFING.
   B. DOORS AND WINDOWS.
   C. INTERIOR FINISHES.
   D. MECHANICAL AND ELECTRICAL.
   E. SITEWORK AND UTILITIES WORK.
   F. CONTROLS

D. REFERENCE TO DRAWINGS: THE WORK TO BE DONE UNDER THIS CONTRACT IS SHOWN ON THE DRAWINGS LISTED AT THE END OF THIS SECTION.

E. WORK WILL INCLUDE ALL SITE REMOVAL AND NEW CONSTRUCTION FOR THIS ENERGY

UPGRADES PROJECT INCLUDING UNDERGROUND AND OVERHEAD UTILITIES, HVAC WORK, PLUMBING WORK, FIRE PROTECTION, AND ELECTRICAL WORK AS REQUIRED. THE CONTRACTOR WILL PROVIDE A SCHEDULE FOR COMPLETION OF THE PROJECT TO THE OWNER WITHIN A PRE-DETERMINED CONSTRUCTION PERIOD.

F. THE MASSACHUSETTS STANDARD LABOR WAGE RATES, AS OUTLINED IN THE EXHIBITS, WILL BE USED IN THE CONSTRUCTION OF THIS PROJECT.

1.4 EXAMINATION OF SITE AND DOCUMENTS

A. A PRE-BID CONFERENCE WILL BE HELD AT THE JOB SITE ON THE DATE AND AT THE TIME INDICATED IN THE INVITATION TO BID.

B. BIDDERS SHALL VISIT THE SITE ON A NON-HOLIDAY WEEK DAY ACCEPTABLE TO THE USER AGENCY AND THE DCAM PROJECT MANAGER, BETWEEN THE HOURS OF 9:00 AM AND 3:00 PM TO VISUALLY INSPECT THE LOCATION OF THE WORK AND EXISTING CONDITIONS THAT MAY AFFECT NEW WORK.

C. THE BIDDERS ARE EXPECTED TO EXAMINE AND TO BE THOROUGHLY FAMILIAR WITH ALL CONTRACT DOCUMENTS AND WITH THE CONDITIONS UNDER WHICH THE WORK IS TO BE CARRIED OUT. THE COMMONWEALTH WILL NOT BE RESPONSIBLE FOR ERRORS, OMISSIONS, AND/OR CHARGES FOR EXTRA WORK ARISING FROM THE GENERAL CONTRACTORS OR SUBCONTRACTORS FAILURE TO FAMILIARIZE THEMSELVES WITH THE CONTRACT DOCUMENTS, THAT HE IS FAMILIAR WITH THE CONDITIONS AND REQUIREMENTS OF BOTH WHERE THEY REQUIRE, IN ANY PART OF THE WORK A GIVEN RESULT TO BE PRODUCED, THAT THE CONTRACT DOCUMENTS ARE ADEQUATE AND HE WILL PRODUCE THE REQUIRED RESULTS.

D. CONTACT:

KRISTA LILLIS
PROJECT MANAGER
DIVISION OF CAPITAL ASSET MANAGEMENT
ONE ASHBURTON PLACE, ROOM 1500
BOSTON, MA 02108
617-727-4030 X428
Krista.Lillis@state.ma.us

1.5 GENERAL CONTRACTOR'S QUALIFICATION

A. THE GENERAL CONTRACTOR MUST BE CURRENTLY CERTIFIED BY THE DIVISION OF CAPITAL ASSET MANAGEMENT (DCAM) FOR GENERAL BUILDING CONSTRUCTION.

B. THE GENERAL CONTRACTOR SHALL CERTIFY IN WRITING THAT HE HAS SUCCESSFULLY PERFORMED ON AT LEAST THREE NEW CONSTRUCTION PROJECTS OF EQUIVALENT SIZE AND COMPLEXITY.

C. IT IS THE BIDDER'S RESPONSIBILITY TO OBTAIN THE NECESSARY FORMS FROM DCAM AND MAKE APPLICATION TO DCAM NOT LESS THAN THREE WEEKS PRIOR TO ADVERTISED BID OPENING FOR DCAM TO EVALUATE THE APPLICATION AND ISSUE A CERTIFICATE OF ELIGIBILITY.

D. THE CONTRACTOR'S UPDATED STATEMENT IS NOT A PUBLIC RECORD AS DEFINED IN M.G.L., CHAPTER 4, SECTION 7, AND WILL NOT BE OPEN TO PUBLIC INSPECTION.

1.6 CONTRACT METHOD

A. WORK UNDER THIS CONTRACT SHALL BE LUMP SUM PRICE, FOR THE SCOPES OF WORK AS DESCRIBED IN THESE SPECIFICATIONS, THE BASIS OF DESIGN NARRATIVE AND SHOWN ON THE DRAWINGS.

B. THIS PROJECT IS BEING PROCURED IN COMPLIANCE WITH MGL CHAPTER 25A. THE CONTRACTOR IS RESPONSIBLE FOR ALL FINAL DESIGN DOCUMENTS FOR THE PROJECT. THE DESIGN DOCUMENTS SHALL BE APPROVED BY DCAM. THE INSTALLATION OF THE EQUIPMENT SHALL NOT BEGIN WITHOUT THE WRITTEN APPROVAL FROM DCAM. THE TERM “CONTRACTOR”, “GENERAL CONTRACTOR” AND “CONSTRUCTION MANAGER” SHALL APPLY TO THE ENTIRE DESIGN BUILD TEAM, INCLUDING BUT NOT LIMITED TO THE CONTRACTOR, ARCHITECT AND ENGINEER.

1.7 SUPERVISION OF WORK

A. THE GENERAL CONTRACTOR SHALL BE HELD DIRECTLY RESPONSIBLE FOR THE CORRECT INSTALLATION OF ALL WORK PERFORMED UNDER THIS CONTRACT. THE GENERAL CONTRACTOR MUST MAKE GOOD REPAIR, WITHOUT EXPENSE TO THE COMMONWEALTH, OF ANY PART OF THE NEW WORK, OR EXISTING WORK TO REMAIN, WHICH MAY BECOME INOPERATIVE ON ACCOUNT OF LEAVING THE WORK UNPROTECTED OR UNSUPERVISED DURING CONSTRUCTION OF THE SYSTEM OR WHICH MAY BREAK OR GIVE OUT IN ANY MANNER BY REASON OF POOR WORKMANSHIP, DEFECTIVE MATERIALS OR ANY LACK OF SPACE TO ALLOW FOR EXPANSION AND CONTRACTION OF THE WORK DURING THE GENERAL CONTRACTOR'S WARRANTY PERIOD, FROM THE DATE OF FINAL ACCEPTANCE OF THE WORK BY THE DIVISION OF CAPITAL ASSET MANAGEMENT (DCAM).

B. THE GENERAL CONTRACTOR SHALL FURNISH A COMPETENT MASSACHUSETTS LICENSED SUPERINTENDENT SATISFACTORY TO THE DCAM PROJECT MANAGER AND TO THE DESIGNER. THE LICENSED SUPERINTENDENT SHALL SUPERVISE ALL WORK UNDER THIS CONTRACT AND WHO SHALL REMAIN ON DUTY AT THE SITE THROUGHOUT THE CONTRACT PERIOD WHILE WORK IS IN PROGRESS.

1. SUBMIT THE NAME AND RESUME OF THE SUPERINTENDENT FOR APPROVAL TO THE DCAM PROJECT MANAGER. INCLUDE EXPERIENCE WITH PROJECTS OF EQUAL SIZE AND COMPLEXITY.

1.8 GENERAL CONTRACTOR’S USE OF PREMISES

A. USE OF THE SITE: LIMIT USE OF THE PREMISES TO WORK IN AREAS INDICATED WITHIN THE CONSTRUCTION FENCE SHOWN ON THE SITE DRAWING(S). COORDINATE WORK OF ALL SUBCONTRACTORS REQUIRED OUTSIDE THE CONTRUCTION FENCE BOUNDARY SHOWN ON THE SITE DRAWING(S). CONFINE OPERATIONS TO AREAS WITHIN CONTRACT LIMITS INDICATED. DO NOT DISTURB PORTIONS OF THE SITE BEYOND AREAS WITHIN CONTRACT LIMITS INDICATED. DO NOT DISTURB PORTIONS OF THE SITE BEYOND THE AREAS IN WHICH THE WORK IS INDICATED.
1. OWNER OCCUPANCY: ALLOW FOR OWNER OCCUPANCY AND USE BY THE PUBLIC (IF APPLICABLE).
2. DRIVEWAYS AND ENTRANCES: KEEP DRIVEWAYS AND ENTRANCES SERVING THE PREMISES CLEAR AND AVAILABLE TO THE OWNER, THE OWNER’S EMPLOYEES, AND EMERGENCY VEHICLES AT ALL TIMES. DO NOT USE THESE AREAS FOR PARKING OR STORAGE OF MATERIALS. SCHEDULE DELIVERIES TO MINIMIZE SPACE AND TIME REQUIREMENTS FOR STORAGE OF MATERIALS AND EQUIPMENT ON-SITE.

B. SCHEDULE AND PERFORM WORK TO AFFORD MINIMUM OF INTERRUPTION TO NORMAL AND CONTINUOUS OPERATION OF UTILITY SYSTEMS. THE GENERAL CONTRACTOR SHALL SUBMIT TO DCAM AND THE DESIGNER FOR APPROVAL, PROPOSED SCHEDULE FOR PERFORMING WORK; INCLUDING CONSTRUCTION OF NEW UTILITIES, RE-ROUTING OF EXISTING UTILITIES AND FINAL CONNECTION OF NEW WORK TO EXISTING WORK. SCHEDULE SHALL INDICATE SHUTDOWN TIME REQUIRED FOR EACH OPERATION.

1. WORK INCLUDES CHECKING ALL SAFETY DEVICES TO VERIFY THAT THEY HAVE COME BACK ON-LINE AFTER INTERRUPTION. THIS REQUIREMENT WILL NOT BE WAIVED.

C. THE GENERAL CONTRACTOR SHALL NOTIFY THE DCAM AND OPERATING AGENCY IN WRITING, 72 HOURS IN ADVANCE OF THE PROPOSED TIME FOR SHUTTING DOWN OR INTERRUPTING ANY UTILITIES, SERVICES OR FACILITIES WHICH MAY AFFECT THE OPERATION OF OTHER BUILDINGS, SERVICES OR FACILITIES OF THE OPERATING AGENCY.

D. COORDINATE WITH DCAM AND THE DESIGNER, WORK IN CONNECTION WITH ADJACENT DRIVEWAYS, WALKS, OR OTHER FACILITIES WHICH WOULD PREVENT ACCESS THERETO OR INTERRUPT, RESTRICT, OR OTHERWISE INFRINGE UPON THE OPERATING AGENCY'S USE THEREOF.

E. THE GENERAL CONTRACTOR SHALL BE AWARE OF THE SENSITIVITY OF THE NEIGHBORHOOD ORGANIZATIONS TO NOISE, DUST, DEBRIS AND SITE MAINTENANCE AND TAKE APPROPRIATE PRECAUTIONS TO AVOID CONFLICT.

F. DAMAGE TO EXISTING WORK, IF CAUSED BY THE CONTRACTOR'S OPERATIONS UNDER THIS CONTRACT, SHALL BE REPAIRED AT THE GENERAL CONTRACTOR'S EXPENSE.
   1. AN EXISTING CONDITIONS SURVEY SHALL BE CONDUCTED, WITH THE DESIGNER, THE DCAM PROJECT MANAGER, AND USER AGENCY REPRESENTATIVES, AT WHICH EXISTING CONDITIONS WILL BE VIDEO-TAPED BY THE GENERAL CONTRACTOR. A COPY OF THE VIDEO-TAPE WILL BE PROVIDED TO THE DCAM PROJECT MANAGER.

G. TRENCHING AND OTHER WORK OUTSIDE CONSTRUCTION LIMITS SHALL BE EXPEDITED TO FULLEST EXTENT AND CARRIED OUT WITH MINIMUM OF INCONVENIENCE TO NORMAL OPERATION OF THE OPERATING AGENCY AND PUBLIC TRAFFIC. WALKS, PAVED OR LANDSCAPED AREAS OVER WHICH TEMPORARY DRIVEWAYS CROSS, SHALL UPON COMPLETION OF THE WORK, BE RESTORED TO THEIR ORIGINAL CONDITION. TEMPORARY ROADWAYS SHALL BE BRIDGED OVER TRENCHED AREAS. FILING IS REQUIRED FOR A DCAM ISSUED TRENCH PERMIT.

H. THE GENERAL CONTRACTOR CAN GAIN ACCESS TO THE PREMISES DURING THE HOURS SPECIFIED BELOW. IN ADDITION THE GENERAL CONTRACTOR AND HIS PERSONNEL WILL LIMIT THEMSELVES ONLY WITHIN THE WORKING PREMISES DURING WORKING HOURS. IF WORK NEEDS TO BE SCHEDULED DURING TIMES OTHER THAN THOSE LISTED BELOW, CONTRACTOR SHALL INFORM THE DCAM PROJECT MANAGER ONE WEEK PRIOR TO WORK.
   1. DELIVERIES: 6:30 AM TO 8:00 AM AND AFTER 1:00 PM.
   2. GENERAL ACCESS: 6:30 AM TO 10:00 PM.

I. CONFINE OPERATIONS AT THE SITE TO AREAS PERMITTED BY:

   1. LAWS
   2. ORDINANCES
   3. PERMITS
   4. CONTRACT DOCUMENTS
   5. OWNER'S REGULATIONS

J. IF REQUIRED BY USER AGENCY OR THE DCAM PROJECT MANAGER, WORKERS WILL BE REQUIRED TO WEAR IDENTIFYING NAME BADGES. IN SECURE AREAS, SUBMIT NAMES OF WORKERS FOR CLEARING BY THE DCAM PROJECT MANAGER.

K. GENERAL CONTRACTOR SHALL SUPERVISE THE USE OF THE SITE RELATED TO CONSTRUCTION AND BE RESPONSIBLE FOR CORRECTING ANY DAMAGE IDENTIFIED BY THE DCAM PROJECT MANAGER TO THE DCAM PROJECT MANAGER'S SATISFACTION.

   1. AN EXISTING CONDITIONS SURVEY SHALL BE CONDUCTED, WITH THE DESIGNER, THE DCAM PROJECT MANAGER, AND USER AGENCY REPRESENTATIVES, AT WHICH EXISTING CONDITIONS WILL BE VIDEO-TAPED BY THE GENERAL CONTRACTOR. A COPY OF THE VIDEO-TAPE WILL BE PROVIDED TO THE DCAM PROJECT MANAGER.

L. ALL AVAILABLE EXISTING UTILITIES ADJACENT TO THE CONSTRUCTION SITE WILL BE AVAILABLE FOR USE DURING CONSTRUCTION UNLESS INDICATED OTHERWISE. TEMPORARY CONNECTIONS TO THESE UTILITIES, ALL METERING, TRANSFORMERS, REMOVAL, USAGE, AND THEIR ASSOCIATED COSTS WILL BE THE RESPONSIBILITY OF THE APPROPRIATE SUBCONTRACTOR.

2. UTILITIES AVAILABLE FOR USE DURING CONTRUCTION: WATER, SEWER, TELEPHONES, GAS, AND ELECTRICITY (DESIGNER TO PROVIDE LIST AFTER VERIFYING AVAILABILITY WITH USER AGENCY).

M. THE GENERAL CONTRACTOR SHALL VERIFY THAT SUBCONTRACTORS HAVE VISITED THE SITE AND INCLUDED ALL COSTS ASSOCIATED WITH THE LOCATION OF THE PROJECT, AND ANY RESTRICTION OR LIMITATIONS THE LOCATION OF THE PROJECT MAY POSE.

N. THE SUBCONTRACTORS SHALL AT ALL TIMES CONDUCT THEIR OPERATIONS IN A COURTEOUS, PROFESSIONAL MANNER WHILE ON THE PROJECT OR IN THE VICINITY OF THE PROJECT. HARASSMENT, OFFENSIVE LANGUAGE OR BEHAVIOR WILL NOT BE PERMITTED ON THE SITE.

1.9 COORDINATION

A. THE GENERAL CONTRACTOR SHALL BE RESPONSIBLE FOR THE PROPER FITTING OF ALL THE WORK AND FOR THE COORDINATION OF THE OPERATIONS OF ALL SUBCONTRACTORS OR MATERIAL AND PERSONS ENGAGED UPON THE WORK. THE GENERAL CONTRACTOR SHALL DO, OR CAUSE HIS AGENTS TO DO, ALL CUTTING, FITTING, ADJUSTING, AND REPAIR NECESSARY IN ORDER TO MAKE THE SEVERAL PARTS OF THE WORK COME TOGETHER PROPERLY.

1. EXAMINE CONTRACT DOCUMENTS IN ADVANCE OF START OF CONSTRUCTION AND IDENTIFY IN WRITING QUESTIONS, IRREGULARITIES OR INTERFERENCE TO THE DCAM PROJECT MANAGER IN WRITING. FAILURE TO IDENTIFY AND ADDRESS SUCH ISSUES IN ADVANCE BECOMES THE SOLE RESPONSIBILITY OF THE CONTRACTOR. A CONFLICT THAT WOULD CAUSE THE REDUCTION OF THE NORMAL CEILING HEIGHT OF ANY OCCUPIED SPACE IS CONSIDERED TO BE AN INTERFERENCE.

B. EXECUTE THE WORK IN AN ORDERLY AND CAREFUL MANNER WITH DUE REGARD TO THE OCCUPANTS OF THE FACILITY, THE PUBLIC, THE EMPLOYEES, AND THE NORMAL FUNCTION OF THE FACILITY.

C. THE WORK SEQUENCE SHALL FOLLOW PLANNING AND SCHEDULE ESTABLISHED BY THE GENERAL CONTRACTOR AS APPROVED BY THE DESIGNER AND THE DCAM PROJECT MANAGER. THE WORK UPON THE SITE OF THE PROJECT SHALL COMMENCE PROMPTLY AND BE EXECUTED WITH FULL SIMULTANEOUS PROGRESS. WORK OPERATIONS WHICH REQUIRE THE INTERRUPTION OF UTILITIES, SERVICE, AND ACCESS SHALL BE SCHEDULED SO AS TO INVOLVE MINIMUM DISRUPTION AND INCONVENIENCE, AND TO BE EXPEDITED SO AS TO INSURE MINIMUM DURATION OF ANY PERIODS OF DISRUPTION OR INCONVENIENCE.

D. THE GENERAL CONTRACTOR SHALL REVIEW THE TOLERANCES ESTABLISHED IN THE SPECIFICATIONS FOR EACH TYPE OF WORK AND AS ESTABLISHED BY TRADE ORGANIZATIONS. THE GENERAL CONTRACTOR SHALL COORDINATE THE VARIOUS SUBCONTRACTORS AND RESOLVE ANY CONFLICTS THAT MAY EXIST BETWEEN SUBCONTRACTOR TOLERANCES WITHOUT ADDITIONAL COST TO DCAM. THE GENERAL CONTRACTOR SHALL PROVIDE ANY CHIPPING, LEVELING, SHORING OR SURVEYS TO ENSURE THAT THE VARIOUS MATERIALS ALIGN AS DETAILED BY THE DESIGNER AND AS NECESSARY FOR SMOOTH TRANSITIONS NOT NOTICEABLE IN THE FINISHED WORK.

1.10 FIELD ENGINEERING

A. PROVIDE FIELD ENGINEERING SERVICES; ESTABLISH GRADES, LINES, AND LEVELS, BY USE OF RECOGNIZED ENGINEERING SURVEY PRACTICES. ALL FIELD ENGINEERING SURVEYING SHALL BE PERFORMED BY A LICENSED LAND SURVEYOR REGISTERED IN THE COMMONWEALTH OF MASSACHUSETTS.

B. THE GENERAL CONTRACTOR SHALL SURVEY AND SUBMIT EXACT DIMENSIONAL LAYOUTS AS REQUIRED. ENGAGE AND PAY FOR THE SERVICES OF A MASSACHUSETTS REGISTERED SURVEYOR ACCEPTABLE TO THE DCAM PROJECT MANAGER TO LOCATE AND PROTECT CONTROL AND REFERENCE POINTS.

1.11 REFERENCE STANDARDS

A. FOR PRODUCTS SPECIFIED BY ASSOCIATION OR TRADE STANDARDS, COMPLY WITH REQUIREMENTS FOR THE STANDARD, EXCEPT WHERE MORE RIGID REQUIREMENTS ARE SPECIFIED OR ARE REQUIRED BY CODES. REFER TO SECTION 014200 - REFERENCES.

B. WHERE REFERENCE IS MADE IN THE CONTRACTUAL DOCUMENTS TO PUBLICATIONS AND STANDARDS ISSUED BY ASSOCIATIONS OR SOCIETIES, THE INTENT SHALL BE UNDERSTOOD TO SPECIFY THE CURRENT EDITION OF SUCH PUBLICATIONS OR STANDARDS (INCLUDING TENTATIVE REVISION) IN EFFECT ON THE DATE OF THE CONTRACT ADVERTISEMENT NOTWITHSTANDING ANY REFERENCE TO A PARTICULAR DATE.

1.12 PRE-CONSTRUCTION CONFERENCE

A. IN ACCORDANCE WITH ARTICLE V OF THE CONTRACT AND GENERAL CONDITIONS, A PRE-CONSTRUCTION CONFERENCE TO REVIEW THE WORK WILL BE CONDUCTED BY THE DCAM PROJECT MANAGER.

B. REPRESENTATIVES OF THE FOLLOWING SHALL BE REQUIRED TO ATTEND THIS CONFERENCE:

1. DCAM
2. DESIGNER
3. USER AGENCY
4. GENERAL CONTRACTOR
5. ALL SUBCONTRACTORS
6. APPLICABLE MUNICIPAL AGENCIES

C. THE GENERAL CONTRACTOR SHALL HAVE A RESPONSIBLE REPRESENTATIVE AT THE PRE-CONSTRUCTION CONFERENCE TO BE CALLED BY THE DCAM PROJECT MANAGER FOLLOWING THE AWARD OF THE CONTRACT, AS WELL AS REPRESENTATIVES OF FIELD OR OFFICE FORCES AND MAJOR SUBCONTRACTORS. ALL SUCH REPRESENTATIVES SHALL HAVE AUTHORITY TO ACT FOR THEIR RESPECTIVE FIRMS. THE PRE-CONSTRUCTION CONFERENCE IS TO BE HELD WITHIN FIVE DAYS OF NOTICE TO PROCEED, OR AS OTHERWISE DETERMINED BY DCAM.

1.13 PROJECT MEETINGS

A. PROJECT MEETINGS SHALL BE HELD ON A WEEKLY BASIS AND AS REQUIRED SUBJECT TO THE DISCRETION OF THE DCAM PROJECT MANAGER.

B. AS A PREREQUISITE FOR MONTHLY PAYMENTS, ORDERING SCHEDULES, SHOP DRAWING SUBMITTED SCHEDULES, AND COORDINATION MEETING SCHEDULES SHALL BE PREPARED AND MAINTAINED BY THE GENERAL CONTRACTOR AND SHALL BE REVISED AND UPDATED ON A MONTHLY BASIS, AND A COPY SHALL BE SUBMITTED TO THE DCAM PROJECT MANAGER AND DESIGNER.

C. IN ORDER TO EXPEDITE CONSTRUCTION PROGRESS ON THIS PROJECT, THE GENERAL CONTRACTOR SHALL ORDER ALL MATERIALS IMMEDIATELY AFTER THE APPROVAL OF SHOP DRAWINGS AND SHALL OBTAIN A FIXED DATE OF DELIVERY TO THE PROJECT SITE FOR ALL MATERIALS ORDERED WHICH SHALL NOT IMPEDE OR OTHERWISE INTERFERE WITH CONSTRUCTION PROGRESS. THE GENERAL CONTRACTOR SHALL PRESENT A LIST AND WRITTEN PROOF OF ALL MATERIALS AND EQUIPMENT ORDERED (THROUGH PURCHASE ORDERS). SUCH LIST SHALL BE PRESENTED AT THE MEETINGS AND SHALL BE CONTINUOUSLY UPDATED.

D. SCHEDULING SHALL BE DISCUSSED WITH ALL CONCERNED PARTIES, AND METHODS SHALL BE PRESENTED BY THE GENERAL CONTRACTOR WHICH SHALL REFLECT CONSTRUCTION COMPLETION NOT BEING DEFERRED OR FORESHORTENED. IDENTIFY CRITICAL LONG-LEAD ITEMS AND OTHER SPECIAL SCHEDULING REQUIREMENTS. THE PROJECT SCHEDULE IS TO INCLUDE TIME FOR SUBMISSION OF SHOP DRAWING SUBMITTALS, TIME FOR REVIEW, AND

ALLOWANCE FOR RESUBMITTAL AND REVIEW.

E. PROJECT MEETINGS SHALL BE CHAIRED BY THE DESIGNER.

F. MINUTES OF THE PROJECT MEETINGS SHALL BE PREPARED BY THE DESIGNER AND SHALL BE DISTRIBUTED TO ALL PRESENT. THE DESIGNER'S MEETING MINUTES SHALL BE THE ONLY OFFICIAL MEETING RECORD.

1.14 PERMITS, INSPECTION AND TESTING REQUIRED BY GOVERNING AUTHORITIES

A. IF THE CONTRACT DOCUMENTS, LAWS, ORDINANCES, RULES, REGULATIONS OR ORDERS OF ANY PUBLIC AUTHORITY HAVING ANY JURISDICTION REQUIRE ANY PORTION OF THE WORK TO BE INSPECTED, TESTED, OR APPROVED, THE GENERAL CONTRACTOR SHALL GIVE THE DESIGNER, THE DCAM PROJECT MANAGER OR HIS/HER DESIGNATED REPRESENTATIVE, AND SUCH AUTHORITY TIMELY NOTICE (5 BUSINESS DAYS MINIMUM) OF ITS READINESS SO THE DESIGNER MAY OBSERVE SUCH INSPECTING, TESTING, OR APPROVAL.

B. PRIOR TO THE START OF CONSTRUCTION, THE GENERAL CONTRACTOR SHALL COMPLETE APPLICATION TO THE APPLICABLE BUILDING CODE ENFORCEMENT AUTHORITY FOR A BUILDING PERMIT. SUCH PERMIT SHALL BE DISPLAYED IN A CONSPICUOUS LOCATION AT THE PROJECT SITE.

C. UNLESS OTHERWISE SPECIFIED UNDER THE SECTIONS OF THE SPECIFICATIONS, THE GENERAL CONTRACTOR SHALL PAY SUCH PROPER AND LEGAL FEES TO PUBLIC OFFICERS AND OTHERS AS MAY BE NECESSARY FOR THE DUE AND FAITHFUL PERFORMANCE OF THE WORK AND WHICH MAY ARISE INCIDENTAL TO THE FULFILLING OF THIS CONTRACT. AS SUCH, ALL FEES, CHARGES, AND ASSESSMENTS IN CONNECTION WITH THE ABOVE SHALL BE PAID BY THE GENERAL CONTRACTOR

D. THE GENERAL CONTRACTOR SHALL MAINTAIN AT THE SITE, FOR THE DURATION OF CONSTRUCTION OPERATIONS, AT LEAST ONE (1) UP-TO-DATE COPY OF ALL RELEVANT CODES AND STANDARDS LISTED IN THE CONTRACT DOCUMENTS OR DETERMINED TO BE APPLICABLE TO THE WORK. ONE (1) COPY OF SUCH CODES SHALL BE FOR THE EXCLUSIVE USE OF DCAM AND THE DESIGNER AND ITS CONSULTANTS, AND SHALL BE KEPT IN THE GENERAL CONTRACTOR'S SITE OFFICE.

E. THE GENERAL CONTRACTOR SHALL FURNISH AND INSTALL ALL INFORMATION REQUIRED BY THE BUILDING OFFICIAL AND SHALL SECURE THE GENERAL BUILDING PERMIT FOR THE WORK PROMPTLY ON AWARD OF THE CONTRACT. THE GENERAL CONTRACTOR SHALL CONFORM TO ALL CONDITIONS AND REQUIREMENTS OF THE PERMIT AND CODE ENFORCEMENT AUTHORITY. THE GENERAL CONTRACTOR SHALL PROVIDE NAMES AND LICENSE NUMBERS OF ITS RESPONSIBLE REPRESENTATIVES TO COMPLETE THE APPLICATION FOR PERMIT, AND SHALL RECEIVE THE PERMIT AND PROMPTLY DISTRIBUTE COPIES TO DCAM AND THE DESIGNER.

F. GENERAL CONTRACTOR AND SPECIALIZED SUBCONTRACTORS AS APPLICABLE SHALL IDENTIFY ALL PERMITS (OTHER THAN GENERAL BUILDING PERMIT) REQUIRED FROM AUTHORITIES HAVING JURISDICTION OVER THE PROJECT FOR THE CONSTRUCTION AND OCCUPANCY OF THE WORK. THE GENERAL CONTRACTOR SHALL PREPARE THE NECESSARY APPLICATIONS AND SUBMIT REQUIRED PLANS AND DOCUMENTS TO OBTAIN SUCH PERMITS IN A TIMELY MANNER, AND SHALL FURNISH THE REQUIRED INFORMATION TO THE BUILDING OFFICIAL AND OBTAIN THE REQUIRED PERMITS AS EARLY AS PRACTICABLE AFTER AWARD OF THE CONTRACT.

1. THE GENERAL CONTRACTOR SHALL DISPLAY ALL PERMIT CARDS AS REQUIRED BY THE AUTHORITIES, AND SHALL DELIVER LEGIBLE PHOTOCOPIES OF ALL PERMITS TO DCAM'S PROJECT MANAGER AND THE DESIGNER PROMPTLY UPON THEIR RECEIPT.
2. THE GENERAL CONTRACTOR SHALL ARRANGE FOR ALL INSPECTIONS, TESTING AND APPROVALS REQUIRED FOR ALL PERMITS, AND SHALL NOTIFY THE DESIGNER AND DCAM'S RESIDENT ENGINEER OF SUCH INSPECTIONS AT LEAST THREE (3) BUSINESS DAYS IN ADVANCE (LONGER IF SO REQUIRED IN THE VARIOUS SECTIONS OF THE SPECIFICATIONS), SO THEY MAY ARRANGE TO OBSERVE.

3. THE GENERAL CONTRACTOR SHALL COMPLY WITH ALL CONDITIONS AND PROVIDE ALL NOTICES REQUIRED BY ALL PERMITS.
4. THE GENERAL CONTRACTOR SHALL PERFORM AND/OR ARRANGE FOR AND PAY ALL TESTING AND INSPECTIONS REQUIRED BY THE GOVERNING CODES AND AUTHORITIES, OTHER THAN THOSE PROVIDED BY DCAM, AND SHALL NOTIFY THE DESIGNER AND DCAM'S RESIDENT ENGINEER OF SUCH INSPECTIONS AT LEAST THREE (3) BUSINESS DAYS IN ADVANCE OF ALL SUCH TESTING OR INSPECTION, SO THEY MAY ARRANGE TO OBSERVE.
5. WHERE INSPECTING AUTHORITIES REQUIRE CORRECTIVE WORK FOR CONFORMANCE WITH APPLICABLE CODES AND AUTHORITIES, THE GENERAL CONTRACTOR SHALL PROMPTLY COMPLY WITH SUCH REQUIREMENTS, EXCEPT IN CASES WHERE SUCH REQUIREMENTS CLEARLY EXCEED THE REQUIREMENTS OF THE CONTRACT DOCUMENTS, IN WHICH CASE THE GENERAL CONTRACTOR SHALL PROCEED IN ACCORDANCE WITH THE PROCEDURES FOR MODIFICATIONS OR CHANGES IN THE WORK ESTABLISHED IN THE CONTRACT DOCUMENTS, AS AMENDED.

1.15 CUTTING, CORING, AND PATCHING, UNLESS OTHERWISE INDICATED

A. THE GENERAL CONTRACTOR SHALL COORDINATE ALL CUTTING, CORING, FITTING AND PATCHING OF THE WORK THAT MAY BE REQUIRED TO MAKE ITS SEVERAL PARTS COME TOGETHER PROPERLY AND FIT IT TO RECEIVE OR BE RECEIVED BY WORK OF THE SUBCONTRACTORS SHOWN ON THE DRAWINGS AND SPECIFICATIONS. THE SUBCONTRACTOR SHALL PERFORM ALL CUTTING, CORING OR PATCHING.

B. THE GENERAL CONTRACTOR SHALL COORDINATE THAT THE WORK OF THE SUBCONTRACTOR IS NOT ENDANGERED BY ANY CUTTING, CORING, EXCAVATING, OR OTHERWISE ALTERING OF THE WORK AND SHALL NOT ALLOW THE CUTTING OR ALTERING THE WORK OF ANY SUBCONTRACTOR EXCEPT WITH THE WRITTEN CONSENT OF THE DESIGNER.

C. SUBMIT A WRITTEN REQUEST TO DESIGNER WELL IN ADVANCE OF EXECUTING ANY CUTTING OR ALTERATION WHICH AFFECTS:

1. WORK OF DCAM OR SEPARATE CONTRACTOR.
2. STRUCTURAL VALUE OR INTEGRITY OF ANY ELEMENT OF THE PROJECT.
3. INTEGRITY OR EFFECTIVENESS OF WEATHER-EXPOSED OR MOISTURE-RESISTANT ELEMENTS OR SYSTEMS.
4. EFFICIENCY, OPERATIONAL LIFE, MAINTENANCE, OR SAFETY OF OPERATIONAL ELEMENTS.
5. VISUAL QUALITIES OF SIGHT-EXPOSED ELEMENTS.
6. REQUEST SHALL INCLUDE:
   a. IDENTIFICATION OF THE PROJECT.
   b. DESCRIPTION OF AFFECTED WORK.
   c. THE NECESSITY FOR CUTTING, ALTERATION, OR EXCAVATION.
   d. EFFECT ON WORK OF DCAM OR ANY SEPARATE GENERAL CONTRACTOR, OR ON STRUCTURAL OR WEATHERPROOF INTEGRITY OF PROJECT.
   e. DESCRIPTION OF PROPOSED WORK:
   f. ALTERNATIVES TO CUTTING AND PATCHING.
   g. COST PROPOSAL, WHEN APPLICABLE.
   h. WRITTEN PERMISSION OF ANY SEPARATE GENERAL CONTRACTOR WHOSE WORK WILL BE AFFECTED.
7. SHOULD CONDITIONS OF WORK OR THE SCHEDULE INDICATE A CHANGE OF PRODUCTS FROM ORIGINAL INSTALLATION, GENERAL CONTRACTOR SHALL SUBMIT REQUEST FOR SUBSTITUTION.
8. SUBMIT WRITTEN NOTICE TO DESIGNER DESIGNATING DATE AND TIME THE WORK WILL BE UNCOVERED A MINIMUM OF THREE BUSINESS DAYS IN ADVANCE.

D. PERFORMANCE:

1. EXECUTE CUTTING AND PATCHING BY METHODS WHICH WILL PREVENT DAMAGE TO OTHER WORK, AND WILL PROVIDE PROPER SURFACES TO RECEIVE INSTALLATION OF REPAIRS.

a. IN GENERAL, WHERE MECHANICAL CUTTING IS REQUIRED, CUT WORK WITH SAWING AND GRINDING TOOLS, NOT WITH HAMMERING AND CHOPPING TOOLS. CORE DRILL OPENINGS THROUGH CONCRETE WORK.
b. COMPLY WITH THE REQUIREMENTS OF SECTION 312000 - EARTH MOVING WHERE CUTTING-AND-PATCHING REQUIRES EXCAVATING AND BACKFILLING.
c. PRIOR TO CUTTING AND STRUCTURAL STEEL OR CONCRETE WORK, CONTACT DESIGNER AND PROJECT STRUCTURAL ENGINEER IN WRITING. DO NOT CUT ANY STRUCTURAL STEEL AND CONCRETE WORK UNTIL APPROVAL HAS BEEN GRANTED BY THE DESIGNER AND THE PROJECT STRUCTURAL ENGINEER.

2. EMPLOY ORIGINAL INSTALLER OR FABRICATOR TO PERFORM CUTTING AND PATCHING FOR:
a. WEATHER-EXPOSED OR MOISTURE-RESISTANT ELEMENTS.
b. SIGHT-EXPOSED FINISHED SURFACES.
3. EXECUTE FITTING AND ADJUSTMENT OF PRODUCTS TO PROVIDE A FINISHED INSTALLATION TO COMPLY WITH SPECIFIED PRODUCTS, FUNCTIONS, TOLERANCES, AND FINISHES.
4. RESTORE WORK WHICH HAS BEEN CUT OR REMOVED; INSTALL NEW PRODUCTS MATCHING EXISTING TO PROVIDE COMPLETED WORK IN ACCORDANCE WITH REQUIREMENTS OF CONTRACT DOCUMENTS.
5. FIT WORK AIRTIGHT TO PIPES, SLEEVES, DUCTS, CONDUIT, AND OTHER PENETRATIONS THROUGH SURFACES.
6. PATCH WITH SEAMS WHICH ARE DURABLE AND AS INVISIBLE AS POSSIBLE. FLASH AND SEAL ALL PENETRATION OF EXTERIOR WORK. COMPLY WITH SPECIFIED TOLERANCES FOR THE WORK.
7. RESTORE EXPOSED FINISHES OF PATCHED AREAS; AND, WHERE NECESSARY EXTEND FINISH RESTORATION ONTO RETAINED WORK ADJOINING, IN A MANNER WHICH WILL ELIMINATE EVIDENCE OF PATCHING.
a. WHERE PATCH OCCURS IN A SMOOTH PAINTED SURFACE, EXTEND FINAL PAINT COAT OVER THE ENTIRE UNBROKEN SURFACE CONTAINING THE PATCH.
8. REFINISH ENTIRE SURFACES AS NECESSARY TO PROVIDE AN EVEN FINISH TO MATCH ADJACENT FINISHES:
a. FOR CONTINUOUS SURFACES, REFINISH TO NEAREST INTERSECTION.
b. FOR AN ASSEMBLY, REFINISH ENTIRE UNIT.

E. EXISTING UTILITIES SERVICES:

1. INTERRUPTIONS TO CRITICAL EXISTING UTILITY SERVICES WILL NOT BE ALLOWED.
a. SANITARY SEWER, STORM DRAINAGE, AND WATER CHANGEOVERS AS AFFECTING EXISTING SERVICES SHALL BE DONE WITH NO DISRUPTIONS OF EXISTING SERVICES AND SCHEDULING OF SUCH WORK WILL REQUIRE APPROVAL IN WRITING BY THE USER AGENCY.
b. ALL RELOCATION OF EXISTING ELECTRICAL, TELEPHONE, AND GAS SERVICES THAT ARE UTILITY COMPANY OWNED SHALL BE PERFORMED BY THE RESPECTIVE UTILITY COMPANY, AND THE COST OF ANY CHARGES FOR SUCH WORK SHALL BE PAID BY THE GENERAL CONTRACTOR. ALL UTILITY INSTALLATIONS AND RELOCATION SHALL BE THE RESPONSIBILITY OF THE GENERAL CONTRACTOR. COORDINATION OF ALL OF THE AFORESAID WORK IS THE RESPONSIBILITY OF THE GENERAL CONTRACTOR.
2. THE GENERAL CONTRACTOR SHALL LOCATE AND RECORD ON DRAWINGS ALL EXISTING UTILITIES ALONG THE COURSE OF THE WORK BY SUCH MEANS AS THE DESIGNER AND THE DCAM PROJECT MANAGER MAY APPROVE, AND SHALL PRESERVE SUCH MARKED LOCATIONS UNTIL THE WORK HAS PROGRESSED TO THE POINT WHERE THE ENCOUNTERED UTILITY IS FULLY EXPOSED AND PROTECTED AS REQUIRED. IT SHALL BE THE GENERAL CONTRACTOR'S RESPONSIBILITY TO NOTIFY THE PROPER AUTHORITIES AND/OR UTILITY COMPANY BEFORE INTERFERING THEREWITH.
3. EXISTING UTILITIES THAT ARE INDICATED ON THE DRAWINGS OR WHOSE LOCATIONS ARE MADE KNOWN TO THE GENERAL CONTRACTOR PRIOR TO EXCAVATIONS, THOUGH ACCURACY AND INFORMATION AS TO GRADES AND ELEVATIONS MAY BE LACKING, SHALL BE PROTECTED FROM DAMAGE DURING THE EXCAVATION AND BACKFILLING OPERATIONS AND, IF DAMAGED BY THE GENERAL CONTRACTOR, IT SHALL BE REPAIRED BY THE GENERAL CONTRACTOR AT HIS/HER OWN EXPENSE.
4. ALL EXPOSED CONDUITS, WIRES, AND/OR CABLES SHALL BE PROVIDED WITH SUFFICIENT PROTECTION AND SUPPORT TO PREVENT FAILURE, FRAYING, OR DAMAGE DUE TO BACKFILLING OR OTHER CONSTRUCTION OPERATIONS.

5. THE GENERAL CONTRACTOR SHALL NOT OBSTRUCT ACCESS TO EXISTING ACTIVE UTILITY SYSTEM MANHOLES AND CATCH BASINS WHICH CONTINUE TO SERVE FACILITIES OTHER THAN THE PROJECT CONSTRUCTION SITE. THE GENERAL CONTRACTOR SHALL EXERCISE MEASURES AS NECESSARY TO PREVENT THE PLACEMENT OF IMPEDIMENTS THAT LIMIT CONTINUOUS ACCESS BY AUTHORIZED UTILITY COMPANY OR USER AGENCY MAINTENANCE PERSONNEL AND SHALL BE REQUIRED TO REIMBURSE THE UTILITY COMPANY OR USER AGENCY FOR ANY EXPENSE INCURRED AS A RESULT OF NEED TO REMOVE ANY SUCH IMPEDIMENTS TO ACCESS.

F. DIG-SAFE:

1. WITHIN THE COMMONWEALTH, “DIG-SAFE” (DIG SAFE SYSTEMS, INC.) IS THE NAME OF THE UTILITY UNDERGROUND PLANT DAMAGE PREVENTION AUTHORITY. THEY ARE LOCATED AT 331 MONTVALE AVENUE; WOBURN, MA 01801. THE TELEPHONE NUMBER IS 1-888-DIGSAFE (344-7233). GENERAL CONTRACTORS MUST NOTIFY “DIG-SAFE” OF CONTEMPLATED EXCAVATION, DEMOLITION, OR EXPLOSIVE WORK IN PUBLIC OR PRIVATE WAYS, AND ANY UTILITY COMPANY RIGHT-OF-WAY EASEMENT. NOTIFICATION MUST BE MADE AT LEAST SEVENTY-TWO (72) HOURS PRIOR TO THE WORK, BUT NOT MORE THAN SIXTY (60) DAYS BEFORE THE CONTEMPLATED WORK.
2. THE OWNER REQUIRES THAT NOTIFICATION BE SENT TO “DIG-SAFE” BY CERTIFIED MAIL WITH COPIES TO THE DESIGNER AND THE DCAM PROJECT MANAGER. THE OWNER REQUIRES A COPY OF THE SIGNED RECEIPT OF DELIVERY.
3. “DIG-SAFE” IS REQUIRED TO RESPOND TO THE NOTICE WITHIN SEVENTY-TWO (72) HOURS FROM THE TIME SAID NOTICE IS RECEIVED BY DESIGNATING AT THE LOCUS THE LOCATION OF PIPES, MAINS, WIRES, OR CONDUITS.
4. GENERAL CONTRACTORS SHALL NOT COMMENCE WITH WORK UNTIL “DIG-SAFE” HAS RESPONDED AS NOTED ABOVE.
5. PRIOR TO THE “DIG-SAFE” NOTIFICATION, THE OWNER REQUIRES GENERAL CONTRACTORS TO PROVIDE THEIR SUPERINTENDENT WITH CURRENT “DIG-SAFE” REGULATIONS, AND A COPY OF MASSACHUSETTS GENERAL LAWS, CHAPTER 82, SECTION 40.

1.16 DEBRIS REMOVAL

A. THE GENERAL CONTRACTOR SHALL COORDINATE THE REMOVAL OF ALL DEMOLITION AND CONSTRUCTION WASTE BY THE SUBCONTRACTOR FROM THE JOB SITE ON A DAILY BASIS. WASTE SHALL BE SEGREGATED FOR RECYCLING. COMPLY WITH REQUIREMENTS OF SECTION 017419 - CONSTRUCTION WASTE MANAGEMENT AND DISPOSAL.

B. DEBRIS SHALL BE LEGALLY DISPOSED OF IN A D.E.P. APPROVED DISPOSAL SITE. THE SITE TO BE USED SHALL BE SUBMITTED TO AND APPROVED BY THE DCAM PROJECT MANAGER PRIOR TO THE START OF CONSTRUCTION. ALL REQUIRED DUMPING PERMITS SHALL BE OBTAINED PRIOR TO START OF CONSTRUCTION. GENERAL CONTRACTOR SHALL SUBMIT RECEIPTS FROM THE DISPOSAL SITE(S) AS EVIDENCE OF LEGAL DISPOSAL. THE SUBCONTRACTOR SHALL PAY THE COST OF ANY CHARGES FOR DEBRIS REMOVAL.

C. THE GENERAL CONTRACTOR SHALL BEAR RESPONSIBILITY FOR MAINTAINING THE BUILDING AND SITE CLEAN AND FREE OF DEBRIS, LEAVING ALL WORK IN CLEAN AND PROPER CONDITION SATISFACTORY TO DCAM AND THE DESIGNER. THE GENERAL CONTRACTOR SHALL ENSURE THAT EACH OF THE SUBCONTRACTORS CLEAN UP DURING AND IMMEDIATELY UPON COMPLETION OF THEIR WORK. CLEAN UP INCLUDES THE FOLLOWING TASKS:

1. REMOVE ALL RUBBISH, WASTE, TOOLS, EQUIPMENT, APPURTENANCES CAUSED BY AND USED IN THE EXECUTION OF WORK.

D. PREVENT THE ACCUMULATION OF DEBRIS AT THE CONSTRUCTION SITE, STORAGE AREAS, PARKING AREAS, AND ALONG ACCESS ROADS AND HAUL ROUTES.

E. PROVIDE CONTAINERS FOR DEPOSIT OF DEBRIS AND SCHEDULE PERIODIC COLLECTION AND DISPOSAL OF DEBRIS.

F. PROHIBIT OVERLOADING OF TRUCKS TO PREVENT SPILLAGE ON ACCESS AND HAUL ROUTES.

G. THE GENERAL CONTRACTOR SHALL BE RESPONSIBLE FOR PROPER DISPOSAL OF ALL CONSTRUCTION DEBRIS LEAVING THE SITE.

1.17 FIELD MEASUREMENTS

A. ALTHOUGH CARE HAS BEEN TAKEN TO ENSURE THEIR ACCURACY, THE DIMENSIONS SHOWN FOR EXISTING ITEMS AND STRUCTURES ARE NOT GUARANTEED. IT IS THE RESPONSIBILITY OF THE GENERAL CONTRACTOR TO VERIFY THESE DIMENSIONS IN THE FIELD BEFORE FABRICATING ANY CONSTRUCTION COMPONENT. NO CLAIMS FOR EXTRA PAYMENT DUE TO INCORRECT DIMENSIONS WILL BE CONSIDERED BY THE COMMONWEALTH.

1.18 SAFETY REGULATIONS

A. THIS PROJECT IS SUBJECT TO COMPLIANCE WITH PUBLIC LAW 91 596 "OCCUPATIONAL SAFETY AND HEALTH ACT" LATEST EDITION (OSHA 29 CFR 1926), WITH RESPECT TO ALL RULES AND REGULATIONS PERTAINING TO CONSTRUCTION, INCLUDING VOLUME 36, NUMBERS 75 AND 105, OF THE FEDERAL REGISTER, AS AMENDED, AND AS PUBLISHED BY THE U.S. DEPARTMENT OF LABOR.

B. SUBMIT THE NAME OF THE GENERAL CONTRACTOR'S SAFETY OFFICER TO THE DCAM PROJECT MANAGER. SUBMIT COPIES OF SAFETY REPORTS TO THE DCAM PROJECT MANAGER MONTHLY.

C. ALL ACCIDENT REPORTS ARE TO BE TRANSMITTED TO THE RESIDENT ENGINEER WITHIN 24 HOURS OF OCCURRENCE.

1.19 OSHA SAFETY AND HEALTH COURSE DOCUMENTATION

A. OSHA SAFETY AND HEALTH COURSE DOCUMENTATION RECORDS: CHAPTER 306 OF THE MASSACHUSETTS ACTS OF 2004 REQUIRES THAT EVERYONE EMPLOYED AT THE JOBSITE MUST COMPLETE A MINIMUM 10-HOUR LONG COURSE IN CONSTRUCTION SAFETY AND HEALTH APPROVED BY THE U.S. OCCUPATIONAL SAFETY AND HEALTH ADMINISTRATION (OSHA) PRIOR TO WORKING AT THE JOBSITE. COMPLIANCE IS REQUIRED OF GENERAL CONTRACTORS' AND SUBCONTRACTORS' ON-SITE EMPLOYEES AT ALL LEVELS WHETHER STATIONED IN THE TRAILER OR WORKING IN THE FIELD. UNLESS THE MASSACHUSETTS ATTORNEY GENERAL'S OFFICE INDICATES OTHERWISE, THIS REQUIREMENT DOES NOT APPLY TO HOME-OFFICE EMPLOYEES VISITING THE SITE OR TO SUPPLIERS' EMPLOYEES WHO ARE MAKING DELIVERIES.

B. DOCUMENTATION RECORDS SHALL BE INITIALLY COMPILED BY THE GENERAL CONTRACTOR AND SUBCONTRACTORS AS PART OF THEIR CERTIFIED PAYROLLS, AND THE GENERAL CONTRACTOR SHALL CREATE AND MAINTAIN A COPY OF THE DOCUMENTATION ON SITE AT ALL TIMES. ON-SITE DOCUMENTATION SHALL BE FILED IN ALPHABETICAL ORDER AND IMMEDIATELY AVAILABLE TO DCAM'S PROJECT MANAGER AND OSHA INSPECTORS. FINES IMPOSED FOR NON-COMPLIANCE SHALL BE PROMPTLY PAID BY THE GENERAL CONTRACTOR AT NO ADDITIONAL EXPENSE TO DCAM. DELAYS IN THE PROGRESS OF THE WORK CAUSED BY SUCH NON-COMPLIANCE WILL NOT BE ACCEPTABLE AS THE BASIS FOR AN EXTENSION OF CONTRACT TIME OR CHANGE ORDER REQUEST.

1.20 DAMAGE RESPONSIBILITY

A. THE GENERAL CONTRACTOR SHALL REPAIR, AT NO COST TO DCAM, ANY DAMAGE TO BUILDING ELEMENTS, SITE APPURTENANCES, LANDSCAPING, UTILITIES, ETC. CAUSED DURING DEMOLITION OPERATION AND WORK OF THIS CONTRACT.

1.21 OWNER FURNISHED PRODUCTS

A. PRODUCTS INDICATED "N.I.C." (NOT IN CONTRACT), OR "E. O." (EQUIPMENT BY OWNER), OR "O.F.O.I." (OWNER FURNISHED OWNER INSTALLED), OR OTHER SIMILAR ACRONYMS AS DEFINED IN THE CONTRACT DOCUMENTS WILL BE FURNISHED AND INSTALLED BY THE OWNER. COORDINATION AND PROVISION OF SERVICE LINES FOR SUCH PRODUCTS SHALL BE INCLUDED UNDER THESE CONSTRUCTION CONTRACT DOCUMENTS, IF INDICATED. FINAL CONNECTIONS FROM SERVICE LINES TO EQUIPMENT WILL BE BY THE OWNER, UNLESS OTHERWISE INDICATED.

1.22 USER AGENCY OCCUPANCY

A. BENEFICIAL USE AND OCCUPANCY: REFER TO REQUIREMENTS IN SECTION 017700 - CONTRACT CLOSEOUT, PAR. 1.6.

B. USE AND OCCUPANCY: WHEN THE PROJECT IS SUBSTANTIALLY COMPLETE (WITH ALL WORK AFFECTING HEALTH, SAFETY, AND FUNCTION TOTALLY COMPLETED, AND WITH LESS THAN ONE PERCENT (<1%) OF THE CONTRACT VALUE REMAINING) AND READY FOR USE AND OCCUPANCY AS DETERMINED BY THE DESIGNER, THE DCAM PROJECT MANAGER AND THE OPERATING AGENCY, THEN THE USER AGENCY WILL TAKE CONTROL OF THEIR BUILDING AREA(S) AND BE RESPONSIBLE FOR OPERATING COSTS AND SECURITY.

1.23 ASBESTOS AND HAZARDOUS MATERIALS DISCOVERY

A. IF UNANTICIPATED ASBESTOS-CONTAINING MATERIALS OR OTHER HAZARDOUS MATERIALS NOT INCLUDED IN CONTRACT ARE DISCOVERED AT ANY TIME DURING THE COURSE OF WORK, THE GENERAL CONTRACTOR SHALL CEASE WORK IN THE AFFECTED AREAS ONLY AND CONTINUE WORK IN OTHER AREAS, AT THE SAME TIME NOTIFY DCAM AND THE DESIGNER OF SUCH DISCOVERY. DO NOT PROCEED WITH WORK IN SUCH AFFECTED AREAS UNTIL WRITTEN INSTRUCTIONS ARE RECEIVED. IF REMOVAL IS REQUIRED, PAYMENT WILL BE MADE IN ACCORDANCE WITH THE CONTRACT UNIT PRICES BID FOR EACH RESPECTIVE MATERIAL. IN THE ABSENCE OF UNIT PRICES, COSTS SHALL BE NEGOTIATED OR OTHERWISE ESTABLISHED PRIOR TO COMMENCEMENT OF REMOVAL, IN ACCORDANCE WITH PROVISIONS OF THE CONTRACT.

1.24 SPECIAL REQUIREMENTS

A. THE GENERAL CONTRACTOR SHALL PREPARE A HEALTH AND SAFETY PLAN THAT ADDRESSES PROTECTION OF EMPLOYEE AND PUBLIC HEALTH AND SAFETY. THE MINIMUM CONTENTS OF THE PLAN ARE SPECIFIED IN SECTION 013300 – SUBMITTAL REQUIREMENTS.

B. THE GENERAL CONTRACTOR SHALL BE SOLELY RESPONSIBLE FOR IMPLEMENTING THE PROCEDURES SPECIFIED IN THE PLAN.

C. THE GENERAL CONTRACTOR SHALL MAKE AVAILABLE COMPLETE SETS OF PERSONAL PROTECTIVE EQUIPMENT AND CLOTHING TO DCAM FOR USE DURING SITE OBSERVATIONS/INSPECTIONS BY DCAM AND THE DESIGNER. THESE SHALL BE SUPPLIED AND MAINTAINED AT NO COST TO DCAM AND THE DESIGNER, AND SHALL BE RETURNED TO THE GENERAL CONTRACTOR UPON THE COMPLETION OF WORK, EXCEPT FOR DISPOSABLE PROTECTIVE CLOTHING.

1. THE GENERAL CONTRACTOR SHALL PROVIDE A REPOSITORY FOR COLLECTION AND DISPOSAL OF HEALTH AND SAFETY MATERIALS. COLLECTION AND DISPOSAL OF CONTAMINATED DISPOSABLE SUPPLIES SHALL BE AT NO ADDITIONAL COST.

1.25 LIST OF DRAWINGS

G-000 - COVER SHEET
M-001 - MECHANICAL SYMBOLS
M-002 - MECHANICAL ABBREVIATIONS
M-003 - MECHANICAL CONTROLS SYMBOLS & ABBREVIATIONS
M-100 - McCORMACK GROUND FLOOR PLAN
M-101 - McCORMACK LEVEL 7 PLAN
M-102 - McCORMACK LEVEL 22 PLAN
M-200 - McCORMACK PLAZA
M-201 - McCORMACK LEVEL 1
M-202 - McCORMACK LEVEL 2
M-203 - McCORMACK LEVEL 3
M-204 - McCORMACK LEVEL 4
M-205 - McCORMACK LEVEL 5
M-206 - McCORMACK LEVEL 6
M-208 - McCORMACK LEVEL 8
M-209 - McCORMACK LEVEL 9
M-210 - McCORMACK LEVEL 10
M-211 - McCORMACK LEVEL 11
M-212 - McCORMACK LEVEL 12
M-213 - McCORMACK LEVEL 13
M-214 - McCORMACK LEVEL 14
M-215 - McCORMACK LEVEL 15
M-216 - McCORMACK LEVEL 16
M-217 - McCORMACK LEVEL 17
M-218 - McCORMACK LEVEL 18
M-219 - McCORMACK LEVEL 19
M-220 - McCORMACK LEVEL 20
M-221 - McCORMACK LEVEL 21
M-600 - MECHANICAL DIAGRAMS
M-700 - MECHANICAL CONTROLS
M-701 - MECHANICAL CONTROLS
M-702 - MECHANICAL CONTROLS
M-703 - MECHANICAL CONTROLS
M-704 - MECHANICAL CONTROLS
M-705 - MECHANICAL CONTROLS
M-706 - MECHANICAL CONTROLS
M-707 - MECHANICAL CONTROLS
M-800 - MECHANICAL DETAILS
M-900 - MECHANICAL SCHEDULES

PART 2 – PRODUCTS
NOT USED

PART 3 – EXECUTION
NOT USED

END OF SECTION

SECTION 013100

PROJECT MANAGEMENT AND COORDINATION

PART 1 - GENERAL

1.1 GENERAL PROVISIONS

A. ATTENTION IS DIRECTED TO THE CONTRACT AND GENERAL CONDITIONS AND ALL SECTIONS WITHIN DIVISION 01 - GENERAL REQUIREMENTS WHICH ARE HEREBY MADE A PART OF THIS SECTION OF THE SPECIFICATIONS.

1.2 SUMMARY

A. WITHOUT LIMITATIONS, COORDINATION WILL INCLUDE CRITICAL PATH METHOD SCHEDULING (CPM), COORDINATION OF SUBMITTALS, COORDINATION OF ALL ELEMENTS OF THE WORK, AND COORDINATION OF CONTRACT CLOSEOUT.

B. DESCRIPTION:

1. COORDINATE SCHEDULING, SUBMITTALS, AND WORK OF THE VARIOUS SUBCONTRACTORS AND ELEMENTS OF THE WORK TO ASSURE EFFICIENT AND ORDERLY SEQUENCE OF INSTALLATION OF CONSTRUCTION ELEMENTS, WITH PROVISIONS FOR ACCOMMODATING ITEMS TO BE INSTALLED LATER.
2. COORDINATE SEQUENCE OF THE WORK TO ACCOMMODATE USER AGENCY PARTIAL (BENEFICIAL) OCCUPANCY.

C. MEETINGS:

1. IN ADDITION TO PROGRESS MEETINGS, HOLD COORDINATION MEETINGS AND PRE-INSTALLATION CONFERENCES WITH PERSONNEL AND SUBCONTRACTORS TO ASSURE COORDINATION OF THE WORK. THE COORDINATION MEETINGS ARE TO BE SEPARATE FROM THE COMMISSIONING OR COMMISSIONING MEETINGS UNDER SECTION 018100 – COMMISSIONING.

D. COORDINATION OF SUBMITTALS:

1. SCHEDULE AND COORDINATE SUBMITTALS.
2. COORDINATE WORK OF VARIOUS SUBCONTRACTORS HAVING INTERDEPENDENT RESPONSIBILITIES FOR INSTALLING, CONNECTING TO, AND PLACING IN SERVICE SUCH EQUIPMENT.
3. COORDINATE REQUESTS FOR SUBSTITUTIONS TO ASSURE COMPATIBILITY OF SPACE, OF OPERATING ELEMENTS, AND EFFECT ON WORK OF OTHER SUBCONTRACTORS,

E. MECHANICAL AND ELECTRICAL COORDINATION

1. PROVIDE A PART-TIME MECHANICAL/ELECTRICAL COORDINATOR (MEC) TO THE PROJECT TO PROVIDE MECHANICAL AND ELECTRICAL COORDINATION. THE NAME OF THE COORDINATOR, TOGETHER WITH HIS/HER QUALIFICATIONS, SHALL BE SUBMITTED TO THE DCAM PROJECT MANAGER AND THE DESIGNER FOR APPROVAL.

F. THE MEC SHALL BE A HIGHLY DESIGN AND CONSTRUCTION COORDINATION EXPERIENCED INDIVIDUAL, ADDITIONAL TO THE GENERAL CONTRACTOR'S PROJECT MANAGER, PROJECT SCHEDULER AND PROJECT SUPERINTENDENT.

G. THE MEC SHALL ATTEND ALL CONSTRUCTION MEETINGS.

H. COORDINATE ALL ACTIVITIES ASSOCIATED WITH COMMISSIONING ACTIVITIES AND THE WORK OF THE TEST TECHNICIAN.

I. COMMISSIONING:

1. A SYSTEMATIC PROCESS OF ENSURING THAT ALL BUILDING SYSTEMS PERFORM INTERACTIVELY ACCORDING TO THE DESIGNER'S DESIGN INTENT AND THE USER AGENCY'S OPERATIONAL NEEDS. THIS IS TO BE ACHIEVED THROUGH ACTUAL VERIFICATION OF SYSTEMS PERFORMANCE DURING THE CONSTRUCTION PERIOD BY THE OWNER'S CONSULTANT UNDER SECTION 018100 - COMMISSIONING.
2. THE COMMISSIONING PROCESS DOES NOT TAKE AWAY FROM, OR REDUCE THE RESPONSIBILITY OF, THE GENERAL CONTRACTOR AND INSTALLING SUBCONTRACTORS TO PROVIDE A FINISHED AND FULLY FUNCTIONING PRODUCT.
3. THE MEC SHALL PROVIDE ALL NECESSARY DOCUMENTS AND COORDINATION REQUIRED FOR THE CX PROCESS TO THE OWNER'S COMMISSIONING AGENT (CA) TO COMPLETE THE COMMISSIONING PROCESS AS OUTLINED IN SECTION 018100 - COMMISSIONING.

J. BIM COORDINATION: REFER TO SECTION 013129 - BIM COORDINATION FOR REQUIREMENTS.

1.3 MECHANICAL AND ELECTRICAL COORDINATOR (MEC)

A. THE PURPOSE OF THE GENERAL CONTRACTOR'S COORDINATOR SHALL BE TO PREVENT CONFLICTS IN THE INSTALLATION OF ALL MATERIALS AND EQUIPMENT FOR THE ENTIRE PROJECT, BUT NOT SPECIFICALLY RELATING TO THE MECHANICAL AND ELECTRICAL SUBCONTRACTORS. ALTHOUGH THE GENERAL CONDITIONS AND GENERAL REQUIREMENTS OF THE CONSTRUCTION CONTRACT APPLY TO THE GENERAL CONTRACTOR AND ALL SUBCONTRACTORS, RESPECTIVELY, WITH REGARDS TO THE COORDINATION OF ALL SUBCONTRACTORS, THE GENERAL CONTRACTOR SHALL EMPLOY A MECHANICAL/ELECTRICAL COORDINATOR (MEC), IN ADDITION TO THE GENERAL CONTRACTOR'S COORDINATOR, WHO SHALL SPECIFICALLY ENSURE AND BE RESPONSIBLE FOR THE TOTAL AND COMPLETE COORDINATION OF ALL WORK OF THE MECHANICAL AND ELECTRICAL SUBCONTRACTORS AS SUCH WORK RELATES TO THE GENERAL CONTRACTOR'S WORK AND ALL OTHER SUBCONTRACTORS. THE MEC SHALL BE PROVIDED FOR THE PROJECT FROM INITIAL PROJECT'S NOTICE TO PROCEED (D19) UNTIL ALL BUILDING SYSTEMS HAVE BEEN ACCEPTED BY BOTH THE DESIGNER AND THE DCAM PROJECT MANAGER. THE MEC SHALL BE ON-SITE PART-TIME DURING THE CONSTRUCTION PHASES (A MINIMUM OF TWO DAYS PER WEEK), BUT MORE FREQUENTLY AS NEEDED FOR COORDINATION OF THE WORK BEING PERFORMED.

1. HAVE EXTENSIVE EXPERIENCE IN BUILDING CONSTRUCTION, SECURITY AND TELE/DATA SYSTEMS, FOOD SERVICE EQUIPMENT, MEDICAL AND RESEARCH EQUIPMENT, ELEVATORS, HVAC, HOT WATER HEATING, CHILLED WATER, PLUMBING, FIRE PROTECTION, ELECTRICAL, EMERGENCY POWER, FIRE ALARM, LIFE SAFETY SYSTEMS OR SIMILAR COMPLEXITY TO THOSE CONTAINED IN THESE DOCUMENTS OR IMPACTED BY THE WORK.
2. HAVE EXCELLENT WORKING KNOWLEDGE OF COMPLEX ENVIRONMENTAL, FIRE ALARM, AND ELECTRIC POWER CONTROL AND FACILITY MANAGEMENT SYSTEMS; BE CAPABLE OF UNDERSTANDING CONTROL VENDORS' OPERATING SYSTEM AND CONTROL CODE, BE CAPABLE OF TROUBLE-SHOOTING CONTROL CODE AND RECOMMENDING NECESSARY MODIFICATIONS.
3. BE COMPETENT IN SYSTEMS DESIGN AND INTENT.
4. HAVE EXCELLENT COMMUNICATION AND WRITING SKILLS, BE HIGHLY ORGANIZED, AND BE ABLE TO WORK WELL WITH BOTH MANAGEMENT AND SUBCONTRACTORS.
5. MINIMUM BACHELOR'S DEGREE IN MECHANICAL ENGINEERING WITH 10 YEARS (MINIMUM) EXPERIENCE IN THE DESIGN AND FIELD ADMINISTRATION OF BUILDING MECHANICAL AND ELECTRICAL SYSTEMS, AND WORKING KNOWLEDGE OF PROJECT SCHEDULING.
6. THE GENERAL CONTRACTOR SHALL SUBMIT THE MEC'S RESUME AND SAMPLE DOCUMENTS TO THE DCAM PROJECT MANAGER AND DESIGNER FOR APPROVAL; WHICH SHALL INCLUDE THE FOLLOWING:
   a. EDUCATION AND TECHNICAL TRAINING.

b. RELEVANT WORK EXPERIENCE:
   1) JOB NAME
   2) POSITION HELD
   3) WORK HISTORY (INCLUDE DATES AND POSITIONS HELD)

c. EXAMPLES OF PRIOR BUILDING COMMISSIONING PROJECTS PERFORMED BY THE PROPOSED MEC:
   1) LIST OF PROJECTS SIMILAR IN COMMISSIONING SCOPE AND COMPLEXITY, INCLUDING DATES OF PROJECT COMPLETIONS.

B. THE MEC CANNOT BE FINANCIALLY ASSOCIATED WITH ANY OF THE DIVISION 01 THROUGH 31 SUBCONTRACTORS OR VENDORS PRIOR TO ENGAGING IN THIS CONTRACT, TO AVOID POTENTIAL CONFLICTS OF INTEREST.

C. THE DCAM PROJECT MANAGER AND DESIGNER RESERVE THE RIGHT TO PERSONALLY INTERVIEW MEC CANDIDATE PRIOR TO ACCEPTING PLACEMENT IN THE POSITION. FINAL APPROVAL OF THE MEC WILL BE BY THE DCAM PROJECT MANAGER. ADDITIONALLY, ANY CHANGE IN THE APPROVED MEC SHALL REQUIRE THE PRIOR CONSENT OF THE DCAM PROJECT MANAGER.

1.4 MECHANICAL AND ELECTRICAL COORDINATOR'S DUTIES

A. COORDINATE THE WORK OF THE MECHANICAL AND ELECTRICAL SUBCONTRACTORS:

1. FOR TEMPORARY UTILITIES.
2. AMONG THE WORK OF THE MECHANICAL AND ELECTRICAL SUBCONTRACTORS.
3. AMONG THE WORK OF ALL OTHER SUBCONTRACTORS, INCLUDING THE MECHANICAL AND ELECTRICAL SUBCONTRACTORS.

B. COORDINATE THE SCHEDULE OF MECHANICAL AND ELECTRICAL SUBCONTRACTORS:

1. VERIFY TIMELY DELIVERIES OF PRODUCTS FOR INSTALLATION BY OTHER SUBCONTRACTORS.
2. VERIFY THAT LABOR AND MATERIALS ARE ADEQUATE TO MAINTAIN SCHEDULES.

C. CONDUCT CONFERENCES AMONG MECHANICAL AND ELECTRICAL SUBCONTRACTORS AND OTHER CONCERNED PARTIES, AS NECESSARY TO:

1. MAINTAIN COORDINATION AND SCHEDULES.
2. RESOLVE MATTERS IN DISPUTE.

D. PARTICIPATE IN ALL PROJECT MEETINGS:

1. REPORT PROGRESS OF ALL MECHANICAL AND ELECTRICAL WORK.
2. RECOMMEND NEEDED CHANGES IN SCHEDULES.
3. TRANSMIT MINUTES OF MEETINGS TO MECHANICAL AND ELECTRICAL SUBCONTRACTORS, AS APPROPRIATE.
4. COMMISSIONING MEETINGS.

E. TEMPORARY UTILITIES:

1. COORDINATE INSTALLATION, OPERATION, AND MAINTENANCE, TO VERIFY COMPLIANCE WITH PROJECT REQUIREMENTS AND WITH CONTRACT DOCUMENTS.

F. SHOP DRAWINGS, PRODUCT DATA AND SAMPLES:

1. PRIOR TO SUBMITTAL, REVIEW FOR COMPLIANCE WITH CONTRACT DOCUMENTS.
   a. CHECK FIELD DIMENSIONS AND CLEARANCE DIMENSIONS.
   b. CHECK RELATION TO AVAILABLE SPACE.
   c. REVIEW THE EFFECT OF ANY CHANGES ON THE WORK OF OTHER CONTRACTS OR OTHER SUBCONTRACTORS.

d. CHECK ANCHOR BOLT SETTINGS.
e. CHECK COMPATIBILITY WITH EQUIPMENT AND WORK OF OTHER SUBCONTRACTORS.
f. CHECK MOTOR VOLTAGES AND CONTROL CHARACTERISTICS.
g. COORDINATE CONTROLS AND INTERLOCKS:
   1) VOLTAGES.
   2) WIRING OF PNEUMATIC AND CONTROL DIAGRAMS.
h. COORDINATE WIRING AND CONTROL DIAGRAMS.

G. COORDINATION DRAWINGS:

1. IN ADDITION TO THE COORDINATION DRAWINGS SUBMITTED BY THE MECHANICAL AND ELECTRICAL CONTRACTORS, PREPARE ADDITIONAL DRAWINGS AS REQUIRED TO ASSURE COORDINATION OF THE WORK, OR AFFECTED BY, MECHANICAL AND ELECTRICAL WORK, OR TO RESOLVE CONFLICTS.
2. REPRODUCE AND DISTRIBUTE APPROVED COPIES TO ALL CONCERNED PARTIES.

H. VERIFY THAT SUBCONTRACTORS MAINTAIN ACCURATE RECORD DOCUMENTS.

I. SUBSTITUTIONS AND CHANGES:

1. REVIEW PROPOSALS AND REQUESTS.
   a. CHECK FOR COMPLIANCE WITH CONTRACT DOCUMENTS.
   b. VERIFY COMPATIBILITY WITH WORK AND EQUIPMENT OF OTHER SUBCONTRACTORS.
2. RECOMMEND ACTION TO GENERAL CONTRACTOR.
3. TEST MATERIALS, ASSEMBLIES AND/OR FABRICATIONS THAT ARE SUBMITTED AS SUBSTITUTIONS, WHEN NECESSARY TO ASSURE THAT THEY MEET CONTRACTUAL DESIGN STANDARDS.

J. OBSERVE MECHANICAL AND ELECTRICAL WORK FOR COMPLIANCE WITH REQUIREMENTS OF THE CONTRACT DOCUMENTS:

1. MAINTAIN LIST OF OBSERVED DEFICIENCIES AND DISCREPANCIES.
2. PROMPTLY REPORT DEFICIENCIES AND DISCREPANCIES TO GENERAL CONTRACTOR.

K. ASSEMBLE DOCUMENTATION FOR HANDLING OF CLAIMS OR DISPUTES INVOLVING MECHANICAL AND ELECTRICAL SUBCONTRACTORS.

L. EQUIPMENT COMMISSIONING:

1. THE MEC SHALL COORDINATE ALL COMMISSIONING ACTIVITIES WITH THE OWNER'S COMMISSIONING AGENT.

M. INSPECTION AND ACCEPTANCE OF EQUIPMENT:

1. PRIOR TO INSPECTION, CHECK THAT EQUIPMENT IS CLEAN, REPAINTED AS REQUIRED, TESTED AND OPERATIONAL.
2. ASSIST INSPECTOR; PREPARE LIST OF ITEMS TO BE COMPLETED OR CORRECTED.
3. SHOULD ACCEPTANCE AND OPERATION OF EQUIPMENT CONSTITUTE THE BEGINNING OF THE GUARANTEE PERIOD, PREPARE, AND TRANSMIT WRITTEN NOTICE TO THE GENERAL CONTRACTOR, FOR HIS/HER TRANSMITTAL TO THE DESIGNER AND THE DCAM PROJECT MANAGER FOR CONCURRENCE.

N. ASSEMBLE AS-BUILT DOCUMENTS FROM SUBCONTRACTORS, TRANSFER SUBCONTRACTORS' AS-BUILT DOCUMENTATION TO ELECTRONIC FORMAT, AND TRANSMIT TO DESIGNER. ALL INFORMATION SHALL BE SUBMITTED ON ELECTRONIC MEDIA (CD). DRAWINGS SHOULD BE ON AUTODESK AUTOCAD VER. 2000 OR LATER, WORD DOCUMENTS IN .PDF FORMAT, BASELINE AND SUBSEQUENTLY APPROVED SCHEDULES IN PRIMAVERA FORMAT, SCHEDULE OF VALUES IN EXCEL FORMAT, AND APPROVED SHOP DRAWING SUBMITTALS SCANNED IN SHOWING MODEL NUMBERS, CAPACITIES, AND ALL RELEVANT INFORMATION THAT CAN BE

AUTOMATICALLY PROPAGATED TO THE DCAM CAMIS SYSTEM. (REFER TO SECTION 017700 – CONTRACT CLOSEOUT FOR ADDITIONAL FORMATTING REQUIREMENTS).

1. AS-BUILT DOCUMENTS WILL BE COMPILED ON COMPACT DISKS AND WILL INCLUDE, WITHOUT LIMITATION, THE FOLLOWING:
   a. ALL DRAWINGS, INCLUDING TITLE SHEET, CODE ANALYSIS, GEOTECHNICAL, CIVIL, STRUCTURAL, ARCHITECTURAL, FIRE PROTECTION, PLUMBING, MECHANICAL, ELECTRICAL, SECURITY, DATA/TELECOMMUNICATIONS.
   b. ALL SPECIFICATIONS IN .PDF FORMAT WITH ADDENDA.
   c. SHOP DRAWINGS AND PRODUCT CUTS, SCANNED IN; APPROVED SHEETS ONLY.
   d. PROJECT SCHEDULES, BASELINE AND ALL UPDATES.

O. OVERSEE AND PROVIDE TRAINING FOR THE SYSTEMS TO BE COMMISSIONED UNDER SECTION 018100 – COMMISSIONING.

1. VERIFY THAT THE USER AGENCY'S OPERATING PERSONNEL ARE TRAINED IN EACH PARTICULAR COMMISSIONED EQUIPMENT'S OPERATION AND MAINTENANCE.
2. OBTAIN A WRITTEN SIGN-OFF, FROM THE RESPONSIBLE USER AGENCY'S PERSONNEL, THAT CERTIFY THEY ARE CAPABLE TO OPERATE AND MAINTAIN THE PARTICULAR COMMISSIONED EQUIPMENT SUCH THAT THEIR HEALTH AND SAFETY ARE NOT COMPROMISED.
3. VERIFY THAT ALL TRAINING REQUIREMENTS MEET THE SPECIFIED TRAINING WITHIN THE PARTICULAR SPECIFICATION DIVISIONS AND THE REQUIREMENTS OF THIS SPECIFICATION SECTION.
4. VERIFY THAT TRAINING IS PROVIDED ONLY FROM CERTIFIED INSTRUCTORS. THE INSTRUCTORS SHALL BE CERTIFIED AND APPROVED BY THE PARTICULAR EQUIPMENT MANUFACTURER. IN THE ABSENCE OF MANUFACTURER'S CERTIFICATION, THE TRAINER SHALL HAVE A MINIMUM OF TEN YEARS EXPERIENCE IN THE INSTALLATION, OPERATION, AND REPAIR OF THE PARTICULAR EQUIPMENT.
5. VERIFY THAT ALL TRAINING IS VIDEOTAPED BY A PROFESSIONAL WHO IS REGULARLY EMPLOYED IN VIDEO PHOTOGRAPHY.

P. VERIFY THAT O & M DOCUMENTATION IS COMPLETE AND APPROVED BY THE DESIGNER AND THE DCAM PROJECT MANAGER PRIOR TO TRANSMITTAL TO THE USER AGENCY.

1.5 MECHANICAL AND ELECTRICAL COORDINATOR'S COORDINATION DRAWINGS

A. CAUSE TO BE PREPARED AND SUBMIT TO THE GENERAL CONTRACTOR, COORDINATION DRAWINGS FOR SITE UTILITIES AND BUILDING(S), FOR DESIGNER AND THE DCAM PROJECT MANAGER'S REVIEW.

B. SEQUENCE OF COORDINATION DRAWINGS PREPARATION SHALL BE AS FOLLOWS:

1. COORDINATION DRAWINGS: THE GENERAL CONTRACTOR SHALL BE FULLY RESPONSIBLE FOR COORDINATING ALL SUBCONTRACTORS, COORDINATING CONSTRUCTION SEQUENCES AND SCHEDULES, AND COORDINATING THE ACTUAL INSTALLED LOCATION AND INTERFACE OF ALL WORK. BEFORE MATERIALS ARE FABRICATED OR THE WORK BEGUN, THE GENERAL CONTRACTOR SHALL SUPERVISE AND DIRECT THE CREATION OF ONE (1) COMPLETE SET OF COORDINATION DRAWINGS SHOWING THE COMPLETE COORDINATION AND INTEGRATION OF ALL WORK OF THIS PROJECT INCLUDING, BUT NOT LIMITED TO, STRUCTURAL, ARCHITECTURAL, MECHANICAL, PLUMBING, FIRE PROTECTION, AND ELECTRICAL DISCIPLINES. COORDINATION DRAWINGS ARE INTENDED TO ASSIST THE GENERAL CONTRACTOR DURING CONSTRUCTION AND SHALL NOT BE USED FOR "SHOP DRAWINGS", "RECORD DRAWINGS", OR ANY OTHER REQUIRED SUBMITTAL.
   a. BASE SHEETS: THE GENERAL CONTRACTOR SHALL PREPARE AND PROVIDE ONE ACCURATELY SCALED SET OF BUILDING COORDINATION DRAWING "BASE SHEETS" ON REPRODUCIBLE TRANSPARENCIES OR ELECTRONIC FORMAT SHOWING ALL ARCHITECTURAL AND STRUCTURAL WORK. BASE SHEETS SHALL BE AT 1/4-INCH SCALE, EXCEPT CONGESTED AREAS AND SECTIONS THROUGH VERTICAL SHAFTS SHALL BE AT 3/8-INCH SCALE.

b. HVAC: THE GENERAL CONTRACTOR SHALL CIRCULATE THE COORDINATION DRAWING BASE SHEETS TO THE HVAC SUBCONTRACTOR AND REQUIRE THE HVAC SUBCONTRACTOR TO ACCURATELY AND NEATLY SHOW THE ACTUAL SIZE AND LOCATION OF ALL HVAC EQUIPMENT AND WORK. DUCTWORK SHALL BE DRAWN TO SCALE WITH FULL DIMENSIONS INDICATED GRAPHICALLY. SINGLE LINE DIAGRAMS ARE NOT ACCEPTABLE. THE HVAC SUBCONTRACTOR SHALL NOTE ANY APPARENT CONFLICTS, SUGGEST ALTERNATE SOLUTIONS, AND RETURN THE COORDINATION DRAWINGS TO THE GENERAL CONTRACTOR.

c. PLUMBING: THE GENERAL CONTRACTOR SHALL CIRCULATE THE COORDINATION DRAWINGS TO THE PLUMBING SUBCONTRACTOR AND REQUIRE THE PLUMBING SUBCONTRACTOR TO ACCURATELY AND NEATLY SHOW THE ACTUAL SIZE AND LOCATION OF ALL PLUMBING EQUIPMENT AND WORK. THE PLUMBING SUBCONTRACTOR SHALL NOTE ANY APPARENT CONFLICTS, SUGGEST ALTERNATE SOLUTIONS, AND RETURN THE COORDINATION DRAWINGS TO THE GENERAL CONTRACTOR. SLOPED PLUMBING LINES HAVE RIGHT OF WAY.

d. ELECTRICAL: THE GENERAL CONTRACTOR SHALL CIRCULATE THE COORDINATION DRAWINGS TO THE ELECTRICAL SUBCONTRACTOR AND REQUIRE THE ELECTRICAL SUBCONTRACTOR TO ACCURATELY AND NEATLY SHOW THE ACTUAL SIZE AND LOCATION OF ALL ELECTRICAL EQUIPMENT AND WORK. THE ELECTRICAL SUBCONTRACTOR SHALL NOTE ANY APPARENT CONFLICTS, SUGGEST ALTERNATE SOLUTIONS, AND RETURN THE COORDINATION DRAWINGS TO THE GENERAL CONTRACTOR.

e. FIRE PROTECTION: THE GENERAL CONTRACTOR SHALL CIRCULATE THE COORDINATION DRAWINGS TO THE FIRE PROTECTION SUBCONTRACTOR AND REQUIRE THE FIRE PROTECTION SUBCONTRACTOR TO ACCURATELY AND NEATLY SHOW THE ACTUAL SIZE AND LOCATION OF ALL ELECTRICAL EQUIPMENT AND WORK. THE FIRE PROTECTION SUBCONTRACTOR SHALL NOTE ANY APPARENT CONFLICTS, SUGGEST ALTERNATE SOLUTIONS, AND RETURN THE COORDINATION DRAWINGS TO THE GENERAL CONTRACTOR.

f. OTHER SUBCONTRACTORS: THE GENERAL CONTRACTOR SHALL CIRCULATE THE COORDINATION DRAWINGS TO OTHER SUBCONTRACTORS WHOSE WORK MIGHT CONFLICT WITH OTHER WORK AND REQUIRE THESE SUBCONTRACTORS TO ACCURATELY AND NEATLY SHOW THE ACTUAL SIZE AND LOCATION OF ALL THEIR EQUIPMENT AND WORK. THESE SUBCONTRACTORS SHALL NOTE ANY APPARENT CONFLICTS, SUGGEST ALTERNATE SOLUTIONS, AND RETURN THE COORDINATION DRAWINGS TO THE GENERAL CONTRACTOR.

g. AFTER EACH SUBCONTRACTOR COMPLETES ITS DRAWINGS, A MEETING WILL BE HELD TO RESOLVE CONFLICTS BETWEEN THE SUBCONTRACTORS.
   1) COORDINATION DRAWINGS SHALL BE PREPARED AT NOT LESS THAN 1/4-INCH SCALE, AND ELECTRONIC AUTOCAD FILES OF SAME.
   2) SUBMIT DRAWINGS TO THE GENERAL CONTRACTOR FOR DESIGNER'S REVIEW PRIOR TO STARTING ANY INSTALLATIONS.
   3) ITEMS OF IMPOSSIBILITY OR REQUEST FOR VARIANCE SHALL BE CALLED TO THE GENERAL CONTRACTOR'S ATTENTION FOR THE DESIGNER'S RESOLUTION.

h. GENERAL CONTRACTOR REVIEW AND SUBMISSION: THE GENERAL CONTRACTOR SHALL CAREFULLY REVIEW, MODIFY AND APPROVE COORDINATION DRAWINGS IN COOPERATION WITH THE SUBCONTRACTORS TO ASSURE THAT CONFLICTS, IF ANY, ARE RESOLVED BEFORE WORK IN THE FIELD IS BEGUN AND TO ENSURE THAT THE LOCATION OF WORK EXPOSED TO VIEW IS AS INDICATED OR AS APPROVED BY THE DESIGNER AND THE DCAM PROJECT MANAGER.
   1) PRIOR TO SUBMITTAL OF THE COORDINATION DRAWINGS, THE SUBCONTRACTORS SHALL AFFIX THEIR SIGNATURES TO THE DRAWINGS.
   2) CLEARLY INDICATE CONFLICTS REQUIRING MODIFICATION TO THE GENERAL APPEARANCE OR THE FUNCTION OF THE PROJECT FOR DESIGNER AND DCAM PROJECT MANAGER'S REVIEWS, AND APPROVALS.
   3) THE GENERAL CONTRACTOR SHALL STAMP, SIGN AND SUBMIT THE COORDINATION DRAWING ORIGINALS TO THE DESIGNER FOR REVIEW AND APPROVAL, WITH ONE (1) PAPER COPY AND ONE (1) ADDITIONAL ELECTRONIC COPY ON COMPACT DISK TO THE DCAM PROJECT MANAGER, FOLLOWING THE SPECIFIED PROCEDURES AND POLICIES OUTLINED IN SECTION 013300 – SUBMITTAL REQUIREMENTS. IN NO CASE SHALL ACCEPTANCE OF COORDINATION DRAWINGS BE INTERPRETED AS A

RELEASE OF GENERAL CONTRACTOR OF RESPONSIBILITY TO FULFILL ALL OF THE REQUIREMENTS OF THE CONTRACT DOCUMENTS.

PART 2 - PRODUCTS (NOT USED)

PART 3 - EXECUTION (NOT USED)

END OF SECTION

SECTION 013200

CONSTRUCTION PROGRESS DOCUMENTATION

PART 1 - GENERAL

1.1 GENERAL PROVISIONS

A. ATTENTION IS DIRECTED TO THE CONTRACT AND GENERAL CONDITIONS AND ALL SECTIONS WITHIN DIVISION 01 - GENERAL REQUIREMENTS WHICH ARE HEREBY MADE A PART OF THIS SECTION OF THE SPECIFICATIONS.

1.2 REQUIREMENTS INCLUDED

A. PROCEDURES AND REQUIREMENTS FOR SUBMISSION AND REVIEW OF PROGRESS SCHEDULES AND REPORTS.

1.3 RELATED SECTIONS

A. CONTRACT AND GENERAL CONDITIONS

1. FAILURE TO COMPLETE THE WORK ON TIME - LIQUIDATED DAMAGES.

B. SECTION 011000 – SUMMARY

1. PROJECT MEETINGS.

C. SECTION 013100 - PROJECT MANAGEMENT AND COORDINATION

1. PROGRESS AND COORDINATION MEETINGS.

D. SECTION 013129 - BIM COORDINATION

1. CLASH DETECTION AND COORDINATION.
2. BIM ANIMATED SCHEDULE.
3. MATERIAL QUANTIFICATIONS.

E. SECTION 013300 - SUBMITTAL REQUIREMENTS

1. PROJECT REPORTS.
2. SCHEDULE OF VALUES.
3. SHOP DRAWINGS, PRODUCT DATA, AND SAMPLES.

F. SECTION 015000 - TEMPORARY FACILITIES AND CONTROLS

1. COMPUTER EQUIPMENT HARDWARE, SOFTWARE, AND ANCILLARY SUPPLIES.

1.4 CONSTRUCTION SCHEDULE

A. GENERAL CONTRACTOR SHALL PREPARE AND SUBMIT FOR DESIGNER AND ASSET MANAGEMENT'S INFORMATION, A CRITICAL PATH METHOD (CPM) PROGRESS SCHEDULE FOR THE WORK OF THE PROJECT. SAID SCHEDULE WILL BE COORDINATED WITH THE DESIGNER'S

WORK PLAN TO INCLUDE SEQUENCING OF THE PROJECT WORK (BOTH DESIGN AND CONSTRUCTION). IN ADDITION, A PROJECT SCHEDULER WILL BE REQUIRED FOR THIS PROJECT.

1. GENERAL SCHEDULE REQUIREMENTS
2. CRITICAL PATH METHOD (CPM) SCHEDULE REQUIREMENTS
3. CRITICAL PATH SUBMISSION REQUIREMENTS
4. CRITICAL PATH PROGRESS REPORTING AND CHANGES
5. PROGRESS PAYMENTS TO GENERAL CONTRACTOR
6. ADJUSTMENT OF CRITICAL PATH CONTRACT COMPLETION TIME

B. CRITICAL PATH METHOD SCHEDULER.

C. DESIGN OF PROJECT.

1.5 CRITICAL PATH METHOD SCHEDULING

A. GENERAL CONTRACTOR'S SCHEDULE REQUIREMENTS ARE CONTAINED HEREIN, AND ARE TO BE PROVIDED TO ASSET MANAGEMENT BY THE GENERAL CONTRACTOR.

1. GENERAL SCHEDULE REQUIREMENTS
   a. UPON THE FINALIZATION OF THE AGREEMENT, SIGNIFIED BY ISSUANCE OF THE ASSET MANAGEMENT NOTICE TO PROCEED WITH CONSTRUCTION, THE GENERAL CONTRACTOR SHALL DEVELOP HIS/HER NETWORK PLAN TO DEMONSTRATE COMPLETE FULFILLMENT OF ALL WORKING DOCUMENTS AND CONSTRUCTION CONTRACT REQUIREMENTS. THE GENERAL CONTRACTOR SHALL KEEP THE NETWORK PLAN UP TO DATE IN ACCORDANCE WITH THE PROGRESS AND LOGIC UPDATE REQUIREMENTS STATED HEREIN, AND SHALL UTILIZE THE NETWORK PLAN IN PLANNING, COORDINATING AND PERFORMING THE WORK OF THIS PROJECT (INCLUDING ALL ACTIVITIES OF DESIGNER, SUBCONTRACTORS, EQUIPMENT VENDORS AND SUPPLIERS). GENERAL CONTRACTOR'S MONTHLY PAYMENTS WILL BE MADE IN DIRECT RELATION TO THE ACTIVITY ITEMS SCHEDULED AND BY THE PROGRESS COMPLETION OF THOSE ACTIVITIES. UPON AUTHORIZED COMMENCEMENT OF THE CONSTRUCTION PHASE OF THE CONTRACT, AS SIGNIFIED BY THE ASSET MANAGEMENT NOTICE TO PROCEED WITH CONSTRUCTION, THE GENERAL CONTRACTOR SHALL PROVIDE THE MICROCOMPUTER, ASSOCIATED HARDWARE AND SOFTWARE REQUIRED FOR THE PROJECT SITE AS DEFINED UNDER SECTION 015000 – COMPUTER EQUIPMENT AND SOFTWARE. SUBSTITUTE SOFTWARE, APPROVED IN WRITING BY ASSET MANAGEMENT, WILL BE CONSIDERED PROVIDED THAT THE PROMISED SUBSTITUTION IS TOTALLY COMPATIBLE WITH PRIMAVERA AND ALL ASSET MANAGEMENT SOFTWARE.
   b. WITHIN 20 CALENDAR DAYS OF RECEIPT OF THE ASSET MANAGEMENT NOTICE TO PROCEED WITH CONSTRUCTION, THE GENERAL CONTRACTOR SHALL SUBMIT TO ASSET MANAGEMENT AND THE DESIGNER, AN EXPANDED TIME SCALED CRITICAL PATH METHOD (CPM) NETWORK DIAGRAM FOR THE FIRST 90 CALENDAR DAYS OF THE CONSTRUCTION PHASE OF THE PROJECT. THIS PRELIMINARY 90-DAY SCHEDULE NEED NOT BE RESOURCE LOADED.
   c. WITHIN 60 CALENDAR DAYS AFTER RECEIPT OF THE ASSET MANAGEMENT NOTICE TO PROCEED WITH CONSTRUCTION, THE GENERAL CONTRACTOR SHALL SUBMIT FOR REVIEW BY ASSET MANAGEMENT AND THE DESIGNER, A COMPLETE TIME SCALED CRITICAL PATH METHOD (CPM) NETWORK DIAGRAM FOR THE COMPLETE PROJECT, INCLUDING ALL CONSTRUCTION PHASES. ALL COMPLETION DATES SHALL BE WITHIN THE PERIOD REQUIRED BY THE CONTRACT FOR COMPLETION OF THE PROJECT. THIS COMPLETE DURATION PROJECT SCHEDULE MUST BE FULLY RESOURCE LOADED. THE GENERAL CONTRACTOR SHALL PROVIDE A PRESENTATION WHERE THE SCHEDULE'S ACTIVITIES AND LOGIC ARE FULLY EXPLAINED.
   d. WITHIN 15 CALENDAR DAYS AFTER RECEIPT OF THE COMPLETE CRITICAL PATH METHOD NETWORK DIAGRAM, ASSET MANAGEMENT AND THE GENERAL CONTRACTOR SHALL MEET WITH THE DESIGNER AND THEIR CONSULTANT ENGINEERS AND SUBCONTRACTORS, AND THE PROJECT SCHEDULER, FOR JOINT

REVIEW(S), CORRECTION, OR ADJUSTMENT OF THE PROPOSED PLAN AND SCHEDULE(S). WITHIN 10 CALENDAR DAYS AFTER THE JOINT REVIEW(S), THE GENERAL CONTRACTOR SHALL REVISE THE PROPOSED CPM NETWORK DIAGRAM IN ACCORDANCE WITH AGREEMENTS REACHED DURING THE JOINT REVIEW(S) AND SHALL FURNISH TWO COPIES OF THE DIAGRAM AS DEFINED HEREINAFTER (IN PARA. 1.5.3), TO THE ASSET MANAGEMENT AND ONE COPY TO THE DESIGNER. THIS CPM NETWORK DIAGRAM, AS REVISED AT THE JOINT REVIEW, IS THE PROJECT SCHEDULE (AND SHALL BE THE TARGET SCHEDULE TO WHICH ALL FUTURE CHANGES ARE COMPARED) UNTIL SUBSEQUENTLY REVISED IN ACCORDANCE WITH THE LOGIC UPDATE REQUIREMENTS STATED HEREINAFTER (IN PARA. 1.5.4). ALL APPROPRIATE SUBCONTRACTORS SHALL ALSO BE FURNISHED COPIES OF THE TIME SCALED NETWORK DIAGRAM.

e. UNTIL THE JOINT REVIEW(S) AND SUBSEQUENT ISSUANCE OF THE COMPLETE PROJECT SCHEDULE, AS DEFINED HEREINBEFORE, THE ESTABLISHMENT OF THE PRIMAVERA DATABASE, ALL PAYMENT REQUISITION SCHEDULE OF VALUES AND GENERAL CONTRACTOR PAYMENT FORMS MAY BE PRODUCED MANUALLY.

2. CRITICAL PATH METHOD (CPM) SCHEDULING REQUIREMENTS

a. THE CRITICAL PATH METHOD (CPM) SCHEDULE SHALL SHOW THE SEQUENCE AND INTERDEPENDENCE OF ACTIVITIES REQUIRED AND SHALL REFLECT THE MANNER IN WHICH ACTUAL WORK WILL BE PERFORMED. THE NUMBER OF ACTIVITIES SHOWN ON THE CRITICAL PATH SCHEDULE MUST BE AT LEAST EQUAL AND RELATED TO THE NUMBER OF ITEMS LISTED IN THE SCHEDULE OF VALUES, HOWEVER THE GENERAL CONTRACTOR MUST SUBMIT A DETAILED EXPLANATION THAT IDENTIFIES WHAT EACH ACTIVITY INCLUDES. IN PREPARING THE CRITICAL PATH SCHEDULE, THE GENERAL CONTRACTOR SHALL BREAK UP THE WORK INTO ACTIVITIES NOT EXCEEDING TWO CALENDAR MONTHS EACH, EXCEPT AS TO NON-CONSTRUCTION ACTIVITIES (I.E., DESIGN, PROCUREMENT OF MATERIALS AND DELIVERY OF EQUIPMENT) AND ANY OTHER ACTIVITIES FOR WHICH ASSET MANAGEMENT MAY APPROVE THE SHOWING OF LONGER DURATION. THE SCHEDULE SHALL SHOW NOT ONLY THE ACTIVITIES FOR ACTUAL DESIGN AND CONSTRUCTION WORK FOR EACH SUBCONTRACTOR CATEGORY OF THE PROJECT BUT ALSO ACTIVITIES ON WHICH THE WORK IS DEPENDENT (I.E., SUCH AS THE SUBMITTAL OF SHOP DRAWINGS, EQUIPMENT SCHEDULES, SAMPLES, COLOR SUBMISSION, COORDINATION DRAWINGS, TEMPLATES, FABRICATION, MATERIAL DELIVERY TIMES, DESIGNER/ASSET MANAGEMENT REVIEW AND APPROVAL OF DESIGN DOCUMENTS AND SHOP DRAWINGS, EQUIPMENT SCHEDULES, SAMPLES AND TEMPLATES, AND THE DELIVERY OF OWNER FURNISHED EQUIPMENT). IN ADDITION, THE COMPLETE DURATION PROJECT SCHEDULE SUBMISSION THAT IS TO BE MADE 60 CALENDAR DAYS AFTER RECEIPT OF THE ASSET MANAGEMENT NOTICE TO PROCEED WITH CONSTRUCTION SHALL BE RESOURCE LOADED WITH COSTS, MANPOWER (LABOR BY CRAFT OR SUBCONTRACTOR), AND EQUIPMENT FOR ALL ON-SITE CONSTRUCTION ACTIVITIES SHOWN ON THE SCHEDULE. ALL ACTIVITIES SHALL BE LOGICALLY TIED TO ONE COMMON END DATE. THE NUMBER OF CONSTRUCTION ACTIVITIES SHOWN ON THE CRITICAL PATH SCHEDULE SHALL BE CAPABLE OF BEING SUMMARIZED TO A LEVEL EQUIVALENT TO THE INDIVIDUAL SPECIFICATION SECTIONS, FOR WHICH ANY ITEM OF WORK IS BEING PERFORMED (DEFINED HEREINAFTER IN PARA. 1.5.2.B). TO THE EXTENT THAT THE CRITICAL PATH SCHEDULE SHOWS ANYTHING NOT JOINTLY AGREED UPON, OR FAILS TO SHOW ANYTHING JOINTLY AGREED UPON, IT SHALL NOT BE DEEMED TO HAVE BEEN ACCEPTED BY ASSET MANAGEMENT. FAILURE TO INCLUDE ANY ELEMENT OF WORK REQUIRED FOR THE PERFORMANCE OF THE CONTRACT SHALL NOT EXCUSE THE GENERAL CONTRACTOR FROM COMPLETING ALL WORK REQUIRED WITHIN ANY APPLICABLE COMPLETION DATE, NOTWITHSTANDING ASSET MANAGEMENT ACCEPTANCE OF THE CRITICAL PATH SCHEDULE.

b. THE BASELINE DATA TO BE ENTERED FOR EACH INDIVIDUAL ACTIVITY SHALL INCLUDE THE DURATION, ACTIVITY TYPE, ACTIVITY CODES, WORK BREAKDOWN STRUCTURE, DATE CONSTRAINTS, COST, RESOURCES, CUSTOM DATA ITEMS, PREDECESSOR ACTIVITY, AND SUCCESSOR ACTIVITY.

1) CRITICAL PATH METHOD (CPM) SCHEDULING SHALL BE CARRIED AS A SPECIFIC PAY ITEM ON THE SCHEDULE OF VALUES.

2) EACH ACTIVITY SHALL BE ASSIGNED A WORK BREAKDOWN STRUCTURE (WBS) CODE. THE WBS IS TO BE STRUCTURED IN LEVELS OF DELIVERABLE WORK ELEMENTS BEGINNING WITH THE END RESULT (LEVEL 1), AND THEN

DIVIDED INTO IDENTIFIABLE DELIVERABLE WORK ELEMENTS (LEVEL 2, 3, 4, ETC.). THE ASSET MANAGEMENT PROJECT MANAGER, DESIGNER AND GENERAL CONTRACTOR WILL MEET TO ESTABLISH A WBS SPECIFIC TO THE PROJECT.

3) EACH ACTIVITY SHALL BE ASSIGNED ACTIVITY CODES. THE ACTIVITY CODES SHALL IDENTIFY SPECIFIC GROUPS SUCH AS RESPONSIBILITY, PHASE, SYSTEM, LOCATION, CSI DIVISION, SPECIFICATION SECTION, AND CORRESPONDING SCHEDULE OF VALUES ID. THIS IS NOT A COMPLETE LIST. THE ASSET MANAGEMENT PROJECT MANAGER, DESIGNER AND GENERAL CONTRACTOR WILL MEET TO ESTABLISH ACTIVITY CODES SPECIFIC TO THE PROJECT.

3. CRITICAL PATH SUBMISSION REQUIREMENTS (CPM NETWORK DIAGRAM ELEMENTS)

a. AS A MINIMUM, THE GENERAL CONTRACTOR SHALL FURNISH, MONTHLY WITH EACH CRITICAL PATH SUBMISSION, AND EACH REVISION THEREOF REQUIRED IN THE LOGIC UPDATE, THREE (3) COPIES OF THE FOLLOWING PRIMAVERA OUTPUT REPORTS (WHICH SHALL SHOW EARLY START, EARLY FINISH, LATE START, LATE FINISH AND TOTAL FLOAT):

1) CURRENT SCHEDULE COMPARISON TO TARGET SCHEDULE
2) NETWORK LOGIC: DETAILED PRECEDENCE ANALYSIS
3) ACTIVITY INPUT LISTING SORTED BY WBS OR ACTIVITY CODES, PER ASSET MANAGEMENT PROJECT MANAGER
4) SCHEDULE SORT BY EARLY START AND TOTAL FLOAT
5) ACTUAL CASH, MANPOWER AND EQUIPMENT FLOWS (ON SCHEDULE - MONTHLY; LATE SCHEDULE - WEEKLY)

b. AS A MINIMUM, THE FOLLOWING COMPUTER-PRODUCED PRIMAVERA GRAPHIC REPORTS SHALL BE SUPPLIED WITH EACH CRITICAL PATH SUBMISSION AND REVISION THERETO (WHICH SHALL SHOW EARLY START, EARLY FINISH, LATE START, LATE FINISH AND TOTAL FLOAT):

1) GANTT CHART SORTED BY EARLY START DATE AND WBS OR ACTIVITY CODES, PER ASSET MANAGEMENT PROJECT MANAGER
2) BAR CHART - TWO WEEK LOOK AHEAD SORTED BY WBS OR ACTIVITY CODES, PER ASSET MANAGEMENT PROJECT MANAGER (AND NARRATIVE FORMAT IF REQUESTED BY THE ASSET MANAGEMENT PROJECT MANAGER, AT NO ADDITIONAL COST). A TWO-WEEK LOOK AHEAD SCHEDULE, GENERATED FROM THE PROJECT SCHEDULE, SHALL BE SUBMITTED FOR REVIEW AND DISCUSSION AT THE WEEKLY PROJECT MEETING.
3) TIME SCALED NETWORK DIAGRAM (PERTVIEW) SORTED BY WBS OR ACTIVITY CODES, PER ASSET MANAGEMENT PROJECT MANAGER
4) CASH, MANPOWER AND EQUIPMENT FLOWS (MONTHLY AND CUMULATIVE)

c. PAYMENT REQUISITION SCHEDULE OF VALUES (CSI FORMATTED) AND GENERAL CONTRACTOR PAYMENT FORM, TO BE PRODUCED MONTHLY THROUGH CUSTOM SOFTWARE WHICH USES THE PRIMAVERA DATABASE PERCENTAGE COMPLETE TO CALCULATE PAYMENT OWED TO GENERAL CONTRACTOR.

d. PRIMAVERA DATABASE: THE COMPLETE PRIMAVERA DATABASE FOR THE PROJECT SHALL BE SUBMITTED MONTHLY WITH EACH CRITICAL PATH SUBMISSION ON A FLOPPY DISK OR AS OTHERWISE REQUESTED BY ASSET MANAGEMENT.

e. MATERIAL/SUPPLIES SCHEDULE: AS A MINIMUM, A FULL LIST OF ALL MATERIALS REQUIRED FOR THE PROJECT SHALL BE LISTED. THIS LIST SHALL INCLUDE CODED SUB-LISTS (PER PARA. 1.5.7) RELATING TO THE ACTIVITY CODES OF THE CRITICAL PATH METHOD SCHEDULE. THE MATERIAL/SUPPLIES SCHEDULE SUB-LISTS SHALL BE REQUIRED WHICH LIST ALL MATERIALS REQUIRED FOR CRITICAL ACTIVITIES, ALL ITEMS OF LONG LEAD TIME NATURE (I.E., TRANSFORMERS, PLANTINGS, WINDOWS, DOORS AND FRAMES, ELECTRICAL AND MECHANICAL EQUIPMENT, ETC.), ALL PRE-PURCHASE ITEMS AND ALL OWNER-FURNISHED ITEMS. THE SCHEDULE SHALL PROVIDE NAMES, ADDRESSES, TELEPHONE NUMBERS OF SUPPLIERS, KEY SUPPLIERS' CONTACT PERSON, ORDER PLACEMENT DATA, ORDER CONFIRMATION DATA, PROPOSED ARRIVAL DATE, ACTUAL ARRIVAL DATE AND ALL OTHER PERTINENT INFORMATION. THIS CRITICAL MATERIALS/SUPPLIES SCHEDULE AND ITS ASSOCIATED SUB-LISTS SHALL BE UPDATED AS DIRECTED BY THE ASSET MANAGEMENT AND AS A MINIMUM AT EACH LOGIC UPDATE PERIOD.

f. UTILITIES SCHEDULE: AS A MINIMUM, A FULL LIST OF ALL UTILITIES REQUIRED FOR THE PROJECT SHALL BE LISTED. THE LIST SHALL INCLUDE CODES THAT

RELATE TO THE ACTIVITY CODE OF THE CRITICAL PATH SCHEDULE WHERE APPROPRIATE. THE LIST SHALL INCLUDE TYPE OF UTILITY, USAGE LEVELS REQUIRED, AND TIMING OF REQUIREMENTS.

g. EQUIPMENT SCHEDULE: AS A MINIMUM, A FULL LIST OF ALL EQUIPMENT REQUIRED FOR THE PROJECT SHALL BE LISTED. THE LIST SHALL INCLUDE CODES THAT RELATE TO THE ACTIVITY CODE OF THE CRITICAL PATH SCHEDULE WHERE APPROPRIATE. THE LIST SHALL INCLUDE TYPE OF EQUIPMENT, USAGE LEVELS REQUIRED, AND TIMING OF REQUIREMENTS.

4. CRITICAL PATH PROGRESS REPORTING AND CHANGES (PROGRESS AND LOGIC UPDATE)

a. THE GENERAL CONTRACTOR SHALL PROVIDE A COMPLETE PROGRESS AND LOGIC UPDATE MONTHLY. THE PROGRESS AND LOGIC UPDATE SHALL INCLUDE COMPLETE UPDATING OF THE SCHEDULE PROGRESS PER ACTIVITY --- BOTH AMOUNT PAID AND AMOUNT REMAINING. ACTUAL COST AMOUNT PAID AND AMOUNT REMAINING SHALL AGREE WITH THE PAYMENT REQUISITION FORMS REQUIRED HEREINBEFORE (IN SUB-PARAGRAPH 1.5.3.C.). THE REQUIREMENTS FOR SCHEDULE PROGRESS REPORTING ARE FURTHER SPECIFIED HEREINAFTER. A FULL CRITICAL PATH SUBMISSION WILL BE REQUIRED AT EACH PROGRESS AND LOGIC UPDATE.

b. IN ADDITION TO THE PROGRESS AND LOGIC UPDATE REQUIREMENTS, THE GENERAL CONTRACTOR SHALL PREPARE AND SUBMIT TO ASSET MANAGEMENT A REVISED CRITICAL PATH SUBMISSION SHOWING ALL CHANGES IN NETWORK LOGIC, INCLUDING BUT NOT LIMITED TO CHANGES IN ACTIVITY DURATION, AND REVISED ACTIVITY COSTS AS A RESULT OF CONTRACT CHANGES IN ACTIVITY SEQUENCE AND ANY CHANGES IN CONTRACT COMPLETION DATES WHICH HAVE BEEN MADE PURSUANT TO THE PROVISIONS OF THE CONTRACT FOR ADJUSTMENT OF CONTRACT COMPLETION TIME, SINCE THE LAST REVISION OF THE CRITICAL PATH SCHEDULE. THE CONTRACT COMPLETION DATE OR DATES SHALL BE ADJUSTED TO REFLECT TIME EXTENSIONS GRANTED ON THE ACTIVITIES IN ACCORDANCE WITH THE CONTRACT. THE CONTRACT COMPLETION DATE OR DATES SHALL REMAIN CONSTANT WHEN DATA IN REGARDS TO ACTUAL PROGRESS (ACTIVITY START, ACTIVITY COMPLETION, PERCENT COMPLETED, ETC.) ARE ENTERED AND DELAY SHOWS A NEGATIVE FLOAT/SLACK. WHERE ASSET MANAGEMENT HAS NOT YET MADE A FINAL DETERMINATION, AS TO THE AMOUNT OF TIME EXTENSION TO BE GRANTED AND THE PARTIES ARE UNABLE TO AGREE AS TO THE AMOUNT OF THE EXTENSION TO BE REFLECTED IN THE CRITICAL PATH SCHEDULE, THE GENERAL CONTRACTOR SHALL REFLECT THAT AMOUNT OF TIME EXTENSION IN THE CRITICAL PATH SCHEDULE AS ASSET MANAGEMENT MAY DETERMINE IN THEIR BEST JUDGMENT, TO BE APPROPRIATE FOR SUCH INTERIM PURPOSE. IT IS UNDERSTOOD AND AGREED THAT ANY SUCH INTERIM DETERMINATION BY ASSET MANAGEMENT FOR THE PURPOSES OF THIS PARAGRAPH SHALL NOT BE BINDING UPON EITHER PARTY FOR ANY OTHER PURPOSE AND THAT, AFTER ASSET MANAGEMENT HAS MADE FINAL DETERMINATION AS TO ANY TIME EXTENSION, THE GENERAL CONTRACTOR WILL REVISE THE CRITICAL PATH SCHEDULE PREPARED THEREAFTER IN ACCORDANCE WITH THE FINAL DECISION, IN ACCORDANCE WITH THE CONTRACT.

c. PRIOR TO THE DATE SPECIFIED BY ASSET MANAGEMENT FOR SUBMISSION OF THE LOGIC UPDATE (I.E., AT EACH GENERAL CONTRACTOR PENCIL MONTHLY PAYMENT REQUISITION, ONE WEEK PRIOR TO THE APPROVAL OF THE GENERAL CONTRACTOR MONTHLY PAYMENT REQUISITION), THE PROJECT SCHEDULER, INCLUDING INPUT FROM GENERAL CONTRACTOR, SUBCONTRACTORS, AND THE DESIGNER, SHALL UPDATE THE COMPUTER-PRODUCED SCHEDULE AND DIAGRAMS. THE UPDATE SHALL SHOW ACTUAL PROGRESS AND PERCENT COMPLETED OF ACTIVITIES IN PROGRESS, IDENTIFY THOSE ACTIVITIES STARTED AND THOSE COMPLETED DURING THE PREVIOUS LOGIC UPDATE PERIOD, SHOW THE ESTIMATED TIME REQUIRED TO COMPLETE EACH ACTIVITY STARTED BUT NOT YET COMPLETED, AND REFLECT ANY CHANGES IN THE CRITICAL PATH SCHEDULE APPROVED IN ACCORDANCE WITH THE CRITICAL PATH SCHEDULING REQUIREMENTS AND PROGRESS AND LOGIC UPDATE PARAGRAPHS OF THIS SECTION (PARA. 1.5.2 AND 1.5.4). ACTUAL PROGRESS TO-DATE SHALL BE ENTERED BY INPUTTING ACTUAL START DATE AND REMAINING DURATION (OR EARLY FINISH) FOR EACH ACTIVITY WHICH HAS EITHER STARTED DURING THE MONTHLY UPDATE PERIOD OR IS ONGOING. IN ADDITION TO ENTERING REMAINING DURATION, THE PERCENT COMPLETE SHALL BE ENTERED FOR THAT ACTIVITY. HOWEVER, PERCENT COMPLETE CALCULATION SHALL BE SET TO

MANUAL USING THE PROJECT DEFAULT SCREEN. AFTER COMPLETION OF THE REVIEW AND ASSET MANAGEMENT APPROVAL OF ALL ENTRIES, THE GENERAL CONTRACTOR SHALL SUBMIT AN UPDATED CRITICAL PATH SUBMISSION, IN THE DETAIL SPECIFIED IN THE CRITICAL PATH SUBMISSION REQUIREMENTS OF THIS SECTION (PARA. 1.5.3), TO ASSET MANAGEMENT, NO LATER THAN THE CLOSE OF BUSINESS ON THE DATE SPECIFIED BY ASSET MANAGEMENT FOR SUBMISSION OF EDITED GENERAL CONTRACTOR MONTHLY PAYMENT REQUISITION (NORMALLY ONE WEEK AFTER PENCIL MONTHLY PAYMENT REQUISITION REVIEW).

d. THE GENERAL CONTRACTOR SHALL ASSUME THAT THE FULL DURATION OF THE CONTRACT WILL BE REQUIRED TO COMPLETE THE WORK OF THE CONTRACT. POSITIVE FLOAT/SLACK BELONGS TO THE PROJECT AND MUST BE USED IN THE BEST INTEREST OF COMPLETING THE PROJECT ON TIME IN THE EVENT DEPARTURE FROM THE NETWORK OCCURS. IF NEGATIVE FLOAT/SLACK IS INDICATED ON THE SCHEDULE, RECOVERY SCHEDULES SHALL BE PREPARED BY THE GENERAL CONTRACTOR AT NO ADDITIONAL COST TO THE COMMONWEALTH, INDICATING HOW THE WORK WILL BE EXPEDITED TO MEET CURRENT CONTRACT COMPLETION DATES. THE GENERAL CONTRACTOR'S CONSTRUCTION SCHEDULE SHALL BEGIN WITH THE DATE OF ISSUANCE OF THE ASSET MANAGEMENT NOTICE TO PROCEED AND CONCLUDE WITH THE CONTRACT DATE OF FINAL COMPLETION OF THE PROJECT. FLOAT OR SLACK TIME WITHIN THE CONSTRUCTION SCHEDULE IS NOT FOR THE EXCLUSIVE USE OR BENEFIT OF EITHER THE COMMONWEALTH OR THE GENERAL CONTRACTOR, BUT IS A JOINTLY OWNED, EXPIRING PROJECT RESOURCE AVAILABLE TO BOTH PARTIES AS NEEDED TO MEET CONTRACT MILESTONES AND THE CONTRACT COMPLETION DATE. THEREFORE, ANY EXISTING FLOAT SHALL BE USED TO THE MAXIMUM EXTENT POSSIBLE TO OFFSET:
   1) UNEXPECTED DELAYS WHICH OCCUR IN CONNECTION WITH THE GENERAL CONTRACTOR'S WORK; AND
   2) CONTRACT CHANGE ACTIONS INITIATED BY THE PARTIES SPECIFIED IN THE CONTRACT (I.E., CHANGES IN THE WORK).

e. WHERE DELAYS ARE INCURRED, THE GENERAL CONTRACTOR SHALL PROVIDE THROUGH WEEKLY AND/OR FULL LOGIC CPM UPDATE HOW THE WORK DELAY CAN BE RETURNED TO THE APPROVED SCHEDULE. THE GENERAL CONTRACTOR AGREES THAT WHENEVER IT BECOMES APPARENT FROM THE CURRENT WEEKLY COMPUTER PRODUCED CALENDAR-DATED SCHEDULE THAT THE CONTRACT COMPLETION DATE WILL NOT BE MET, HE/SHE WILL TAKE SOME OR ALL OF THE FOLLOWING ACTIONS AT NO ADDITIONAL COST TO THE COMMONWEALTH:
   1) INCREASE DESIGN REVIEW AND/OR CONSTRUCTION MANPOWER AND/OR EQUIPMENT IN SUCH QUANTITIES AND CRAFTS AS WILL SUBSTANTIALLY ELIMINATE, IN THE JUDGMENT OF THE ASSET MANAGEMENT, THE BACKLOG OF WORK AND ANY IMPACT ON THE CONSTRUCTION ACTIVITIES.
   2) INCREASE THE NUMBER OF WORKING HOURS PER SHIFT, SHIFTS PER WORKING DAY, WORKING DAYS PER WEEK, OR THE AMOUNT OF CONSTRUCTION EQUIPMENT, OR ANY COMBINATION OF THE FOREGOING, SUFFICIENTLY TO SUBSTANTIALLY ELIMINATE, IN THE JUDGMENT OF THE ASSET MANAGEMENT, THE BACKLOG OF WORK.
   3) RESCHEDULE ACTIVITIES TO ACHIEVE MAXIMUM PRACTICAL CONCURRENCE OF ACCOMPLISHMENT OF ACTIVITIES.

f. FLOAT SHALL BE USED AS IT OCCURS (TIME EXTENSION GRANTED OR JOB DELAY). IF A TIME EXTENSION AND JOB DELAY OCCURS IN THE SAME LOGIC UPDATE PERIOD (NORMALLY WEEKLY), THE DELAY WILL BE ENTERED IN THE NETWORK FIRST.

g. IN ADDITION TO THE FOREGOING, THE GENERAL CONTRACTOR SHALL SUBMIT A NARRATIVE REPORT EVERY OTHER WEEK (BI-WEEKLY) AND AT THE SAME TIME AS THE UPDATED SCHEDULE REQUIRED BY THE PRECEDING PARAGRAPHS IN A FORM AGREED UPON BY THE ASSET MANAGEMENT. THE NARRATIVE REPORT SHALL INCLUDE A DESCRIPTION OF PROBLEM AREAS, CURRENT AND ANTICIPATED DELAYING FACTORS AND THEIR ESTIMATED IMPACT ON PERFORMANCE OF OTHER ACTIVITIES AND COMPLETION DATES, AND AN EXPLANATION OF CORRECTIVE ACTION TAKEN OR PROPOSED.

h. THE ASSET MANAGEMENT SHALL HAVE THE RIGHT TO REQUIRE THE GENERAL CONTRACTOR TO FURNISH ADDITIONAL PRINTOUTS OF LOGIC UPDATED SCHEDULES AND TIME SCALED NETWORK DIAGRAMS, REFLECTING ACTUAL OR ESTIMATED TIME CHANGES RESULTING FROM UNEXPECTED DELAYS, CHANGE ORDERS, STRIKES, ETC., AT NO ADDITIONAL COST TO THE COMMONWEALTH.

5. PROGRESS PAYMENTS TO GENERAL CONTRACTOR
   a. THE MONTHLY CRITICAL PATH SUBMISSION SHALL BE AN INTEGRAL PART AND BASIC ELEMENT OF THE ESTIMATE UPON WHICH PROGRESS PAYMENTS SHALL BE MADE. THE GENERAL CONTRACTOR SHALL BE ENTITLED TO PROGRESS PAYMENT ONLY UPON APPROVAL OF ESTIMATES AS DETERMINED FROM THE CURRENTLY APPROVED UPDATED COMPUTER-PRODUCED CRITICAL PATH SCHEDULE. PAYMENTS WILL BE MADE AGAINST ACTIVITY ITEMS SHOWN ON THE COMPUTER-PRODUCED SCHEDULE AND AS REFLECTED ON ASSET MANAGEMENT APPROVED FORMAT PAYMENT FORMS WHICH SHALL BE USED IN CONJUNCTION WITH PRIMAVERA. THE GENERAL CONTRACTOR SHALL PRODUCE THE SCHEDULE OF VALUES AND THE STANDARD PAYMENT FORMS BY FOLLOWING THE GUIDELINES OF ASSET MANAGEMENT STAFF. THIS SHALL INCLUDE ENTERING THE NET AMOUNT PAID TO SUBCONTRACTORS AGAINST THE APPROPRIATE ACTIVITIES.
   b. WHEREAS EVERY SCHEDULE ACTIVITY IS COST LOADED, AS WELL AS MANPOWER AND EQUIPMENT LOADED (I.E., THE SCHEDULE OF PAYMENT VALUES LISTS ALL SCHEDULE ACTIVITIES, AT THE END OF EVERY MONTH THE GENERAL CONTRACTOR'S PAYMENT APPLICATION IS A LISTING OF ALL SCHEDULE ACTIVITIES STARTED AND COMPLETED, THE PERCENTAGE OF WORK ACCOMPLISHED, AND A CALCULATION OF THE VALUE OF THE WORK PERFORMED), BUT THE COMMONWEALTH IS REQUIRED TO PAY FOR WORK PERFORMED WITHIN A MANDATED TIME FRAME, THE SUBMITTAL OF THE SCHEDULE UPDATE IS NOT A "CONDITION PRECEDENT" TO MONTHLY PROGRESS PAYMENTS; HOWEVER, IN THE EVENT THE GENERAL CONTRACTOR FAILS TO SUBMIT A COMPUTER-PRODUCED CALENDAR-DATED SCHEDULE OR THE INITIAL OR REVISED TIME SCALED NETWORK DIAGRAM ON THE DATE DESIGNATED BY ASSET MANAGEMENT, ASSET MANAGEMENT SHALL HAVE THE RIGHT, AFTER GIVING WRITTEN NOTICE TO THE GENERAL CONTRACTOR, TO HAVE THE COMPUTER-PRODUCED CALENDAR-DATED SCHEDULE OR TIME SCALED NETWORK DIAGRAM PREPARED OR REVISED (AS APPLICABLE) BY SEPARATE COMPUTER CONTRACT AWARD OR OTHERWISE AND TO DEDUCT THE COST THEREOF FROM THE CONTRACT AMOUNT THROUGH THE PROGRESS PAYMENT WHICH BECOMES DUE UPON COMPLETION THEREOF AND UPON APPROVAL OF ASSET MANAGEMENT OF THE PAYMENT REQUEST. IF, HOWEVER, THE GENERAL CONTRACTOR FAILS OR REFUSES TO FURNISH THE INFORMATION AND DATA WHICH, IN THE JUDGMENT OF THE ASSET MANAGEMENT PROJECT MANAGER, ARE NECESSARY FOR PREPARATION OR REVISION OF THE COMPUTER-PRODUCED CALENDAR-DATED SCHEDULE OR TIME SCALED NETWORK DIAGRAM BY SEPARATE CONTRACT OR OTHERWISE, AFTER SEVEN [7] CALENDAR DAYS WRITTEN NOTICE, THE SCHEDULE REQUIREMENT TERMS OF THE CONTRACT MAY BE CONSIDERED TO HAVE BEEN BREACHED BY THE GENERAL CONTRACTOR, AND ASSET MANAGEMENT MAY TAKE ANY OR ALL OF THE FOLLOWING ADDITIONAL ACTIONS:
      1) IMPOSE LACK-OF-SCHEDULE DAMAGES (SEPARATE AND DISTINCT FROM LIQUIDATED DAMAGES), AT A COST OF $ 300 PER DAY FOR EVERY DAY THE SCHEDULE SUBMITTAL IS LATE.
      2) TERMINATE THE CONTRACT WITH PREJUDICE (PER **ARTICLE XVII** OF THE CONTRACT).
6. ADJUSTMENT OF CRITICAL PATH CONTRACT COMPLETION TIME
   a. THE CONTRACT COMPLETION TIME OR CONTRACT COST WILL AND IN GENERAL BE ADJUSTED ONLY FOR CHANGE ORDERS APPROVED BY ASSET MANAGEMENT AS OUTLINED IN THE CONTRACT. IN THE EVENT THE GENERAL CONTRACTOR REQUESTS AN EXTENSION OF ANY CONTRACT COMPLETION DATE OR COST INCREASE HE/SHE SHALL FURNISH SUCH JUSTIFICATION AND SUPPORTING EVIDENCE AS ASSET MANAGEMENT MAY DEEM NECESSARY FOR THE DETERMINATIONS TO WHETHER THE GENERAL CONTRACTOR IS ENTITLED TO AN EXTENSION OF TIME OR CONTRACT COST ADJUSTMENT UNDER THE PROVISIONS OF THIS CONTRACT. ASSET MANAGEMENT APPROVAL AS TO THE TOTAL NUMBER OF DAYS EXTENSION AND/OR INCREASE IN CONTRACT VALUE SHALL BE BASED UPON THE CURRENTLY ACCEPTED COMPUTER-PRODUCED CRITICAL PATH SCHEDULE AND ON ALL DATA RELEVANT TO THE EXTENSION. A REQUEST FOR AN EXTENSION OF TIME, ASSOCIATED WITH THE CHANGE ORDERS WILL NOT BE CONSIDERED UNLESS IT IS CLEARLY PROVEN THAT THE CRITICAL PATH HAS BEEN NEGATIVELY EFFECTED (SUCH AS, BUT NOT LIMITED TO, TIME IMPACT

ANALYSIS USING RESOURCE LOADED FRAGMENTARY NETWORKS TO DEMONSTRATE THE EFFECT OF DELAYS ON THE OVERALL PROJECT SCHEDULE). SUCH DATA SHALL BE INCLUDED AS AN ACTIVITY LINKED TO THE ACTIVITY WHICH IS BEING IMPACTED AND WILL APPEAR IN THE NEXT MONTHLY SCHEDULE AND LOGIC UPDATE. ALL EXTENSIONS FOR RELATED MANPOWER/EQUIPMENT INCREASES SHALL BE APPLIED TO THE APPROPRIATE EXISTING ACTIVITY ITEMS.

1) CONTRACT TIME CAN ONLY BE EXTENDED BY AUTHORIZED APPROVED CHANGE ORDER.

b. WHEREAS TIME IS OF THE ESSENCE IN THE PERFORMANCE OF WORK UNDER THE CONTRACT, EACH REQUEST FOR CHANGE IN ANY CONTRACT COMPLETION DATE SHALL BE SUBMITTED BY THE GENERAL CONTRACTOR TO ASSET MANAGEMENT AT THE TIME AN ALLEGED DELAY OCCURS. FAILURE TO NOTIFY ASSET MANAGEMENT OF ANY DELAY AS PROVIDED IN THE CONTRACT SHALL PRECLUDE THE GENERAL CONTRACTOR FROM SUBSEQUENTLY CLAIMING ANY DAMAGES DUE TO SAID DELAY.

c. FOR PURPOSES OF SCHEDULING, THE PROJECT WILL BE CONSIDERED TO BE SUBSTANTIALLY COMPLETE WHEN ALL WORK AFFECTING HEALTH, SAFETY AND FUNCTION IS TOTALLY COMPLETED, AND WITH LESS THAN ONE [1] PERCENT OF THE BASE CONTRACT VALUE REMAINING, AND READY FOR COMPLETE USE AND OCCUPANCY AS DETERMINED BY THE ASSET MANAGEMENT PROJECT MANAGER, THE OPERATING AGENCIES (INDIVIDUALLY OR COLLECTIVELY), AND THE DESIGNER. THEN THE USER AGENCIES (INDIVIDUALLY OR COLLECTIVELY) WILL TAKE CONTROL OF THEIR BUILDING AREA(S) AND BE RESPONSIBLE FOR OPERATING COSTS AND SECURITY. FINAL PUNCH LISTS WILL BE ESTABLISHED AND MONETIZED AT THIS TIME.

1) ASSET MANAGEMENT CERTIFICATE OF USE AND OCCUPANCY MUST BE ISSUED FOR PARTIAL USE AND OCCUPANCY, CONTINGENT UPON CONDITIONS SET FORTH BY THE BUILDING OFFICIAL HAVING JURISDICTION. THE MASSACHUSETTS DEPARTMENT OF PUBLIC SAFETY OCCUPANCY CERTIFICATE MUST BE ISSUED BY THE EFFECTIVE SUBSTANTIAL COMPLETION DATE.

2) THE GENERAL CONTRACTOR SHALL HAVE THE NUMBER OF CALENDAR DAYS STATED IN THE CONTRACT, FROM THE DATE OF THE ASSET MANAGEMENT NOTICE TO PROCEED, TO COMPLETE ALL THE WORK BEFORE SUBSTANTIAL COMPLETION IS ACHIEVED. IF THE GENERAL CONTRACTOR FAILS TO COMPLETE THE WORK WITHIN THE CONTRACT COMPLETION TIME FRAME SO STATED, THE GENERAL CONTRACTOR SHALL BE SUBJECT TO THE ASSESSMENT OF LIQUIDATED DAMAGES.

7. ADDITIONAL REQUIREMENTS:

a. A LIST IN EXCEL FORMAT AND THE ASSOCIATED DATABASE FILE, AS PRESCRIBED BY ASSET MANAGEMENT, OF EVERY SUBMITTAL OF SHOP DRAWINGS, PRODUCT DATA, SAMPLES AND OTHER SUBMITTALS REQUIRED BY THE CONTRACT, GENERAL CONDITIONS, SUPPLEMENTARY CONDITIONS AND/OR TECHNICAL SPECIFICATIONS OF THE CONSTRUCTION CONTRACT. THIS REQUIRED LIST SHALL BE SET UPON A TEMPLATE, BASED ON THE GENERAL CONTRACTOR'S WORK BREAKDOWN STRUCTURE (WBS) TO FACILITATE REPORTING, SHOWING THE FOLLOWING: SPECIFICATION SECTION, SUB-SECTION NUMBER, ITEM NUMBER, DESCRIPTION, SHOP DRAWING NUMBER, SUBMITTAL REVIEW AND APPROVAL, ACTUAL ORDER DATE, PROCUREMENT AND FABRICATION, SCHEDULE DELIVERY DATE, DATE RECEIVED, SCHEDULED INSTALLATION DATE AND ACTUAL INSTALLATION DATE.

b. A LIST IN EXCEL FORMAT AND THE ASSOCIATED DATABASE FILE, AS PRESCRIBED BY ASSET MANAGEMENT, OF EVERY LONG LEAD ITEM REQUIRED BY THE CONTRACT, GENERAL CONDITIONS, SUPPLEMENTARY CONDITIONS AND/OR TECHNICAL SPECIFICATIONS OF THE CONSTRUCTION CONTRACT. THIS REQUIRED LIST SHALL BE SET UPON A TEMPLATE, BASED ON THE GENERAL CONTRACTOR'S WORK BREAKDOWN STRUCTURE (WBS) TO FACILITATE REPORTING, SHOWING THE FOLLOWING: SPECIFICATION SECTION, SUB-SECTION NUMBER, ITEM NUMBER, DESCRIPTION, SHOP DRAWING NUMBER, SUBMITTAL REVIEW AND APPROVAL, ACTUAL ORDER DATE, PROCUREMENT AND FABRICATION, SCHEDULE DELIVERY DATE, DATE RECEIVED, SCHEDULED INSTALLATION DATE AND ACTUAL INSTALLATION DATE.

c. A LIST IN EXCEL FORMAT AND THE ASSOCIATED DATABASE FILE, AS PRESCRIBED BY ASSET MANAGEMENT, OF EVERY PRE-PURCHASE ITEM REQUIRED BY THE

CONTRACT, GENERAL CONDITIONS, SUPPLEMENTARY CONDITIONS AND/OR TECHNICAL SPECIFICATIONS OF THE CONSTRUCTION CONTRACT. THIS REQUIRED LIST SHALL BE SET UPON A TEMPLATE, BASED ON THE GENERAL CONTRACTOR'S WORK BREAKDOWN STRUCTURE (WBS) TO FACILITATE REPORTING, SHOWING THE FOLLOWING: SPECIFICATION SECTION, SUB-SECTION NUMBER, ITEM NUMBER, DESCRIPTION, SHOP DRAWING NUMBER, SUBMITTAL REVIEW AND APPROVAL, ACTUAL ORDER DATE, PROCUREMENT AND FABRICATION, SCHEDULE DELIVERY DATE, DATE RECEIVED, SCHEDULED INSTALLATION DATE AND ACTUAL INSTALLATION DATE.

d. A LIST IN EXCEL FORMAT AND THE ASSOCIATED DATABASE FILE, AS PRESCRIBED BY ASSET MANAGEMENT, OF EVERY OWNER-FURNISHED ITEM REQUIRED BY THE CONTRACT, GENERAL CONDITIONS, SUPPLEMENTARY CONDITIONS AND/OR TECHNICAL SPECIFICATIONS OF THE CONSTRUCTION CONTRACT. THIS REQUIRED LIST SHALL BE SET UPON A TEMPLATE, BASED ON THE GENERAL CONTRACTOR'S WORK BREAKDOWN STRUCTURE (WBS) TO FACILITATE REPORTING, SHOWING THE FOLLOWING: SPECIFICATION SECTION, SUB-SECTION NUMBER, ITEM NUMBER, DESCRIPTION, ACTUAL ORDER DATE, PROCUREMENT AND FABRICATION, SCHEDULE DELIVERY DATE, DATE RECEIVED, SCHEDULED INSTALLATION DATE AND ACTUAL INSTALLATION DATE. THE LIST OF OWNER-FURNISHED ITEMS SHALL CORRESPOND WITH THE CONSTRUCTION SCHEDULE SO THAT THE SUBMISSIONS RELATE TO THE TIME WHEN THE PRODUCTS AND/OR SYSTEMS WILL ACTUALLY BE REQUIRED ON THE SITE.
   1) DELIVERIES OF OWNER-FURNISHED EQUIPMENT OR MATERIALS SHALL BE SHOWN ON THE SCHEDULE WITH TIME WINDOWS TO BE PROVIDED BY THE COMMONWEALTH.
   2) NEITHER THE DESIGNER NOR THE COMMONWEALTH WILL BE RESPONSIBLE FOR ACCEPTANCE OF A LIST THAT CALLS FOR OUT-OF-SEQUENCE DELIVERY OF OWNER-FURNISHED ITEMS.

1.6 CRITICAL PATH METHOD SCHEDULER

A. THE GENERAL CONTRACTOR SHALL PROVIDE A FULL-TIME, INDEPENDENT, PROJECT-DEDICATED SCHEDULER WHO SHALL ATTEND ALL PROGRESS AND LOGIC UPDATE MEETINGS TO ADDRESS PROJECT PROGRESS, ALLEGED DELAYS AND COST OR TIME IMPACTS. THE NAME OF THE PROJECT SCHEDULER, TOGETHER WITH HIS QUALIFICATIONS, SHALL BE SUBMITTED TO THE DESIGNER AND ASSET MANAGEMENT PROJECT MANAGER FOR MUTUAL APPROVAL. THE PROJECT SCHEDULER SHALL HAVE A MINIMUM OF FIVE [5] YEARS OF PROJECT CPM SCHEDULING EXPERIENCE, THREE [3] YEARS OF WHICH SHALL BE ON PROJECTS OF SIMILAR SCOPE AND VALUE TO THIS PROJECT. REFERENCES SHALL BE PROVIDED FROM PAST PROJECTS THAT CAN ATTEST TO THE CAPABILITIES OF THE PROJECT SCHEDULER. A PROJECT SCHEDULER WHO THE ASSET MANAGEMENT PROJECT MANAGER DEEMS UNQUALIFIED, OR WHO ENGAGES IN "SCHEDULE GAMESMANSHIP" RATHER THAN CONSCIOUSLY AND ACCURATELY PORTRAYING PROGRESS OF THE WORK, WILL BE REPLACED AT NO ADDITIONAL COST TO THE COMMONWEALTH.

B. THE GENERAL CONDITIONS AND GENERAL REQUIREMENTS OF THE CONSTRUCTION CONTRACT APPLY TO THE GENERAL CONTRACTOR WITH REGARDS TO RESPONSIBILITY FOR THE SCHEDULING OF ALL SUBCONTRACTORS. THE PROJECT SCHEDULER SHALL ENSURE THE TOTAL AND COMPLETE SCHEDULING OF ALL WORK OF THE PROJECT AS SUCH WORK RELATES TO THE GENERAL CONTRACTOR'S WORK AND ALL SUBCONTRACTORS.

C. THE PURPOSE OF THE PROJECT SCHEDULER SHALL BE TO ACCURATELY PORTRAY ALL RELEVANT ACTIVITIES REQUIRED TO COMPLETE THE WORK ACCORDING TO THE CONTRACT DOCUMENTS, ORGANIZED IN A LOGICAL SEQUENCE AND, GENERALLY, TIME SCALED.

D. PREFERENTIAL SEQUENCING (I.E., WHEREBY ACTIVITIES THAT COULD BE PERFORMED CONCURRENTLY AND ARE ESTABLISHED IN THE PROJECT SCHEDULE AS SEQUENTIAL SIMPLY TO CONSUME FLOAT), AND/OR INDICATING ARTIFICIAL ACTIVITY DURATIONS (I.E., INFLATING ACTIVITIES IN THE SCHEDULE TO CONSUME FLOAT AND INFLUENCE THE CRITICAL PATH) ARE UNACCEPTABLE. THE PROJECT SCHEDULER WILL PROVIDE MONTHLY COMPARISONS OF THE START AND FINISH DATES WITH FIELD RECORDS OF ASSET MANAGEMENT INSPECTION STAFF, JOB PHOTOS, WEEKLY MEETING MINUTES, MONTHLY PROGRESS REPORTS, GENERAL

CONTRACTOR WEEKLY BAR CHARTS OR TWO-WEEK LOOK AHEAD SCHEDULES, AND ACCURATELY UPDATE THE SCHEDULE TO REFLECT ACTUAL JOB PROGRESS.

1. PURSUANT TO THE FLOAT-SHARING REQUIREMENTS OF THE CONTRACT DOCUMENTS, THE USE OF FLOAT SUPPRESSION TECHNIQUES (A.K.A., SEQUESTERING FLOAT) SUCH AS PREFERENTIAL SEQUENCING OR LOGIC, SPECIAL LEAD/LAG LOGIC RESTRAINTS, AND EXTENDED ACTIVITY TIMES ARE PROHIBITED, AND THE USE OF FLOAT TIME DISCLOSED OR IMPLIED BY THE USE OF ALTERNATE FLOAT SUPPRESSION TECHNIQUES SHALL BE SHARED TO THE PROPORTIONATE BENEFIT OF THE ASSET MANAGEMENT AND THE GENERAL CONTRACTOR.
2. SEQUESTERING OF FLOAT SHALL BE CAUSE FOR REJECTION OF THE GENERAL CONTRACTOR'S SCHEDULE SUBMITTAL. IN THE EVENT THAT FLOAT SEQUESTERING IS IDENTIFIED THE GENERAL CONTRACTOR, THROUGH THE PROJECT SCHEDULER, SHALL HAVE THE COMPUTER-PRODUCED CALENDAR-DATED SCHEDULE OR TIME SCALED NETWORK DIAGRAM REVISED APPROPRIATELY, AT NO ADDITIONAL COST TO THE COMMONWEALTH.

E. THE GENERAL CONTRACTOR, THROUGH THE PROJECT SCHEDULER, SHALL REQUIRE THE DESIGNER, ALL MAJOR SUBCONTRACTORS (INCLUDING, BUT NOT LIMITED TO, SITE WORK, MASONRY, STRUCTURAL STEEL, FIREPROOFING, ROOFING, ELEVATORS, MECHANICAL, PLUMBING, ELECTRICAL, AND ALL OTHER SUBCONTRACTORS WITH A SUBCONTRACT EQUAL TO OR IN EXCESS OF FIVE [5] PERCENT OF THE CONTRACT VALUE) TO PARTICIPATE IN AND SIGN OFF ON THE BASELINE SCHEDULE AND ALL SCHEDULE UPDATES. THE GENERAL CONTRACTOR MUST SUBMIT AN AS-BUILT CONSTRUCTION SCHEDULE (CERTIFIED BY THE GENERAL CONTRACTOR'S PROJECT MANAGER AND THE PROJECT SCHEDULER AS REPRESENTING THE WAY THE PROJECT WAS ACTUALLY CONSTRUCTED) AS A CONDITION PRECEDENT TO FINAL ACCEPTANCE.

PART 2 - PRODUCTS (NOT USED)

PART 3 - EXECUTION (NOT USED)

END OF SECTION

SECTION 013300

SUBMITTAL REQUIREMENTS

PART 1 - GENERAL

1.1 GENERAL PROVISIONS

A. ATTENTION IS DIRECTED TO THE CONTRACT AND GENERAL CONDITIONS AND ALL SECTIONS WITHIN DIVISION 01 - GENERAL REQUIREMENTS WHICH ARE HEREBY MADE A PART OF THIS SECTION OF THE SPECIFICATIONS.

1.2 REQUIREMENTS INCLUDED

A. SHOP DRAWINGS, PRODUCTS DATA, SAMPLES, SUBMITTAL LOGS (SHOP DRAWINGS AND SAMPLES, RFI, NOI, PCO, CO AND SK DRAWINGS), WEATHER PROTECTION (IF APPLICABLE) AND SCHEDULE OF VALUES.

1.3 SHOP DRAWINGS, PRODUCTS DATA, AND SAMPLES

A. GENERAL:

1. REVIEW AND SUBMIT TO THE DESIGNER AND WHERE OUTLINED BELOW TO THE DCAM PROJECT MANAGER, SHOP DRAWINGS, PROJECT DATA AND SAMPLES REQUIRED BY SPECIFICATIONS SECTIONS IN HARD AND ELECTRONIC COPIES.
2. NO SUBMISSIONS MADE BY FAX WILL BE ACCEPTED.
3. THE GENERAL CONTRACTOR, WITHIN THE TIME FRAME STATED IN SECTION 013200 – CONSTRUCTION PROGRESS DOCUMENTATION AFTER THE PRE-CONSTRUCTION MEETING, SHALL PREPARE AND SUBMIT FOR THE DESIGNER AND THE DCAM PROJECT MANAGER'S APPROVAL, A SCHEDULE OF SHOP DRAWINGS, PRODUCT DATA AND SAMPLES REQUIRED TO BE SUBMITTED FOR THE WORK. THE SCHEDULE SHALL INDICATE, BY SUBCONTRACTOR, THE DATE BY WHICH FINAL APPROVAL OF EACH ITEM MUST BE OBTAINED, AND SHALL BE REVISED AS REQUIRED BY CONDITIONS OF THE WORK, SUBJECT TO THE DCAM PROJECT MANAGER'S APPROVAL. THE SCHEDULE OF SHOP DRAWINGS, PRODUCT DATA AND SAMPLES SHALL CORRESPOND WITH THE CONSTRUCTION SCHEDULE SO THAT THE SUBMISSIONS RELATE TO THE TIME WHEN THE PRODUCTS AND/OR SYSTEMS WILL BE REQUIRED ON THE SITE. NEITHER THE DESIGNER NOR THE DCAM PROJECT MANAGER WILL APPROVE A SCHEDULE THAT CALLS FOR OUT-OF-SEQUENCE SUBMITTALS.

B. SHOP DRAWINGS:

1. ORIGINAL DRAWINGS SHALL BE PREPARED BY GENERAL CONTRACTOR, SUBCONTRACTOR, SUPPLIER OR DISTRIBUTOR, WHICH ILLUSTRATE SOME PORTION OF THE WORK, SHOWING FABRICATION, LAYOUT, SETTING, OR ERECTION OF DETAILS.
   a. SHOP DRAWINGS SHALL BE PREPARED BY A QUALIFIED DETAILER.
   b. DETAILS SHALL BE IDENTIFIED BY REFERENCE TO SHEET AND DETAIL NUMBERS INDICATED ON CONTRACT DRAWINGS.
   c. MAXIMUM SHEET SIZE SHALL BE 30-INCH BY 42-INCH.
   d. SUBMIT WITH THE REQUIRED NUMBER OF OPAQUE PRINTS SPECIFIED AND ELECTRONIC MEDIA HEREIN.

C. PRODUCT DATA:

1. MANUFACTURERS' CATALOG SHEETS, BROCHURES, DIAGRAMS, SCHEDULES, PERFORMANCE CHARTS, ILLUSTRATIONS, AND OTHER STANDARD DESCRIPTIVE DATA. PROVIDE MANUFACTURER'S CATALOGUE SHEET, SPECIFICATION FOR EACH PRODUCT AND OTHER PERTINENT DATA AS REQUIRED UNDER THE INDIVIDUAL SPECIFICATION.
   a. MODIFY PRODUCT DATA SUBMITTALS TO DELETE INFORMATION WHICH IS NOT APPLICABLE TO THE PROJECT.
   b. SUPPLEMENT STANDARD INFORMATION TO PROVIDE ADDITIONAL INFORMATION APPLICABLE TO THE PROJECT.
   c. CLEARLY MARK EACH COPY TO IDENTIFY PERTINENT MATERIALS, PRODUCTS, OR MODELS.
   d. SHOW DIMENSIONS AND CLEARANCES REQUIRED.
   e. SHOW PERFORMANCE CHARACTERISTICS AND CAPACITIES.
   f. SHOW WIRING DIAGRAMS AND CONTROLS.
2. ALL SUCH DATA SHALL BE SPECIFIC AND IDENTIFICATION OF MATERIAL OR EQUIPMENT SUBMITTED SHALL BE CLEARLY MADE IN INK. DATA OF GENERAL NATURE WILL NOT BE ACCEPTED.
3. PRODUCT DATA SHALL BE ACCOMPANIED BY TRANSMITTAL NOTICE. THE GENERAL CONTRACTOR'S STAMP OF APPROVAL SHALL APPEAR ON THE PRINTED INFORMATION ITSELF.
4. SUBMIT THE INFORMATION LISTED ABOVE IN BOTH HARD AND ELECTRONIC FORMAT.

D. SAMPLES:

1. PHYSICAL SAMPLES SHALL ILLUSTRATE MATERIALS, EQUIPMENT, OR WORKMANSHIP, AND SHALL ESTABLISH STANDARDS BY WHICH WORK IS JUDGED. AFTER REVIEW AND APPROVAL, SAMPLES MAY BE USED IN CONSTRUCTION OF PROJECT IF NOT RETAINED FOR COMPARISON
   a. OFFICE SAMPLES OF SUFFICIENT SIZE AND QUANTITY SHALL CLEARLY ILLUSTRATE:
      1) FUNCTIONAL CHARACTERISTICS OF PRODUCT OR MATERIAL, WITH INTEGRALLY RELATED PARTS AND ATTACHMENT DEVICES.
      2) FULL RANGE OF COLOR SAMPLES (INCLUDING STANDARD AND PREMIUM RANGES).
      3) AFTER REVIEW AND APPROVAL BY DESIGNER AND THE DCAM PROJECT MANAGER, SAMPLES MAY BE USED IN CONSTRUCTION OF PROJECT IF NOT RETAINED FOR COMPARISON.
   b. FIELD SAMPLES AND MOCK-UPS
      1) ERECT AT PROJECT SITE AT LOCATIONS ACCEPTABLE TO THE DESIGNER AND THE DCAM PROJECT MANAGER.
      2) CONSTRUCT EACH SAMPLE OF MOCK-UP COMPLETE, INCLUDING WORK OF ALL SUBCONTRACTORS REQUIRED IN FINISHED WORK. SAMPLES SHALL BE INCORPORATED INTO A LARGER MOCK-UP WITH VARIED PRODUCTS AND SUBCONTRACTORS IF REQUIRED.
2. UNLESS OTHERWISE SPECIFIED IN THE INDIVIDUAL SECTION, THE GENERAL CONTRACTOR SHALL SUBMIT TWO LABELED SPECIMENS OF EACH SAMPLE.
3. SAMPLES SHALL BE OF ADEQUATE SIZE TO PERMIT PROPER EVALUATION OF MATERIAL. WHERE VARIATIONS IN COLOR OR IN OTHER CHARACTERISTICS ARE TO BE EXPECTED, SAMPLES SHALL SHOW THE MAXIMUM RANGE OF VARIATION. MATERIALS EXCEEDING THE VARIATION OF THE APPROVED SAMPLES WILL NOT BE APPROVED ON THE WORK.
4. SAMPLES WHICH CAN BE CONVENIENTLY MAILED SHALL BE SENT DIRECTLY TO THE DESIGNER, ACCOMPANIED BY TRANSMITTAL NOTICE. ON THE TRANSMITTAL NOTICE THE GENERAL CONTRACTOR SHALL STAMP HIS APPROVAL OF SAMPLES SUBMITTED.
5. ALL OTHER SAMPLES SHALL BE DELIVERED AT THE FIELD OFFICE OF THE DCAM RESIDENT ENGINEER WITH SAMPLE IDENTIFICATION TAG ATTACHED AND PROPERLY FILLED IN. TRANSMITTAL NOTICE OF SAMPLES SO DELIVERED WITH THE GENERAL CONTRACTOR'S STAMP OF APPROVAL, SHALL BE MAILED CONCURRENTLY TO THE DESIGNER AND THE DCAM PROJECT MANAGER TO CONFIRM THEIR RECEIPT THEREOF.
6. IF SAMPLE IS REJECTED BY THE DESIGNER, A NEW SAMPLE SHALL BE RESUBMITTED IN THE MANNER SPECIFIED HEREIN ABOVE. THIS PROCEDURE SHALL BE REPEATED UNTIL THE SAMPLE IS APPROVED IN WRITING BY THE DESIGNER.
7. SAMPLES WILL NOT BE RETURNED UNLESS RETURN IS REQUESTED AT THE TIME OF SUBMISSION. THE RIGHT IS RESERVED TO REQUIRE SUBMISSION OF SAMPLES WHETHER OR NOT SPECIFIED IN THE SPECIFICATIONS, AT NO ADDITIONAL COST TO THE COMMONWEALTH.

E. MOCK-UPS: ERECT AT PROJECT SITE AT LOCATION ACCEPTABLE TO DESIGNER AND THE DCAM PROJECT MANAGER, A MOCK-UP COMPLETE, INCLUDING WORK OF ALL SUBCONTRACTORS REQUIRED IN FINISHED WORK.

1.4 GENERAL CONTRACTOR'S RESPONSIBILITIES:

A. REVIEW SHOP DRAWINGS, PRODUCT DATA AND SAMPLES PRIOR TO SUBMISSION. VERIFY:

1. FIELD MEASUREMENTS.
2. FIELD CONSTRUCTION CRITERIA.
3. CATALOG NUMBERS AND SIMILAR DATA.
4. CONFORMANCE WITH SPECIFICATIONS.
5. INTEGRATION WITH ADJOINING WORK.
6. DELIVERY SCHEDULE.
7. IS THE PRODUCT AN EQUAL TO THE PRODUCT SPECIFIED OR A SUBSTITUTION? IF EITHER OF THESE OCCUR A COMPARISON SHEET MUST BE SUBMITTED COMPARING THE PROPOSED PRODUCT TO THE PRODUCT SPECIFIED.

B. ALL SHOP DRAWINGS PREPARED BY SUBCONTRACTORS SHALL BE PROCESSED THROUGH THE GENERAL CONTRACTOR. THE GENERAL CONTRACTOR SHALL CHECK ALL THE SHOP DRAWINGS FOR CONFORMITY WITH THE CONTRACT DOCUMENTS AND PARTICULARLY FOR FIELD MEASUREMENTS AND PROPER FIT WITH ADJOINING WORK PRIOR TO SUBMITTING SAME TO THE DESIGNER FOR APPROVAL. CERTIFICATION SHALL APPEAR ON EACH SHOP DRAWING STATING THAT THE GENERAL CONTRACTOR HAS MADE HIS/HER CHECK. FORMAT AND CONTENT OF THE GENERAL CONTRACTOR'S CERTIFICATION STAMP SHALL BE SUBJECT TO APPROVAL BY THE DCAM PROJECT MANAGER AND THE DESIGNER AND SHALL INCLUDE, BUT NOT BE LIMITED TO:

1. THE TERM "BY OTHERS" SHALL NOT BE USED ON SHOP DRAWINGS, THE GENERAL CONTRACTOR SHALL STATE BY WHOM RELATED ITEMS ARE TO BE FURNISHED AND/OR INSTALLED.
2. THE DESIGNER RESERVES THE RIGHT TO REJECT AND RETURN TO THE GENERAL CONTRACTOR, WITHOUT EXAMINATION, ANY SHOP DRAWINGS WHICH HAVE NOT BEEN PREVIOUSLY CHECKED AND CERTIFIED AS OUTLINED ABOVE, WHICH CARRY THE TERM "BY OTHER" OR SUCH VAGUE REFERENCE, WHICH ARE DIFFICULT TO READ, WHICH HAVE ARRIVED BY FAX OR WHICH IN ANY WAY ARE OBVIOUSLY NOT IN CONFORMITY WITH CONTRACT REQUIREMENTS.
3. SHOP DRAWINGS SHALL SHOW MATERIALS, DESIGN, DIMENSIONS, CONNECTIONS AND OTHER DETAILS NECESSARY TO ENSURE THAT THEY ACCURATELY INTERPRET THE CONTRACT DOCUMENTS AND SHALL ALSO SHOW ADJOINING WORK IN SUCH DETAIL AS REQUIRED TO PROVIDE PROPER CONNECTION WITH SAME.
4. THE DESIGNER WILL CHECK AND APPROVE SHOP DRAWINGS ONLY FOR CONFORMANCE WITH THE DESIGN CONCEPT AND FOR COMPLIANCE WITH INFORMATION GIVEN IN THE CONTRACT DOCUMENTS. APPROVAL OF SHOP DRAWINGS BY THE DESIGNER WILL NOT RELEASE THE GENERAL CONTRACTOR FROM HIS RESPONSIBILITY FOR FURNISHING SAME OF PROPER DIMENSIONS, SIZE QUANTITY AND QUALITY TO EFFECTIVELY PERFORM THE WORK AND CARRY OUT THE REQUIREMENTS AND INTENT OF CONTRACT DOCUMENTS.
5. SUCH APPROVAL WILL NOT RELIEVE THE GENERAL CONTRACTOR FROM RESPONSIBILITY FOR ERRORS OF ANY SORT IN THE SHOP DRAWINGS, NOR FOR THE PROPER COORDINATION OF ANY SUBMITTAL WITH ALL OTHER WORK. IF THE SHOP DRAWINGS DEVIATE, OR ARE INTENDED TO DEVIATE, FROM THE CONTRACT DOCUMENTS, THE GENERAL CONTRACTOR SHALL SO ADVISE THE DESIGNER IN WRITING AT THE TIME THE SHOP DRAWINGS ARE SUBMITTED, STATING THE DIFFERENCE IN VALUE BETWEEN THE CONTRACT REQUIREMENTS AND THAT DENOTED BY SAID SHOP DRAWINGS.
6. THE GENERAL CONTRACTOR SHALL ASSUME FULL LIABILITY FOR DELAY ATTRIBUTED TO INSUFFICIENT TIME FOR DELIVERY AND/OR INSTALLATION OF MATERIAL OR PERFORMANCE OF THE WORK WHEN APPROVAL OF PERTINENT SHOP DRAWING IS WITHHELD DUE TO THE FAILURE OF THE GENERAL CONTRACTOR TO SUBMIT, REVISE, OR RESUBMIT SHOP DRAWINGS IN ADEQUATE TIME TO ALLOW THE DESIGNER AND THE DCAM PROJECT MANAGER A REASONABLE TIME, NOT TO EXCEED TWENTY-ONE (21)

CALENDAR DAYS, FOR NORMAL CHECKING AND PROCESSING OF EACH SUBMISSION OR RESUBMISSION.

C. COORDINATE EACH SUBMITTAL WITH REQUIREMENTS OF CONTRACT DOCUMENTS.

D. THE GENERAL CONTRACTOR'S RESPONSIBILITY FOR ERRORS AND OMISSIONS IN SUBMITTALS IS NOT RELIEVED BY THE DESIGNER'S REVIEW AND APPROVAL OF SUBMITTALS, UNLESS DESIGNER GIVES TENTATIVE WRITTEN ACCEPTANCE OF SPECIFIC DEVIATIONS IDENTIFIED AS SUCH BY THE GENERAL CONTRACTOR, SUBJECT TO WRITTEN CONCURRENCE BY THE DCAM PROJECT MANAGER.

E. NOTIFY THE DESIGNER IN WRITING AT THE TIME OF SUBMISSION, OF DEVIATIONS IN SUBMITTALS FROM REQUIREMENTS OF CONTRACT DOCUMENTS OR PREVIOUS SUBMISSIONS.

F. WORK THAT REQUIRES SUBMITTALS SHALL NOT COMMENCE UNLESS SUBMITTED WITH DESIGNER'S STAMP AND INITIALS OR SIGNATURE INDICATING REVIEW AND APPROVAL, AND DCAM PROJECT MANAGER'S INITIALS OR SIGNATURE OF CONCURRENCE INDICATE REVIEW AND APPROVAL.

1. NO WORK SHALL BE STARTED IN THE SHOP OR ON THE JOB, OR MATERIALS DELIVERED TO THE SITE, UNTIL PERTINENT SHOP DRAWINGS HAVE BEEN APPROVED BY THE DESIGNER AND THE DCAM PROJECT MANAGER.

G. AFTER AFORESAID REVIEW AND APPROVAL, DISTRIBUTE COPIES.

H. MAINTAIN ONE (2) COPIES OF EACH APPROVED SUBMITTAL AT THE PROJECT SITE. ONE FOR THE GENERAL CONTRACTOR AND ONE FOR THE DCAM RESIDENT.

1.5 SUBMISSION REQUIREMENTS:

A. GENERAL: ALL SUBMITTALS SHALL BE MADE TO THE DESIGNER'S OFFICE. THE QUANTITY AND MAKE-UP OF SUBMITTALS SHALL BE AS ESTABLISHED BY THE DESIGNER; HOWEVER, TWO (2) ADDITIONAL COPIES OF ALL SUBMITTALS SHALL BE TRANSMITTED TO THE DCAM PROJECT MANAGER AT THE SAME TIME THAT SUCH SUBMITTALS ARE TRANSMITTED TO THE DESIGNER. THE DESIGNER WILL LOG AND DISTRIBUTE SUBMITTALS FOR REVIEW BY HIS CONSULTANT ENGINEERS. THE GENERAL CONTRACTOR SHALL DISTRIBUTE ALL CIVIL, STRUCTURAL, AND MEP SHOP DRAWINGS DIRECTLY TO THE DESIGNER. ALL SUBMITTALS SHALL BE IN BOTH HARD AND ELECTRONIC COPIES.

B. MAKE SUBMITTALS PROMPTLY IN ACCORDANCE WITH APPROVED SCHEDULES, AND IN SUCH SEQUENCE AS TO CAUSE NO DELAY IN THE WORK.

C. SUBMIT NUMBER OF SAMPLES SPECIFIED IN EACH SECTION OF THE SPECIFICATIONS.

D. SUBMITTALS SHALL INCLUDE:

1. DATE AND REVISION DATES.
2. PROJECT TITLE AND NUMBER.
3. THE NAMES OF:
   a. DESIGNER;
   b. GENERAL CONTRACTOR;
   c. SUBCONTRACTOR;
   d. SUPPLIER;
   e. MANUFACTURER;
   f. SEPARATE DETAILER WHEN PERTINENT.
4. IDENTIFICATION OF PRODUCT OR MATERIAL.
5. LOCATION OF WORK AND RELATION TO ADJACENT STRUCTURE OR MATERIALS.
6. FIELD DIMENSIONS CLEARLY IDENTIFIED AS SUCH.
7. SPECIFICATION SECTION NUMBER AND SPECIFIC PARAGRAPH UNDER WHICH ITEM IS SPECIFIED.
8. SUBMISSION NUMBER.

9. APPLICABLE STANDARDS, SUCH AS ASTM NUMBER.
10. A BLANK SPACE, FIVE-INCH BY FOUR-INCH, FOR THE DESIGNER'S STAMP.
11. GENERAL CONTRACTOR'S REMARKS. IDENTIFY EXCEPTIONS OR DEVIATIONS FROM CONTRACT DOCUMENTS AND REASONS FOR THEM.
    a. IF SHOP DRAWINGS SUBMITTED BY THE GENERAL CONTRACTOR INDICATE A DEPARTURE FROM THE CONTRACT AND THE DESIGNER DEEMS IT TO BE MINOR ADJUSTMENT IN THE INTEREST OF DCAM (SUBJECT TO CONCURRENCE BY THE GENERAL CONTRACTOR STATING IT DOES NOT INVOLVE A CHANGE IN CONTRACT PRICE OR EXTENSION OF TIME), THE DESIGNER MAY APPROVE THE SUBMISSION, BUT THE APPROVAL SHALL BE SUBJECT TO DCAM REVIEW AND ACCEPTANCE OF THE DESIGNER'S RECOMMENDATION.
    b. THE APPROVAL OF DCAM SHALL BE INFERRED TO CONTAIN IN SUBSTANCE THE FOLLOWING: THE CHANGE IS SO ORDERED WITH THE UNDERSTANDING THAT IT DOES NOT INVOLVE ANY CHANGE IN THE CONTRACT PRICE OR TIME, AND THAT IT IS SUBJECT GENERALLY TO ALL CONTRACT STIPULATIONS AND COVENANTS, AND IS WITHOUT PREJUDICE TO ANY AND ALL RIGHTS OF DCAM UNDER THE CONTRACT.
12. GENERAL CONTRACTOR'S STAMP, INITIALED OR SIGNED CERTIFYING REVIEW AND APPROVAL OF SUBMITTAL.
13. ANY OTHER ITEMS AS CALLED FOR BY THE DESIGNER, THE DCAM PROJECT MANAGER OR REQUIRED BY THE MANUFACTURERS.
14. THE DESIGNER RESERVES THE RIGHT TO ASK FOR SHOP DRAWINGS FOR ANY OR ALL ITEMS ON THE PROJECT, WHETHER OR NOT REQUESTED IN INDIVIDUAL SPECIFICATION SECTIONS, AT NO ADDITIONAL COST TO THE COMMONWEALTH.

1.6 RESUBMISSION REQUIREMENTS:

A. RESUBMISSION: RESUBMISSION PROCEDURE SHALL FOLLOW THE SAME PROCEDURES AS THE INITIAL SUBMITTAL WITH THE FOLLOWING EXCEPTIONS:

B. SHOP DRAWINGS:

1. TRANSMITTAL SHALL CONTAIN THE SAME INFORMATION AS THE FIRST TRANSMITTAL EXCEPT THAT THE SUBMISSION NUMBER SHALL CHANGE SEQUENTIALLY. THE DRAWING NUMBER/DESCRIPTION SHALL BE IDENTICAL AS THE FIRST TRANSMITTAL BUT THE DATE SHALL BE THE REVISED DATE FOR THAT SUBMISSION.
2. NO NEW MATERIAL SHOULD BE INCLUDED ON THE SAME TRANSMITTAL FOR THE RESUBMISSION.
3. INDICATE ON DRAWINGS ANY CHANGES WHICH MAY HAVE BEEN MADE OTHER THAN THOSE REQUESTED BY THE DESIGNER.

C. PRODUCT DATA AND SAMPLES:

1. SUBMIT ANY NEW DATA AND SAMPLES AS REQUIRED FROM PREVIOUS SUBMITTAL.

1.7 THE DCAM PROJECT MANAGER'S AND DESIGNER'S REVIEWS AND DISTRIBUTION OF SUBMISSIONS

A. THE DCAM PROJECT MANAGER AND/OR HIS/HER DESIGNEES WILL REVIEW SUBMITTALS CONCURRENTLY WITH THE DESIGNER AND HIS/HER CONSULTANT ENGINEERS. THE DESIGNER AND THE DCAM PROJECT MANAGER SHALL COMMUNICATE WITHIN THE AFORESAID REVIEW PERIOD TIME FRAME (21 CALENDAR DAYS). THE TIME FRAME FOR THE DESIGNER'S REVIEW WILL NOT EXCEED FOURTEEN (14) CALENDAR DAYS BETWEEN HER/HIS RECEIPT OF SUBMITTAL AND CONTACTING THE DCAM PROJECT MANAGER. AFTER THE DESIGNER'S (AND HIS/HER CONSULTANT ENGINEERS) REVIEW, DISTRIBUTION SHALL BE AS STATED HEREIN.

1. IF SUBMITTAL IS 'REVIEWED - NO EXCEPTIONS TAKEN', OR 'REVIEWED, MAKE CORRECTIONS NOTED', THE DCAM PROJECT MANAGER SHALL COMPOSE A TRANSMITTAL INDICATING THE STATUS. THE DCAM PROJECT MANAGER WILL THEN RETURN ONE (1) COPY OF THE SUBMITTAL TOGETHER WITH THE TRANSMITTAL TO THE

DESIGNER, AND SHALL RETAIN ONE (1) COPY FOR HER/HIS RECORDS. THE DESIGNER SHALL COPY AND ATTACH THE DCAM PROJECT MANAGER'S TRANSMITTAL TO EACH SUBMITTAL, STAMP THE SUBMITTALS IN CONCURRENCE WITH THE STATUS AGREED TO, AND TRANSMIT BACK TO THE GENERAL CONTRACTOR, WITH ONE (1) COPY SENT DIRECTLY TO THE DCAM RESIDENT ENGINEER. THE GENERAL CONTRACTOR SHALL THEN DISTRIBUTE SAID SUBMITTALS TO APPROPRIATE SUBCONTRACTORS, AND ONE (1) COPY TO THE DCAM RESIDENT ENGINEER.

2. IF SUBMITTAL IS 'REVIEWED - REVISE AND RESUBMIT' OR 'REJECTED', THE DCAM PROJECT MANAGER SHALL COMPOSE A TRANSMITTAL INDICATING THE STATUS. THE DCAM PROJECT MANAGER WILL THEN RETURN ONE (1) COPY OF THE SUBMITTAL TOGETHER WITH THE TRANSMITTAL TO THE DESIGNER, AND SHALL RETAIN ONE (1) COPY FOR HER/HIS RECORDS. THE DESIGNER SHALL COPY AND ATTACH THE DCAM PROJECT MANAGER'S TRANSMITTAL TO EACH SUBMITTAL, STAMP THE SUBMITTALS IN CONCURRENCE WITH THE STATUS AGREED TO, AND TRANSMIT BACK TO THE GENERAL CONTRACTOR FOR RESUBMISSION. A COPY OF THE TRANSMITTAL, INDICATING THAT A SUBMITTAL WAS DISAPPROVED AND RETURNED TO THE GENERAL CONTRACTOR, WILL BE FORWARDED FROM THE DESIGNER TO THE DCAM PROJECT MANAGER WITH AN ADDITIONAL COPY FORWARDED FROM THE DESIGNER TO THE DCAM RESIDENT ENGINEER, FOR THEIR RECORDS.
3. IF A SUBMITTAL IS 'REVIEWED - NO EXCEPTIONS TAKEN' OR REVIEWED, MAKE CORRECTIONS NOTED' BY THE DESIGNER, OR APPROVED AS NOTED BY THE DESIGNER, BUT THE DCAM PROJECT MANAGER DOES NOT CONCUR, A MEETING BETWEEN THE DESIGNER AND THE DCAM PROJECT MANAGER WILL IMMEDIATELY BE ESTABLISHED TO RESOLVE THE IMPASSE WITHIN THE OVERALL REVIEW PERIOD TIME FRAME (21 CALENDAR DAYS). THE DCAM PROJECT MANAGER WILL HAVE FINAL AUTHORITY AS TO THE DISPOSITION OF THE SUBMISSION. THE DESIGNER'S POSITION OF APPROVAL (OR DISAPPROVAL) MUST BE BASED ON THE CONTRACTUAL CRITERIA OF DESIGN INTENT, FUNCTION, STRUCTURE, AND DURABILITY. THE DCAM PROJECT MANAGER'S CONTRARY POSITION MUST ALSO BE BASED ON THESE CRITERIA.
4. THE COMBINED REVIEW PERIOD, FOR THE DESIGNER AND THE DCAM PROJECT MANAGER, WILL NOT EXCEED TWENTY-ONE (21) CALENDAR DAYS FROM THE ESTABLISHED DATE OF EACH SUBMISSION INDICATED ON THE SCHEDULE OF SHOP DRAWINGS, PRODUCT DATA AND SAMPLES, PLUS THE ADDITIONAL TIME, IF ANY, FOR DISTRIBUTION BY THE GENERAL CONTRACTOR AND RECEIPT OF SUBMISSIONS BY THE DESIGNER AND DCAM PROJECT MANAGER. THE GENERAL CONTRACTOR IS REQUIRED TO ANTICIPATE REVIEW TIME, INCLUDING TIME FOR POSSIBLE REJECTION AND RESUBMISSION, IN ESTABLISHING SCHEDULE DATES.
   a. THE AFOREMENTIONED TIME PROVIDED THE DESIGNER FOR CHECKING SHOP DRAWINGS IS FROM THE DATE OF RECEIPT OF SHOP DRAWINGS BY THE DESIGNER TO THE MAILING DATE OF SHOP DRAWINGS RETURNED TO THE GENERAL CONTRACTOR BY THE DESIGNER.
5. THE DESIGNER WILL PROCESS THE SUBMISSION AND INDICATE THE APPROPRIATE ACTION ON THE SUBMISSION AND THE TRANSMITTAL. INCOMPLETE OR ERRONEOUS TRANSMITTALS WILL BE RETURNED WITHOUT ACTION.
6. THE DESIGNER WILL FILL OUT TRANSMITTAL IN THE FOLLOWING SEQUENCE:
   a. DATE RECEIVED FROM GENERAL CONTRACTOR.
   b. DATE FORWARDED TO DCAM PROJECT MANAGER.
   c. DATE RECEIVED FROM DCAM PROJECT MANAGER.
   d. DATE RETURNED TO GENERAL CONTRACTOR.
   e. ACTION TAKEN ON SUBMISSION.
   f. DISTRIBUTION, INCLUDING NUMBER OF COPIES DISTRIBUTED AND TYPE OF MATERIAL DISTRIBUTED (I.E., PRINT, BROCHURE OR SAMPLE, ETC.).
   g. DESIGNER'S REMARKS (NOTE MAJOR DEVIATIONS FROM THE CONTRACT DOCUMENTS).

B. DESIGNER'S REVIEW PROCEDURE:

1. STAMPED REVIEWED, "NO EXCEPTIONS TAKEN":
   a. NO CORRECTIONS OR RESUBMISSIONS REQUIRED, FABRICATION MAY PROCEED.
2. STAMPED REVIEWED, "MAKE CORRECTIONS NOTED":
   a. IF GENERAL CONTRACTOR COMPLIES WITH NOTED CORRECTIONS, FABRICATION MAY PROCEED. SUBMIT CORRECTED PRINT FOR FINAL REVIEW.
   b. IF, FOR ANY REASON, THE GENERAL CONTRACTOR CANNOT COMPLY WITH THE NOTED CORRECTIONS, FABRICATION SHALL NOT PROCEED AND GENERAL

CONTRACTOR SHALL RESUBMIT, FOLLOWING PROCEDURES OUTLINED IN THIS SECTION.

3. STAMPED REVIEWED, “REVISE AND RESUBMIT” OR “REJECTED”:
   a. GENERAL CONTRACTOR SHALL REVISE AND RESUBMIT FOR REVIEW. FABRICATION SHALL NOT PROCEED.

C. MANUFACTURER’S INSTRUCTION

1. WHEN REQUIRED IN INDIVIDUAL SPECIFICATION SECTION, SUBMIT MANUFACTURER’S PRINTED INSTRUCTIONS FOR DELIVERY, STORAGE, ASSEMBLY, INSTALLATION, START-UP, ADJUSTING AND FINISHING, IN QUANTITIES SPECIFIED FOR PRODUCT DATA., WITH TWO (2) ADDITIONAL COPIES SUBMITTED TO THE DCAM PROJECT MANAGER AND ONE (1) COPY TO THE DCAM RESIDENT ENGINEER.

D. CERTIFICATES OF COMPLIANCE: SUBMIT CERTIFICATES OF COMPLIANCE WITH THE ASSOCIATED SHOP DRAWINGS, PRODUCT DATA, AND SAMPLES REQUIRED FOR THE PRODUCT IN QUANTITIES SPECIFIED FOR CERTIFICATES OF COMPLIANCE, WITH TWO (2) ADDITIONAL COPIES SUBMITTED TO THE DCAM PROJECT MANAGER AND ONE (1) COPY TO THE DCAM RESIDENT ENGINEER.

E. FIELD SAMPLES: PROVIDE FIELD SAMPLES OF FINISHES AT THE PROJECT AS REQUIRED BY INDIVIDUAL SPECIFICATION SECTION. INSTALL SAMPLE COMPLETE AND FINISHED.

F. PATTERNS AND COLORS: SUBMIT ACCURATE COLOR CHARTS AND PATTERN CHARTS TO THE DESIGNER FOR REVIEW AND SELECTION WHENEVER A CHOICE OF COLOR OR PATTERN IS AVAILABLE IN A SPECIFIED PRODUCT, UNLESS THE EXACT COLOR AND PATTERN OF A PRODUCT ARE INDICATED IN THE CONTRACT DOCUMENTS. COLOR AND PATTERN CHARTS SHALL REPRESENT THE MANUFACTURER’S COMPLETE STANDARD OFFERINGS, EXCEPT WHERE SPECIFICATIONS LIMIT THE OFFERINGS BY DEFINING A PARTICULAR SERIES OR PRODUCT TYPE WHICH IS NORMALLY LIMITED IN COLOR AND PATTERN AVAILABILITY. COLOR AND PATTERN CHARTS SHALL BE SUBMITTED IN QUANTITIES SPECIFIED WITH TWO (2) ADDITIONAL COPIES SUBMITTED TO THE DCAM PROJECT MANAGER AND ONE (1) COPY TO THE DCAM RESIDENT ENGINEER.

1.8 SCHEDULE OF VALUES

A. PRIOR TO THE FIRST REQUEST FOR PAYMENT, THE GENERAL CONTRACTOR SHALL SUBMIT TO THE DESIGNER AND THE DCAM PROJECT MANAGER, A SCHEDULE OF VALUES OF THE VARIOUS PORTIONS OF THE WORK IN SUFFICIENT DETAIL TO REFLECT VARIOUS MAJOR COMPONENTS OF EACH SUBCONTRACTOR, INCLUDING QUANTITIES WHEN REQUESTED, AGGREGATING THE TOTAL CONTRACT SUM, AND DIVIDED SO AS TO FACILITATE PAYMENTS FOR WORK UNDER EACH SECTION. THE SCHEDULE SHALL BE PREPARED IN SUCH FORM AS SPECIFIED OR AS THE DESIGNER OR THE DCAM PROJECT MANAGER MAY APPROVE, AND IT SHALL INCLUDE DATA TO SUBSTANTIATE ITS ACCURACY. EACH ITEM IN THE SCHEDULE OF VALUES SHALL INCLUDE ITS PROPER SHARE OF OVERHEAD AND PROFIT. THIS SCHEDULE, INCLUDING BREAKDOWN AND VALUES, REQUIRES THE APPROVAL OF THE DESIGNER AND THE DCAM PROJECT MANAGER AND SHALL BE USED ONLY AS A BASIS FOR THE GENERAL CONTRACTOR'S REQUEST FOR PAYMENT

PART 2 - PRODUCTS (NOT USED)

PART 3 - EXECUTION (NOT USED)

END OF SECTION

SECTION 013543

ENVIRONMENTAL PROTECTION PROCEDURES

PART 1 - GENERAL

1.1 GENERAL PROVISIONS

A. ATTENTION IS DIRECTED TO THE CONTRACT AND GENERAL CONDITIONS AND ALL SECTIONS WITHIN DIVISION 01 – GENERAL REQUIREMENTS THAT ARE HEREBY MADE A PART OF THIS SECTION OF THE SPECIFICATIONS.

1.2 SUMMARY

A. FURNISHING ALL LABOR, MATERIALS, AND EQUIPMENT AND PERFORM ALL WORK REQUIRED FOR THE PREVENTION OF ENVIRONMENTAL POLLUTION IN CONFORMANCE WITH APPLICABLE LAWS AND REGULATIONS, DURING AND AS THE RESULT OF CONSTRUCTION OPERATION UNDER THIS CONTRACT. FOR THE PURPOSE OF THIS SECTION, ENVIRONMENTAL POLLUTION IS DEFINED AS THE PRESENCE OF CHEMICAL, PHYSICAL, OR BIOLOGICAL ELEMENTS OR AGENTS WHICH ADVERSELY AFFECT HUMAN HEALTH OR WELFARE; UNFAVORABLY ALTER ECOLOGICAL BALANCES OF IMPORTANCE TO HUMAN LIFE; AFFECT OTHER SPECIES OF IMPORTANCE TO MAN; OR DEGRADE THE UTILITY OF THE ENVIRONMENT FOR AESTHETIC AND/OR RECREATIONAL PURPOSES.

B. THE CONTROL OF ENVIRONMENTAL POLLUTION REQUIRES CONSIDERATION OF AIR, WATER, AND LAND, AND INVOLVES MANAGEMENT OF RUNOFF, DUST, NOISE, AND SOLID WASTE, AS WELL AS OTHER POLLUTANTS. WORK SHALL INCLUDE INSTALLING, MAINTAINING, AND REMOVING SEDIMENTATION AND EROSION CONTROL COMPONENTS WITHIN THE LIMITS OF WORK.

C. THIS SECTION DOES NOT ADDRESS EROSION AND SEDIMENTATION CONTROL REQUIREMENTS WHICH ARE ADDRESSED IN SECTION 312500 - EROSION AND SEDIMENTATION CONTROLS AND THE STORMWATER POLLUTION PREVENTION PLAN (SWPPP PLAN) IN THE APPENDICES.

1.3 SECTION INCLUDES

A. APPLICABLE REGULATIONS

B. NOTIFICATIONS

C. PROTECTION OF GROUNDWATER

D. PROTECTION OF STREAMS AND WETLANDS

E. PROTECTION OF LAND RESOURCES

F. PROTECTION OF AIR QUALITY

G. MAINTENANCE OF POLLUTION CONTROL FACILITIES DURING CONSTRUCTION

H. NOISE CONTROL

I. DIESEL EQUIPMENT EMISSION CONTROLS

J. SPILL AND DISCHARGE CONTROL

1.4 RELATED SECTIONS

A. SECTION 015000 - TEMPORARY FACILITIES AND CONTROLS:

B. SECTION 015716 - TEMPORARY PEST CONTROL:

C. SECTION 024100 - DEMOLITION:

D. SECTION 311000 - SITE CLEARING:

E. SECTION 312000 - EARTH MOVING:

F. SECTION 312500 - EROSION AND SEDIMENTATION CONTROLS:

1.5 APPLICABLE REGULATIONS

A. THE GENERAL CONTRACTOR SHALL COMPLY WITH ALL APPLICABLE FEDERAL, STATE AND LOCAL LAWS AND REGULATIONS CONCERNING ENVIRONMENTAL POLLUTION CONTROL AND ABATEMENT.

B. FINES AND RELATED COSTS RESULTING FROM FAILURE TO PROVIDE ADEQUATE PROTECTION AGAINST ANY ENVIRONMENTALLY OBJECTIONABLE ACTS AND CORRECTIVE ACTION TO BE TAKEN ARE THE OBLIGATIONS OF THE GENERAL CONTRACTOR.

1.6 NOTIFICATIONS

A. DCAM MAY NOTIFY THE GENERAL CONTRACTOR IN WRITING OF ANY NON-COMPLIANCE WITH THE FOREGOING PROVISIONS OR OF ANY ENVIRONMENTALLY OBJECTIONABLE ACTS AND CORRECTIVE ACTION TO BE TAKEN. STATE OR LOCAL AGENCIES RESPONSIBLE FOR VERIFICATION OF CERTAIN ASPECTS OF THE ENVIRONMENTAL PROTECTION REQUIREMENTS MAY NOTIFY THE GENERAL CONTRACTOR IN WRITING, THROUGH DCAM, OF ANY NON-COMPLIANCE WITH STATE OR LOCAL REQUIREMENTS. AFTER RECEIPT OF SUCH NOTICE FROM DCAM OR FROM THE REGULATORY AGENCY THROUGH DCAM, THE GENERAL CONTRACTOR SHALL IMMEDIATELY TAKE CORRECTIVE ACTION. SUCH NOTICE, WHEN DELIVERED TO THE GENERAL CONTRACTOR OR HIS/HER AUTHORIZED REPRESENTATIVE AT THE SITE OF THE WORK, SHALL BE DEEMED SUFFICIENT FOR THE PURPOSE. IF THE GENERAL CONTRACTOR FAILS OR REFUSES TO COMPLY PROMPTLY, DCAM MAY ISSUE AN ORDER STOPPING ALL OR PART OF THE WORK UNTIL SATISFACTORY CORRECTIVE ACTION HAS BEEN TAKEN. NO PART OF THE TIME LOST DUE TO ANY SUCH STOP ORDERS SHALL BE MADE THE SUBJECT OF A CLAIM FOR EXTENSION OF TIME OR FOR EXCESS COSTS OR DAMAGES BY THE GENERAL CONTRACTOR UNLESS IT IS LATER DETERMINED THAT THE GENERAL CONTRACTOR WAS IN COMPLIANCE.

PART 2 - PRODUCTS

2.1 WATER

A. WATER USED FOR DUST CONTROL AND EQUIPMENT WASHES SHALL BE CLEAN AND FREE OF SALT, OIL, AND OTHER INJURIOUS MATERIALS. THE GENERAL CONTRACTOR SHALL PROVIDE ALL NECESSARY WATER.

2.2 ONSITE SPILL KIT

A. THE GENERAL CONTRACTOR SHALL PROVIDE THE FOLLOWING MINIMUM EQUIPMENT TO BE KEPT ONSITE AT ALL TIMES DURING SITE WORK ACTIVITIES FOR ANY UNEXPECTED SPILLS OR DISCHARGES:

1. SAND, CLEAN FILL AND ABSORBENT PILLOWS,

2. FOUR DRUMS (55 GALLON, U.S. DOT 17-E OR 17-H),

3. SHOVELS, AND

4. STEAM CLEANER FOR DECONTAMINATION OF TOOLS AND EQUIPMENT.

PART 3 - EXECUTION

3.1 PROTECTION OF GROUNDWATER

A. CARE SHALL BE TAKEN TO PREVENT, OR REDUCE TO A MINIMUM, ANY DISCHARGES TO THE GROUND OF LIQUIDS THAT MAY INFILTRATE TO THE UNDERLYING GROUNDWATER OR ENTER ON-SITE WATERWAYS. WATER THAT HAS BEEN USED FOR WASHING OR PROCESSING, OR THAT CONTAINS OILS OR SEDIMENTS THAT WILL REDUCE THE QUALITY OF THE GROUNDWATER OR WATERWAY SHALL NOT BE DISCHARGED FROM THE SITE. SUCH WATERS SHALL BE COLLECTED AND DISPOSED OF BY THE GENERAL CONTRACTOR IN ACCORDANCE WITH ALL APPLICABLE FEDERAL, STATE AND LOCAL REGULATIONS.

3.2 PROTECTION OF STREAMS AND WETLANDS

A. CARE SHALL BE TAKEN TO PREVENT, OR REDUCE TO A MINIMUM, ANY DAMAGE TO ANY WETLAND FROM POLLUTION BY DEBRIS, SEDIMENT, OR OTHER MATERIAL. MANIPULATION OF EQUIPMENT AND/OR MATERIALS IN DELINEATED WETLAND AREAS IS PROHIBITED. WATER THAT HAS BEEN USED FOR WASHING OR PROCESSING, OR THAT CONTAINS OILS OR SEDIMENTS THAT WILL REDUCE THE QUALITY OF THE WATER IN DOWNSTREAM WATERS OF THE STATE, SHALL NOT BE DISCHARGED FROM THE SITE. SUCH WATERS SHALL BE COLLECTED AND DISPOSED OF BY THE GENERAL CONTRACTOR IN ACCORDANCE WITH ALL APPLICABLE FEDERAL, STATE AND LOCAL REGULATIONS.

3.3 PROTECTION OF LAND RESOURCES

A. LAND RESOURCES WITHIN THE PROJECT BOUNDARIES AND OUTSIDE THE LIMITS OF PERMANENT WORK SHALL BE RESTORED TO A CONDITION, AFTER COMPLETION OF REMEDIATION ACTIVITIES THAT WILL APPEAR TO BE NATURAL AND NOT DETRACT FROM THE APPEARANCE OF THE PROJECT. CONFINE ALL CONSTRUCTION ACTIVITIES TO LIMITS OF WORK AREAS SHOWN ON THE DRAWING.

B. OUTSIDE OF THE LIMITS OF WORK AS SHOWN ON THE DRAWING, DO NOT DEFACE, INJURE, OR DESTROY TREES OR SHRUBS, NOR REMOVE OR CUT THEM WITHOUT PRIOR APPROVAL. SNOW FENCE OR OTHER APPROVED EQUAL SHALL BE ERECTED AT THE “FALL LINE” OF THE TREE CANOPY, AND NO VEHICLES OR STORAGE WILL BE PERMITTED WITHIN, TO PREVENT DAMAGE TO TREES.

C. THE LOCATIONS OF STORAGE AND OTHER FACILITIES, REQUIRED IN THE PERFORMANCE OF THE WORK, SHALL NOT BE WITHIN WETLANDS OR RESOURCE AREAS.

3.4 PROTECTION OF AIR QUALITY

A. BURNING – THE USE OF BURNING AT THE PROJECT SITE FOR THE DISPOSAL OF REFUSE AND DEBRIS WILL NOT BE PERMITTED.

B. DUST CONTROL – MAINTAIN ALL DEMOLITION EXCAVATIONS, STOCKPILES, WASTE AREAS, AND ALL OTHER WORK AREAS WITHIN OR WITHOUT THE PROJECT BOUNDARIES FREE FROM DUST WHICH COULD CAUSE THE STANDARDS FOR AIR POLLUTION TO BE EXCEEDED (MADEP 310 CMR 7.09.-7.10) AND WHICH WOULD CAUSE A HAZARD OR NUISANCE TO OTHERS.

C. THE GENERAL CONTRACTOR SHALL PROVIDE ADEQUATE MEANS FOR THE PURPOSE OF PREVENTING DUST AND ODOR CAUSED BY CONSTRUCTION OPERATIONS THROUGHOUT THE PERIOD OF THE CONSTRUCTION CONTRACT. IF DCAM OR THE DESIGNER INDICATES THAT THE LEVEL OF DUST OR ODORS IS UNACCEPTABLE, THE GENERAL CONTRACTOR SHALL EMPLOY MEASURES NECESSARY TO REDUCE DUST OR ODORS TO AN ACCEPTABLE LEVEL.

D. THE GENERAL CONTRACTOR SHALL IMPLEMENT ENGINEERING CONTROLS (E.G. WATERING, MISTING) TO CONTROL DUST WHENEVER REQUIRED BY THE DESIGNER OR DCAM.

3.5 MAINTENANCE OF POLLUTION CONTROL FACILITIES DURING CONSTRUCTION

A. DURING THE LIFE OF THIS CONTRACT, MAINTAIN ALL FACILITIES CONSTRUCTED FOR POLLUTION, EROSION, AND SEDIMENTATION CONTROL AS LONG AS THE OPERATIONS CREATING THE PARTICULAR POLLUTANT AREA BEING CARRIED OUT.

3.6 NOISE CONTROL

A. THE GENERAL CONTRACTOR SHALL DEVELOP AND MAINTAIN A NOISE-ABATEMENT PROGRAM AND ENFORCE STRICT DISCIPLINE OVER ALL PERSONNEL TO KEEP NOISE TO A MINIMUM. LOCAL NOISE ORDINANCES SHALL GOVERN.

B. THE GENERAL CONTRACTOR SHALL EXECUTE CONSTRUCTION WORK BY METHODS AND BY USE OF EQUIPMENT WHICH WILL REDUCE EXCESS NOISE.

C. EQUIPMENT SHALL BE EQUIPPED WITH SILENCERS OR MUFFLERS DESIGNED TO OPERATE WITH THE LEAST POSSIBLE NOISE IN COMPLIANCE WITH FEDERAL AND STATE REGULATIONS.

D. THE GENERAL CONTRACTOR SHALL MANAGE VEHICULAR TRAFFIC AND SCHEDULING TO REDUCE NOISE.

3.7 DIESEL EQUIPMENT EMISSION CONTROLS

A. ALL MOTOR VEHICLES AND CONSTRUCTION EQUIPMENT SHALL COMPLY WITH ALL PERTINENT LOCAL, STATE, AND FEDERAL REGULATIONS COVERING EXHAUST EMISSION CONTROLS AND SAFETY.

B. ALL GENERAL CONTRACTOR AND SUBCONTRACTOR DIESEL-POWERED NON-ROAD CONSTRUCTION EQUIPMENT WITH ENGINE HORSEPOWER (HP) RATINGS OF 50HP AND ABOVE, WHICH ARE USED ON THE PROJECT SITE FOR A PERIOD IN EXCESS OF 30 CALENDAR DAYS OVER THE COURSE OF THE CONSTRUCTION PERIOD ON THE PROJECT SITE, SHALL BE RETROFITTED WITH EMISSION CONTROL DEVICES IN ORDER TO REDUCE DIESEL EMISSIONS.

C. THE REDUCTION OF EMISSIONS OF VOLATILE ORGANIC COMPOUNDS (VOCS); CARBON MONOXIDE (CO) AND PARTICULATE MATTER (PM) FROM DIESEL-POWERED EQUIPMENT SHALL BE ACCOMPLISHED BY INSTALLING RETROFIT EMISSION CONTROL DEVICES.

D. ACCEPTABLE RETROFIT EMISSION CONTROL DEVICES FOR THE PROJECT SHALL CONSIST OF OXIDATION CATALYSTS OR OTHER COMPARABLE TECHNOLOGIES THAT ARE (1) INCLUDED ON THE US ENVIRONMENTAL PROTECTION AGENCY (EPA) *VERIFIED RETROFIT TECHNOLOGY LIST* AND/OR THE CALIFORNIA AIR RESOURCES BOARD *CURRENTLY VERIFIED TECHNOLOGIES LIST*; AND (2) ARE VERIFIED BY EPA OR CARB, TO PROVIDE A MINIMUM EMISSIONS REDUCTION OF 50 PERCENT FOR VOCS, 40 PERCENT FOR CO AND 20 PERCENT FOR PM. ATTAINMENT OF THE REQUIRED REDUCTION IN PM EMISSIONS CAN ALSO BE ACCOMPLISHED BY USING LESS POLLUTING CLEAN FUELS. VERIFIED TECHNOLOGIES CAN BE IDENTIFIED ON THE FOLLOWING WEBSITES:

EPA: HTTP://WWW.EPA.GOV/OTAQ/RETROFIT/RETROVERIFIEDLIST.HTM

CARB: HTTP://WWW.ARB.CA.GOV/DIESEL/VERDEV/VERIFIEDTECHNOLOGIES/CVT.HTM

E. THE EMISSION CONTROL EQUIPMENT CAN BE PROCURED THROUGH THE STATEWIDE CONTRACT #VEH71 THAT HAS FIXED COSTS ASSOCIATED WITH RETROFITTING OF DIESEL EMISSION CONTROL DEVICES. THE FOLLOWING ARE THE VENDORS LISTED ON THE STATE-WIDE CONTRACT:

1) CUMMINS NORTHEAST, INC.
CONTACT: SCOT LENGEL

TELEPHONE NUMBER: 781-329-1750
E-MAIL ADDRESS: SCOT.L.LENGEL@CUMMINS.COM

2) PATRIOT INTERNATIONAL TRUCKS, LLC/ANDERSON INTERNATIONAL TRUCKS OF BOSTON
CONTACT: JOHN ANDERSON, JR.
TELEPHONE NUMBER: 800-277-4777
E-MAIL ADDRESS: JOHN@ANDERSONMOTORS.COM

3) CLEAN DIESEL TECHNOLOGIES, INC.
CONTACT: GLEN REID
TELEPHONE NUMBER: 203-327-7050
E-MAIL ADDRESS: GREID@CDTI.COM

F. CONSTRUCTION SHALL NOT PROCEED UNTIL THE GENERAL CONTRACTOR HAS SUBMITTED A CERTIFIED LIST OF THE NON-ROAD DIESEL-POWERED CONSTRUCTION EQUIPMENT SUBJECT TO THIS SPECIFICATION WHICH EITHER ARE OR WILL BE RETROFITTED WITH EMISSION CONTROL DEVICES. THE LIST SHALL INCLUDE (1) THE EQUIPMENT NUMBER, TYPE, MAKE, AND GENERAL CONTRACTOR/SUBCONTRACTOR NAME; AND THE EMISSION CONTROL DEVICE MAKE, MODEL, AND EPA VERIFICATION NUMBER. GENERAL CONTRACTORS SHALL ALSO SUBMIT A RECEIPT OR OTHER DOCUMENTATION FROM A MANUFACTURER OR INSTALLER THAT VERIFIES THAT APPROPRIATE EQUIPMENT HAS BEEN INSTALLED. THE GENERAL CONTRACTOR SHALL ALSO IDENTIFY ANY VEHICLES THAT WILL USE CLEAN FUELS. EQUIPMENT THAT HAS BEEN RETROFITTED WITH AN EMISSION CONTROL DEVICE SHALL BE STENCILED OR OTHERWISE CLEARLY MARKED AS "LOW EMISSION EQUIPMENT".

G. THE GENERAL CONTRACTOR SHALL SUBMIT MONTHLY REPORTS, UPDATING THE SAME INFORMATION STATED IN PARAGRAPH F ABOVE, INCLUDING THE QUANTITY OF CLEAN FUEL UTILIZED. THE ADDITION OR DELETION OF NON-ROAD DIESEL EQUIPMENT SHALL BE INDICATED IN THE REPORT.

H. THE GENERAL CONTRACTOR SHALL USE METHODS TO CONTROL NUISANCE ODORS ASSOCIATED WITH DIESEL EMISSIONS FROM CONSTRUCTION EQUIPMENT INCLUDING BUT NOT LIMITED TO THE FOLLOWING: (1) TURNING OFF DIESEL COMBUSTION ENGINES ON CONSTRUCTION EQUIPMENT NOT IN ACTIVE USE AND ON TRUCKS THAT ARE IDLING FOR FIVE MINUTES OR MORE; AND (2) LOCATING DIESEL EQUIPMENT AWAY FROM THE GENERAL PUBLIC AND SENSITIVE RECEPTORS.

I. ALL COSTS ASSOCIATED WITH IMPLEMENTATION OF THE DIESEL EQUIPMENT EMISSIONS CONTROL SHALL BE BORNE BY THE RESPECTIVE GENERAL CONTRACTOR OR SUBCONTRACTOR AND INCLUDED IN THEIR COST FOR PERFORMING THE WORK OF THE CONTRACT.

3.8 SPILL AND DISCHARGE CONTROL

A. THE GENERAL CONTRACTOR SHALL PROVIDE EQUIPMENT AND PERSONNEL TO PERFORM EMERGENCY MEASURES REQUIRED TO CONTAIN ANY SPILLAGE AND TO REMOVE SPILLED MATERIALS AND SOILS OR LIQUIDS THAT BECOME CONTAMINATED DUE TO SPILLAGE. THE COLLECTED SPILL MATERIAL SHALL BE PROPERLY DISPOSED OF AT THE GENERAL CONTRACTOR'S EXPENSE.

B. COSTS TO PROVIDE THE ABOVE SPILL AND DISCHARGE CONTROL MATERIALS SHALL BE INCLUDED IN THE CONTRACT BASE BID PRICE.

END OF SECTION

SECTION 014000

QUALITY REQUIREMENTS

PART 1 - GENERAL

1.1 GENERAL PROVISIONS

A. ATTENTION IS DIRECTED TO THE CONTRACT AND GENERAL CONDITIONS AND ALL SECTIONS WITHIN DIVISION 01 - GENERAL REQUIREMENTS WHICH ARE HEREBY MADE A PART OF THIS SECTION OF THE SPECIFICATIONS.

1.2 REQUIREMENTS INCLUDED

A. GENERAL CONTRACTOR'S QUALITY ASSURANCE.

B. GENERAL CONTRACTOR'S TESTING RESPONSIBILITIES.

C. DCAM'S INDEPENDENT AGENCIES.

D. DUTIES OF THE GENERAL CONTRACTOR'S TESTING AGENCIES.

E. WELDING.

F. FIELD ENGINEERING.

G. EXAMINATION OF SUBSTRATE.

H. GENERAL CONTRACTOR'S QUALITY ASSURANCE AND QUALITY CONTROL PLAN.

1.3 RELATED SECTIONS

A. SECTION 013100 – PROJECT MANAGEMENT AND COORDINATION:

1. GENERAL PROJECT MANAGEMENT AND COORDINATION.

B. SECTION 013129 – BIM COORDINATION:

1. COORDINATION OF BIM MODELING.

C. SECTION 014325 – TESTING AGENCY SERVICES:

1. TESTING TO BE PERFORMED BY THE OWNER'S INDEPENDENT TESTING LABORATORY, EXCLUSIVE OF TESTING TO BE PERFORMED BY THE GENERAL CONTRACTOR.

1.4 GENERAL CONTRACTOR'S QUALITY ASSURANCE

A. QUALIFICATIONS FOR SERVICE AGENCIES: ENGAGE INSPECTION AND TESTING SERVICES AGENCIES, INCLUDING INDEPENDENT TESTING LABORATORIES, WHICH ARE PRE-QUALIFIED AS COMPLYING WITH "RECOMMENDED REQUIREMENTS FOR INDEPENDENT LABORATORY QUALIFICATION" BY THE AMERICAN COUNCIL OF INDEPENDENT LABORATORIES, AND WHICH SPECIALIZE IN THE TYPES OF INSPECTIONS AND TESTS TO BE PERFORMED.

B. EACH INDEPENDENT INSPECTION AND TESTING AGENCY ENGAGED ON THE PROJECT SHALL BE AUTHORIZED BY AUTHORITIES HAVING JURISDICTION TO OPERATE IN THE COMMONWEALTH OF MASSACHUSETTS.

1.5 GENERAL CONTRACTOR'S TESTING RESPONSIBILITIES

A. THE GENERAL CONTRACTOR SHALL PROVIDE INSPECTIONS, TESTS AND QUALITY CONTROL SERVICES SPECIFIED IN INDIVIDUAL SPECIFICATION SECTIONS AND REQUIRED BY GOVERNING AUTHORITIES, EXCEPT WHERE THEY ARE SPECIFICALLY INDICATED TO BE SOLELY THE RESPONSIBILITY OF A SUBCONTRACTOR IN THE RESPECTIVE SPECIFICATION SECTION OR SOLELY THE RESPONSIBILITY OF DCAM.

B. ENGAGE AND PAY FOR THE SERVICES OF AN INDEPENDENT AGENCY ACCEPTABLE TO THE DCAM PROJECT MANAGER TO PERFORM THE SPECIFIED INSPECTIONS, TESTING, AND QUALITY CONTROL. SUBMIT QUALIFICATIONS TO THE DCAM PROJECT MANAGER. GENERAL CONTRACTOR'S TESTING AGENCY/LABORATORY SHALL BE LICENSED BY THE COMMONWEALTH OF MASSACHUSETTS DEPARTMENT OF PUBLIC SAFETY.

C. RE-TESTING: THE GENERAL CONTRACTOR IS RESPONSIBLE FOR RE-TESTING WHERE RESULTS OF REQUIRED INSPECTIONS, TESTS OR SIMILAR SERVICES PROVE UNSATISFACTORY AND DO NOT INDICATE COMPLIANCE WITH CONTRACT DOCUMENTS REQUIREMENTS, REGARDLESS OF WHETHER THE ORIGINAL TEST OR SERVICE WAS THE GENERAL CONTRACTOR'S RESPONSIBILITY.

D. ASSOCIATED SERVICES: THE GENERAL CONTRACTOR SHALL COOPERATE WITH AGENCIES PERFORMING REQUIRED INSPECTIONS, TESTS AND SIMILAR SERVICES AND PROVIDE REASONABLE AUXILIARY SERVICES AS REQUIRED. NOTIFY THE AGENCY SUFFICIENTLY IN ADVANCE OF OPERATIONS TO PERMIT ASSIGNMENT OF PERSONNEL. AUXILIARY SERVICES REQUIRED INCLUDE BUT ARE NOT LIMITED TO:

1. PROVIDE ACCESS TO THE WORK AND FURNISH INCIDENTAL LABOR AND FACILITIES NECESSARY TO FACILITATE INSPECTIONS AND TESTS.
2. TAKE ADEQUATE QUANTITIES OR REPRESENTATIVE SAMPLES OF MATERIALS THAT REQUIRE TESTING OR ASSIST THE AGENCY IN TAKING SAMPLES.
3. PROVIDE FACILITIES FOR STORAGE AND CURING OF TEST SAMPLES AND DELIVERY OF SAMPLES TO TESTING LABORATORIES.
4. PROVIDE THE AGENCY WITH A PRELIMINARY DESIGN MIX PROPOSED FOR USE FOR MATERIAL MIXES THAT REQUIRE CONTROL BY THE TESTING AGENCY.
5. PROVIDE SECURITY AND PROTECTION OF SAMPLES AND TEST EQUIPMENT AT THE PROJECT SITE.

E. THE GENERAL CONTRACTOR SHALL PREPARE AND SUBMIT TO THE DCAM PROJECT MANAGER FOR APPROVAL A QUALITY ASSURANCE AND QUALITY CONTROL PLAN WITHIN 30 DAYS FROM NOTICE TO PROCEED. A QUALITY ASSURANCE AND QUALITY CONTROL (QA/QC) PLAN SHALL PROMOTE COMPLETION OF ALL WORK IN ACCORDANCE WITH THE CONTRACT DOCUMENTS INCLUDING CONTRACT, CONSTRUCTION DRAWINGS, SPECIFICATIONS, PROJECT PROCEDURES, APPROVED SUBMITTALS AND SHOP DRAWINGS, APPROVED CHANGES, APPLICABLE CODES AND REGULATIONS, REFERENCED INDUSTRY STANDARDS, AND SIMILAR ITEMS. THE PRIMARY PURPOSE OF THIS QUALITY PLAN IS TO ENSURE THAT ALL IN PLACE WORK BY THE GENERAL CONTRACTOR AND ALL SUBCONTRACTORS IS PERFORMED CORRECTLY THE FIRST TIME AND IS TURNED OVER AND REPRESENTED AS COMPLETE AND DEFECT FREE IN ACCORDANCE WITH THE CONTRACT DOCUMENTS.

F. IF REQUIRED BY THE CONTRACT, THE GENERAL CONTRACTOR SHALL ASSIGN A DEDICATED QUALITY ASSURANCE AND QUALITY CONTROL MANAGER FOR THE DURATION OF THE PROJECT. IF THE CONTRACT DOES NOT REQUIRE A DEDICATED QUALITY ASSURANCE AND QUALITY CONTROL MANAGER, THE GENERAL CONTRACTOR SHALL PREPARE AND SUBMIT TO THE DCAM PROJECT MANAGER THEIR QA/QC PLAN AS DISCUSSED IN PAR. E ABOVE. IN ADDITION, IF THIS CONTRACT DOES NOT REQUIRE A DEDICATED QA/AC MANAGER, THE DUTIES OF THE QA/AC MANAGER AS DELINEATED IN PAR. 1.5F6 SHALL BE CARRIED OUT BY ANOTHER QUALIFIED MEMBER OF THE GENERAL CONTRACTOR'S ONSITE STAFF.

1. THE PURPOSE OF A QA/QC MANAGER SHALL BE TO PREPARE AND SUBMIT THE QUALITY ASSURANCE AND QUALITY CONTROL PLAN FOR APPROVAL AND TO BE RESPONSIBLE FOR AND TO MANAGE ADHERENCE TO THE PLAN THROUGHOUT THE CONSTRUCTION PROCESS. THE QA/QC MANAGER SHALL BE DESIGNATED FOR THE PROJECT FROM THE INITIAL NOTICE TO PROCEED THROUGH SYSTEM ACCEPTANCES BY BOTH THE DESIGNER AND DCAM PROJECT MANAGER. THE QA/QC MANAGER SHALL AT ALL TIMES INSTILL AN EXPECTATION THAT ALL WORK WILL BE COMPLETED CORRECTLY AND IN AN EXPEDITIOUS MANNER AND SHALL BE RESPONSIBLE FOR ENFORCEMENT OF THE GENERAL CONTRACTOR'S STAFF AND ALL SUBCONTRACTORS TO THIS PLAN.
2. HAVE EXTENSIVE EXPERIENCE IN BUILDING CONSTRUCTION, PROJECT CONTROLS, AND PREVIOUS QA/QC TRAINING AND PRACTICAL KNOWLEDGE.
3. HAVE EXCELLENT COMMUNICATION AND WRITING SKILLS, BE HIGHLY ORGANIZED AND BE ABLE TO WORK WITH BOTH MANAGEMENT AND SUBCONTRACTORS.
4. HAVE A WORKING KNOWLEDGE OF PROJECT SCHEDULING.
5. THE GENERAL CONTRACTOR SHALL SUBMIT SUBSTANTIATING DOCUMENTATION ATTESTING TO THE PROPOSED QA/QC MANAGER'S CAPABILITIES TO THE DCAM PROJECT MANAGER AND THE DESIGNER FOR APPROVAL.
6. DUTIES OF THE QA/QC MANAGER:
   a. PREPARE AND SUBMIT QA/QC PLAN FOR APPROVAL.
   b. CONDUCT AND SUBMIT MINUTES FOR ALL REQUISITE QUALITY MEETINGS.
   c. COORDINATE AND REPORT ON ALL DAILY QUALITY ACTIVITIES.
   d. VERIFY ACCURATE DOCUMENTATION BY SUBCONTRACTORS AND VENDORS.
   e. WORK WITH DCAM COMMISSIONING AGENT.
   f. OVERSEE FINAL PROJECT RECORDS PERTAINING TO QUALITY.
   g. REPORT, PHOTOGRAPH AND DISTRIBUTE EVIDENCE OF DEFICIENT AND/OR DEFECTIVE CONSTRUCTION CONDITIONS OR MATERIALS THAT CANNOT BE CORRECTED WITHIN THREE WORK DAYS OF OBSERVATION. WHEN SUCH CONDITIONS OR MATERIALS ARE REMEDIED REPORT, PHOTOGRAPH AND DISTRIBUTE EVIDENCE OF REMEDIAL WORK PRIOR TO CONCEALING. PHOTOGRAPHS SHALL BE DATED AND DEFECTS AND/OR DEFICIENCIES SHALL BE CLEARLY LABELED ON THE PHOTOGRAPHS.

1.6 DCAM'S INDEPENDENT TESTING AGENCIES

A. DCAM WILL ENGAGE AN INDEPENDENT TESTING AGENCY AT ITS OWN EXPENSE TO PERFORM CERTAIN TESTS AND SIMILAR SERVICES AS SET FORTH IN SECTION 014325. INFORMATION PROVIDED BY DCAM'S INDEPENDENT TESTING AGENCY SHALL BE FOR THE SOLE USE OF DCAM'S PROJECT MANAGER, AND SHALL NOT RELIEVE THE GENERAL CONTRACTOR OF ITS RESPONSIBILITIES TO PROVIDE ITS OWN QUALITY CONTROL, TO MEET ALL REQUIREMENTS OF THE CONTRACT AND TO PROVIDE A COMPLETED PROJECT FREE FROM CONSTRUCTION DEFECTS.

B. IT IS THE GENERAL CONTRACTOR'S RESPONSIBILITY TO PROVIDE AND PAY FOR ITS OWN INSPECTION AND TESTING TO ASSURE QUALITY CONTROL. GENERAL CONTRACTOR SHALL BE RESPONSIBLE FOR COORDINATING ITS WORK WITH REQUIREMENTS OF DCAM'S TESTING AGENCIES, AND SHALL PROVIDE REASONABLE SERVICES IN SUPPORT OF FACILITATING WORK OF DCAM'S TESTING AGENCIES AS REQUIRED.

1.7 DUTIES OF THE GENERAL CONTRACTOR'S TESTING AGENCIES

A. THE GENERAL CONTRACTOR'S INDEPENDENT TESTING AGENCY ENGAGED TO PERFORM INSPECTIONS, SAMPLING AND TESTING OF MATERIALS AND CONSTRUCTION SHALL COOPERATE WITH THE DESIGNER AND GENERAL CONTRACTOR IN PERFORMING ITS DUTIES, AND SHALL PROVIDE QUALIFIED PERSONNEL TO PERFORM REQUIRED INSPECTIONS AND TESTS.

B. THE TESTING AGENCY SHALL NOTIFY THE DESIGNER AND GENERAL CONTRACTOR PROMPTLY OF IRREGULARITIES OR DEFICIENCIES OBSERVED IN THE WORK DURING PERFORMANCE OF ITS SERVICES.

C. THE TESTING AGENCY SHALL NOT PERFORM ANY DUTIES OF THE GENERAL CONTRACTOR.

D. THE GENERAL CONTRACTOR IS RESPONSIBLE FOR SCHEDULING TIMES FOR INSPECTIONS, TESTS, TAKING SAMPLES AND SIMILAR ACTIVITIES.

1.8 GENERAL CONTRACTOR'S QUALITY CONTROL REQUIREMENTS, GENERAL

A. MAINTAIN QUALITY CONTROL OVER SUPPLIERS, MANUFACTURERS, PRODUCTS, SERVICES, SITE CONDITIONS, AND WORKMANSHIP TO PRODUCE WORK OF THE QUALITY AS SPECIFIED.

B. COMPLY FULLY WITH MANUFACTURER'S INSTRUCTIONS, INCLUDING EACH STEP IN SEQUENCE.

C. COMPLY WITH SPECIFIED STANDARDS AS A MINIMUM QUALITY FOR THE WORK EXCEPT WHEN MORE STRINGENT TOLERANCES, CODES, OR SPECIFIED REQUIREMENTS INDICATE HIGHER STANDARDS OR MORE PRECISE WORKMANSHIP.

D. PERFORM WORK BY PERSONS QUALIFIED TO PRODUCE WORKMANSHIP OF SPECIFIED QUALITY.

E. SECURE PRODUCTS IN PLACE WITH POSITIVE ANCHORAGE DEVICES DESIGNED AND SIZED TO WITHSTAND STRESSES, VIBRATION, PHYSICAL DISTORTIONS, OR DISFIGUREMENT. ANCHORAGE DEVICES SHALL BE LABELED TO ALLOW FOR VISUAL INSPECTION AND VERIFICATION OF TYPE OF ANCHORAGE DEVICE.

1.9 WELDING

A. CERTIFIED WELDERS:

1. STRUCTURAL WELDS SHALL BE MADE ONLY BY OPERATORS WHO HAVE BEEN QUALIFIED BY TESTS, AS PRESCRIBED IN THE "STANDARD QUALIFICATION PROCEDURE" OF THE AMERICAN WELDERS SOCIETY, TO PERFORM THE TYPE OF WORK REQUIRED. OPERATORS SHALL BE CERTIFIED WELDERS; CERTIFICATION MUST BE SHOWN TO THE RESIDENT ENGINEER AND MUST BE CURRENT. PROVIDE A COPY OF CERTIFICATION(S) TO THE DCAM RESIDENT ENGINEER.
2. PIPE WELDS SHALL BE MADE BY OPERATORS WHO HAVE BEEN QUALIFIED BY THE NATIONAL CERTIFIED PIPE WELDING BUREAU AND EACH OPERATOR'S QUALIFICATION RECORD SHALL BE SUBMITTED TO THE DESIGNER BEFORE ANY WORK IS PERFORMED. WELDERS' CERTIFICATION CARD MUST BE SHOWN TO THE RESIDENT ENGINEER. . PROVIDE A COPY OF CERTIFICATION(S) TO THE DCAM RESIDENT ENGINEER.
3. SHOP WELDING SHALL BE IN ACCORDANCE WITH THE "CODE FOR WELDING IN BUILDING CONSTRUCTION."
4. WELDERS SHALL PROVIDE THEIR OWN PORTABLE GENERATING EQUIPMENT FOR ELECTRIC WELDING. USE OF THE COMMONWEALTH'S ELECTRICAL SYSTEM FOR WELDING WILL NOT BE PERMITTED.

B. WELDING AND CUTTING:

1. WHERE ELECTRIC OR GAS WELDING OR CUTTING WORK IS DONE ABOVE OR WITHIN TEN (10) FEET OF COMBUSTIBLE MATERIAL OR ABOVE A SPACE THAT MAY BE OCCUPIED BY PERSONS, USE INTERPOSED SHIELDS OF INCOMBUSTIBLE MATERIAL TO PROTECT AGAINST FIRE DAMAGE OR INJURY DUE TO SPARKS AND HOT METAL.
2. PLACE TANKS SUPPLYING GASES FOR GAS WELDING OR CUTTING AT NO GREATER DISTANCE FROM THE WORK THAN IS NECESSARY FOR SAFETY, SECURELY FASTENED AND MAINTAINED IN AN UPRIGHT POSITION IN ACCORDANCE WITH APPLICABLE CODES. STORE SUCH TANKS IN A LOCKED ENCLOSURE REMOTE FROM ANY COMBUSTIBLE MATERIAL AND FREE FROM EXPOSURE TO THE RAYS OF THE SUN OR HIGH TEMPERATURES.
3. MAINTAIN SUITABLE FIRE EXTINGUISHING EQUIPMENT NEAR ALL WELDING AND CUTTING OPERATIONS. WHEN OPERATIONS CEASE FOR THE NOON HOUR OR AT THE END OF THE DAY, THOROUGHLY WET DOWN THE SURROUNDINGS ADJACENT TO WELDING AND CUTTING OPERATIONS.

4. STATION A WORKMAN EQUIPPED WITH SUITABLE FIRE EXTINGUISHING EQUIPMENT NEAR WELDING AND CUTTING OPERATIONS TO SEE THAT SPARKS DO NOT LODGE IN FLOOR CRACKS OR PASS THROUGH FLOOR OR WALL OPENINGS OR LODGE IN ANY COMBUSTIBLE MATERIAL. KEEP THE WORKMAN AT THE SOURCE OF WORK WHICH OFFERS SPECIAL HAZARDS FOR THIRTY (30) MINUTES AFTER THE JOB IS COMPLETED TO MAKE SURE THAT SMOLDERING FIRES HAVE NOT BEEN STARTED.
5. PLACE A QUALIFIED ELECTRICIAN IN CHARGE OF INSTALLING AND MAINTAINING ELECTRIC AND ARC WELDING EQUIPMENT. REMOVE DAMAGED ELECTRIC, ARC OR GAS WELDING EQUIPMENT FROM THE SITE.

1.10 MANUFACTURER'S REPRESENTATIVES

A. IF REQUIRED BY SPECIFIC SPECIFICATION SECTIONS, MANUFACTURER'S REPRESENTATIVE SHALL BE PRESENT AT THE JOB SITE FOR SUPERVISION OF WORK DURING INSTALLATION OF MATERIALS. SUCH REPRESENTATIVE SHALL BE PRESENT DURING ALL ASPECTS OF CONSTRUCTION TO ENSURE PROPER INSTALLATION OF ALL APPLICABLE ITEMS. REFER TO OTHER SECTIONS OF THESE SPECIFICATIONS FOR ADDITIONAL REQUIREMENTS.

1.11 FIELD ENGINEERING

A. SURVEY WORK THROUGH THE COURSE OF ALL PHASES OF CONSTRUCTION SHALL CONFORM TO THE FOLLOWING GUIDELINES:

1. GENERAL CONTRACTOR SHALL EMPLOY A COMPETENT CIVIL ENGINEER OR LAND SURVEYOR, REGISTERED IN THE COMMONWEALTH OF MASSACHUSETTS, WHO WILL ESTABLISH PERMANENT BENCHMARKS. MAINTAIN ALL ESTABLISHED BOUNDS AND BENCHMARKS AND REPLACE AS DIRECTED ANY WHICH ARE DESTROYED OR DISTURBED.
2. PRIOR TO THE INSTALLATION OF PERMANENT CONSTRUCTION (FOUNDATIONS, SLAB-ON-GRADE, UTILITIES, ETC.) GENERAL CONTRACTOR SHALL PROVIDE A CERTIFICATION SIGNED BY ENGINEER/SURVEYOR WARRANTING THE PRINCIPAL LINES, LEVELS, AND OVERALL DIMENSIONS ARE ACCURATELY ESTABLISHED IN ACCORDANCE WITH THE CONTRACT DOCUMENTS.
3. ESTABLISH ALL LINES AND GRADES FOR THE WORK, AND VERIFY ALL LOCATIONS, PROPERTY LINES, WORK LINES AND OTHER DIMENSIONED POINTS INDICATED ON THE DRAWINGS FOR THE PROJECT SITE.
4. SUBMIT TO THE DESIGNER A WRITTEN CONFIRMATION OF LOCATIONS OF ALL LINES, AND ANY DISCREPANCIES BETWEEN CONDITIONS AND LOCATIONS AS THEY ACTUALLY EXIST AND THOSE INDICATED ON THE DRAWINGS. GENERAL CONTRACTOR SHALL NOT COMMENCE ANY EXCAVATION OR CONSTRUCTION WORK UNTIL VERIFICATION HAS BEEN RECEIVED AND APPROVED BY THE DESIGNER. UPON RECEIPT OF APPROVAL FROM THE DESIGNER, PROVIDE ONE (1) COPY OF THAT APPROVAL TO THE DCAM RESIDENT ENGINEER.
5. GENERAL CONTRACTOR SHALL BE HELD RESPONSIBLE FOR ANY DAMAGE INCURRED THEREBY TO DCAM, DUE TO INCORRECT LAYING OUT OF THE WORK. IN THE EVENT THAT ERRORS OR DISCREPANCIES ARE DISCOVERED ON THE DRAWINGS, THE GENERAL CONTRACTOR SHALL IMMEDIATELY NOTIFY THE DESIGNER AND NO FURTHER WORK SHALL BE PERFORMED UNTIL THE DISCREPANCY HAS BEEN CORRECTED BY THE DESIGNER.

1.12 EXAMINATION OF SUBSTRATE

A. INSTALLERS OF MATERIALS, PRODUCTS OR EQUIPMENT SHALL:

1. EXAMINE BASE SURFACES UPON WHICH MATERIALS, PRODUCTS OR EQUIPMENT ARE TO BE INSTALLED.
2. EXAMINE CONDITIONS UPON WHICH MATERIALS, PRODUCTS OR EQUIPMENT ARE TO BE INSTALLED.

3. WHERE THERE IS ANY QUESTION AS TO THE DRYNESS OF A SURFACE, TEST WITH A MODERN MOISTURE- INDICATING MACHINE.
4. NOTIFY THE GENERAL CONTRACTOR, IN WRITING, WITH A COPY TO THE DESIGNER, IF CONDITIONS ARE DETRIMENTAL TO PROPER AND TIMELY CONSTRUCTION AND COMPLETION OF THE WORK.

B. DO NOT PROCEED WITH WORK UNTIL UNSATISFACTORY SUBSTRATE, OR NOT ACCEPTABLE CONDITIONS HAVE BEEN CORRECTED. COMMENCEMENT OF INSTALLATION CONSTITUTES ACCEPTANCE OF SUBSTRATE OR BASE SURFACES, AND THE COST OF ANY CORRECTIVE WORK DUE SHALL BE BORNE BY THE INSTALLER APPLYING HIS/HER MATERIALS, PRODUCTS OR EQUIPMENT THEREON.

1.13 GENERAL CONTRACTOR'S QUALITY ASSURANCE AND QUALITY CONTROL PLAN

A. THE GENERAL CONTRACTOR'S QUALITY ASSURANCE AND QUALITY CONTROL PLAN SHALL INSTILL AN EXPECTATION THAT ALL WORK WILL BE COMPLETED CORRECTLY AND IN AN EXPEDITIOUS MANNER. IN ALL INSTANCES THE GENERAL CONTRACTOR SHALL BE RESPONSIBLE FOR THE ADHERENCE TO AND ENFORCEMENT OF THE GENERAL CONTRACTOR'S STAFF AND ALL SUBCONTRACTORS TO THIS PLAN.

1. SUBMIT THE GENERAL CONTRACTOR'S QUALITY ASSURANCE AND QUALITY CONTROL PLAN TO THE DCAM PROJECT MANAGER WITHIN 30 DAYS FROM THE NOTICE TO PROCEED. SUBMIT IN FORMAT ACCEPTABLE TO DCAM'S PROJECT MANAGER. IDENTIFY PERSONNEL, PROCEDURES, CONTROLS, INSTRUCTIONS, TESTS, RECORDS, AND FORMS TO BE USED TO CARRY OUT GENERAL CONTRACTOR'S QUALITY-ASSURANCE AND QUALITY-CONTROL RESPONSIBILITIES. COORDINATE WITH GENERAL CONTRACTOR'S CONSTRUCTION SCHEDULE.

B. THE PLAN SHALL INCLUDE SPECIFIC PROCEDURES FOR CONDUCTING FORMALIZED INSPECTIONS OF PREDETERMINED SELECTED WORK ITEMS AT THE TIME THE GENERAL CONTRACTOR FIRST STARTS NEW WORK. THESE INSPECTIONS ARE PERFORMED BY A DESIGNATED QA/QC INSPECTION TEAM COMPOSED OF AUTHORIZED REPRESENTATIVES FROM DCAM, THE GENERAL CONTRACTOR, A/E, SUBCONTRACTOR(S) (WHOSE WORK IS BEING INSPECTED) AND OTHERS AS MAY BE REQUIRED.

C. THE QUALITY ASSURANCE AND QUALITY CONTROL PLAN SHALL BE CREATED AS A GENERAL CONTRACTOR PROJECT SPECIFIC QUALITY PLAN ADDRESSING AT A MINIMUM THE FOLLOWING COMPONENTS:

1. QUALITY MEETINGS.
   a. PRE-CONSTRUCTION CONFERENCE.
   b. PRE-INSTALLATION REVIEW MEETINGS.
   c. COORDINATION MEETINGS.
2. REGULAR DAILY INSPECTIONS.
3. BUILDING EXTERIOR ENVELOPE REVIEW.
4. FIRST DELIVERY OF MATERIAL / EQUIPMENT INSPECTIONS.
5. FIRST EQUIPMENT IN PLACE INSPECTIONS.
6. MOCK-UP INSPECTIONS.
7. BENCH MARK INSPECTIONS.
8. FOLLOW-UP BENCH MARK INSPECTIONS.
9. BELOW GRADE / IN-WALL AND ABOVE CEILING INSPECTIONS.
10. UTILITY ACTIVATION AND START-UP INSPECTION PROCEDURES FOR EQUIPMENT/SYSTEMS PRIOR TO VALIDATION.

D. QUALITY MEETINGS:

1. PRE-CONSTRUCTION CONFERENCE:
   a. A CONFERENCE HELD TO DISCUSS ALL ASPECTS OF THE CONSTRUCTION PROJECT SUCH AS THE SCHEDULE, PAYMENT PROCEDURES, CHANGE ORDER PROCEDURES AND MUCH MORE. THIS MEETING IS HELD IMMEDIATELY AFTER CONTRACT AWARD.

b. THE DCAM PROJECT MANAGER, DESIGNER, DESIGN CONSULTANTS, GENERAL CONTRACTOR AND SUBCONTRACTORS WILL ATTEND THESE MEETINGS.

2. PRE-INSTALLATION REVIEW MEETINGS:
   a. A REVIEW MEETING SHALL BE HELD FOR CERTAIN KINDS OF WORK REQUIRING SPECIAL COORDINATION EFFORTS BETWEEN SUBCONTRACTORS, A BETTER UNDERSTANDING OF HOW THE WORK IS TO BE PERFORMED BY ONE OR MORE SUBCONTRACTORS, SEQUENCING OF WORK BETWEEN THE SUBCONTRACTORS, OR A REVIEW OF SPECIAL REQUIREMENTS PERTAINING TO THE WORK TO BE PERFORMED. THIS TYPE OF MEETING IS CONDUCTED JUST PRIOR TO STARTING THE ACTUAL WORK. THE MEETING IS SCHEDULED AND RUN BY THE GENERAL CONTRACTOR ON AN AS NEEDED BASIS.
   b. THE DCAM PROJECT MANAGER, DESIGNER, GENERAL CONTRACTOR AND ALL APPLICABLE SUBCONTRACTORS WILL ATTEND THESE MEETINGS.
   c. THE GENERAL CONTRACTOR'S STAFF AND SUBCONTRACTOR'S ACTUAL SUPERVISORY PEOPLE WHO WILL BE PERFORMING THE WORK IN THE FIELD ARE TO ATTEND THESE MEETINGS.
   d. SAFETY PRECAUTIONS RELATING TO THE WORK TO BE PERFORMED ARE ALSO TO BE DISCUSSED AS PART OF THIS MEETING.
3. COORDINATION MEETINGS:
   a. THE GENERAL CONTRACTOR SHALL CONDUCT PROJECT COORDINATION MEETINGS AT REGULAR INTERVALS. PROJECT COORDINATION MEETINGS ARE IN ADDITION TO SPECIFIC MEETINGS HELD FOR OTHER PURPOSES, SUCH AS REGULAR PROGRESS MEETINGS AND SPECIAL PRE-INSTALLATION MEETINGS. AN EXAMPLE WOULD BE REGULARLY SCHEDULED MEP COORDINATION MEETINGS TO MONITOR THE PROGRESS OF THE MEP COORDINATION PROCESS.
   b. GENERAL CONTRACTOR SHALL REQUEST REPRESENTATION BY EVERY PARTY CURRENTLY INVOLVED IN COORDINATION OR PLANNING FOR THE CONSTRUCTION ACTIVITIES INVOLVED.
   c. GENERAL CONTRACTOR SHALL RECORD MEETING RESULTS AND DISTRIBUTE COPIES TO EVERYONE IN ATTENDANCE AND OTHERS AFFECTED BY DECISIONS OR ACTIONS RESULTING FROM EACH MEETING. THE DCAM PROJECT MANAGER AND THE DESIGNER ARE TO BE ON THE DISTRIBUTION LIST.

E. REGULAR DAILY INSPECTIONS:

1. THE GENERAL CONTRACTOR WILL MONITOR THE QUALITY OF THE IN-PLACE CONSTRUCTION WORK DAILY, TO ENSURE THAT IT COMPLIES WITH THE REQUIREMENTS OF THE CONTRACT DOCUMENTS, PRE-CONSTRUCTION MEETINGS, PRE-INSTALLATION MEETINGS AND COORDINATION MEETINGS.
2. THE GENERAL CONTRACTOR SHALL LOG, RECORD AND DISTRIBUTE DAILY RECORD OF QUALITY MONITORING AS A COMPONENT OF DAILY REPORTING AND PROVIDE NOTIFICATION ON A REGULAR BASIS DURING CONSTRUCTION OF CURRENTLY OBSERVED ITEMS REQUIRING CORRECTIVE ACTION
3. THE QA/QC INSPECTION TEAM WILL INSPECT WORK PERIODICALLY BASED ON OBSERVATIONS NOTED IN GENERAL CONTRACTOR'S REPORTING TO VERIFY COMPLETION AND COMPLIANCE.

F. BUILDING EXTERIOR ENVELOPE REVIEW:

1. DCAM WILL ENGAGE AND PAY FOR AN INDEPENDENT TESTING FIRM TO PERFORM A REVIEW OF THE EXTERIOR ENVELOPE BUILDING DESIGN.
2. THE DESIGN REVIEW WILL BE PERFORMED BY AN INDEPENDENT CONSULTING FIRM EXPERIENCED WITH THIS TYPE OF WORK.
3. THE SCOPE OF SERVICES FOR THE BUILDING EXTERIOR ENVELOPE REVIEW SHALL INCLUDE A DOCUMENTED REVIEW OF THE EXTERIOR BUILDING ENVELOPE DESIGN DETAILS AND SPECIFICATIONS, REVIEW OF PROPOSED PRODUCT AND MATERIAL SUBMITTALS PRIOR TO MATERIAL ACQUISITION, AND ON-SITE QUALITY CONTROL INSPECTIONS AS DEEMED APPROPRIATE BY THE GENERAL CONTRACTOR AND DCAM PROJECT MANAGER.
4. PHYSICAL INSPECTIONS SHALL INCLUDE ON-SITE MEETINGS WITH PROJECT PERSONNEL, INCLUDING THE DCAM PROJECT MANAGER, DESIGNER, GENERAL CONTRACTOR AND SUBCONTRACTORS AT VARIOUS STAGES OF INSTALLATION.
5. THE SCOPE OF THE BUILDING ENVELOPE INSPECTION, OR REVIEW, SHOULD INCLUDE, BUT IS NOT LIMITED TO EXTERIOR BUILDING MATERIALS, FLASHINGS, BRACING,

ANCHORS, WEEP HOLES AND OTHER WATER REMOVAL SYSTEMS FROM WITH-IN CAVITY WALLS, ROOFING SYSTEMS, CAULKING AND OTHER SEALANTS, PARAPET WALL CAP DETAILS, MULLION DETAILS AT OPENINGS, WATERPROOFING BELOW GRADE, AND OTHER ABUTTING MATERIALS OR SYSTEMS.

6. THE GENERAL CONTRACTOR WILL COORDINATE WITH AND SUPPORT THE EXTERIOR ENVELOPE REVIEW INSPECTIONS TO INCLUDE COORDINATION OF FIRST DELIVERY INSPECTIONS, MOCK-UPS AND BENCHMARKS CALLED FOR WITHIN ENVELOPE SYSTEM OR SPECIFIC MATERIALS SPECIFICATIONS TO WHICH THE DESIGN REVIEW OF THIS SECTION MAY APPLY.

G. FIRST DELIVERY OF MATERIAL/EQUIPMENT INSPECTION:

1. THE GENERAL CONTRACTOR SHALL MANAGE AND KEEP CURRENT AN ANTICIPATED DELIVERY SCHEDULE FOR ALL MATERIALS AND EQUIPMENT TO BE DELIVERED TO THE SITE AND PROVIDE REGULAR UPDATES OR UPON REQUEST TO THE DCAM PROJECT MANAGER AND QA/QC INSPECTION TEAM.
2. THE GENERAL CONTRACTOR SHALL LOG, RECORD AND DISTRIBUTE ANY ACCOUNT ON THE FIRST DELIVERY OF EACH TYPE OF MATERIAL OR EQUIPMENT AS A COMPONENT OF DAILY REPORTING AND PROVIDE NOTIFICATION ON A REGULAR BASIS DURING CONSTRUCTION OF CURRENTLY OBSERVED ITEMS REQUIRING CORRECTIVE ACTION
3. FIRST DELIVERIES WILL BE VERIFIED AGAINST THE REQUIREMENTS OF THE DESIGN DOCUMENTS AND THE APPROVED SUBMITTALS. NONCONFORMING MATERIALS AND/OR EQUIPMENT WILL NOT BE ALLOWED TO BE SET INTO PLACE AND WILL BE REMOVED FROM THE SITE.
4. THIS INSPECTION ESTABLISHES THE BASIS FOR JUDGING ALL FUTURE DELIVERIES OF LIKE MATERIAL/EQUIPMENT.

H. FIRST EQUIPMENT IN PLACE INSPECTION:

1. THE GENERAL CONTRACTOR SHALL MANAGE AND KEEP CURRENT AN ANTICIPATED SCHEDULE FOR ALL MATERIALS AND EQUIPMENT TO BE INSPECTED IN PLACE AND PROVIDE REGULAR UPDATES OR UPON REQUEST TO THE DCAM PROJECT MANAGER AND QA/QC INSPECTION TEAM.
2. GENERAL CONTRACTOR AND QA/QC INSPECTION TEAM WILL INSPECT AND DOCUMENT THE FIRST SETTING OF EQUIPMENT TO VERIFY IT IS IN CONFORMANCE WITH THE REQUIREMENTS OF THE CONTRACT DOCUMENTS.
3. THE INSTALLATION AND ASSEMBLY WILL BE VERIFIED AGAINST THE REQUIREMENTS OF THE DESIGN DOCUMENTS AND THE APPROVED SHOP DRAWINGS.
4. THE GENERAL CONTRACTOR SHALL LOG, RECORD AND DISTRIBUTE ANY ACCOUNT FOR EACH TYPE OF FIRST IN PLACE EQUIPMENT INSPECTION AS A COMPONENT OF DAILY REPORTING AND PROVIDE NOTIFICATION ON A REGULAR BASIS DURING CONSTRUCTION OF CURRENTLY OBSERVED ITEMS REQUIRING CORRECTIVE ACTION OR PENDING INSPECTION.
5. UPON ACCEPTANCE OF THE EQUIPMENT IN PLACE, THE GENERAL CONTRACTOR CAN PROCEED WITH PERMANENTLY ANCHORING IT INTO PLACE BY THE MEANS PRESCRIBED IN THE CONTRACT DOCUMENTS.
6. THIS INSPECTION ESTABLISHES THE BASIS FOR JUDGING ALL FUTURE SETTING OF LIKE EQUIPMENT.

I. MOCK-UP INSPECTIONS:

1. THE GENERAL CONTRACTOR WILL NOTE ALL MOCK-UPS REQUIRED BY THE CONTRACT DOCUMENTS AND INCLUDE THE ACTIVITY IN THEIR CONSTRUCTION SCHEDULE AND SUBMIT FOR REVIEW AND APPROVAL OF THE DCAM PROJECT MANAGER, THE DESIGNER AND THE QA/QC INSPECTION TEAM.
2. THE GENERAL CONTRACTOR SHALL LOG, RECORD AND DISTRIBUTE ANY ACCOUNT OF MOCK-UP(S) AS A COMPONENT OF DAILY REPORTING AND PROVIDE NOTIFICATION ON A REGULAR BASIS DURING CONSTRUCTION OF CURRENTLY OBSERVED ITEMS IN PROCESS, REQUIRING CORRECTIVE ACTION, OR FOLLOW UP, AND INSPECTION.
3. GENERAL CONTRACTOR WILL BENCHMARK EACH WORK TYPE WITHIN THE MOCK-UP FOR CONFORMANCE WITH THE REQUIREMENTS AND REVIEW WITH THE QA/QC INSPECTION TEAM.

4. THE QA/QC INSPECTION TEAM SHALL REVIEW, COMMENT THAT THE WORK APPEARS IN CONFORMANCE TO THE REQUIREMENTS. COMMENTS ARE DOCUMENTED AND DISTRIBUTED BY THE GENERAL CONTRACTOR. NON-CONFORMING WORK WILL BE CORRECTED AT NO ADDITIONAL COST TO DCAM.
5. THE APPROVED MOCK-UP ESTABLISHES A BASIS FOR JUDGMENT FOR ALL LATER LIKE CONSTRUCTION.
6. THE MOCK-UP PROCESS AND INSPECTION(S) DOES NOT TAKE AWAY FROM THE RESPONSIBILITY OF THE GENERAL CONTRACTOR AND INSTALLING CONTRACTORS TO PROVIDE A FINISHED AND FULLY FUNCTIONING PRODUCT AND TO MAINTAIN THE CONSTRUCTION SCHEDULE.

J. BENCHMARK INSPECTIONS (IN SEQUENCE WORK):

1. THE GENERAL CONTRACTOR IN CONSULTATION WITH THE DCAM PROJECT MANAGER, DESIGNER AND QA/QC INSPECTION TEAM WILL ESTABLISH WHICH WORK WILL BE SCHEDULED FOR BENCHMARKING DURING THE NORMAL COURSE OF CONSTRUCTION.
2. THE GENERAL CONTRACTOR SHALL LOG, RECORD AND DISTRIBUTE ANY ACCOUNT OF BENCHMARK(S) AS A COMPONENT OF DAILY REPORTING AND PROVIDE NOTIFICATION ON A REGULAR BASIS DURING CONSTRUCTION OF CURRENTLY OBSERVED ITEMS IN PROCESS, REQUIRING CORRECTIVE ACTION, OR FOLLOW UP, AND THAT REQUIRE INSPECTION.
3. GENERAL CONTRACTOR SHALL NOTE THAT THE WORK TO BE INSPECTED HAS BEEN STARTED AND IF FOUND TO BE ACCEPTABLE SHALL CALL FOR A BENCHMARK INSPECTION TO BE CONDUCTED BY THE QA/QC INSPECTION TEAM.
4. THE QA/QC INSPECTION TEAM SHALL REVIEW, COMMENT THAT THE WORK APPEARS IN CONFORMANCE TO THE REQUIREMENTS. COMMENTS ARE DOCUMENTED AND DISTRIBUTED BY THE GENERAL CONTRACTOR. NON-CONFORMING WORK WILL BE CORRECTED AT NO ADDITIONAL COST TO DCAM.
5. THIS INSPECTION ESTABLISHES THE BASIS FOR JUDGING ALL FUTURE WORK OF A LIKE TYPE, NONE OF WHICH SHALL COMMENCE UNTIL THE BENCHMARK IS APPROVED.
6. THE BENCHMARK PROCESS AND INSPECTION(S) DOES NOT TAKE AWAY FROM THE RESPONSIBILITY OF THE GENERAL CONTRACTOR AND INSTALLING CONTRACTORS TO PROVIDE A FINISHED AND FULLY FUNCTIONING PRODUCT AND TO MAINTAIN THE CONSTRUCTION SCHEDULE.

K. FOLLOW-UP BENCHMARK INSPECTIONS:

1. THE GENERAL CONTRACTOR SHALL ENSURE THAT ALL SUBSEQUENT WORK BEING BUILT OF THE SAME TYPE OF WORK THAT WAS PREVIOUSLY BENCHMARKED WILL BE BUILT IN CONFORMANCE TO THE BENCHMARKED WORK WITHOUT DEVIATION.
2. THE GENERAL CONTRACTOR AND QA/QC INSPECTION TEAM WILL RANDOMLY INSPECT SUBSEQUENT WORK BEING BUILT OF THE SAME TYPE OF WORK THAT WAS PREVIOUSLY BENCHMARKED TO ENSURE THE WORK IS BEING BUILT IN CONFORMANCE WITH THE BENCHMARKED WORK.
3. THE GENERAL CONTRACTOR SHALL LOG, RECORD AND DISTRIBUTE ANY ACCOUNT OF FOLLOW-UP BENCHMARK(S) AS A COMPONENT OF DAILY REPORTING AND PROVIDE NOTIFICATION ON A REGULAR BASIS DURING CONSTRUCTION OF CURRENTLY OBSERVED ITEMS IN PROCESS, REQUIRING CORRECTIVE ACTION, OR FOLLOW UP, AND THAT REQUIRE INSPECTION.

L. BELOW GRADE / IN WALL AND ABOVE CEILING INSPECTIONS:

1. IT IS THE INTENT OF THIS SECTION TO MANDATE INSPECTION OF AS MUCH OF THE WORK THAT IS TO BE ENCLOSED BEFORE IT HAS BEEN COVERED OVER TO AVOID HAVING TO REOPEN CLOSED SPACES TO COMPLETE OR CORRECT WORK THEREIN.
2. THE GENERAL CONTRACTOR SHALL VERIFY THAT ALL WORK IS COMPLETE WITHIN THE CONCEALED SPACE AND IS READY TO BE INSPECTED BEFORE IT IS ENCLOSED.
3. THE GENERAL CONTRACTOR AND ALL SUBCONTRACTORS WHO HAVE WORK INSTALLED WITHIN THE WORK AREA SHALL SIGN A CLOSURE FORM STATING THAT THEIR WORK HAS BEEN COMPLETED AND HAS BEEN INSPECTED BY ALL APPLICABLE CODE OFFICIALS. GENERAL CONTRACTOR WILL BE RESPONSIBLE FOR ALL COSTS TO HAVE THE SPACE REOPENED LATER TO COMPLETE OR CORRECT ANY WORK WITHIN THE

SPACE, AND TO HAVE THE SPACE CLOSED AGAIN, INCLUDING ALL COSTS INCURRED FOR ANY SCHEDULE IMPACTS DUE TO THIS WORK.

4. PHOTOGRAPHS OF AREAS TO BE PERMANENTLY ENCLOSED WILL BE TAKEN BY GENERAL CONTRACTOR AND RETAINED AS A PART OF THE PROJECT RECORD.
5. THE GENERAL CONTRACTOR SHALL LOG, RECORD AND DISTRIBUTE ACCOUNT OF BELOW GRADE, IN WALL OR ABOVE CEILING INSPECTIONS AS A COMPONENT OF DAILY REPORTING AND PROVIDE NOTIFICATION ON A REGULAR BASIS DURING CONSTRUCTION OF CURRENTLY OBSERVED ITEMS IN PROCESS, REQUIRING CORRECTIVE ACTION, OR FOLLOW UP.
6. NO CLOSURE OR COVERING OF WORK SHALL PROCEED UNTIL ALL REQUIREMENTS ARE MET AND APPROVAL GIVEN BY THE QA/QC INSPECTION TEAM WHERE SUCH INSPECTIONS ARE TO BE CONDUCTED.

M. UTILITY ACTIVATION AND START-UP INSPECTION PROCEDURES FOR EQUIPMENT/SYSTEMS PRIOR TO VALIDATION. REFER ALSO TO SECTION 018100 - COMMISSIONING FOR ADDITIONAL REQUIREMENTS.

1. ACTIVATION INSPECTION:
   a. THE ACTIVATION INSPECTION IS REQUIRED WHEN THE GENERAL CONTRACTOR HAS VERIFIED THAT SYSTEM WORK MEETS THE CONTRACT DOCUMENT REQUIREMENTS AND HAS COMPLETED THE STATIC INSTALLATION OF EQUIPMENT/SYSTEMS, AND IS READY TO PLACE IT INTO DYNAMIC OPERATION FOR THE PURPOSES OF SHAKEDOWN, DEBUGGING, CHECK-OUT AND SIMILAR ACTIVITIES.
   b. THE GENERAL CONTRACTOR SHALL LOG, RECORD AND DISTRIBUTE ANY ACCOUNT OF PENDING ACTIVATIONS AS A COMPONENT OF DAILY REPORTING AND PROVIDE SEPARATE INDIVIDUAL NOTIFICATION AT A MINIMUM OF 48 HOUR NOTICE PRIOR TO THE SCHEDULED TIME FOR PLACING SPECIFIC EQUIPMENT INTO DYNAMIC OPERATION.
   c. THE GENERAL CONTRACTOR WILL NOTIFY THE QA/QC INSPECTION TEAM WHO WILL INSPECT THE WORK, THE SURROUNDINGS AND PROVIDE COMMENT THAT THE INSTALLATION IS SAFE AND APPEARS MEETS THE REQUIREMENTS FOR OPERATION.
   d. ANY DEFICIENCIES NOTED SHALL BE CORRECTED IMMEDIATELY
   e. THE GENERAL CONTRACTOR WILL THEN PLACE THE EQUIPMENT/SYSTEMS INTO OPERATION FOR HIS USE, SHAKEDOWN, DEBUGGING, CHECK-OUT, AND SIMILAR ACTIVITIES.
2. START-UP INSPECTION:
   a. THE GENERAL CONTRACTOR WILL COORDINATE WITH DCAM'S COMMISSIONING AGENT TO ENSURE THAT START-UP PROCEDURES, O&M'S, PREFUNCTIONAL CHECKLISTS AND TESTING, EQUIPMENT MANUFACTURER'S REPRESENTATION ARE COMPLETED AND/OR IN PLACE ACCORDING TO THE APPROVED COMMISSIONING PLAN.
   b. THE GENERAL CONTRACTOR SHALL LOG, RECORD AND DISTRIBUTE ANY ACCOUNT OF PENDING STARTUPS AS A COMPONENT OF DAILY REPORTING AND PROVIDE SEPARATE INDIVIDUAL NOTIFICATION AT A MINIMUM OF 48 HOUR NOTICE PRIOR TO THE SCHEDULED TIME FOR PLACING SPECIFIC EQUIPMENT INTO FINAL OPERATION.
   c. THE GENERAL CONTRACTOR SHALL COORDINATE WITH THE QA/QC INSPECTION TEAM AND DCAM CA TO ENSURE THAT THE INSTALLATION OPERATES AS REQUIRED.
   d. ALL NON-CONFORMING WORK WILL BE CORRECTED IMMEDIATELY.

PART 2 - PRODUCTS (NOT USED)

PART 3 - EXECUTION (NOT USED)

END OF SECTION

SECTION 014200

REFERENCES

PART 1 - GENERAL

1.1 GENERAL PROVISIONS

A. ATTENTION IS DIRECTED TO THE CONTRACT AND GENERAL CONDITIONS AND ALL SECTIONS WITHIN DIVISION 01 - GENERAL REQUIREMENTS WHICH ARE HEREBY MADE A PART OF THIS SECTION OF THE SPECIFICATIONS.

1.2 DEFINITIONS

A. GENERAL: BASIC CONTRACT DEFINITIONS ARE INCLUDED IN THE CONDITIONS OF THE CONTRACT INCLUDING, BUT NOT LIMITED TO, THE FOLLOWING:

1. DCAM.
2. THE DESIGNER (THE ARCHITECT-OF-RECORD OR ENGINEER-OF-RECORD AS APPLICABLE).
3. THE DCAM PROJECT MANAGER.
4. THE DCAM RESIDENT ENGINEER.
5. THE USER AGENCY.
6. THE GENERAL CONTRACTOR.

B. "REVIEWED": WHEN USED TO CONVEY DESIGNER'S ACTION ON GENERAL CONTRACTOR'S SUBMITTALS, APPLICATIONS, AND REQUESTS, "REVIEWED" IS LIMITED TO DESIGNER'S DUTIES AND RESPONSIBILITIES AS STATED IN THE CONDITIONS OF THE CONTRACT.

C. "DIRECTED": A COMMAND OR INSTRUCTION BY DESIGNER. OTHER TERMS INCLUDING "REQUESTED," "AUTHORIZED," "SELECTED," "APPROVED," "REQUIRED," AND "PERMITTED" HAVE THE SAME MEANING AS "DIRECTED."

D. "INDICATED": REQUIREMENTS EXPRESSED BY GRAPHIC REPRESENTATIONS OR IN WRITTEN FORM ON DRAWINGS, IN SPECIFICATIONS, AND IN OTHER CONTRACT DOCUMENTS. OTHER TERMS INCLUDING "SHOWN," "NOTED," "SCHEDULED," AND "SPECIFIED" HAVE THE SAME MEANING AS "INDICATED."

E. "REGULATIONS": LAWS, ORDINANCES, STATUTES, AND LAWFUL ORDERS ISSUED BY AUTHORITIES HAVING JURISDICTION, AND RULES, CONVENTIONS, AND AGREEMENTS WITHIN THE CONSTRUCTION INDUSTRY THAT CONTROL PERFORMANCE OF THE WORK.

F. "FURNISH": SUPPLY AND DELIVER TO PROJECT SITE, READY FOR UNLOADING, UNPACKING, ASSEMBLY, INSTALLATION, AND SIMILAR OPERATIONS.

G. "INSTALL": OPERATIONS AT PROJECT SITE INCLUDING UNLOADING, TEMPORARILY STORING, UNPACKING, ASSEMBLING, ERECTING, PLACING, ANCHORING, APPLYING, WORKING TO DIMENSION, FINISHING, CURING, PROTECTING, CLEANING, AND SIMILAR OPERATIONS.

H. "PROVIDE": FURNISH AND INSTALL, COMPLETE AND READY FOR THE INTENDED USE.

I. "PROJECT SITE": SPACE AVAILABLE FOR PERFORMING CONSTRUCTION ACTIVITIES SUBJECT TO DCAM AND USER AGENCY APPROVAL. THE EXTENT OF PROJECT SITE IS SHOWN ON DRAWINGS AND MAY OR MAY NOT BE IDENTICAL WITH THE DESCRIPTION OF THE LAND ON WHICH PROJECT IS TO BE BUILT.

1.3 INDUSTRY STANDARDS

A. APPLICABILITY OF STANDARDS: UNLESS THE CONTRACT DOCUMENTS INCLUDE MORE STRINGENT REQUIREMENTS, APPLICABLE CONSTRUCTION INDUSTRY STANDARDS HAVE THE SAME FORCE AND EFFECT AS IF BOUND OR COPIED DIRECTLY INTO THE CONTRACT DOCUMENTS TO THE EXTENT REFERENCED. SUCH STANDARDS ARE MADE A PART OF THE CONTRACT DOCUMENTS BY REFERENCE.

B. PUBLICATION DATES: COMPLY WITH STANDARDS IN EFFECT AS OF DATE OF THE CONTRACT DOCUMENTS, UNLESS OTHERWISE INDICATED.

C. COPIES OF STANDARDS: EACH ENTITY ENGAGED IN CONSTRUCTION ON PROJECT SHOULD BE FAMILIAR WITH INDUSTRY STANDARDS APPLICABLE TO ITS CONSTRUCTION ACTIVITY. COPIES OF APPLICABLE STANDARDS ARE NOT BOUND WITH THE CONTRACT DOCUMENTS.

1. WHERE COPIES OF STANDARDS ARE NEEDED TO PERFORM A REQUIRED CONSTRUCTION ACTIVITY, OBTAIN COPIES DIRECTLY FROM PUBLICATION SOURCE, AND HAVE AVAILABLE ON SITE FOR REFERENCE.

1.4 ABBREVIATIONS AND ACRONYMS

A. INDUSTRY ORGANIZATIONS: WHERE ABBREVIATIONS AND ACRONYMS ARE USED IN SPECIFICATIONS OR OTHER CONTRACT DOCUMENTS, THEY SHALL MEAN THE RECOGNIZED NAME OF THE ENTITIES INDICATED IN GALE RESEARCH'S "ENCYCLOPEDIA OF ASSOCIATIONS" OR IN COLUMBIA BOOKS' "NATIONAL TRADE & PROFESSIONAL ASSOCIATIONS OF THE U.S."

AA	ALUMINUM ASSOCIATION, INC. (THE)
AAMA	AMERICAN ARCHITECTURAL MANUFACTURERS ASSOCIATION
AASHTO	AMERICAN ASSOCIATION OF STATE HIGHWAY AND TRANSPORTATION OFFICIALS
ABAA	AIR BARRIER ASSOCIATION OF AMERICA
ACI	ACI INTERNATIONAL (AMERICAN CONCRETE INSTITUTE)
AGC	ASSOCIATED GENERAL CONTRACTORS OF AMERICA (THE)
AIA	AMERICAN INSTITUTE OF ARCHITECTS (THE)
AISC	AMERICAN INSTITUTE OF STEEL CONSTRUCTION
AISI	AMERICAN IRON AND STEEL INSTITUTE
ALSC	AMERICAN LUMBER STANDARD COMMITTEE, INCORPORATED
AMCA	AIR MOVEMENT AND CONTROL ASSOCIATION INTERNATIONAL, INC.
ANSI	AMERICAN NATIONAL STANDARDS INSTITUTE
APA	APA - THE ENGINEERED WOOD ASSOCIATION
ARMA	ASPHALT ROOFING MANUFACTURERS ASSOCIATION
ASCE	AMERICAN SOCIETY OF CIVIL ENGINEERS
ASHRAE	AMERICAN SOCIETY OF HEATING, REFRIGERATING AND AIR-CONDITIONING ENGINEERS
ASME	ASME INTERNATIONAL (THE AMERICAN SOCIETY OF MECHANICAL ENGINEERS INTERNATIONAL)
ASTM	ASTM INTERNATIONAL (AMERICAN SOCIETY FOR TESTING AND MATERIALS INTERNATIONAL)
AWI	ARCHITECTURAL WOODWORK INSTITUTE
AWPA	AMERICAN WOOD-PRESERVERS' ASSOCIATION
AWS	AMERICAN WELDING SOCIETY
BHMA	BUILDERS HARDWARE MANUFACTURERS ASSOCIATION
BIA	BRICK INDUSTRY ASSOCIATION (THE)
CDA	COPPER DEVELOPMENT ASSOCIATION
CISCA	CEILINGS & INTERIOR SYSTEMS CONSTRUCTION ASSOCIATION
CRI	CARPET & RUG INSTITUTE (THE)
CSI	CONSTRUCTION SPECIFICATIONS INSTITUTE (THE)
DHI	DOOR AND HARDWARE INSTITUTE
EPA	ENVIRONMENTAL PROTECTION AGENCY (UNITED STATES)
FM	FACTORY MUTUAL
FMRC	FACTORY MUTUAL RESEARCH

	(NOW FM GLOBAL)
FSC	FOREST STEWARDSHIP COUNCIL
GA	GYPSUM ASSOCIATION
GANA	GLASS ASSOCIATION OF NORTH AMERICA
GS	GREEN SEAL
HPVA	HARDWOOD PLYWOOD & VENEER ASSOCIATION
ICRI	INTERNATIONAL CONCRETE REPAIR INSTITUTE, INC.
IESNA	ILLUMINATING ENGINEERING SOCIETY OF NORTH AMERICA
ILI	INDIANA LIMESTONE INSTITUTE OF AMERICA, INC.
ISO	INTERNATIONAL ORGANIZATION FOR STANDARDIZATION
ISSFA	INTERNATIONAL SOLID SURFACE FABRICATORS ASSOCIATION
ITS	INTERTEK TESTING SERVICE NA
LEED	LEADERSHIP IN ENERGY & ENVIRONMENTAL DESIGN (USGBC)
MFMA	MAPLE FLOORING MANUFACTURERS ASSOCIATION, INC.
NAAMM	NATIONAL ASSOCIATION OF ARCHITECTURAL METAL MANUFACTURERS
NAIMA	NORTH AMERICAN INSULATION MANUFACTURERS ASSOCIATION
NBGQA	NATIONAL BUILDING GRANITE QUARRIES ASSOCIATION, INC.
NCMA	NATIONAL CONCRETE MASONRY ASSOCIATION
NELMA	NORTHEASTERN LUMBER MANUFACTURERS' ASSOCIATION
NEMA	NATIONAL ELECTRICAL MANUFACTURERS ASSOCIATION
NFPA	NFPA
	(NATIONAL FIRE PROTECTION ASSOCIATION)
NFRC	NATIONAL FENESTRATION RATING COUNCIL
NOFMA	NOFMA: THE WOOD FLOORING MANUFACTURERS ASSOCIATION
	(FORMERLY: NATIONAL OAK FLOORING MANUFACTURERS ASSOCIATION)
NRCA	NATIONAL ROOFING CONTRACTORS ASSOCIATION
NSF	NSF INTERNATIONAL
	(NATIONAL SANITATION FOUNDATION INTERNATIONAL)
NTMA	NATIONAL TERRAZZO & MOSAIC ASSOCIATION, INC. (THE)
NWWDA	NATIONAL WOOD WINDOW AND DOOR ASSOCIATION
	(NOW WDMA)
SDI	STEEL DECK INSTITUTE
SDI	STEEL DOOR INSTITUTE
SGCC	SAFETY GLAZING CERTIFICATION COUNCIL
SJI	STEEL JOIST INSTITUTE
SMACNA	SHEET METAL AND AIR CONDITIONING CONTRACTORS' NATIONAL ASSOCIATION
SSINA	SPECIALTY STEEL INDUSTRY OF NORTH AMERICA
SSPC	SSPC: THE SOCIETY FOR PROTECTIVE COATINGS
TCA	TILE COUNCIL OF AMERICA, INC.
UL	UNDERWRITERS LABORATORIES INC.
USGBC	U.S. GREEN BUILDING COUNCIL
WCLIB	WEST COAST LUMBER INSPECTION BUREAU
WDMA	WINDOW & DOOR MANUFACTURERS ASSOCIATION
	(FORMERLY: NWWDA - NATIONAL WOOD WINDOW AND DOOR ASSOCIATION)
WWPA	WESTERN WOOD PRODUCTS ASSOCIATION

B. CODE AGENCIES: WHERE ABBREVIATIONS AND ACRONYMS ARE USED IN SPECIFICATIONS OR OTHER CONTRACT DOCUMENTS, THEY SHALL MEAN THE RECOGNIZED NAME OF CURRENT EDITION OF CODES IN THE COMMONWEALTH OF MASSACHUSETTS.

PART 2 - PRODUCTS (NOT USED)

PART 3 - EXECUTION (NOT USED)

END OF SECTION

SECTION 014325

TESTING AGENCY SERVICES

PART 1 - GENERAL

1.1 GENERAL PROVISIONS

A. ATTENTION IS DIRECTED TO THE CONTRACT AND GENERAL CONDITIONS AND ALL SECTIONS WITHIN DIVISION 01 - GENERAL REQUIREMENTS WHICH ARE HEREBY MADE A PART OF THIS SECTION OF THE SPECIFICATIONS.

1.2 SUMMARY

A. DCAM WILL ENGAGE AN INDEPENDENT TESTING AGENCY AT ITS OWN EXPENSE TO PERFORM CERTAIN TESTING, TO CONFIRM COMPLIANCE WITH CONTRACT REQUIREMENTS AND CRITERIA DESCRIBED IN THE VARIOUS SPECIFICATION SECTIONS AND AS THE DCAM PROJECT MANAGER DEEMS APPROPRIATE. IT IS THE GENERAL CONTRACTOR'S RESPONSIBILITY TO PROVIDE AND PAY FOR ITS OWN INSPECTION AND TESTING. SEE SECTION 014000.

B. REFER ALSO THE LIST OF TESTING BELOW, AND TO INDIVIDUAL SPECIFICATION SECTIONS FOR THE TYPES AND FREQUENCY OF TESTING TO BE PERFORMED BY DCAM'S INDEPENDENT TESTING LABORATORY.

1.3 RELATED SECTIONS

A. GENERAL CONDITIONS

1. INSPECTIONS AND TESTING REQUIRED BY LAWS, ORDINANCES, RULES, REGULATIONS, OR ORDERS OF PUBLIC AUTHORITIES.

B. SECTION 014000 – QUALITY REQUIREMENTS

1. GENERAL CONTRACTOR'S RESPONSIBILITY FOR TESTING SERVICES TO MAINTAIN QUALITY CONTROL.

1.4 DCAM TESTING AGENCY SERVICES

A. DCAM TESTING AGENCY SERVICES MAY INCLUDE, BUT NOT BE LIMITED TO, THE FOLLOWING:

1. SOILS; IN-PLACE AND FILL.
2. PILES/PIERS.
3. PAVING.
4. LOAM AND SEED.
5. CONCRETE.
6. WATERPROOFING.
7. MASONRY AND MORTAR.
8. STEEL.
9. FIREPROOFING.
10. FIRESTOPPING.
11. ROOFING.
12. HANGERS AND SUPPORTS IN DIVISIONS 21-26.
13. OTHERS AS REQUIRED TO DEMONSTRATE COMPLIANCE WITH CONTRACT REQUIREMENTS.

B. EACH INDEPENDENT INSPECTION AND TESTING AGENCY ENGAGED ON THE PROJECT SHALL BE AUTHORIZED BY AUTHORITIES HAVING JURISDICTION TO OPERATE IN THE COMMONWEALTH OF MASSACHUSETTS.

1.5 ENGAGEMENT OF INDEPENDENT TESTING LABORATORY

A. DCAM WILL ENGAGE AND PAY FOR THE SERVICES OF INDEPENDENT INSPECTORS AND AN INDEPENDENT TESTING LABORATORY TO PERFORM THE SERVICES SPECIFIED UNDER VARIOUS SECTIONS OF THE SPECIFICATIONS.

B. THE SERVICES OF A TESTING LABORATORY AS SPECIFIED IN THIS SECTION IS INTENDED FOR THE DCAM PROJECT MANAGER'S VERIFICATION OF THE GENERAL CONTRACTOR'S COMPLIANCE WITH THE REQUIREMENTS OF THE CONTRACT DOCUMENTS. THIS SHALL IN NO WAY RELIEVE THE GENERAL CONTRACTOR OF ITS RESPONSIBILITIES TO PROVIDE ITS OWN QUALITY CONTROL, TO MEET ALL REQUIREMENTS OF THE CONTRACT AND TO PROVIDE A COMPLETED PROJECT FREE FROM CONSTRUCTION DEFECTS.

C. SERVICES AND QUANTITIES OF TESTING AS SPECIFIED HEREIN ARE APPROXIMATE AND MAY VARY. ACTUAL SERVICES AND QUANTITIES OF TESTING WILL BE DETERMINED BY THE DCAM PROJECT MANAGER AND THE DESIGNER DURING THE CONSTRUCTION PERIOD.

D. LOCATIONS FOR TAKING SAMPLE SPECIMENS FOR TESTING SHALL BE AS DIRECTED BY THE DCAM PROJECT MANAGER AND THE DESIGNER-OF-RECORD.

1.6 GENERAL CONTRACTOR'S RESPONSIBILITIES

A. COOPERATE WITH LABORATORY PERSONNEL AND PROVIDE ACCESS TO THE WORK AND TO FABRICATOR'S FACILITIES AS REQUIRED FOR THE PERFORMANCE OF THEIR TESTING.

B. PROVIDE CASUAL LABOR AND FACILITIES:

1. TO PROVIDE ACCESS TO THE WORK TO BE INSPECTED OR TESTED.
2. TO OBTAIN AND HANDLE SPECIMENS AT THE SITE.
3. TO FACILITATE INSPECTIONS AND TESTS.
4. TO CONSTRUCT A STORAGE BOX, ON THE SITE, OF SUFFICIENT SIZE TO STORE CYLINDERS WHICH WILL AFFORD PROTECTION REQUIRED BY ASTM C31.

C. SHOP DRAWINGS: PROVIDE A COMPLETE SET OF CONSTRUCTION DOCUMENTS AND SHOP AND/OR ERECTION DRAWINGS FOR THE ITEMS BEING INSPECTED AND TESTED.

D. SAMPLES:

1. PROVIDE THE LABORATORY WITH PRELIMINARY REPRESENTATIVE SAMPLES OF MATERIALS TO BE TESTED, IN REQUESTED QUANTITIES.
2. WHEN THE SOURCE, QUALITY, OR CHARACTERISTIC OF AN APPROVED SOURCE CHANGES OR INDICATES LACK OF COMPLIANCE WITH CONTRACT REQUIREMENTS, SUBMIT ADDITIONAL SAMPLES OF MATERIALS TO TESTING LABORATORY.

E. MISCELLANEOUS REPORTS, LISTS: WHEN REQUESTED BY THE DESIGNER OR TESTING LABORATORY, THE GENERAL CONTRACTOR SHALL IMMEDIATELY PROVIDE COPIES OF MILL REPORTS, CUTTING LISTS, SHIPPING BILLS, MATERIAL BILLS, TIME AND PLACE OF SHIPMENT OF MATERIALS TO SHOP AND FIELD, AND ANY RELEVANT DATA ON PRESSURE TESTING AND INVESTIGATIONS OF MATERIALS.

F. NOTIFICATION:

1. TO FACILITATE THE TIMELY SEQUENCE OF INSPECTION AND TESTING, THE GENERAL CONTRACTOR SHALL GIVE ADVANCED NOTIFICATION TO THE TESTING LABORATORY

AND THE DESIGNER THAT WORK HAS PROGRESSED TO THE POINT WHERE INSPECTION AND TESTING MAY PROCEED.

2. ADVANCED NOTIFICATION SHALL BE 48 BUSINESS HOURS (MINIMUM) PRIOR TO COMMENCEMENT OF ACTIVITY REQUIRING TESTING AND INSPECTION.

1.7 GENERAL CONTRACTOR'S QUALITY CONTROL

A. SERVICES OF TESTING LABORATORY RETAINED BY DCAM IS FOR VERIFICATION OF GENERAL CONTRACTOR'S COMPLIANCE AND, IF SUCH TESTS OR INSPECTION INDICATES FAILURE TO COMPLY WITH THESE CONTRACT DOCUMENTS, THE GENERAL CONTRACTOR SHALL BEAR ALL COSTS ASSOCIATED WITH ADDITIONAL TESTING AND INSPECTION AFTER THE WORK HAS BEEN CORRECTED, TO VERIFY COMPLIANCE.

B. PROVIDE A QUALITY CONTROL PROGRAM, TO THE DCAM PROJECT MANAGER AND THE DESIGNER FOR THEIR APPROVAL THAT INCLUDES MONITORING AND ENFORCEMENT OF THE QUALITY PROGRAMS OF ALL SUBCONTRACTORS. SEE SECTION 014000 QUALITY REQUIREMENTS.

1.8 PATCHING

A. AREAS WHERE SAMPLES ARE TAKEN FOR PURPOSES OF TESTING SHALL BE PATCHED BY THE GENERAL CONTRACTOR TO THE SATISFACTION OF THE DCAM PROJECT MANAGER AND THE DESIGNER-OF-RECORD.

1.9 REPORTING OF RESULTS

A. THE TESTING LABORATORY SHALL DOCUMENT THE VALUES OBTAINED IN ALL TESTS, AND SHALL INDICATE DEGREE OF COMPLIANCE WITH THE REQUIREMENTS OF THE CONTRACT DOCUMENTS. TEST REPORTS SHALL INCLUDE THE FOLLOWING INFORMATION:

1. DESIGNER'S PROJECT NAME AND NUMBER.
2. TYPE AND LOCATION OF TEST SAMPLE AND TIME AND DATE OBTAINED.
3. TYPE OF TEST, ASTM OR OTHER APPROPRIATE DESIGNATION.
4. RESULT OF TEST AND DEGREE OF COMPLIANCE WITH CONTRACT DOCUMENTS.

B. TESTING LABORATORY SHALL, ON A WEEKLY BASIS, DISTRIBUTE RESULTS OF ALL TESTS AS FOLLOWS:

1. DCAM – 1 COPY
2. DESIGNER – 1 COPY
3. CONSULTING ENGINEERS (AS DESIGNATED BY THE DESIGNER) – 1 COPY
4. GENERAL CONTRACTOR – 1 COPY
5. SUBCONTRACTOR – 1 COPY

C. NOTIFY ALL PARTIES IMMEDIATELY IN THE EVENT THAT TEST RESULTS INDICATE THAT STRENGTHS, REQUIRED BY THE CONTRACT DOCUMENTS, WILL NOT BE ATTAINED.

PART 2 - PRODUCTS (NOT USED)

PART 3 - EXECUTION (NOT USED)

END OF SECTION

SECTION 014339

MOCKUPS

PART 1 - GENERAL

1.1 GENERAL PROVISIONS

A. ATTENTION IS DIRECTED TO THE CONTRACT AND GENERAL CONDITIONS AND ALL SECTIONS WITHIN DIVISION 01 - GENERAL REQUIREMENTS WHICH ARE HEREBY MADE A PART OF THIS SECTION OF THE SPECIFICATIONS.

1.2 SUMMARY

A. THIS SECTION SPECIFIES REQUIREMENTS FOR MOCKUPS. PROVIDE AND COORDINATE MOCKUP ASSEMBLIES AT PROJECT SITE FOR DESIGNER'S AND THE DCAM PROJECT MANAGER'S REVIEW AND ACCEPTANCE, IN ACCORDANCE WITH REQUIREMENTS OF THE CONTRACT DOCUMENTS. REFER ALSO TO INDIVIDUAL SPECIFICATION SECTIONS FOR MOCKUP REQUIREMENTS. GENERALLY, WITHOUT LIMITATION, MOCKUPS ON SITE INCLUDE THE FOLLOWING:

1. MOCKUPS OF INDIVIDUAL PIECES OF THE WORK, AS SPECIFIED WITHIN INDIVIDUAL SPECIFICATION SECTION.
2. FIELD MOCKUP OF EXTERIOR WALL COMPONENTS. REFER TO THE DRAWINGS FOR EXTENT OF MOCKUP.
3. FIELD MOCKUP OF INTERIOR CONSTRUCTION. REFER TO THE DRAWINGS FOR EXTENT OF MOCKUP.

B. IT SHALL BE THE RESPONSIBILITY OF THE CONTRACTOR TO COORDINATE THE WORK OF THE RELATED SPECIFICATION SECTIONS SO THAT EACH MOCKUP MEETS THE SPECIFIED REQUIREMENTS.

C. EXAMINE CONTRACT DOCUMENTS FOR REQUIREMENTS THAT AFFECT WORK OF THIS SECTION.

1.3 DEFINITIONS

A. FREESTANDING MOCKUPS: FULL-SIZE, PHYSICAL ASSEMBLIES THAT ARE CONSTRUCTED ON-SITE IN A PROTECTED LOCATION.

1. FREESTANDING MOCKUPS ARE NOT PART OF THE FINAL CONSTRUCTION. FREESTANDING MOCKUPS WILL BE USED TO VERIFY SELECTIONS MADE UNDER SAMPLE SUBMITTALS, TO DEMONSTRATE AESTHETIC EFFECTS, QUALITIES OF MATERIALS AND EXECUTION, AND TO REVIEW CONSTRUCTION, COORDINATION, TESTING, AND OPERATION.
2. APPROVED FREESTANDING MOCKUPS ESTABLISH THE STANDARD BY WHICH THE WORK WILL BE JUDGED.
3. APPROVED FREESTANDING MOCKUPS REMAIN ON SITE DURING THE BALANCE OF CONSTRUCTION AND ARE DEMOLISHED AND REMOVED FROM SITE AT COMPLETION OF THE WORK THEY REPRESENT.

B. IN-PLACE MOCKUPS: FULL-SIZE, PHYSICAL ASSEMBLIES THAT ARE CONSTRUCTED IN-PLACE AND REMAIN PART OF FINAL CONSTRUCTION.

1. IN-PLACE MOCKUPS WILL BE USED TO VERIFY SELECTIONS MADE UNDER SAMPLE SUBMITTALS, TO DEMONSTRATE AESTHETIC EFFECTS, QUALITIES OF MATERIALS AND EXECUTION, AND TO REVIEW CONSTRUCTION, COORDINATION, TESTING, OR OPERATION.

2. APPROVED IN-PLACE MOCKUPS ESTABLISH THE STANDARD BY WHICH THE WORK WILL BE JUDGED.
3. APPROVED MOCKUPS REMAIN PART OF THE COMPLETED WORK.

1.4 SUBMITTALS

A. SCHEDULE: GENERAL CONTRACTOR SHALL SUBMIT A SCHEDULE OF MOCKUP CONSTRUCTION, INCLUDING DATES FOR MOCKUP REVIEW BY THE DESIGNER.

1. MOCKUP SCHEDULE SHALL BE REVIEWED AT EACH PROGRESS MEETING, REVISED AND RESUBMITTED AS REQUIRED.
2. SCHEDULE SHALL ALLOW SUFFICIENT TIME FOR MOCKUPS WHICH ARE NOT ACCEPTED TO BE RECONSTRUCTED AND REVIEWED UNTIL ACCEPTED BY THE DESIGNER.

B. SHOP DRAWINGS OF MOCKUPS: PROVIDE LARGE SCALE SHOP DRAWINGS FOR FABRICATION, INSTALLATION AND ERECTION OF ALL PARTS OF EACH MOCKUP. INCLUDE PLANS, ELEVATIONS, AND DETAILS OF ANCHORAGE, CONNECTIONS AND ACCESSORY ITEMS. INCLUDE DETAILS OF FOUNDATION AND TEMPORARY SUPPORTS.

C. PHOTOGRAPHS OF MOCKUPS: SUBMIT 20 DIGITAL PHOTOGRAPHS OF MOCKUPS AFTER COMPLETION OF INSTALLATION AND ACCEPTANCE OF EACH MOCKUP. SUBMIT ON CD TO THE DCAM PROJECT MANAGER.

D. SUBMITTAL SAMPLES: REFER TO INDIVIDUAL SPECIFICATION SECTIONS FOR SUBMITTAL REQUIREMENTS OF MOCKUP COMPONENTS AND COORDINATE ACCORDINGLY.

1.5 QUALITY ASSURANCE

A. MOCKUP MODIFICATIONS: MAKE DESIGN MODIFICATIONS TO WORK ONLY AS REQUIRED TO MEET PERFORMANCE REQUIREMENTS AND TO COORDINATE THE WORK. INDICATE PROPOSED DESIGN MODIFICATIONS ON SHOP DRAWINGS. MAINTAIN ORIGINAL DESIGN CONCEPT WITHOUT ALTERING PROFILES AND ALIGNMENTS INDICATED.

PART 2 - PRODUCTS

2.1 MATERIALS AND PRODUCTS

A. PROVIDE MATERIALS, COMPONENTS, AND PRODUCTS FOR MOCKUPS AS SPECIFIED IN INDIVIDUAL SPECIFICATION SECTIONS.

PART 3 - EXECUTION

3.1 GENERAL

A. REFER TO INDIVIDUAL SPECIFICATION SECTIONS FOR SPECIFIC REQUIREMENTS REGARDING CONDITION OF SURFACES, ERECTION, AND ERECTION TOLERANCES.

3.2 FIELD MOCKUP OF INTERIOR OF STORM WINDOW

A. PROVIDE A FIELD MOCKUP OF THE INTERIOR STORM WINDOW AT LOCATION AND IN CONFIGURATION INDICATED IN BOD. THE INTERIOR OF STORM WINDOW MOCKUP SHALL INCLUDE THE VENEER SYSTEMS AND BACKUP, ONE WINDOW AND ALL RELATED FLASHINGS AND SEALANTS, AND BACKUP WALL CONSTRUCTION. OBTAIN DESIGNER'S ACCEPTANCE OF VISUAL QUALITIES PRIOR TO COMMENCING WORK THAT INDIVIDUAL MOCKUP IS INTENDED TO REPRESENT. PROTECT AND MAINTAIN APPROVED MOCKUPS THROUGHOUT THE WORK OF THE CONTRACT. LOCATE MOCKUPS AT THE PROJECT SITE AS DIRECTED BY THE DESIGNER.

1. PROVIDE MODIFICATIONS TO MOCKUP AS REQUIRED UNTIL DESIGNER'S APPROVAL HAS BEEN RECEIVED.

3.3 REPAIR AND PROTECTION

A. GENERAL: ON COMPLETION OF TESTING, INSPECTING, SAMPLE TAKING, AND SIMILAR SERVICES, REPAIR AND RESTORE SUBSTRATES AND FINISHES.

1. PROVIDE MATERIALS AND COMPLY WITH INSTALLATION REQUIREMENTS SPECIFIED IN OTHER SPECIFICATION SECTIONS. RESTORE PATCHED AREAS AND EXTEND RESTORATION INTO ADJOINING AREAS WITH DURABLE SEAMS THAT ARE AS NON-VISIBLE AS POSSIBLE.

B. PROTECT CONSTRUCTION EXPOSED BY OR FOR QUALITY-CONTROL SERVICE ACTIVITIES.

3.4 REMOVAL AND DISPOSAL

A. DEMOLISH AND REMOVE MOCKUPS FROM SITE AT THE COMPLETION OF THE PROJECT. LEGALLY DISPOSE OF DEMOLISHED MOCKUP MATERIALS. COMPLY WITH REQUIREMENTS OF SECTION 017419 – CONSTRUCTION WASTE MANAGEMENT AND DISPOSAL.

END OF SECTION

SECTION 015000

TEMPORARY FACILITES AND CONTROLS

1.1 GENERAL PROVISIONS

A. ATTENTION IS DIRECTED TO THE CONTRACT AND GENERAL CONDITIONS AND ALL SECTIONS WITHIN DIVISION 01 - GENERAL REQUIREMENTS WHICH ARE HEREBY MADE A PART OF THIS SECTION OF THE SPECIFICATIONS.

1.2 REQUIREMENTS INCLUDED

A. TEMPORARY FACILITIES AND CONTROLS INCLUDING THE FOLLOWING:
1. TEMPORARY WATER.
2. WEATHER PROTECTION.
3. HEATING DURING CONSTRUCTION.
4. TEMPORARY POWER.
5. HOISTING EQUIPMENT AND MACHINERY.
6. STAGING.
7. MAINTENANCE OF ACCESS.
8. DUST CONTROL.
9. NOISE CONTROL.
10. INDOOR AIR QUALITY (IAQ) MANAGEMENT.
11. ENCLOSURES.
12. CLEANING DURING CONSTRUCTION.
13. FIELD OFFICES.
14. TELEPHONE SERVICE.
15. SANITARY FACILITIES.
16. CONSTRUCTION BARRIERS.
17. PARKING.
18. DEBRIS CONTROL AND REMOVAL.
19. SAFETY PROTECTION.
20. VEHICLE AND EQUIPMENT PROTECTION.
21. SHORING.
22. CONSTRUCTION FENCE.
23. PROJECT IDENTIFICATION SIGN.

1.3 TEMPORARY WATER

A. WATER WILL BE FURNISHED BY THE GENERAL CONTRACTOR UP TO THE POINT INDICATED ON THE DRAWINGS FOR THE PERMANENT CONNECTION TO THE WATER SUPPLY SYSTEM.

B. WATER SHALL BE DISTRIBUTED BY MEANS OF CONNECTIONS TO THE PERMANENT SERVICE LINES THAT ARE TO BE INSTALLED AT THE EXPENSE OF THE GENERAL CONTRACTOR.

C. ANY TEMPORARY HOSES AND PIPE LINES AND CONNECTIONS FROM THE PERMANENT SERVICE LINES EITHER OUTSIDE OR WITHIN THE BUILDING, NECESSARY FOR THE USE OF THE GENERAL CONTRACTOR AND HIS SUBCONTRACTORS SHALL BE INSTALLED, PROTECTED, AND MAINTAINED AT THE EXPENSE OF THE PLUMBING SUBCONTRACTOR.

D. TEMPORARY HOSES AND TEMPORARY PIPE LINES USED FOR TRANSPORTING WATER SHALL NOT BE RUN UNATTENDED OR UNPROTECTED ACROSS PARKING AREAS, PARKING AREA ENTRANCE, WALKWAYS, PLAZAS, OR STEPS. TEMPORARY HOSES AND TEMPORARY PIPELINES SHALL NOT BE PERMITTED TO BE INSTALLED ALONG, THROUGH OR ACROSS CORRIDOR AND OCCUPIED ROOMS OR SPACES.

E. THE GENERAL CONTRACTOR SHALL PROVIDE AN ADEQUATE SUPPLY OF DRINKING WATER FROM APPROVED SOURCES OF ACCEPTABLE QUALITY, SATISFACTORILY COOLED, FOR HIS EMPLOYEES AND THOSE OF HIS SUBCONTRACTORS.

F. USE OF THE WATER MAY BE DISCONTINUED BY THE COMMONWEALTH IF, IN THE OPINION OF THE DCAM PROJECT MANAGER, IT IS WASTEFULLY USED.

1.4 WEATHER PROTECTION

A. IT IS THE INTENT OF THESE SPECIFICATIONS TO REQUIRE THAT THE GENERAL CONTRACTOR SHALL PROVIDE TEMPORARY ENCLOSURES AND HEAT TO PERMIT CONSTRUCTION WORK TO BE CARRIED ON DURING THE MONTHS OF NOVEMBER THROUGH MARCH IN COMPLIANCE WITH M.G.L. CHAPTER 149, SECTION 44D(G). UNDER NO CIRCUMSTANCES SHALL THE GENERAL CONTRACTOR SUSPEND ANY WORK DURING THE MONTHS OF NOVEMBER THROUGH MARCH BECAUSE OF THEIR RELUCTANCE TO PROVIDE AND PAY FOR TEMPORARY WEATHER PROTECTION. THESE SPECIFICATIONS ARE NOT TO BE CONSTRUED AS REQUIRING ENCLOSURES OR HEAT FOR OPERATIONS THAT ARE NOT ECONOMICALLY FEASIBLE TO PROTECT IN THE JUDGMENT OF THE DESIGNER. INCLUDED IN THE PRECEDING CATEGORY, WITHOUT LIMITATION, ARE SUCH ITEMS AS SITE WORK, EXCAVATION, STEEL ERECTION, ERECTION OF CERTAIN "EXTERIOR" WALL PANELS, ROOFING, AND SIMILAR OPERATIONS.

B. "WEATHER PROTECTION" SHALL MEAN THE TEMPORARY PROTECTION OF THAT WORK ADVERSELY AFFECTED BY MOISTURE, WIND, AND COLD, BY COVERING, ENCLOSING AND/OR HEATING. THIS PROTECTION SHALL PROVIDE ADEQUATE WORKING AREAS DURING THE MONTHS OF NOVEMBER THROUGH MARCH AS DETERMINED BY THE DESIGNER AND CONSISTENT WITH THE APPROVED CONSTRUCTION SCHEDULE TO PERMIT THE CONTINUOUS PROGRESS OF ALL WORK NECESSARY TO MAINTAIN AN ORDERLY AND EFFICIENT SEQUENCE OF CONSTRUCTION OPERATIONS. THE GENERAL CONTRACTOR SHALL FURNISH AND INSTALL ALL "WEATHER PROTECTION" MATERIAL AND BE RESPONSIBLE FOR ALL COSTS, INCLUDING HEATING REQUIRED TO MAINTAIN A MINIMUM TEMPERATURE OF 50 DEGREES F. AT THE WORKING SURFACE. THIS PROVISION DOES NOT SUPERSEDE ANY SPECIFIC REQUIREMENTS FOR METHODS OF CONSTRUCTION, CURING OF MATERIALS OR THE APPLICABLE GENERAL CONDITIONS SET FORTH IN THE CONTRACT ARTICLES WITH ADDED REGARD TO PERFORMANCE OBLIGATIONS OF THE GENERAL CONTRACTOR.

C. WITHIN 30 CALENDAR DAYS AFTER HIS AWARD OF CONTRACT, THE GENERAL CONTRACTOR SHALL SUBMIT IN WRITING TO THE DESIGNER FOR APPROVAL, THREE COPIES OF HIS PROPOSED METHODS FOR "WEATHER PROTECTION."

D. INSTALLATION OF WEATHER PROTECTION AND HEATING DEVICES SHALL COMPLY WITH ALL SAFETY REGULATIONS INCLUDING PROVISIONS FOR ADEQUATE VENTILATION AND FIRE PROTECTION DEVICES. HEATING DEVICES WHICH MAY CAUSE DAMAGE TO FINISH SURFACES SHALL NOT BE USED.

E. THE GENERAL CONTRACTOR SHALL FURNISH AND INSTALL ONE ACCURATE FAHRENHEIT THERMOMETER AT EACH WORK AREA AS DESIGNATED BY THE DESIGNER. HOWEVER, ONE ADDITIONAL ACCURATE FAHRENHEIT THERMOMETER SHALL BE PROVIDED FOR EVERY 2,000 SQUARE FEET OF FLOOR SPACE WHERE THE WORK AREAS EXCEED 2,000 SQUARE FEET.

1.5 HEATING DURING CONSTRUCTION

A. WITHIN 30 CALENDAR DAYS AFTER THE COMMENCEMENT OF WORK UNDER THIS CONTRACT, THE GENERAL CONTRACTOR SHALL SUBMIT IN WRITING TO THE DESIGNER FOR APPROVAL, THREE COPIES OF HIS METHOD AND TIME SCHEDULE FOR HEATING DURING CONSTRUCTION WHICH SHALL CONCUR WITH HIS GENERAL PROGRESS SCHEDULE HERETO BEFORE SUBMITTED AS REQUIRED UNDER ARTICLE V OF THE CONTRACT AND GENERAL CONDITIONS.

B. AFTER THE BUILDING OR PORTION THEREOF IS COMPLETELY ENCLOSED BY EITHER PERMANENT CONSTRUCTION OR SUBSTANTIAL TEMPORARY MATERIALS HAVING A COMPARABLE RESISTANCE AS THE SPECIFIED PERMANENT CONSTRUCTION. THE GENERAL

CONTRACTOR SHALL PAY AND PROVIDE HEAT THEREIN OF NOT LESS THAN 50 DEGREES F., NOR MORE THAN 75 DEGREES F., WHICH SHALL BE CONTINUOUSLY MAINTAINED IN THE ENCLOSED AREA TO THE EXTENT NECESSARY TO PROPERLY PROGRESS AND PROTECT THE WORK UNTIL THE PROJECT IS ACCEPTED.

C. THE GENERAL CONTRACTOR SHALL FURNISH AND INSTALL ONE ACCURATE RECORDING FAHRENHEIT THERMOMETER AT A PLACE DESIGNATED BY THE DESIGNER, AND ONE ADDITIONAL ACCURATE THERMOMETER FOR EVERY 2,000 SQUARE FEET OF FLOOR SPACE, LOCATED AS DIRECTED BY THE DESIGNER IN ORDER TO DETERMINE IF THE SPECIFIED TEMPERATURES ARE MAINTAINED. THE GENERAL CONTRACTOR OR HIS AUTHORIZED AGENT SHALL FURNISH DAILY TO THE RESIDENT ENGINEER THREE COPIES OF A SIGNED STATEMENT OF TEMPERATURES RECORDED EVERY THREE HOURS.

D. THE GENERAL CONTRACTOR, WITH THE APPROVAL OF THE DESIGNER AND DCAM, MAY USE THE PERMANENT HEATING SYSTEM AS SPECIFIED FOR THE PROJECT ONCE IT HAS BEEN TESTED, FLUSHED OUT AND CHEMICALLY TREATED, THOROUGHLY CLEANED OF ALL CONSTRUCTION DUST AND DIRT, AND IS READY TO OPERATE. THE GENERAL CONTRACTOR SHALL PAY ALL ENERGY COSTS FOR HEATING DURING CONSTRUCTION AND PROVIDE METERS IF REQUIRED. THE GENERAL CONTRACTOR AND THE HVAC AND/OR ELECTRICAL SUBCONTRACTOR SHALL COORDINATE THEIR WORK SO THAT THE PERMANENT HEATING SYSTEM FOR THE BUILDING WILL BE AVAILABLE AND READY TO PROVIDE HEAT AS SOON AS THE BUILDING IS CLOSED IN. IN CASE THE CONTRACT INCLUDES MORE THAN ONE BUILDING, THE HEATING SHALL BE PROVIDED FOR EACH BUILDING IN ACCORDANCE WITH THE ABOVE PROVISION.

E. OPERATING LABOR SHALL BE PROVIDED FOR CONTINUOUS DIRECT ATTENDANCE, FOR FREQUENT INSPECTION OF THE SYSTEM, EMERGENCY REPAIRS, AND KEEPING OF TEMPERATURE RECORDS. CONTINUOUS DIRECT ATTENDANCE SHALL MEAN DIRECT ATTENDANCE FOR TWENTY-FOUR HOURS EACH DAY, SEVEN DAYS PER WEEK, SATURDAYS, SUNDAYS AND HOLIDAYS INCLUDED, THROUGHOUT THE PROGRESS OF THE WORK.

F. IT SHALL BE THE SOLE RESPONSIBILITY OF THE GENERAL CONTRACTOR TO ARRANGE FOR AND PAY THE HVAC AND/OR ELECTRICAL GENERAL CONTRACTOR TO OPERATE AND TO PUT IN FIRST-CLASS CONDITION ALL PORTIONS OF THE PERMANENT HEATING SYSTEM USED FOR HEATING DURING CONSTRUCTION. THE COMMONWEALTH WILL REQUIRE THE DISCHARGE OF INEXPERIENCED OR UNSATISFACTORY OPERATING LABOR.

G. IF THE SYSTEM IS ELECTRIC HEAT, THE FOREGOING REQUIREMENTS SHALL EQUALLY APPLY TO ALL THE COMPARABLE COMPONENTS THEREOF.

H. THE INSTALLATION AND OPERATION OF HEATING DEVICES SHALL COMPLY WITH ALL SAFETY REGULATIONS INCLUDING PROVISIONS FOR ADEQUATE VENTILATION AND FIRE PROTECTION. HEATING DEVICES WHICH MAY CAUSE DAMAGE TO FINISH SURFACES SHALL NOT BE USED.

1.6 TEMPORARY POWER

A. THE UTILITY COMPANY WILL PROVIDE ELECTRICAL ENERGY REQUIRED FOR TEMPORARY LIGHT AND POWER. THE ELECTRICAL SUBCONTRACTOR IS REQUIRED UNDER SECTION 260001 - ELECTRICAL WORK, TO PROVIDE TEMPORARY FEEDERS OF SUFFICIENT CAPACITY FROM THE LOCAL UTILITY COMPANY, OR FROM THE INSTITUTION POWER LINES, AT THE POINT DESIGNATED ON THE DRAWINGS, TO PROVIDE FOR THE ELECTRIC LIGHT AND POWER REQUIREMENTS OF THE PROJECT WHILE UNDER CONSTRUCTION AND UNTIL THE PERMANENT FEEDERS HAVE BEEN INSTALLED AND ARE IN OPERATION. IT IS NOT THE INTENT OF THE ABOVE STATEMENT TO RELIEVE THE GENERAL CONTRACTOR OF THE RESPONSIBILITY OF PAYMENT FOR ENERGY CONSUMED DURING CONSTRUCTION, BUT RATHER TO AFFORD HIM USE OF PERMANENT FEEDER, ETC. FOR ELECTRIC DISTRIBUTION DURING CONSTRUCTION. PAYMENT FOR ENERGY CONSUMED DURING CONSTRUCTION SHALL BE THE RESPONSIBILITY OF THE GENERAL CONTRACTOR UNTIL EITHER USE AND OCCUPANCY OR FINAL ACCEPTANCE HAS OCCURRED.

B. THE GENERAL CONTRACTOR SHALL PAY FOR THE COST OF ELECTRIC ENERGY CONSUMED BY HIMSELF AND BY ALL OF HIS SUBCONTRACTORS. ANY TEMPORARY WIRING OF A SPECIAL NATURE, OTHER THAN THAT SPECIFIED IN SECTION 260001 - ELECTRICAL WORK, SHALL BE PAID FOR BY THE SUBCONTRACTOR REQUIRING IT, SUCH AS:

1. SPECIAL CIRCUITS REQUIRED BY ELECTRIC WELDERS, ELEVATORS, LIFTS OR OTHER SPECIAL EQUIPMENT REQUIRING HIGH-AMPERAGE AND/OR SPECIAL VOLTAGE SERVICE, ETC.
2. EXTERIOR LIGHTING CIRCUITS FOR PROTECTION AGAINST VANDALISM, PUBLIC WARNING LIGHTS, LIGHTS FOR ADVERTISING, AND SIMILAR ITEMS.

C. THE GENERAL CONTRACTOR AND ALL SUBCONTRACTORS, INDIVIDUALLY, SHALL FURNISH ALL EXTENSION CORDS, SOCKETS, MOTORS, AND ACCESSORIES REQUIRED FOR THEIR WORK. THEY SHALL ALSO PAY FOR ALL TEMPORARY WIRING OF CONSTRUCTION OFFICES AND BUILDINGS USED BY THEM. THE GENERAL CONTRACTOR SHALL PAY FOR THE OFFICES OF THE GENERAL CONTRACTOR AND THE RESIDENT ENGINEER SPECIFIED IN THE CONTRACT FORM.

D. ALL TEMPORARY WIRING INSTALLED BY THE ELECTRICAL SUBCONTRACTOR SHALL BE REMOVED AFTER IT HAS SERVED ITS PURPOSE. USE COPPER WIRE ONLY.

E. ALL RELOCATIONS OF TEMPORARY SERVICE TO MEET CONSTRUCTION AND/OR PHASING REQUIREMENTS SHALL BE PERFORMED AT NO ADDITIONAL COST TO THE COMMONWEALTH.

1.7 HOISTING EQUIPMENT AND MACHINERY

A. ALL HOISTING EQUIPMENT AND MACHINERY REQUIRED FOR THE PROPER AND EXPEDITIOUS PROSECUTION AND PROGRESS OF THE WORK SHALL BE FURNISHED, INSTALLED, OPERATED AND MAINTAINED IN SAFE CONDITION BY THE INDIVIDUAL SUBCONTRACTORS AND IS SO STATED IN EACH APPROPRIATELY RELATED SECTION OF THE SPECIFICATIONS. ALL COSTS FOR HOISTING OPERATING SERVICES SHALL BE BORNE BY THE SUBCONTRACTORS UNLESS SPECIFICALLY EXCEPTED IN THE CONTRACT DOCUMENTS.
1. A LICENSED EQUIPMENT MANUFACTURER'S REPRESENTATIVE SHALL BE PRESENT AT ALL TIMES, TO WITNESS THE ERECTION AND DISMANTLING OF ALL HOISTING EQUIPMENT AND MACHINERY, WHENEVER SUCH EQUIPMENT IS BEING ERECTED OR DISMANTLED. NO SUCH WORK WILL BE PERFORMED WITHOUT THE PRESENCE OF SUCH REPRESENTATIVE.
2. HOISTING EQUIPMENT AND MACHINERY ERECTION AND DISMANTLING SHALL BE PERFORMED ONLY BY TRAINED, CERTIFIED, AND EXPERIENCED RIGGERS QUALIFIED TO PERFORM SUCH WORK.
3. COPIES OF SUCH LICENSES AND/OR CERTIFICATIONS, CLEARLY INDICATING QUALIFICATIONS, SHALL BE PROVIDED TO THE DCAM RESIDENT ENGINEER PRIOR TO COMMENCEMENT OF SUCH ERECTING AND DISMANTLING WORK.

B. REVIEW DRAWINGS FOR HOISTING REQUIREMENTS AND OPENNESS OF TRAFFIC ACCESS ROUTES TO INSTALLED DESTINATIONS OF SPECIFIED EQUIPMENT AND FURNISHINGS.

1.8 STAGING

A. ALL STAGING, PLANKING AND SCAFFOLDING, EXTERIOR AND INTERIOR, REQUIRED FOR THE PROPER EXECUTION OF THE WORK AND OVER EIGHT FEET IN HEIGHT, SHALL BE FURNISHED, INSTALLED, AND MAINTAINED BY THE GENERAL CONTRACTOR .

1. ERECTION AND DISMANTLING OF STAGING SHALL BE PERFORMED ONLY BY TRAINED, CERTIFIED, AND EXPERIENCED STAGING PERSONNEL QUALIFIED TO PERFORM SUCH WORK.
2. COPIES OF SUCH CERTIFICATIONS, CLEARLY INDICATING QUALIFICATIONS, SHALL BE PROVIDED TO THE DCAM RESIDENT ENGINEER PRIOR TO COMMENCEMENT OF SUCH ERECTING AND DISMANTLING WORK.

B. ALL STAGING UP TO EIGHT FEET IN HEIGHT SHALL BE PROVIDED BY THE INDIVIDUAL SUBCONTRACTORS AS APPLICABLE TO THEIR WORK.

1.9 MAINTENANCE OF ACCESS

A. THE GENERAL CONTRACTOR SHALL PROVIDE AND MAINTAIN FOR THE DURATION OF HIS CONTRACT, A MEANS OF ACCESS TO, AROUND AND WITHIN THE SITE, AS INDICATED ON THE CONTRACT DRAWINGS, FOR VEHICULAR TRAFFIC AND AUTHORIZED PERSONNEL. THIS MEANS OF ACCESS SHALL BE CONSTRUED TO SUSTAIN THE WEIGHT OF EQUIPMENT CUSTOMARILY ENGAGED FOR USE IN CONSTRUCTION PROJECTS OF THIS TYPE AND MAGNITUDE. THE GENERAL CONTRACTOR SHALL, WITHOUT ADDITIONAL COMPENSATION FROM THE COMMONWEALTH, FURNISH LABOR AND MATERIALS AS MAY BE REQUIRED FROM TIME TO TIME TO MAINTAIN THIS MEANS OF ACCESS IN AN ACCEPTABLE CONDITION AS DETERMINED BY THE DESIGNER. PEDESTRIAN ACCESS SHALL PROVIDE ADEQUATE PROTECTION AGAINST FALLING DEBRIS, SLIPPAGE, ADEQUATE LIGHTING, WARNING AND DIRECTIONAL SIGNS, AND PROTECTION AGAINST CONSTRUCTION ACTIVITIES.

1.10 DUST CONTROL

A. THE GENERAL CONTRACTOR SHALL HAVE ALL SUBCONTRACTORS PROVIDE ADEQUATE MEANS FOR THE PURPOSE OF PREVENTING DUST CAUSED BY CONSTRUCTION OPERATIONS FROM CREATING A HAZARD, NUISANCE, AND FROM ENTERING ADJACENT OCCUPIED AREAS THROUGHOUT THE PERIOD OF THE CONSTRUCTION CONTRACT.

B. THIS PROVISION DOES NOT SUPERSEDE ANY SPECIFIC REQUIREMENTS FOR METHODS OF CONSTRUCTION OR APPLICABLE GENERAL CONDITIONS SET FORTH IN THE CONTRACT ARTICLES WITH ADDED REGARD TO PERFORMANCE OBLIGATIONS OF THE GENERAL CONTRACTOR.

1.11 NOISE CONTROL

A. COMPLY WITH REQUIREMENTS OF AUTHORITIES HAVING JURISDICTION. DEVELOP AND MAINTAIN A NOISE-ABATEMENT PROGRAM AND ENFORCE STRICT DISCIPLINE OVER ALL PERSONNEL TO KEEP NOISE TO A MINIMUM.

B. EXECUTE CONSTRUCTION WORK BY METHODS AND BY USE OF EQUIPMENT WHICH WILL REDUCE EXCESS NOISE.

1. EQUIP AIR COMPRESSORS WITH SILENCERS, AND POWER EQUIPMENT WITH MUFFLERS.
2. MANAGE VEHICULAR TRAFFIC AND SCHEDULING TO REDUCE NOISE.
3. NO HEAVY EQUIPMENT MAY BE STARTED OR IDLED BEFORE 7A.M.

1.12 INDOOR AIR QUALITY (IAQ) MANAGEMENT

A. MINIMIZE EXPOSURE OF BUILDING OCCUPANTS, INDOOR SURFACES, AND VENTILATION AIR DISTRIBUTION SYSTEMS TO ENVIRONMENTAL TOBACCO SMOKE. AT A MINIMUM, TAKE THE FOLLOWING MEASURES:

1. PROHIBIT SMOKING IN THE BUILDING.
2. LOCATE EXTERIOR DESIGNATED SMOKING AREAS AT LEAST 25 FEET AWAY FROM ENTRIES, OUTDOOR AIR INTAKES, AND OPERABLE WINDOWS.

B. THE GENERAL CONTRACTOR SHALL DEVELOP A CONSTRUCTION INDOOR AIR QUALITY MANAGEMENT PLAN FOR THIS PROJECT AND MEET REQUIREMENTS OF LEED EQ CR 3.1 AND 3.2.

C. DURING CONSTRUCTION: COMPLY WITH THE FOLLOWING REQUIREMENTS, PER LEED EQ CR. 3.1:

1. DURING CONSTRUCTION MEET OR EXCEED THE RECOMMENDED CONTROL MEASURES OF THE SHEET METAL AND AIR CONDITIONING NATIONAL CONTRACTORS ASSOCIATION (SMACNA) IAQ GUIDELINES FOR OCCUPIED BUILDINGS UNDER CONSTRUCTION, CHAPTER 3, NOVEMBER 2007.
2. PROTECT STORED ON-SITE AND INSTALLED ABSORPTIVE MATERIALS FROM MOISTURE DAMAGE.
3. IF THE DCAM PROJECT MANAGER AUTHORIZES THE USE OF PERMANENT HEATING, COOLING, AND VENTILATING SYSTEMS DURING CONSTRUCTION, INSTALL FILTER MEDIA HAVING A MINIMUM EFFICIENCY REPORTING VALUE (MERV) OF 8 ACCORDING TO ASHRAE 52.2 AT EACH RETURN-AIR INLET FOR THE AIR-HANDLING SYSTEM USED DURING CONSTRUCTION. REPLACE AIR FILTERS IMMEDIATELY PRIOR TO OCCUPANCY. REPLACEMENT AIR FILTERS SHALL HAVE A MERV 13 ACCORDING TO ASHRAE 52.2.

D. BEFORE OCCUPANCY: COMPLY WITH ONE OF THE FOLLOWING REQUIREMENTS, PER LEED EQ CR. 3.2:

1. OPTION 1 - FLUSH-OUT (OWNER-ENGAGED INDOOR-AIR-QUALITY TESTING):
   a. AFTER CONSTRUCTION ENDS, PRIOR TO OCCUPANCY AND WITH INTERIOR FINISHES INSTALLED, PERFORM A BUILDING FLUSH-OUT WITH NEW MINIMUM EFFICIENCY REPORTING VALUE (MERV) 13 FILTRATION MEDIA AT 100% OUTSIDE AIR. AFTER THE FLUSH-OUT, REPLACE THE FILTRATION MEDIA WITH NEW MERV 13 FILTRATION MEDIA, EXCEPT THE FILTERS SOLELY PROCESSING OUTSIDE AIR.
2. OPTION 2 - AIR QUALITY TESTING (GENERAL CONTRACTOR-ENGAGED INDOOR-AIR-QUALITY TESTING):
   a. CONDUCT A BASELINE INDOOR AIR QUALITY TESTING PROCEDURE CONSISTENT WITH THE UNITED STATES ENVIRONMENTAL PROTECTION AGENCY'S "COMPENDIUM OF METHODS FOR THE DETERMINATION OF AIR POLLUTANTS IN INDOOR AIR."

E. CONSTRUCTION INDOOR AIR QUALITY MANAGEMENT PLAN SUBMITTAL:

1. WITHIN 21 CALENDAR DAYS AFTER RECEIPT OF NOTICE TO PROCEED, THE GENERAL CONTRACTOR SHALL SUBMIT TO THE DCAM PROJECT MANAGER A FINALIZED CONSTRUCTION IAQ MANAGEMENT PLAN.
2. THE PROPOSED PLAN SHALL COMPLY WITH REQUIREMENTS OF LEED EQ CR 3.1 AND 3.2.
3. THE PROPOSED PLAN SHALL INCLUDE, BUT NOT BE LIMITED TO, THE FOLLOWING:
   a. PROTECTION OF VENTILATION SYSTEM COMPONENTS DURING CONSTRUCTION.
   b. CLEANING AND REPLACING CONTAMINATED VENTILATION SYSTEM COMPONENTS AFTER CONSTRUCTION, INCLUDING FILTRATION MEDIA.
   c. TEMPORARY VENTILATION.
   d. PROTECTION OF ABSORPTIVE MATERIALS FROM MOISTURE DAMAGE WHEN STORED ON-SITE AND AFTER INSTALLATION, INCLUDING EXTERIOR WALL RAIN PROTECTION.
   e. SEQUENCE OF FINISH INSTALLATION PLAN.
   f. SELECTION OF CLEANING PRODUCTS AND PROCEDURES TO BE USED DURING CONSTRUCTION AND FINAL CLEANING.
   g. SCHEDULE OF EMISSION TEST DATA RECORDED BY GENERAL CONTRACTOR'S TESTING LABORATORY.

F. TAKE SPECIAL CARE TO PREVENT ACCUMULATION OF MOISTURE ON MATERIALS AND WITHIN PACKAGING DURING DELIVERY, STORAGE, AND HANDLING TO PREVENT DEVELOPMENT OF MOLD AND MILDEW INSIDE PACKAGING AND ON PRODUCTS.

G. IMMEDIATELY REMOVE FROM SITE AND PROPERLY DISPOSE OF MATERIALS SHOWING SIGNS OF MOLD AND MILDEW, INCLUDING MATERIALS WITH MOISTURE STAINS.

H. IAQ PLAN IMPLEMENTATION:

1. IAQ MANAGER: THE GENERAL CONTRACTOR SHALL DESIGNATE AN ON-SITE PERSON RESPONSIBLE FOR INSTRUCTING WORKERS AND OVERSEEING AND DOCUMENTING RESULTS OF THE CONSTRUCTION IAQ MANAGEMENT PLAN FOR THE PROJECT.
2. DISTRIBUTION: THE GENERAL CONTRACTOR SHALL DISTRIBUTE COPIES OF THE CONSTRUCTION IAQ MANAGEMENT PLAN TO THE JOBSITE FOREMAN, EACH SUBCONTRACTOR, DCAM'S PROJECT MANAGER, AND THE DESIGNER.
3. INSTRUCTION: THE GENERAL CONTRACTOR SHALL PROVIDE ON-SITE INSTRUCTION OF APPROPRIATE PROCEDURES AND METHODS TO BE USED BY ALL PARTIES AT THE APPROPRIATE STAGES OF THE PROJECT.
4. PRECONDITIONING: ALLOW PRODUCTS, WHICH HAVE ODORS AND SIGNIFICANT VOC EMISSIONS, TO OFF-GAS IN A DRY, WELL-VENTILATED SPACE FOR SUFFICIENT PERIOD TO DISSIPATE ODORS AND EMISSIONS PRIOR TO DELIVERY TO PROJECT.
5. REMOVE CONTAINERS AND PACKAGING FROM MATERIALS PRIOR TO CONDITIONING TO MAXIMIZE OFF-GASSING OF VOCS.
6. CONDITION PRODUCTS IN VENTILATED WAREHOUSE OR OTHER BUILDING.
7. COORDINATE CONSTRUCTION IAQ MANAGEMENT PLAN WITH FINAL CLEANING.

1.13 ENCLOSURES

A. PROVIDE TEMPORARY, INSULATED, WEATHER TIGHT CLOSURES OF OPENINGS IN EXTERIOR SURFACES FOR PROVIDING ACCEPTABLE WORKING CONDITIONS AND PROTECTION FOR MATERIALS, ALLOWING FOR HEATING DURING CONSTRUCTION, AND PREVENTING ENTRY OF UNAUTHORIZED PERSONS. PROVIDE DOORS WITH SELF-CLOSING HARDWARE AND LOCKS.

B. ALL UTILITIES INCLUDING ELECTRIC DUCTS, CONDUITS, TELEPHONE LINES, SPRINKLERS, AND OTHER UTILITIES SHALL BE PROTECTED AGAINST DAMAGE FROM CONSTRUCTION ACTIVITY. THE GENERAL CONTRACTOR SHALL BE RESPONSIBLE FOR ALL DAMAGE TO THE UTILITIES FROM CONSTRUCTION AND SHALL REPAIR ALL SUCH DAMAGE AT NO ADDITIONAL COST TO DCAM.

1.14 CLEANING DURING CONSTRUCTION

A. UNLESS OTHERWISE SPECIFIED UNDER THE VARIOUS SECTIONS OF THE SPECIFICATIONS, THE GENERAL CONTRACTOR SHALL PERFORM CLEAN-UP OPERATIONS DURING CONSTRUCTION AS HEREIN SPECIFIED.

1. REFER TO SECTION 017419 - CONSTRUCTION WASTE MANAGEMENT AND DISPOSAL FOR ADDITIONAL REQUIREMENTS.

B. CONTROL ACCUMULATION OF WASTE MATERIALS AND RUBBISH; PERIODICALLY DISPOSE OF OFF-SITE IN A LEGAL MANNER. THE GENERAL CONTRACTOR SHALL BEAR ALL COSTS, INCLUDING FEES RESULTING FROM SUCH DISPOSAL.

C. CLEAN INTERIOR AREAS PRIOR TO START OF FINISH WORK AND MAINTAIN AREAS FREE OF DUST AND OTHER CONTAMINANTS DURING FINISH OPERATIONS.

D. MAINTAIN PROJECT IN ACCORDANCE WITH ALL LOCAL, COMMONWEALTH OF MASSACHUSETTS, AND FEDERAL REGULATORY REQUIREMENTS.

E. STORE VOLATILE WASTES IN COVERED METAL CONTAINERS, AND REMOVE FROM PREMISES.

F. PREVENT ACCUMULATION OF WASTES WHICH CREATE HAZARDOUS CONDITIONS.

G. PROVIDE ADEQUATE VENTILATION DURING USE OF VOLATILE OR NOXIOUS SUBSTANCES.

H. CONDUCT CLEANING AND DISPOSAL OPERATIONS TO COMPLY WITH LOCAL ORDINANCES AND ANTI-POLLUTION LAWS.

1. DO NOT BURN OR BURY RUBBISH AND WASTE MATERIALS ON SITE.

2. DO NOT DISPOSE OF VOLATILE WASTES SUCH AS MINERAL SPIRITS, OIL, OR PAINT THINNER IN STORM OR SANITARY DRAINS.
3. DO NOT DISPOSE OF WASTES INTO STREAMS OR WATERWAYS.
4. IDENTIFY POTENTIAL SOURCES OF CLEANING WATER RUNOFF AND PROPOSE ABATEMENT PROCEDURES.

I. USE ONLY THOSE MATERIALS WHICH WILL NOT CREATE HAZARDS TO HEALTH OR PROPERTY AND WHICH WILL NOT DAMAGE SURFACES.

J. USE ONLY THOSE CLEANING MATERIALS AND METHODS RECOMMENDED BY MANUFACTURER OF SURFACE MATERIALS TO BE CLEANED.

K. EXECUTE CLEANING TO ENSURE THAT THE BUILDINGS, THE SITES, AND ADJACENT PROPERTIES ARE MAINTAINED FREE FROM ACCUMULATIONS OF WASTE MATERIALS AND RUBBISH AND WINDBLOWN DEBRIS, RESULTING FROM CONSTRUCTION OPERATIONS.

L. PROVIDE ON-SITE CONTAINERS FOR COLLECTION OF WASTE MATERIALS, DEBRIS, AND RUBBISH.

M. REMOVE WASTE MATERIALS, DEBRIS AND RUBBISH FORM THE SITE PERIODICALLY AND DISPOSE OF AT LEGAL DISPOSAL DUMP SITE (DEP APPROVED).

N. HANDLE MATERIAL IN A CONTROLLED MANNER WITH AS FEW HANDLINGS AS POSSIBLE. DO NOT DROP OR THROW MATERIALS FROM HEIGHTS.

O. SCHEDULE CLEANING OPERATIONS SO THAT DUST AND OTHER CONTAMINANTS RESULTING FROM CLEANING PROCESS WILL NOT DAMAGE SURROUNDING SURFACES.

1.15 FIELD OFFICES

A. THE GENERAL CONTRACTOR SHALL PROVIDE AND MAINTAIN TEMPORARY FIELD OFFICES. THE GENERAL CONTRACTOR'S FIELD OFFICE AND THE DCAM FIELD OFFICE SHALL BE ADJACENT TO EACH OTHER. PROVIDE AN UNCOVERED CONNECTION POINT, VIA A RAISED PLATFORM, TO CONNECT AT LEAST ONE ENTRY/EGRESS DOOR OF THE GENERAL CONTRACTOR FIELD OFFICE AND THE DCAM FIELD OFFICE.

B. THE GENERAL CONTRACTOR SHALL PROVIDE A SUITABLE FIELD OFFICE ON SITE FOR ITS OWN USE. THE LOCATION SHALL BE AT THE DISCRETION OF THE DCAM PROJECT MANAGER AND THE USER AGENCY.

C. PROVIDE A SEPARATE CONFERENCE ROOM SPACE WITH CONFERENCE TABLE AND CHAIRS TO ACCOMMODATE TWENTY (20) PERSONS AT ONE TIME.

D. IN ADDITION, THE GENERAL CONTRACTOR SHALL PROVIDE AN OFFICE IN A SEPARATE TRAILER OF NOT LESS THAN 1,600 SQUARE FEET ON THE SITE FOR THE DCAM PROJECT MANAGER. PROVIDE THE OFFICE WITH PARTITIONS TO SEPARATE IT FROM PUBLIC ACCESS, ELECTRIC LIGHT, HEAT, AIR CONDITIONING, WINDOW BLINDS AND WINDOW SCREENS. OFFICE SHALL PROVIDE FOUR PRIVATE OFFICE AREAS, A MEN'S AND A WOMEN'S TOILET FACILITY. PROVIDE TWO ENTRY/EGRESS DOORS TO THE EXTERIOR WITH CODE COMPLIANT ACCESS TO GRADE. PROVIDE AN INSULATED FLOOR AND SURROUND THE TRAILER WITH A CONTINUOUS SKIRT. THE LOCATION SHALL BE AT THE DISCRETION OF DCAM AND THE USER AGENCY.

1. PROVIDE TO THE DCAM PROJECT MANAGER FOR HIS/HER APPROVAL THE PROPOSED LAYOUT OF THE CONSTRUCTION TRAILER'S PUBLIC AREAS, PRIVATE OFFICE AREAS AND BATHROOM.
2. THE DCAM TEMPORARY OFFICE SHALL BE FULLY FUNCTIONAL, WITH ALL UTILITIES AND EQUIPMENT IN PLACE, WITHIN FIFTEEN (15) WORKING DAYS BEFORE THE DATE THAT THE GENERAL CONTRACTOR INTENDS TO BEGIN ANY ON-SITE ACTIVITIES.

3. THE GENERAL CONTRACTOR SHALL PROVIDE AND MAINTAIN A PORTABLE GENERATOR OF SUFFICIENT CAPACITY, IF NECESSARY, UNTIL A MORE PERMANENT AND RELIABLE SOURCE OF TEMPORARY POWER IS ESTABLISHED.
4. THE GENERAL CONTRACTOR SHALL PROVIDE A CODE COMPLIANT MEANS OF PROVIDING THE OFFICE WITH RELIABLE SERVICES FOR PORTABLE WATER SUPPLY AND SEWAGE DISPOSAL. PROVIDE SYSTEMS THAT ARE UNAFFECTED BY WEATHER.
5. THE GENERAL CONTRACTOR SHALL HIRE A CLEANING COMPANY TO PROVIDE WEEKLY CLEANING OF THE DCAM OFFICE TRAILER. THE WEEKLY CLEANING SHALL INCLUDE WASHING OF FLOORS, DUSTING OF ALL SURFACES AND EQUIPMENT IN ALL PUBLIC, ALL PRIVATE OFFICE AREAS AND BOTH TOILET FACILITIES (INCLUDING SANITIZING OF ALL TOILET AND SINK FIXTURES).

E. EQUIP THE DCAM PROJECT MANAGER'S OFFICE WITH THE FOLLOWING:

1. FIVE (5) LOCKABLE STEEL DESKS.
2. FIVE (5) SWIVEL CHAIRS WITH PADDED LOOP ARMS AND PNEUMATIC SEAT-HEIGHT ADJUSTMENT THAT RAISES AND LOWERS CHAIR
3. TWO (2) METAL PLAN RACKS.
4. FOUR (4) CONFERENCE TABLES, EACH NOT LESS THAN 3 FEET X 8 FEET.
5. TWENTY (20) CLOTH COVERED FOLDING CHAIRS.
6. ONE (1) DRAFTING TABLE, ONE (1) STOOL, AND ONE (1) ADJUSTABLE LAMP.
7. TWO (2) CONFETTI-CUT PAPER SHREDDERS.
8. ONE (1) ACCURATE FAHRENHEIT THERMOMETER.
9. REFER TO PARAGRAPH TELEPHONE SERVICE HEREIN FOR REQUIRED PHONE EQUIPMENT.
10. FOUR (4) FOUR DRAWER METAL FILE CABINETS WITH LOCKS.
11. FOUR (4) FIVE SHELF OPEN STEEL BOOK CASES (72"H X 34 1/2"W X 13"D)
12. SAMPLE SHELVING: MINIMUM 24 FEET OF 10" DEEP SHELF.
13. ONE (1) ELECTRIC WATER COOLER WITH DISPOSABLE CUPS AND WATER SUPPLY SERVICE (MONTHLY).
14. ONE (1) ELECTRIC COFFEE MAKER WITH SUPPLY SERVICE (COFFEE, SUGAR, CREAM, CUPS, STIRRERS, ETC. – MONTHLY).
15. ONE HARD HAT FOR EACH DCAM RESIDENT ENGINEER AND HAVE AVAILABLE, WITHIN THE DCAM OFFICE TRAILER, AT ALL TIMES AT LEAST TEN (10) VISITOR HARD HATS (RE-SUPPLY AS NECESSARY).
16. ONE (1) DRY PLAIN PAPER COLOR COPY MACHINE EQUAL TO FEATURES OF A XEROX 7242 WITH OPTIONAL SCAN FEATURES INCLUDING THE OPTIONAL NETWORK SCAN TO XEROX PC DESKTOP BUSINESS EDITION (5 SEAT LICENSE PRO VERSION), OPTIONAL TWO TRAY INPUT MODULE, OPTIONAL 802.1B/G CONNECTIVITY, AND OPTIONAL LANGUAGE SUPPORT OF ADOBE POSTSCRIPT 3.
    a. INITIALLY SUPPLY TWELVE (12) TONER/INK CARTRIDGES. THE GENERAL CONTRACTOR SHALL PROVIDE ADDITIONAL PRINTER TONER/INK CARTRIDGES, AS NEEDED BY THE DCAM PROJECT MANAGER THROUGHOUT THE DURATION OF THE PROJECT.
    b. COPIER SHALL BE ACCESSIBLE VIA AN INTRANET NETWORK TO ALL THREE BASIC WORKSTATIONS FOR PRINTING AND RECEIVING SCANS.
    c. AT THE CONVENIENCE OF THE DCAM PROJECT MANAGER, PROVIDE HIS/HER STAFF WITH ONE FULL DAY OF INSTRUCTION.
    d. PROVIDE MAINTENANCE SERVICE TO PROVIDE FOR FULL RESTORATION OF USABILITY WITHIN TWO (2) WORKING DAYS OF ANY REPORTED MALFUNCTION. IF THE COLOR COPY MACHINE IS FOUND TO BE UNREPAIRABLE, THEN WITHIN TWO WORKING DAYS IMMEDIATELY REPLACE WITH NEW.
    e. PROVIDE TO THE SATISFACTION OF AN AUTHORITY HAVING JURISDICTION SUPPLEMENTAL HEAT AND COOLING THAT MAY BE NECESSARY TO SATISFY THE COPY MACHINE'S OPERATING ENVIRONMENT REQUIREMENTS
17. THREE (3) ELECTRONIC CALCULATORS WITH PAPER PRINTOUT, INCLUDING TEN PAPER REFILLS, AND FIVE (5) ELECTRONIC SCIENTIFIC CALCULATORS.
18. THREE (3) DESKTOP STAPLERS WITH 25-SHEET CAPACITY. PROVIDE 25,000 STAPLES OF CHISEL POINT STAPLES.
19. ONE (1) SWINGLINE LIGHTTOUCH HEAVY-DUTY STAPLER FOR 120 SHEET CAPACITY. PROVIDE 25,000 SWINGLINE LIGHTTOUCH HEAVY DUTY STAPLES.
20. THIRTY-SIX (36) YELLOW HIGHLIGHTERS.
21. THIRTY-SIX (36) MECHANICAL PENCILS. PROVIDE A TOTAL OF 120 REFILL LEADS.
22. THIRTY-SIX (36) BLUE POINT PENS.

23. TEN (10) EACH OF WHITE WHITE-OUT CORRECTION FLUID AND GREEN WHITE-OUT CORRECTION FLUID.
24. FIVE (5) STAINLESS STEEL OFFICE SHEARS.
25. FORTY-EIGHT (48) LETTER SIZE WIDE RULED WRITING PADS.
26. TWO HUNDRED (200) LETTER SIZE-HANGING FOLDERS.
27. ONE (1) MICROWAVE OVEN.
28. ONE (1) REFRIGERATOR WITH A FREEZER SECTION, MIN 7.5 CU.FT. CAPACITY.
29. FOUR (4) FLASHLIGHTS WITH FOUR (4) SETS OF REQUIRED BATTERIES.
30. ONE (1) COAT RACK OR CLOSET.
31. SUFFICIENT QUANTITY OF ELECTRIC LIGHTS AND OUTLETS.
32. FIVE (5) DESK TASK LAMPS.
33. PAPER: 8 -1/2" X 11", 20 LB. (5,000 SHEETS – EVERY FOUR MONTHS).
34. PAPER: 8-1/2" X 14", 20 LB. (5,000 SHEETS – INITIALLY, THEN SUPPLY AS NEEDED DCAM PROJECT MANAGER.
35. PAPER: 11" X 17", 20 LB (5,000 SHEETS – INITIALLY, THEN SUPPLY AS NEEDED DCAM PROJECT MANAGER.
36. EQUIPMENT LISTED ABOVE SHALL BE INSTALLED AND MAINTAINED BY THE GENERAL CONTRACTOR UNTIL COMPLETION OF THIS CONTRACT. ANY PIECE OF EQUIPMENT (EXCLUDING THE COPY MACHINE; REFER TO SPECIFICATION PARAGRAPH 1.15.E.16.3) THAT BECOMES INOPERABLE SHALL BE REPLACED WITH NEW WITHIN TEN BUSINESS DAYS. ALL EQUIPMENT DEVICES AND ACCESSORIES SHALL BE RETURNED TO THE GENERAL CONTRACTOR.

F. COMPUTERS: THE GENERAL CONTRACTOR SHALL BE REQUIRED TO FURNISH (OR LEASE) AND INSTALL THE FOLLOWING ADDITIONAL OFFICE EQUIPMENT FOR DCAM'S PROJECT OFFICE FOR THE DURATION OF THE PROJECT. THE GENERAL CONTRACTOR SHALL INSTALL AND RENDER FULLY FUNCTIONAL ALL COMPUTER SYSTEM EQUIPMENT AND SOFTWARE, AS HEREINAFTER DEFINED AND SHALL BE RESPONSIBLE TO MAINTAIN AND/OR REPLACE ALL SUCH ITEMS AS MAY BECOME LOST, INOPERATIVE OR DAMAGED IN THE COURSE OF NORMAL USE. PROVIDE MAINTENANCE SERVICE TO PROVIDE FOR FULL RESTORATION OF USABILITY WITHIN TWO (2) WORKING DAYS OF ANY REPORTED MALFUNCTION. IF A BASIC WORKSTATION UNIT IS FOUND TO BE UNREPAIRABLE WITHIN TWO WORKING DAYS, THEN IMMEDIATELY REPLACE WITH NEW. AT THE COMPLETION OF THE PROJECT, THE GENERAL CONTRACTOR RETAINS OWNERSHIP OF THE EQUIPMENT.

1. BASIC WORKSTATION UNIT (THREE (3) UNITS REQUIRED) SHALL INCLUDE EACH OF THE FOLLOWING:
   a. INTEL 2.66GHZ OR HIGHER
   b. SYSTEM MEMORY (RAM) 4 GB DDR3 EXPANDABLE TO 12GB, PROVIDE 12GB
   c. 640GB HARD DRIVE—SATA (7200 RPM)
   d. GRAPHIC CARD ATI RADEON HD 4850 (MINIMUM 512 MB VIDEO MEMORY)
   e. INTEGRATED BUILT-IN 10/100/1000 ETHERNET LAN (RJ-45 CONNECTOR) COMPATIBLE WITH OPERATING SYSTEM.
   f. INTEGRATED SOUND CARD SHALL SUPPORT 7.1-CHANNEL
   g. 2.1 MULTIMEDIA SPEAKER SYSTEM WITH EXTERNAL POWER. MINIMUM 20 WATTS RMS
   h. INTERNAL DVD ± -READ AND REWRITABLE/CD- READ AND REWRITABLE; 16X8X16 DVD+RW; 16X6X16 DVD-RW; 48X4X48 CD-RW
   i. 19-IN-1 MEDIA CARD READER THAT SUPPORTS SMARTMEDIA, XD-PICTURE CARD, COMPACTFLASH I/II, MICRODRIVE, SECURE DIGITAL, SECURE DIGITAL HIGH CAPACITY, MINISD, MICROSD, MULTIMEDIACARD, MULTIMEDIACARD4 AND REDUCED-SIZE MULTIMEDIACARD (RS-MMC). ALSO SUPPORTS AND REDUCED-SIZE MULTIMEDIACARD4 (RS-MMC4), MULTIMEDIACARD MICRO, MEMORY STICK, MEMORY STICK PRO, MEMORY STICK DUO, MEMORY STICK PRO DUO AND MEMORY STICK MICRO
   j. EIGHT (8) HIGH-SPEED USB 2.0 PORTS (4 FRONT , 4 REAR) 2.0 USB PORTS
   k. TWO (2) FIREWIRE(IEEE1394A)PORTS (1 FRONT AND 1 REAR))
   l. ONE PARALLEL PORT.
   m. ONE (1) USB CABLED OPTICAL MOUSE WITH PAD.
   n. ONE (1) OPTICAL WIRELESS MOUSE.
   o. ONE (1) USB 101 KEY KEYBOARD.
   p. ONE (1) FLAT SCREEN MONITOR, 19 INCH OR GREATER, 1440X900 RESOLUTION COLOR MONITOR, ULTRAFAST 5 MS RESPONSE TIME, 1000:1 CONTRAST RATIO; 300 CD/M² BRIGHTNESS, HD-READY VIA DIGITAL DVI INPUT WITH HDCP; STANDARD

ANALOG WVGA INPUT 16:10 WIDESCREEN ASPECT RATIO. COMPATIBLE WITH THE GRAPHIC CARD. MINIMUM DOT PITCH 0.285MM. MEETS EPA ENERGY STAR CONSERVATION STANDARD (IMPLEMENTED IN HARDWARE)

q. LATEST VERSION OF WINDOWS PROFESSIONAL SYSTEM OPERATING SOFTWARE.
r. LATEST VERSION OF MICROSOFT PROFESSIONAL OFFICE SUITE.
s. LATEST VERSION OF ADOBE ACROBAT PROFESSIONAL.
t. LATEST VERSION OF ANTIVIRUS SOFTWARE (E.G. NORTON ANTIVIRUS, INCLUDING SUBSCRIPTION UPDATES FOR THE LIFE OF THE PROJECT)
u. LATEST VERSION OF ROXIO CREATOR SOFTWARE.
v. INTERNET SERVICE WITH A CONNECTION SPEED OF A MINIMUM RELIABLE 54 MBPS VIA A CABLE, DSL, FIOS, OR SATELLITE SERVICE. PROVIDE FOR THE DURATION OF THE PROJECT AN INTERNET CABLE OR DSL SERVICE PROVIDER.
w. ONE (1) FLATBED DIGITAL LASER COLOR COPIER/PRINTER/SCANNER WITH 35-PAGE AUTOMATIC DOCUMENT FEEDER (CAPABLE OF BOTH 8.5 X 11 AND 8.5 X 14), PARALLEL AND USB 2.0 FULL SPEED INTERFACES COMPATIBLE WITH BOTH WINDOWS AND MACINTOSH OPERATING SYSTEMS. 32MB OF INTERNAL MEMORY. BLACK AND WHITE PRINTING NOT LESS THAN UP TO 30 PPM AND COLOR PRINTING NOT LESS THAN 25 PPM. SEPARATE INK CARTRIDGES FOR BLACK AND COLOR. PHOTO QUALITY OUTPUT, UP TO 1200 X 2400 DPI FOR COLOR AND UP TO UP TO 1200-RENDERED DPI FOR BLACK. COPIER RESOLUTION UP TO 1200 X 1200 DPI. MULTIPLE COPIES UP TO 50. REDUCTION AND ENLARGEMENT 50% TO 400%. DUTY CYCLE UP TO 1,000 SHEETS PER MONTH. PROVIDE ASSOCIATED SOFTWARE.
    1) INITIALLY SUPPLY TWELVE (12) TONER/INK CARTRIDGES. THE GENERAL CONTRACTOR SHALL PROVIDE ADDITIONAL PRINTER TONER/INK CARTRIDGES, AS NEEDED BY THE DCAM PROJECT MANAGER THROUGHOUT THE DURATION OF THE PROJECT.
x. 200 CD AND 200 DVD RECORDABLE, AND, 100 CD AND 100 DVD REWRITABLE. PROVIDE 600 JEWEL CASES.
y. TEN (10) USB THUMB DRIVE WITH 4GB CAPACITY.
z. ONE (1) SURGE PROTECTOR OF 10 TOTAL OUTLETS, ALL WITH SURGE PROTECTION, 5 WITH BATTERY BACKUP; INCLUDES 2 BLOCK-SPACED; 750VA RATING WITH 450 WATTS OF POWER; 365-JOULE SURGE ENERGY RATING; PROVIDES UP TO 70 MINUTES OF BATTERY BACKUP IN CASE OF POWER FAILURE; HIGH-SPEED INTERNET SURGE PROTECTION, FAX, DSL, COAXIAL CABLE AND ETHERNET; FILE-SAVING, AUTO SHUTDOWN SOFTWARE (WINDOWS XP, USB CONNECTIVITY) INCLUDED RESETTABLE CIRCUIT BREAKER; RECHARGEABLE, REPLACEABLE BATTERY.
aa. FOR ALL OF THE ABOVE EQUIPMENT A PARTS, LABOR, ON-SITE WARRANTEE REPAIR/REPLACEMENT FOR THE DURATION OF THE PROJECT.

2. PROVIDE ADDITIONAL INTERNET CONNECTIVITY FOR A MINIMUM OF FIVE (5) CONCURRENT USERS. THE MINIMUM RELIABLE CONNECTION SPEED SHALL BE 54MBPS. THE INTENDED USE OF THESE ADDITIONAL INTERNET CONNECTIONS ARE TO ALLOW INTERNET ACCESS BY THE OTHER PROJECT TEAM MEMBERS USING THEIR OWN COMPUTERS.

G. PROVIDE THE DCAM PROJECT MANAGER'S OFFICE WITH THE LATEST EDITION OF THE FOLLOWING DOCUMENTS:

1. PROVIDE THE DCAM PROJECT MANAGER WITH TWO (2) COPIES OF THE EDITION (UPON WHICH THE CONTRACT DOCUMENTS WERE APPROVED) OF THE FOLLOWING DOCUMENTS:
    a. MASSACHUSETTS BUILDING CODE.
    b. MASSACHUSETTS FUEL, GAS AND PLUMBING CODE.
    c. MASSACHUSETTS ELECTRICAL CODE WITH NATIONAL ELECTRICAL CODE HANDBOOK.
    d. MASSACHUSETTS ELEVATOR CODE.
2. PROVIDE THE DCAM PROJECT MANAGER WITH ONE (1) COPY OF THE LATEST EDITION OF THE FOLLOWING DOCUMENTS:
    a. R. S. MEANS ESTIMATING BOOKS
        1) BUILDING CONSTRUCTION COST DATA.
        2) SITE WORK COST DATA.
        3) CONCRETE COST DATA.
        4) MECHANICAL COST DATA.

5) ELECTRICAL COST DATA.

b. NFPA 13, 13A, 14, 14A, 20, 70 AND 101 STANDARDS.

c. SMACNA (SHEET METAL AND AIR CONDITIONING NATIONAL ASSOCIATION): DESIGN MANUALS: DCS, DDT, IAQ, LTM, RCDC, RMAC, RNDC AND TAB.

d. COMPLETE SET OF CONTRACT DOCUMENTS, INCLUDING DRAWINGS AND SPECIFICATIONS.

H. THE GENERAL CONTRACTOR SHALL, ON A DAILY BASIS, MAINTAIN ALL OF THE OFFICES AND CONFERENCE SPACE TO BE CLEAN, ORDERLY, HEATED AND AIR CONDITIONED.

I. REFER TO PARAGRAPH 1.15.D.3 AND PARAGRAPH 1.16 FOR SANITARY FACILITIES REQUIREMENTS.

J. ONE DIGITAL CAMERA CAPABLE OF RECORDING IMAGES ON AN EXTERNAL MEMORY CARD.

1. CAMERA SHALL BE CAPABLE OF MINIMUM 10.0 MEGAPIXELS PHOTOS WITH A MINIMUM 3X OPTICAL ZOOM.
2. CAMERA SHALL ALSO BE CAPABLE OF RECORDING VIDEO WITH SOUND.
3. PROVIDE FOUR (4) COMPATIBLE 4-GIGABYTE MEMORY CARDS.
4. PROVIDE TWO (2) SETS OF COMPATIBLE RECHARGEABLE LITHIUM ION BATTERIES WITH BATTERY CHARGER.
5. ANY PIECE OF EQUIPMENT THAT BECOMES INOPERABLE SHALL BE REPLACED WITH NEW EQUIPMENT WITHIN 10 BUSINESS DAYS.

K. ONE 2 FOOT LONG ELECTRONIC ‘SMART LEVEL’ WITH AN ACCURACY OF 0.1 DEGREE.

1.16 TELEPHONE SERVICE

A. IN ADDITION TO ITS OWN TELEPHONE REQUIREMENTS, THE GENERAL CONTRACTOR SHALL PROVIDE AND MAINTAIN SEPARATE DIRECT LINE TELEPHONE SERVICE AT THE SITE IN COMPLIANCE WITH ARTICLE 111, PARAGRAPH 8 OF THE CONTRACT FORM AND THE FOLLOWING ADDITIONAL REQUIREMENTS. ANY PIECE OF EQUIPMENT THAT BECOMES INOPERABLE SHALL BE REPLACED WITH NEW EQUIPMENT WITHIN 10 BUSINESS DAYS.

1. PROVIDE AT LEAST ONE (1) COIN BOX TELEPHONE FOR THE USE OF THE WORKMEN ENGAGED IN THE WORK. THE LOCATION SHALL BE AT THE DISCRETION OF DCAM AND THE USER AGENCY.
2. PROVIDE FIVE (5) DEDICATED TELEPHONE LINES FOR THE DCAM PROJECT MANAGER AND THE FOLLOWING EQUIPMENT:
   a. FOUR (4) CORDLESS TELEPHONES WITH FOLLOWING FEATURES:
      1) KEYPAD IN BOTH BASE AND REMOTE UNITS.
      2) LAST NUMBER REDIAL.
      3) MINIMUM TEN (10) NUMBER MEMORY.
      4) SPEAKERPHONE IN THE HANDSET UNIT.
      5) DECT 6.0 SYSTEM WITH 1.9GHZ FREQUENCY.
      6) TELEPHONE PAGING UNITS.
      7) REPLACEMENT BATTERIES AS NEEDED.
   b. ONE (1) FAX MACHINE WITH MINIMUM 20-PAGE AUTO DOCUMENT FEEDER AND A MINIMUM 200 SHEET CAPACITY.
   c. ONE (1) ANSWERING MACHINE (CAN BE INTEGRAL UNIT OF ANOTHER CORDLESS TELEPHONE DEFINED ABOVE) WITH FOLLOWING FEATURES:
      1) VARIABLE ANNOUNCEMENT TIME, UP TO 30 MINUTES.
      2) REMOTE MESSAGE RETRIEVAL.
      3) MESSAGE MEMO WITH TIME/DATE STAMP.
      4) DIGITAL COUNTER.
3. PROVIDE EACH DCAM RESIDENT ENGINEER A CELL PHONE WITH SERVICES OF CALLER ID, CALL WAITING, CONFERENCING, VOICE MAIL, A DIRECT CONNECT FUNCTION COMPATIBLE WITH THE GENERAL CONTRACTOR’S SUPERINTENDENT(S) AND FIELD ENGINEER(S) CELL PHONE, AND THE RELATED SERVICE FOR THE LENGTH OF THE PROJECT. THE CELL PHONE SERVICE SHALL INCLUDE UNCONDITIONAL REPLACEMENT OF A LOST OR A DAMAGED CELL PHONE.

4. COMMUNICATIONS' SYSTEM MAINTENANCE AND REPLACEMENT SERVICE TO INSURE OPERATION THROUGHOUT THE CONTRACT PERIOD. MINIMUM NEXT DAY ON-SITE SERVICE REQUIRED.
5. EQUIPMENT LISTED ABOVE SHALL BE INSTALLED AND MAINTAINED BY THE GENERAL CONTRACTOR UNTIL COMPLETION OF THIS CONTRACT. ANY PIECE OF EQUIPMENT THAT BECOMES INOPERABLE SHALL BE REPLACED WITH NEW EQUIPMENT WITHIN 10 BUSINESS DAYS. ALL EQUIPMENT DEVICES AND ACCESSORIES SHALL BE RETURNED TO THE GENERAL CONTRACTOR.

B. PAY FOR THE INSTALLATION AND REMOVAL OF THE TEMPORARY TELEPHONES AND EQUIPMENT AND FOR ALL CALLS AND FIXED CHARGES IN CONNECTION THEREWITH.

1.17 SANITARY FACILITIES

A. THE GENERAL CONTRACTOR SHALL PROVIDE SUITABLE TOILET FACILITIES FOR ITS STAFF, THE RESIDENT ENGINEER AND THE DESIGNER, AND ADDITIONAL FACILITIES FOR THE WORKMEN ON THE JOB, INCLUDING PERSONNEL OF SUBCONTRACTORS.

B. THE RESIDENT ENGINEER'S TRAILER SHALL BE EQUIPPED WITH TOILET ROOM CONTAINING A WORKING CHEMICAL TOILET. IF POTABLE WATER AND SANITARY SEWERAGE IS AVAILABLE, A REGULAR TOILET MAY BE INSTALLED RATHER THAN A CHEMICAL TOILET. TRAILER SHALL NOT BE REMOVED FROM SITE UNTIL AT LEAST ONE TOILET ROOM IN NEW BUILDING IS OPERATIONAL.

C. PROVIDE CHEMICAL TOILETS WHERE WORK IS IN PROGRESS AND IN QUANTITY REQUIRED BY OSHA CODE.

D. CHEMICAL TOILETS AND THEIR MAINTENANCE SHALL MEET REQUIREMENTS OF STATE AND LOCAL HEALTH REGULATIONS AND ORDINANCES AND SHALL BE SUBJECT TO THE APPROVAL THE RESIDENT ENGINEER AND DESIGNER.

E. UPON COMPLETION OF NEW TOILET FACILITIES, THE DCAM PROJECT MANAGER MAY DESIGNATE A SPECIFIC TOILET AREA TO BE USED FOR THE GENERAL CONTRACTOR AND SUBCONTRACTORS ENGAGED IN THE WORK. HOWEVER, GENERAL CONTRACTOR SHALL TAKE RESPONSIBILITY FOR MAINTENANCE AND CLEANING OF SUCH AREAS AND SHALL LEAVE THEM IN FIRST CLASS CONDITION EQUAL TO THE ACCEPTED CONDITIONS OF TOILET FACILITIES NOT USED FOR CONSTRUCTION PERSONNEL.

1.18 CONSTRUCTION BARRIERS

A. PROPER CONSTRUCTION BARRIERS SHALL BE PROVIDED AROUND THE CONTRACT WORK AREAS AS DEFINED BY THE CONTRACT DRAWINGS OR AS DIRECTED BY THE RESIDENT ENGINEER.

B. CONSTRUCTION BARRIERS SHALL CONSIST OF TRAFFIC CONES, RIBBONS, TAPES, SECURE FENCING, TRENCH COVERS, WOOD BARRIERS, WARNING SIGNS, DIRECTIONAL SIGNS, AND OTHER TRAFFIC MATERIALS TO KEEP TRAFFIC AND PEOPLE FROM AREA OF CONSTRUCTION AND MAINTAIN ONGOING OPERATIONS.

C. BARRIERS SHALL BE ERECTED AT SUCH APPROVED LOCATIONS AS ARE NECESSARY, SUFFICIENTLY CROSS-BRACED AND SUPPORTED ADEQUATELY FROM FLOORS AND CEILINGS AS REQUIRED.

1.19 PARKING

A. ONLY DURING CONTRACT WORKING HOURS AND TO THE EXTENT AVAILABLE, EXISTING PARKING FACILITIES LOCATED AT THE CONSTRUCTION AREA WILL BE AVAILABLE FOR USE BY THE GENERAL CONTRACTOR, SUBCONTRACTORS AND THEIR EMPLOYEES. SUCH PARKING

AREAS SHALL BE DESIGNATED BY DCAM AND USER AGENCY. THE COMMONWEALTH SHALL NOT BE RESPONSIBLE FOR CARS, TRUCKS, ETC. OR THEIR CONTENTS AND THE GENERAL CONTRACTOR AND HIS SUBCONTRACTORS AND MATERIAL SUPPLIERS WILL USE THE DESIGNATED AREA WITH THIS UNDERSTANDING.

1.20 DEBRIS CONTROL AND REMOVAL

A. DEBRIS SHALL NOT BE PERMITTED TO ACCUMULATE OR MIGRATE AND THE WORK SHALL AT ALL TIMES BE KEPT SATISFACTORILY CLEAN. FACILITY TRASH RECEPTORS SHALL NOT BE USED FOR THE DISPOSAL OF DEBRIS. DUMPSTER SHALL BE PROVIDED BY THE GENERAL CONTRACTOR FOR REMOVAL OF DEBRIS FOR ALL SUBCONTRACTORS.

B. REMOVE DEBRIS FROM THE WORK SITE ON A DAILY BASIS AND DISPOSE OF SAME AT ANY (PRIVATE OR PUBLIC) DEP APPROVED DUMP THAT THE GENERAL CONTRACTOR MAY CHOOSE PROVIDING THAT THE GENERAL CONTRACTOR SHALL MAKE ALL ARRANGEMENTS AND OBTAIN ALL APPROVALS AND PERMITS NECESSARY FROM THE OWNER OR OFFICIALS IN CHARGE OF SUCH DUMPS. PROPOSED DUMP SITE SHALL BE SUBMITTED TO BE APPROVED BY DCAM PRIOR TO START OF DEMOLITION. DURING DISPOSAL PROCESS, COPIES OF DAILY RECEIPTS FROM DUMPSITE SHALL BE SUBMITTED ON A REGULAR BASIS.

1.21 SAFETY PROTECTION

A. AT NO TIME SHALL THE WORK BE LEFT UNATTENDED WITHOUT PROPER SAFETY PROTECTION AND SHALL NOT BE LEFT UNPROTECTED TO THE WEATHER AND ACCESSIBLE TO THE PUBLIC. IT IS THE RESPONSIBILITY OF THE GENERAL CONTRACTOR TO MAINTAIN PROPER SAFETY PROTECTION FOR THE PUBLIC WHILE WORK IS IN PROGRESS OR UNATTENDED.

1.22 VEHICLE AND EQUIPMENT PROTECTION

A. ALL CONSTRUCTION ACTIVITIES SHALL BE PERFORMED IN SUCH A MANNER SO AS NOT TO DUST, STAIN OR DAMAGE ANY BUILDING ELEMENTS, EQUIPMENT, VEHICLES, ETC. WITHIN GENERAL VICINITY OF THE CONSTRUCTION WORK AREA. ANY DAMAGE TO THESE ITEMS SHALL BE CLEANED AND REPAIRED AT THE EXPENSE OF THE GENERAL CONTRACTOR.

1. ALL CONSTRUCTION VEHICLES AND EQUIPMENT ON SITE SHALL BE EFFECTIVELY DISABLED AND SECURED WHEN NOT IN USE.

1.23 SHORING

A. THE SUBCONTRACTORS SHALL PROVIDE ALL TEMPORARY SHORING AND BRACING AS REQUIRED FOR THE PROPOSED WORK. COMPLY WITH ALL APPLICABLE CODES AND STANDARDS.

1.24 CONSTRUCTION FENCE

A. A CONSTRUCTION FENCE SHALL BE PROVIDED ALONG THE ENTIRE PERIMETER OF THE CONTRACT LIMIT LINES, AND SHALL BE KEPT IN GOOD REPAIR AT ALL TIMES, AND SHALL BE ARRANGED TO MAINTAIN ONGOING OPERATION'S ACCESS AND EGRESS.

B. CONSTRUCTION FENCES SHALL BE SIX FEET HIGH AND OF CHAIN LINK, OR APPROVED EQUAL, ERECTED IN A SUBSTANTIAL MANNER, STRAIGHT, PLUMB AND TRUE AS APPROVED BY THE DESIGNER.

C. GATES SHALL BE BUILT INTO FENCE AT SUCH APPROVED LOCATIONS AS ARE NECESSARY, WELL CROSS-BRACED AND HUNG ON HEAVY STRAP HINGES WITH PROPER POST AND HOOK

FOR DOUBLE GATES. PROVIDE HEAVY HASPS AND PADLOCKS FOR EACH GATE. PROVIDE A SET OF THREE KEYS FOR EACH LOCK TO DCAM PROJECT MANAGER AND RESIDENT ENGINEER TO FACILITATE EMERGENCY ACCESS.

D. FENCING SHALL BE REMOVED BY THE GENERAL CONTRACTOR AT NO COST TO THE COMMONWEALTH AT SUCH TIME BEFORE FINAL COMPLETION AS THE DESIGNER DIRECTS. RESTORE SITE TO ACCEPTABLE CONDITION AFTER REMOVING FENCE.

1.25 PROJECT IDENTIFICATION

A. REQUEST SKETCH OF SIGN LANGUAGE AND GRAPHICS FROM THE DCAM PROJECT MANAGER IN SUFFICIENT TIME THAT SIGN CAN BE FABRICATED AND ERECTED AT START OF CONSTRUCTION.

B. THE GENERAL CONTRACTOR SHALL PROVIDE ONE 6 FOOT HIGH BY 8 FOOT WIDE PROJECT SIGN AS INDICATED AND SPECIFIED FOLLOWING, CONFORMING TO DCAM REQUIREMENTS. SIGN SHALL BE FABRICATED FROM 1-INCH THICK MDO EXTERIOR GRADE PLYWOOD LAMINATED WITH WATERPROOF GLUE. EDGES OF SIGN SHALL BE BANDED WITH 1 INCH BY 1/2 INCH PRESSURE TREATED PINE BANDING. CONTACT THE DCAM PROJECT MANAGER FOR WORDING FOR THIS SPECIFIC PROJECT.

C. SIGN SHALL BE SUPPORTED BY TWO 4 BY 4 INCH POST SUPPORTS SET IN 12 INCH DIAMETER CONCRETE FOOTINGS TO A DEPTH OF FOUR FEET, SUCH THAT SIGN BOTTOM IS RAISED 4 FEET ABOVE GRADE. NAILS, BOLTS, AND CONNECTING HARDWARE SHALL BE GALVANIZED. PROVIDE ALTERNATIVE METHOD OF SUPPORT IF REQUIRED BY SITE CONDITIONS AND APPROVED BY THE DCAM PROJECT MANAGER.

D. SIGN SHALL BE LETTERED BY A PROFESSIONAL SIGN PAINTER, IN ACCORDANCE WITH THE GENERAL LAYOUTS ATTACHED. LETTERING SHALL BE GLOSS VINYL, SIZE, AND COLOR AS INDICATED AS ATTACHED. SURFACES AND EDGES OF SIGN SHALL RECEIVE TWO COATS OF EXTERIOR PRIMER AND TWO COATS OF EXTERIOR GLOSS ENAMEL.

E. SUBMIT A SHOP DRAWING INDICATED SIGN CONSTRUCTION AND LETTERING FOR APPROVAL BY THE DCAM PROJECT MANAGER. THE OFFICIAL PROJECT TITLE AND AN ELECTRONIC FILE OF THE ATTACHED SKETCHES IN AUTOCAD DRAWING FORMAT CAN BE PROVIDED TO THE GENERAL CONTRACTOR BY THE DCAM PROJECT MANAGER UPON REQUEST.

F. LOCATE AND INSTALL THE SIGN AT LOCATION DIRECTED BY THE DCAM PROJECT MANAGER. AT THE COMPLETION OF THE PROJECT, REMOVE THE SIGN AND SUPPORTS COMPLETELY AND RESTORE SURFACE TO ORIGINAL CONDITION.

PART 2 - PRODUCTS (NOT USED)

PART 3 - EXECUTION (NOT USED)

END OF SECTION

SECTION 016000

PRODUCT REQUIREMENTS

1.1 GENERAL PROVISIONS

A. ATTENTION IS DIRECTED TO THE CONTRACT AND GENERAL CONDITIONS AND ALL SECTIONS WITHIN DIVISION 01 - GENERAL REQUIREMENTS WHICH ARE HEREBY MADE A PART OF THIS SECTION OF THE SPECIFICATIONS.

1.2 REQUIREMENTS INCLUDED

A. PRODUCTS INCLUDE MATERIAL, EQUIPMENT, AND SYSTEMS.

B. COMPLY WITH SPECIFICATIONS AND REFERENCED STANDARDS AS MINIMUM REQUIREMENTS.

C. COMPONENTS REQUIRED TO BE SUPPLIED IN QUANTITY WITHIN A SPECIFICATION SECTION SHALL BE THE SAME, AND SHALL BE INTERCHANGEABLE.

D. DO NOT USE MATERIALS AND EQUIPMENT REMOVED FROM EXISTING STRUCTURES, EXCEPT AS SPECIFICALLY REQUIRED, OR ALLOWED, BY THE CONTRACT DOCUMENTS.

E. IN THE CASE OF AN INCONSISTENCY BETWEEN DRAWINGS AND THE PROJECT MANUAL, OR WITHIN EITHER DOCUMENT WHICH IS NOT CLARIFIED BY ADDENDUM, THE PRODUCT OF GREATER QUALITY OR GREATER QUANTITY OF WORK SHALL BE PROVIDED IN ACCORDANCE WITH THE DESIGNER'S INTERPRETATION.

1.3 WORKMANSHIP

A. COMPLY WITH INDUSTRY STANDARDS EXCEPT WHEN MORE RESTRICTIVE TOLERANCES OR SPECIFIED REQUIREMENTS INDICATE MORE RIGID STANDARDS OR MORE PRECISE WORKMANSHIP.

B. PERFORM WORK BY PERSONS QUALIFIED TO PRODUCE WORKMANSHIP OF SPECIFIED QUALITY.

C. SECURE PRODUCTS IN PLACE WITH POSITIVE ANCHORAGE DEVICES DESIGNED AND SIZED TO WITHSTAND STRESSES, VIBRATION, AND RACKING.

1.4 MANUFACTURERS' INSTRUCTIONS

A. WHEN WORK IS SPECIFIED TO COMPLY WITH MANUFACTURERS' INSTRUCTIONS, SUBMIT COPIES AS SPECIFIED IN SECTION 013300 - SUBMITTAL REQUIREMENTS, DISTRIBUTE COPIES TO PERSONS INVOLVED, AND MAINTAIN ONE SET IN FIELD OFFICE.

B. PERFORM WORK IN ACCORDANCE WITH DETAILS OF INSTRUCTIONS AND SPECIFIED REQUIREMENTS.

1.5 TRANSPORTATION AND HANDLING

A. REFER TO THE CONTRACT AND GENERAL CONDITIONS AND SPECIFICATIONS SECTIONS FOR REQUIREMENTS PERTAINING TO TRANSPORTATION AND HANDLING OF MATERIALS AND EQUIPMENT.

B. TRANSPORT PRODUCTS BY METHODS TO AVOID PRODUCT DAMAGE; DELIVER IN UNDAMAGED CONDITION IN MANUFACTURERS' LABELED AND UNOPENED CONTAINERS OR PACKAGING, DRY

C. PROVIDE EQUIPMENT AND PERSONNEL TO HANDLE PRODUCTS BY METHODS TO PREVENT SOILING OR DAMAGE.

D. PROMPTLY INSPECT SHIPMENTS TO ASSURE THAT PRODUCTS COMPLY WITH REQUIREMENTS, THAT QUANTITIES ARE CORRECT, AND PRODUCTS ARE UNDAMAGED.

1.6 STORAGE AND PROTECTION

A. REFER TO THE CONTRACT AND GENERAL CONDITIONS AND SPECIFICATIONS SECTIONS FOR REQUIREMENTS PERTAINING TO STORAGE AND PROTECTION OF MATERIALS AND EQUIPMENT.

B. STORE PRODUCTS IN ACCORDANCE WITH MANUFACTURERS' INSTRUCTION, WITH SEALS AND LABELS INTACT AND LEGIBLE. STORE SENSITIVE PRODUCTS IN WEATHER TIGHT ENCLOSURES; MAINTAIN WITHIN TEMPERATURE AND HUMIDITY RANGES REQUIRED BY MANUFACTURERS' INSTRUCTIONS.

C. FOR EXTERIOR STORAGE OF FABRICATED PRODUCTS, PLACE ON SLOPED SUPPORTS ABOVE GROUND. COVER PRODUCTS SUBJECT TO DETERIORATION WITH IMPERVIOUS SHEET COVERING; PROVIDE VENTILATION TO AVOID CONDENSATION.

D. STORE LOOSE GRANULAR MATERIALS ON SOLID SURFACES IN A WELL-DRAINED AREA; PREVENT MIXING WITH FOREIGN MATTER.

E. ARRANGE STORAGE TO PROVIDE ACCESS FOR INSPECTION. PERIODICALLY INSPECT TO ASSURE THAT PRODUCTS ARE UNDAMAGED, AND ARE MAINTAINED UNDER REQUIRED CONDITIONS.

F. PROTECT MASONRY AND STONE PRODUCTS FROM DAMAGE AND STAINING.

G. PROTECT FINISHED MATERIALS, INCLUDING WINDOW FRAMES AND DOORS, WITH PROTECTION ACCEPTABLE TO THE DCAM PROJECT MANAGER.

PART 2 - PRODUCTS (NOT USED)

PART 3 - EXECUTION (NOT USED)

END OF SECTION

SECTION 017418

DEMOLITION WASTE MANAGEMENT AND DISPOSAL

PART 1 - GENERAL

1.1 GENERAL PROVISIONS

A. ATTENTION IS DIRECTED TO THE CONTRACT AND GENERAL CONDITIONS AND ALL SECTIONS WITHIN DIVISION 01 - GENERAL REQUIREMENTS, WHICH ARE HEREBY MADE A PART OF THIS SECTION OF THE SPECIFICATIONS.

1.2 SUMMARY

A. THIS SECTION INCLUDES ADMINISTRATIVE AND PROCEDURAL REQUIREMENTS FOR RECYCLING AND DISPOSING OF DEMOLITION WASTE.

B. RELATED WORK: THE FOLLOWING ITEMS ARE NOT INCLUDED IN THIS SECTION AND WILL BE PERFORMED UNDER THE DESIGNATED SECTIONS:

1. SECTION 013543 - ENVIRONMENTAL PROTECTION PROCEDURES:
   a. ENVIRONMENTAL-PROTECTION MEASURES DURING CONSTRUCTION.
2. SECTION 017419 - CONSTRUCTION WASTE MANAGEMENT AND DISPOSAL
   a. ADDITIONAL REQUIREMENTS FOR ADDRESSING EXISTING MATERIALS IN RENOVATION AND/OR REMODELING PROJECTS; NOT APPLICABLE TO NEW CONSTRUCTION.
3. SECTION 018113 - SUSTAINABLE DESIGN REQUIREMENTS:
   a. ADDITIONAL LEED REQUIREMENTS
4. SECTION 311000 - SITE CLEARING:
   a. SITE CLEARING, GRUBBING, AND CHIPPING ACTIVITIES

1.3 DEFINITIONS

A. ASPHALT PAVEMENT, BRICK, AND CONCRETE (ABC) RUBBLE: RUBBLE THAT CONTAINS ONLY WEATHERED (CURED) ASPHALT PAVEMENT, CLAY BRICKS AND ATTACHED MORTAR NORMALLY USED IN CONSTRUCTION, OR CONCRETE THAT MAY CONTAIN REBAR. THE RUBBLE SHALL NOT BE MIXED WITH, OR CONTAMINATED BY, ANOTHER WASTER OR DEBRIS.

B. DEMOLITION WASTE: BUILDING AND SITE IMPROVEMENT MATERIALS RESULTING FROM DEMOLITION OR SELECTIVE DEMOLITION OPERATIONS.

C. DISPOSAL: REMOVAL OFF-SITE OF DEMOLITION WASTE AND SUBSEQUENT SALE, RECYCLING, REUSE, OR DEPOSIT IN LANDFILL OR INCINERATOR ACCEPTABLE TO AUTHORITIES HAVING JURISDICTION.

D. RECYCLE: RECOVERY OF DEMOLITION OR CONSTRUCTION WASTE FOR SUBSEQUENT PROCESSING IN PREPARATION FOR REUSE.

E. SALVAGE: RECOVERY OF DEMOLITION OR CONSTRUCTION WASTE AND SUBSEQUENT SALE OR REUSE IN ANOTHER FACILITY.

F. SALVAGE AND REUSE: RECOVERY OF DEMOLITION OR CONSTRUCTION WASTE AND SUBSEQUENT INCORPORATION INTO THE WORK.

1.4 PERFORMANCE REQUIREMENTS

A. GENERAL: DEVELOP WASTE MANAGEMENT PLAN THAT RESULTS IN END-OF-PROJECT RATES FOR SALVAGE/RECYCLING OF 75 PERCENT BY WEIGHT OF TOTAL WASTE GENERATED BY THE WORK.

B. SALVAGE/RECYCLE REQUIREMENTS: SALVAGE AND RECYCLE AS MUCH NON-HAZARDOUS DEMOLITION AND CONSTRUCTION WASTE AS POSSIBLE INCLUDING THE FOLLOWING MATERIALS:

1. ASPHALTIC CONCRETE PAVING.
2. CONCRETE AND CONCRETE REINFORCING STEEL.
3. BRICK AND CONCRETE MASONRY UNITS.
4. COATED BRICK, CONCRETE, AND CONCRETE MASONRY UNITS. COATINGS SHALL INCLUDE, BUT NOT BE LIMITED TO: PAINT, STUCCO APPLICATIONS, PLASTER, ETC..
5. WOOD STUDS, WOOD JOISTS, PLYWOOD, ORIENTED STRAND BOARD, PANELING AND TRIM.
6. CASEWORK AND CABINETRY.
7. STRUCTURAL STEEL, MISCELLANEOUS STEEL AND ROUGH HARDWARE.
8. ROOFING.
9. INSULATION.
10. DOORS, DOOR FRAMES AND DOOR HARDWARE.
11. WINDOWS, GLASS, PLASTIC AND GLAZING.
12. METAL STUDS.
13. GYPSUM BOARD.
14. ACOUSTICAL TILE AND PANELS.
15. CARPET AND CARPET PAD.
16. DEMOUNTABLE PARTITIONS.
17. EQUIPMENT.
18. PLUMBING FIXTURES, PIPING, SUPPORTS, HANGERS, VALVES, AND SPRINKLERS.
19. MECHANICAL EQUIPMENT AND REFRIGERANTS.
20. ELECTRICAL CONDUIT, COPPER WIRING, LIGHTING FIXTURES, LAMPS, AND BALLASTS.
21. ELECTRICAL DEVICES, SWITCHGEAR, PANELBOARDS AND TRANSFORMERS.

C. IN THE EVENT THE GENERAL CONTRACTOR ENCOUNTERS PREVIOUSLY UNIDENTIFIED MATERIAL THAT IS REASONABLY BELIEVED TO BE HAZARDOUS, ASBESTOS CONTAINING, COATED WITH LEAD-BASED PAINT, OR OILY DEBRIS, THE GENERAL CONTRACTOR SHALL IMMEDIATELY STOP WORK IN THE AFFECTED AREA AND REPORT THE CONDITION TO THE DESIGNER AND DCAM. AT NO TIME SHALL SUCH MATERIAL BE HANDLED OR DISPOSED OF BY THE GENERAL CONTRACTOR. THE GENERAL CONTRACTOR AGREES TO COOPERATE WITH DCAM AND ANY CONSULTANTS ENGAGED BY DCAM TO PERFORM SERVICES WITH RESPECT TO THE ANALYSIS, DETECTION, REMOVAL, CONTAINMENT, TREATMENT, AND DISPOSAL OF SUCH REGULATED MATERIALS.

1.5 SUBMITTALS

A. WASTE MANAGEMENT PLAN (WMP): SUBMIT THREE COPIES OF PLAN WITHIN 30 DAYS OF DATE ESTABLISHED FOR THE NOTICE TO PROCEED, IN A FORMAT ACCEPTABLE TO THE DCAM PROJECT MANAGER.

B. WASTE REDUCTION PROGRESS REPORTS: CONCURRENT WITH EACH APPLICATION FOR PAYMENT, SUBMIT THREE COPIES OF REPORT. INCLUDE THE FOLLOWING INFORMATION:

1. MATERIAL CATEGORY.
2. GENERATION POINT OF WASTE.
3. TOTAL QUANTITY OF WASTE IN TONS.
4. QUANTITY OF WASTE SALVAGED, BOTH ESTIMATED AND ACTUAL IN TONS.
5. QUANTITY OF WASTE RECYCLED, BOTH ESTIMATED AND ACTUAL IN TONS.
6. TOTAL QUANTITY OF WASTE RECOVERED (SALVAGED PLUS RECYCLED) IN TONS.
7. TOTAL QUANTITY OF WASTE RECOVERED (SALVAGED PLUS RECYCLED) AS A PERCENTAGE OF TOTAL WASTE.

C. WASTE REDUCTION CALCULATIONS: BEFORE SUBMITTING A REQUEST FOR SUBSTANTIAL COMPLETION, SUBMIT THREE COPIES OF CALCULATED FINAL RATES FOR SALVAGE, RECYCLING, AND DISPOSAL AS A PERCENTAGE OF TOTAL WASTE GENERATED BY THE WORK.

D. FACILITY PERMITTING INFORMATION: FOR DISPOSAL AND INCINERATOR FACILITIES PROVIDE A COPY OF THE FACILITY'S CURRENT SOLID WASTE MANAGEMENT FACILITY PERMIT IN ACCORDANCE WITH 310 CMR 19.000.

E. FACILITY PERMITTING INFORMATION: FOR OFF-SITE ABC RUBBLE CRUSHING AND/OR RECYCLING FACILITIES, PROVIDE A STATEMENT FROM THE FACILITY THAT REFERENCES ITS SPECIFIC EXEMPTION FROM THE SOLID WASTE REGULATIONS (PER 310 CMR 16.05 (3) (E)) OR PROVIDE A COPY OF THE FACILITY'S CURRENT SOLID WASTE MANAGEMENT FACILITY PERMIT IN ACCORDANCE WITH 310 CMR 19.000.

F. RECORD KEEPING FOR RECYCLING AND LANDFILL AND/OR INCINERATOR DISPOSAL: DOCUMENTATION TO BE SUBMITTED BY THE CONTRACTOR SHALL INCLUDE THE FOLLOWING AS A CONDITION OF EACH PAYMENT:

1. RECYCLING AND PROCESSING FACILITY RECORDS: INDICATE RECEIPT AND ACCEPTANCE OF RECYCLABLE WASTE BY RECYCLING AND PROCESSING FACILITIES LICENSED TO ACCEPT THEM. INCLUDE MANIFESTS, WEIGHT TICKETS, AND/OR RECEIPTS.
2. LANDFILL AND INCINERATOR DISPOSAL RECORDS: INDICATE RECEIPT AND ACCEPTANCE OF WASTE BY LANDFILLS AND INCINERATOR FACILITIES LICENSED TO ACCEPT THEM. INCLUDE MANIFESTS, WEIGHT TICKETS, AND/OR RECEIPTS.

G. RECORDS OF DONATIONS: INDICATE RECEIPT AND ACCEPTANCE OF SALVAGEABLE WASTE DONATED TO INDIVIDUALS AND ORGANIZATIONS. INDICATE WHETHER ORGANIZATION IS TAX EXEMPT.

H. RECORDS OF SALES: INDICATE RECEIPT AND ACCEPTANCE OF SALVAGEABLE WASTE SOLD TO INDIVIDUALS AND ORGANIZATIONS. INDICATE WHETHER ORGANIZATION IS TAX EXEMPT.

I. QUALIFICATION DATA: THE REFRIGERANT RECOVERY TECHNICIAN SHALL BE CERTIFIED BY EPA-APPROVED CERTIFICATION PROGRAM AND SHALL PROVIDE A COPY OF CURRENT CERTIFICATION TO THE DESIGNER PRIOR TO STARTING WORK.

J. STATEMENT OF REFRIGERANT RECOVERY: THE REFRIGERANT RECOVERY TECHNICIAN RESPONSIBLE FOR RECOVERING REFRIGERANT SHALL PREPARE AND SIGN A DOCUMENT STATING THAT ALL REFRIGERANT THAT WAS PRESENT WAS RECOVERED AND THAT RECOVERY WAS PERFORMED ACCORDING TO EPA REGULATIONS AND USING EQUIPMENT THAT HAS A CURRENT EPA REGISTRATION. THE DOCUMENT SHALL INCLUDE THE NAME AND ADDRESS OF TECHNICIAN, DATE REFRIGERANT WAS RECOVERED, AMOUNT OF REFRIGERANT RECOVERED AND SHIPPED, AND DATE OF RECEIPT OF SHIPMENT BY THE RECLAIMER.

K. LEED SUBMITTALS: THE DESIGNER SHALL PREPARE A LETTER IN ACCORDANCE WITH LEED GUIDELINES, WHICH SHALL BE SIGNED BY THE GENERAL CONTRACTOR. THE GENERAL CONTRACTOR SHALL PROVIDE ALL INFORMATION REQUIRED WHICH INCLUDES A TABULATION OF TOTAL WASTE MATERIAL, QUANTITIES DIVERTED, AND MEANS BY WHICH IT IS DIVERTED.

1.6 QUALITY ASSURANCE

A. REFRIGERANT RECOVERY TECHNICIAN QUALIFICATIONS: THE REFRIGERANT RECOVERY TECHNICIAN WILL USE RECYCLING/RECOVERY EQUIPMENT THAT HAS A CURRENT EPA REGISTRATION.

B. REGULATORY REQUIREMENTS: COMPLY WITH HAULING AND DISPOSAL REGULATIONS OF AUTHORITIES HAVING JURISDICTION, INCLUDING BUT NOT LIMITED TO, MASSACHUSETTS SOLID WASTE REGULATIONS CONTAINED IN 310 CMR 16.00 AND 310 CMR 19.000.

1.7 WASTE MANAGEMENT PLAN

A. GENERAL: DEVELOP PLAN CONSISTING OF WASTE IDENTIFICATION, AND WASTE REDUCTION, HANDLING, TRANSPORTATION AND RECYCLING/DISPOSAL PROCEDURES. INCLUDE SEPARATE SECTIONS IN PLAN FOR RECYCLING AND DISPOSAL OF DEMOLITION WASTE. INDICATE QUANTITIES BY WEIGHT THROUGHOUT WASTE MANAGEMENT PLAN.

B. WASTE IDENTIFICATION: INDICATE ANTICIPATED TYPES AND QUANTITIES OF DEMOLITION AND SITE-CLEARING WASTE GENERATED BY THE WORK. INCLUDE ESTIMATED QUANTITIES AND ASSUMPTIONS FOR ESTIMATES.

C. WASTE REDUCTION PROGRAM: LIST EACH TYPE OF WASTE AND WHETHER IT WILL BE RECYCLED OR DISPOSED OF IN LANDFILL OR INCINERATOR. INCLUDE POINTS OF WASTE GENERATION, TOTAL QUANTITY OF EACH TYPE OF WASTE, QUANTITY FOR EACH MEANS OF RECOVERY, AND HANDLING AND TRANSPORTATION PROCEDURES.

1. RECYCLED MATERIALS: INCLUDE LIST OF LOCAL RECEIVERS AND PROCESSORS AND TYPE OF RECYCLED MATERIALS EACH WILL ACCEPT. INCLUDE NAMES, ADDRESSES, AND TELEPHONE NUMBERS.
2. DISPOSED MATERIALS: INDICATE HOW AND WHERE MATERIALS WILL BE DISPOSED OF. INCLUDE NAME, ADDRESS, AND TELEPHONE NUMBER OF EACH LANDFILL AND INCINERATOR FACILITY.
3. DONATED MATERIALS: INDICATE RECEIPT AND ACCEPTANCE OF SALVAGEABLE WASTE DONATED TO INDIVIDUALS AND ORGANIZATIONS. INDICATE WHETHER ORGANIZATION IS TAX EXEMPT. INCLUDE NAMES, ADDRESSES, AND TELEPHONE NUMBERS.
4. SOLD MATERIALS: INDICATE RECEIPT AND ACCEPTANCE OF SALVAGEABLE WASTE SOLD TO INDIVIDUALS AND ORGANIZATIONS. INDICATE WHETHER ORGANIZATION IS TAX EXEMPT. INCLUDE NAMES, ADDRESSES, AND TELEPHONE NUMBERS.

D. HANDLING AND TRANSPORTATION PROCEDURES: INCLUDE METHODS THAT WILL BE USED FOR SEPARATING RECYCLABLE WASTE INCLUDING SIZES OF CONTAINERS, CONTAINER LABELING, AND DESIGNATED LOCATION(S) ON PROJECT SITE WHERE MATERIALS SEPARATION WILL BE LOCATED.

E. WASTE MANAGEMENT COORDINATOR: IDENTIFY GENERAL CONTRACTOR EMPLOYEE WHO WILL BE THE WASTE MANAGEMENT COORDINATOR FOR THE PROJECT. THE WASTE MANAGEMENT COORDINATOR WILL BE RESPONSIBLE FOR IMPLEMENTING, MONITORING, AND REPORTING STATUS OF WASTE MANAGEMENT WORK PLAN.

PART 2 - PRODUCTS (NOT USED)

PART 3 - EXECUTION

3.1 PLAN IMPLEMENTATION

A. GENERAL: IMPLEMENT WASTE MANAGEMENT PLAN AS APPROVED BY THE DESIGNER. PROVIDE CONTAINERS, STORAGE, SIGNAGE, TRANSPORTATION, AND OTHER ITEMS AS REQUIRED TO IMPLEMENT WMP FOR THE ENTIRE DURATION OF THE CONTRACT.

B. THE GENERAL CONTRACTOR SHALL CONDUCT A WASTE MANAGEMENT MEETING AT THE SITE. THE GENERAL CONTRACTOR SHALL REVIEW METHODS AND PROCEDURES RELATED TO WASTE MANAGEMENT INCLUDING, BUT NOT LIMITED TO, THE FOLLOWING:

1. DISTRIBUTE APPROVED WMP TO EVERYONE CONCERNED WITHIN THREE DAYS OF APPROVED SUBMITTAL RETURN.
2. CLEARLY IDENTIFY THE WASTE MANAGEMENT COORDINATOR AND EXPLAIN THE COORDINATOR'S RESPONSIBILITIES.

3. REVIEW WMP WITH EACH SUBCONTRACTOR WHEN THEY FIRST BEGIN WORK ON-SITE. REVIEW PLAN PROCEDURES AND LOCATIONS ESTABLISHED FOR RECYCLING AND DISPOSAL.
4. REVIEW AND FINALIZE PROCEDURES FOR MATERIAL SEPARATION AND VERIFY AVAILABILITY OF CONTAINERS AND BINS NEEDED TO MAINTAIN PRODUCTION.
5. REVIEW PROCEDURES FOR PERIODIC WASTE COLLECTION AND TRANSPORTATION TO RECYCLING AND DISPOSAL FACILITIES.
6. PROVIDE RECYCLING EDUCATIONAL LITERATURE FOR ALL WORKERS, SUBCONTRACTORS, AND SUPPLIERS ENGAGED IN ON-SITE ACTIVITIES.
7. PROVIDE APPROPRIATE RECYCLING SIGNAGE FOR CONTAINERS AND WORKSPACES.

C. SITE ACCESS AND TEMPORARY CONTROLS: CONDUCT WASTE MANAGEMENT OPERATIONS TO ENSURE MINIMUM INTERFERENCE WITH ROADS, STREETS, WALKWAYS, AND OTHER ADJACENT OCCUPIED AND USED FACILITIES.

1. DESIGNATE AND LABEL SPECIFIC AREAS ON PROJECT SITE NECESSARY FOR SEPARATING MATERIALS THAT ARE TO BE SALVAGED, RECYCLED, REUSED, DONATED, SOLD, AND DISPOSED.
2. COMPLY WITH PROJECT REQUIREMENTS FOR CONTROLLING DUST AND DIRT, ENVIRONMENTAL PROTECTION, AND NOISE CONTROL.

3.2 SALVAGING DEMOLITION WASTE

A. SALVAGED ITEMS FOR SALE AND DONATION: SALE ACTIVITIES ARE NOT PERMITTED ON PROJECT SITE. LABOR FOR LOADING DONATED ITEMS ACCEPTABLE TO LOCAL TRADE PRACTICES; UNION LABOR IF APPLICABLE

3.3 RECYCLING DEMOLITION WASTE, GENERAL

A. GENERAL: RECYCLE PAPER AND BEVERAGE CONTAINERS USED BY ON-SITE WORKERS.

B. RECYCLING RECEIVERS AND PROCESSORS: AVAILABLE RECYCLING RECEIVERS AND PROCESSORS INCLUDE, BUT ARE NOT LIMITED TO, THOSE LISTED IN THE MASSACHUSETTS RECYCLING DIRECTORY, AVAILABLE FROM THE MASSACHUSETTS STATE BOOKSTORE (617-727-2834) LOCATED IN THE MASSACHUSETTS STATE HOUSE, FOR RECYCLING OPERATIONS WITHIN THE COMMONWEALTH OF MASSACHUSETTS.

C. PROCEDURES: SEPARATE RECYCLABLE WASTE FROM OTHER WASTE MATERIALS, TRASH, AND DEBRIS. SEPARATE RECYCLABLE WASTE BY TYPE AT PROJECT SITE TO THE MAXIMUM EXTENT PRACTICAL. FOR WASTE WHICH CANNOT BE SEPARATED AT PROJECT SITE, CO-MINGLE ONLY WITH WASTE WHICH IS TO BE SEPARATED LATER AT A RECYCLING FACILITY. CONTAMINATION OF RECYCLING CONTAINERS WITH TRASH OR OTHER CONTAMINANTS WILL BE ADDRESSED BY THE GENERAL CONTRACTOR AND WHO WILL BE SOLELY RESPONSIBLE FOR PAYMENT OF ALL FINES AND PENALTIES.

1. PROVIDE APPROPRIATELY MARKED CONTAINERS OR BINS FOR CONTROLLING RECYCLABLE WASTE UNTIL THEY ARE REMOVED FROM PROJECT SITE. INCLUDE LIST OF ACCEPTABLE AND UNACCEPTABLE MATERIALS AT EACH CONTAINER AND BIN. INSPECT CONTAINERS AND BINS FOR CONTAMINATION AND REMOVE CONTAMINATED MATERIALS IF FOUND.
2. STOCKPILE PROCESSED MATERIALS ON-SITE WITHOUT INTERMIXING WITH OTHER MATERIALS. PLACE, GRADE, AND SHAPE STOCKPILES TO DRAIN SURFACE WATER. COVER TO PREVENT WINDBLOWN DUST.
3. STOCKPILE MATERIALS AWAY FROM CONSTRUCTION AREA. DO NOT STORE WITHIN DRIP LINE OF REMAINING TREES.
4. STORE COMPONENTS OFF THE GROUND AND PROTECT FROM THE WEATHER.
5. REMOVE RECYCLABLE WASTE OFF USER AGENCY'S PROPERTY AND TRANSPORT TO RECYCLING RECEIVER OR PROCESSOR.

D. ON-SITE CRUSHING OF NON-COATED ASPHALT PAVEMENT, BRICK, AND CONCRETE (ABC) RUBBLE AS DESCRIBED IN 310 CMR 16.05, IS ALLOWED, PROVIDED PERFORMED IN ACCORDANCE WITH 310 CMR 16.05. ALL COATED ABC WASTE MUST BE TRANSPORTED OFF-SITE TO AN ASPHALT BATCHING PLANT OR TO AN ABC CRUSHING OR RECYCLING OPERATION THAT IS EITHER CONDITIONALLY EXEMPT FROM 310 CMR 16.00 OR HAS BEEN SITED AND PERMITTED IN ACCORDANCE WITH 310 CMR 16.00 AND 310 CMR 19.000, RESPECTIVELY.

3.4 RECYCLING DEMOLITION WASTE

A. ASPHALTIC CONCRETE PAVING: BREAK UP AND TRANSPORT PAVING TO ASPHALT-RECYCLING FACILITY.

B. CONCRETE: DEPOSIT ALL DEBRIS IN DESIGNATED CONTAINER TO BE TRANSPORTED TO APPROVED AGGREGATE RECYCLING FACILITY TO BE CRUSHED AND SCREENED FOR USE AS SATISFACTORY SOIL FOR FILL OR SUB-BASE.

C. MASONRY: DEPOSIT ALL MASONRY DEBRIS IN DESIGNATED CONTAINER TO BE TRANSPORTED TO APPROVED AGGREGATE RECYCLING FACILITY TO BE. CRUSHED AND SCREENED FOR USE AS SATISFACTORY SOIL FOR GENERAL FILL OR SATISFACTORY SOIL FOR FILL OR SUB-BASE. CLEAN AND STACK UNDAMAGED WHOLE MASONRY UNITS ON WOOD PALLETS FOR REUSE.

D. WOOD MATERIALS: SORT AND STACK SALVAGEABLE MEMBERS ACCORDING TO SIZE, TYPE, AND LENGTH. SEPARATE LUMBER WASTE AND DEPOSIT INTO APPROPRIATE CONTAINER. SEPARATE ENGINEERED WOOD PRODUCTS, PANEL PRODUCTS, AND TREATED WOOD MATERIALS INTO DESIGNATED CONTAINERS.

E. METALS: SEPARATE METALS BY MATERIAL TYPE IF PRACTICAL. STACK SALVAGEABLE STRUCTURAL STEEL MEMBERS ACCORDING TO SIZE, TYPE OF MEMBER, AND LENGTH.

F. ASPHALT SHINGLE ROOFING: ORGANIC AND GLASS-FIBER ASPHALT SHINGLES AND FELTS SHALL BE DISPOSED OF AT A FACILITY PERMITTED BY MASSACHUSETTS DEPARTMENT OF ENVIRONMENTAL PROTECTION (DEP) TO PROCESS POST-CONSUMER (USED) ASPHALT SHINGLES. RECYCLE NAILS, STAPLES ACCEPTABLE, FLASHING TRIM AND ACCESSORIES AS METALS.

1. ASBESTOS CONTAINING SHINGLES SHALL BE PRE-ABATED AND PROPERLY DISPOSED OF BY A MASSACHUSETTS LICENSED ASBESTOS ABATEMENT GENERAL CONTRACTOR, IN ACCORDANCE WITH ALL APPLICABLE REGULATIONS. ASBESTOS ABATEMENT WORK, INCLUDING DISPOSAL OF ASBESTOS CONTAIN MATERIALS, IS NOT INCLUDED IN THE SCOPE OF THE WORK AND WILL BE PERFORMED BY OTHERS.

G. GLASS: DEPOSIT GLASS DEBRIS INTO DESIGNATED CONTAINERS TO BE TRANSPORTED TO APPROVED GLASS-RECYCLING FACILITY.

H. PLASTICS: DEPOSIT PLASTIC CONTAINERS AND DEBRIS INTO DESIGNATED CONTAINERS TO BE TRANSPORTED TO APPROVED PLASTIC RECYCLING FACILITY.

I. GYPSUM BOARD: DEPOSIT SCRAPS OF GYPSUM BOARD INTO DESIGNATED CONTAINER PROTECTED FROM WEATHER AND TRANSPORT TO APPROPRIATE GYPSUM-RECYCLING FACILITY TO BE PROCESSED INTO SOIL AMENDMENT.

J. ACOUSTICAL CEILING PANELS AND TILE: DEPOSIT PULP ABLE MINERAL FIBER PANELS INTO DESIGNATED CONTAINER PROTECTED FROM WEATHER AND PREPARE FOR TRANSPORT, AS DIRECTED BY MANUFACTURER, TO APPROPRIATE RECYCLING FACILITY TO BE PROCESSED INTO NEW ACOUSTIC CEILING PANELS. SEPARATE SUSPENSION SYSTEM, TRIM, AND OTHER METALS FROM PANELS AND TILE AND SORT WITH OTHER METALS.

K. CARPET AND PAD: ROLL LARGE PIECES TIGHTLY AFTER REMOVING DEBRIS, TRASH, ADHESIVE, AND TACK STRIPS. STORE CLEAN, DRY CARPET AND PAD IN A CLOSED CONTAINER OR TRAILER PROVIDED BY CARPET RECLAMATION AGENCY OR CARPET RECYCLER.

L. EQUIPMENT: DRAIN TANKS, PIPING, AND FIXTURES. SEAL OPENINGS WITH CAPS OR PLUGS. PROTECT EQUIPMENT FROM EXPOSURE TO WEATHER.

M. PLUMBING FIXTURES: SEPARATE BY TYPE AND SIZE FIXTURES SUITABLE FOR REUSE. DEPOSIT ALL OTHER FIXTURES INTO DESIGNATED CONTAINERS BY MATERIAL TYPE TO BE TRANSPORTED TO APPROVED RECYCLING FACILITY.

N. PIPING: SEPARATE PIPING MATERIALS BY MATERIAL COMPOSITION. DEPOSIT IN DESIGNATED CONTAINERS. SEPARATE SUPPORTS, HANGERS, VALVES, SPRINKLERS, AND OTHER COMPONENTS BY MATERIAL TYPE AND DEPOSIT IN DESIGNATED CONTAINERS FOR TRANSPORT TO APPROVED RECYCLING FACILITY.

O. LIGHTING FIXTURES: SEPARATE LAMPS BY TYPE AND PROTECT FROM BREAKAGE.

P. ELECTRICAL DEVICES: SEPARATE SWITCHES, RECEPTACLES, SWITCHGEAR, TRANSFORMERS, METERS, PANELBOARDS, CIRCUIT BREAKERS, AND OTHER DEVICES BY TYPE.

Q. CONDUIT: DEPOSIT CONDUIT AND FITTINGS INTO DESIGNATED CONTAINER.

3.5 DISPOSAL OF WASTE

A. GENERAL: EXCEPT FOR ITEMS OR MATERIALS TO BE SALVAGED, RECYCLED, OR OTHERWISE REUSED, REMOVE WASTE MATERIALS FROM PROJECT SITE AND LEGALLY DISPOSE OF THEM IN A LANDFILL OR INCINERATOR ACCEPTABLE TO AUTHORITIES HAVING JURISDICTION.

1. EXCEPT AS OTHERWISE SPECIFIED, DO NOT ALLOW WASTE MATERIALS THAT ARE TO BE DISPOSED OF ACCUMULATE ON-SITE.
2. REMOVE AND TRANSPORT DEBRIS IN A MANNER THAT WILL PREVENT SPILLAGE ON ADJACENT SURFACES AND AREAS.
3. FOR SOLID WASTE DISPOSAL FACILITIES LOCATED IN THE COMMONWEALTH OF MASSACHUSETTS, DISPOSE OF MATERIALS ONLY IN FACILITIES WHICH CURRENTLY COMPLY WITH APPLICABLE STATE REGULATIONS, INCLUDING REQUIREMENTS OF 310 CMR 16.00 {SITE ASSIGNMENT FOR SOLID WASTE FACILITIES} AND 310 CMR 19.000 {SOLID WASTE MANAGEMENT}, AND LOCAL BYLAWS.

B. BURNING: DO NOT BURN WASTE MATERIALS.

C. DISPOSAL: TRANSPORT WASTE MATERIALS OFF THE OWNER'S PROPERTY AND LEGALLY DISPOSE OF THEM.

END OF SECTION

SECTION 017419

CONSTRUCTION WASTE MANAGEMENT AND DISPOSAL

PART 1 GENERAL

1.1 GENERAL PROVISIONS

A. ATTENTION IS DIRECTED TO THE CONTRACT AND GENERAL CONDITIONS AND ALL SECTIONS WITHIN DIVISION 01 - GENERAL REQUIREMENTS, WHICH ARE HEREBY MADE A PART OF THIS SECTION OF THE SPECIFICATIONS.

1.2 SUMMARY

A. THIS SECTION INCLUDES ADMINISTRATIVE AND PROCEDURAL REQUIREMENTS FOR RECYCLING AND DISPOSING OF CONSTRUCTION WASTE.

B. RELATED WORK: THE FOLLOWING ITEMS ARE NOT INCLUDED IN THIS SECTION AND WILL BE PERFORMED UNDER THE DESIGNATED SECTIONS:

1. SECTION 013543 - ENVIRONMENTAL PROTECTION PROCEDURES:
   a. ENVIRONMENTAL-PROTECTION MEASURES DURING CONSTRUCTION.
2. SECTION 017418 - DEMOLITION WASTE MANAGEMENT AND DISPOSAL
   a. ADDITIONAL REQUIREMENTS FOR ADDRESSING EXISTING MATERIALS IN RENOVATION AND/OR REMODELING PROJECTS; NOT APPLICABLE TO NEW CONSTRUCTION.
3. SECTION 018113 - SUSTAINABLE DESIGN REQUIREMENTS:
   a. ADDITIONAL LEED REQUIREMENTS
4. SECTION 311000 - SITE CLEARING:
   a. SITE CLEARING, GRUBBING, AND CHIPPING ACTIVITIES

1.3 DEFINITIONS

A. ASPHALT PAVEMENT, BRICK, AND CONCRETE (ABC) RUBBLE: RUBBLE THAT CONTAINS ONLY WEATHERED (CURED) ASPHALT PAVEMENT, CLAY BRICKS AND ATTACHED MORTAR NORMALLY USED IN CONSTRUCTION, OR CONCRETE THAT MAY CONTAIN REBAR. THE RUBBLE SHALL NOT BE MIXED WITH, OR CONTAMINATED BY, ANOTHER WASTE OR DEBRIS.

B. CONSTRUCTION WASTE: BUILDING AND SITE IMPROVEMENT MATERIALS AND OTHER SOLID WASTE RESULTING FROM CONSTRUCTION, AND/OR INSTALLATION OF NEW MATERIALS AS PART OF REMODELING, RENOVATION, OR REPAIR OPERATIONS. CONSTRUCTION WASTE INCLUDES PACKAGING.

   1. DEMOLITION WASTE: BUILDING AND SITE IMPROVEMENT MATERIALS RESULTING FROM DEMOLITION OR SELECTIVE DEMOLITION OPERATIONS PRIOR TO RENOVATIONS OR REMODELING.

C. DISPOSAL: REMOVAL OFF-SITE OF CONSTRUCTION WASTE AND SUBSEQUENT SALE, RECYCLING, REUSE, OR DEPOSIT IN LANDFILL OR INCINERATOR ACCEPTABLE TO AUTHORITIES HAVING JURISDICTION.

D. RECYCLE: RECOVERY OF DEMOLITION OR CONSTRUCTION WASTE FOR SUBSEQUENT PROCESSING IN PREPARATION FOR REUSE.

E. SALVAGE: RECOVERY OF DEMOLITION OR CONSTRUCTION WASTE AND SUBSEQUENT SALE OR REUSE IN ANOTHER FACILITY.

F. SALVAGE AND REUSE: RECOVERY OF DEMOLITION OR CONSTRUCTION WASTE AND SUBSEQUENT INCORPORATION INTO THE WORK.

1.4 PERFORMANCE REQUIREMENTS

A. GENERAL: DEVELOP A WASTE MANAGEMENT PLAN THAT STATES AS ITS OBJECTIVE TO ATTAIN AT PROJECT COMPLETION A RECYCLING RATE OF 75 PERCENT OR MORE BY WEIGHT OF THE TOTAL WASTE GENERATED BY THE WORK.

B. RECYCLING REQUIREMENTS:

1. MAXIMIZE RECYCLING OF NON-HAZARDOUS CONSTRUCTION WASTE INCLUDING THE FOLLOWING MATERIALS:
   a. SITE-CLEARING WASTE.
   b. MASONRY AND CMU.
   c. LUMBER, WOOD SHEET MATERIALS, AND WOOD TRIM.
   d. METALS.
   e. ROOFING.
   f. INSULATION.
   g. GLASS.
   h. PLASTICS.
   i. GYPSUM BOARD, REFER TO PARAGRAPH BELOW.
   j. ACOUSTICAL CEILING PANELS.
   k. CARPET AND PAD.
   l. PIPING.
   m. WIRE AND CABLE.
   n. ELECTRICAL CONDUIT.
   o. PACKAGING: 100 PERCENT OF THE FOLLOWING UNCONTAMINATED PACKAGING MATERIALS: PAPER, CARDBOARD, BOXES, PLASTIC SHEET AND FILM, POLYSTYRENE PACKAGING, WOOD CRATES, PLASTIC PAILS.
2. CLEAN GYPSUM BOARD WASTE: FOR NEW CONSTRUCTION AND RENOVATION PROJECTS INVOLVING 20,000 SQUARE FEET OR GREATER, DIVERT CLEAN (VIRGIN MATERIAL) GYPSUM BOARD WASTE FROM DISPOSAL TO RECYCLING AND/OR REUSE OUTLETS.
   a. FOR NEW CONSTRUCTION AND RENOVATION PROJECTS INVOLVING LESS THAN 20,000 SQUARE FEET, CONTRACTORS ARE ENCOURAGED TO DIVERT CLEAN GYPSUM BOARD WASTE FROM DISPOSAL TO RECYCLING AND/OR REUSE OUTLETS.
   b. CLEAN (VIRGIN MATERIAL) GYPSUM BOARD IS DEFINED AS MATERIAL WITHOUT ANY EXISTING ATTACHED MATERIAL, INCLUDING BUT NOT LIMITED TO ADHESIVES, MASTICS, AND PAINTS.
   c. FOR INFORMATION, CLEAN GYPSUM WASTE RECYCLING OUTLETS ARE INCLUDED IN THIS SECTION

1.5 SUBMITTALS

A. WASTE MANAGEMENT PLAN (WMP): SUBMIT 3 COPIES OF PLAN WITHIN 30 DAYS OF DATE ESTABLISHED FOR THE NOTICE TO PROCEED, IN A FORMAT ACCEPTABLE TO THE DCAM PROJECT MANAGER.

B. WASTE MANAGEMENT PROGRESS REPORTS: CONCURRENT WITH EACH APPLICATION FOR PAYMENT, SUBMIT THREE COPIES OF REPORT. THE FOLLOWING INFORMATION SHALL BE INCLUDED:

1. MATERIAL CATEGORY.
2. GENERATION POINT OF WASTE.
3. TOTAL QUANTITY OF WASTE IN TONS.
4. QUANTITY OF WASTE RECYCLED, BOTH ESTIMATED AND ACTUAL IN TONS.
5. TOTAL QUANTITY, OF WASTE RECOVERED (RECYCLED) AS A PERCENTAGE OF TOTAL WASTE.

C. WASTE MANAGEMENT CALCULATIONS: BEFORE SUBMITTING A REQUEST FOR SUBSTANTIAL COMPLETION, SUBMIT THREE COPIES OF CALCULATED FINAL RATES FOR RECYCLING AND DISPOSAL AS A PERCENTAGE OF TOTAL WASTE GENERATED BY THE WORK.

D. FACILITY PERMITTING INFORMATION: FOR LANDFILL AND/OR INCINERATOR FACILITIES, PROVIDE A COPY OF THE FACILITY'S CURRENT SOLID WASTE MANAGEMENT FACILITY PERMIT IN ACCORDANCE WITH 310 CMR 19.000.

E. RECORD KEEPING FOR RECYCLING AND LANDFILL AND/OR INCINERATOR DISPOSAL: DOCUMENTATION TO BE SUBMITTED BY THE GENERAL CONTRACTOR SHALL INCLUDE THE FOLLOWING:

1. RECYCLING AND PROCESSING FACILITY RECORDS: INDICATE RECEIPT AND ACCEPTANCE OF RECYCLABLE WASTE BY RECYCLING AND PROCESSING FACILITIES LICENSED TO ACCEPT THEM. INCLUDE MANIFESTS, WEIGHT TICKETS, AND/OR RECEIPTS.
2. LANDFILL AND INCINERATOR DISPOSAL RECORDS: INDICATE RECEIPT AND ACCEPTANCE OF WASTE BY LANDFILLS AND INCINERATOR FACILITIES LICENSED TO ACCEPT THEM. INCLUDE MANIFESTS, WEIGHT TICKETS, AND/OR RECEIPTS.

F. FACILITY PERMITTING INFORMATION: FOR ABC RUBBLE CRUSHING AND/OR RECYCLING FACILITIES, PROVIDE A STATEMENT FROM THE FACILITY THAT REFERENCES ITS SPECIFIC EXEMPTION FROM THE SOLID WASTE REGULATIONS (PER 310 CMR 16.05 (3) (E)) OR PROVIDE A COPY OF THE FACILITY'S CURRENT SOLID WASTE MANAGEMENT FACILITY PERMIT IN ACCORDANCE WITH 310 CMR 19.000.

G. RECORDS OF DONATIONS: INDICATE RECEIPT AND ACCEPTANCE OF SALVAGEABLE WASTE DONATED TO INDIVIDUALS AND ORGANIZATIONS. INDICATE WHETHER ORGANIZATION IS TAX EXEMPT.

H. RECORDS OF SALES: INDICATE RECEIPT AND ACCEPTANCE OF SALVAGEABLE WASTE SOLD TO INDIVIDUALS AND ORGANIZATIONS. INDICATE WHETHER ORGANIZATION IS TAX EXEMPT.

I. LEED SUBMITTALS: THE DESIGNER SHALL PREPARE A LETTER IN ACCORDANCE WITH LEED GUIDELINES, WHICH SHALL BE SIGNED BY THE GENERAL CONTRACTOR. THE GENERAL CONTRACTOR SHALL PROVIDE ALL INFORMATION REQUIRED WHICH INCLUDES A TABULATION OF TOTAL WASTE MATERIAL, QUANTITIES DIVERTED, AND MEANS BY WHICH IT IS DIVERTED.

1.6 QUALITY ASSURANCE

A. REGULATORY REQUIREMENTS: COMPLY WITH HAULING AND DISPOSAL REGULATIONS OF AUTHORITIES HAVING JURISDICTION, INCLUDING BUT NOT LIMITED TO, MASSACHUSETTS SOLID WASTE REGULATIONS CONTAINED IN 310 CMR 16.00 AND 310 CMR 19.000.

1.7 WASTE MANAGEMENT PLAN

A. GENERAL: DEVELOP PLAN CONSISTING OF WASTE IDENTIFICATION, AND WASTE REDUCTION, HANDLING, TRANSPORTATION, AND RECYCLING/DISPOSAL PROCEDURES. INCLUDE SEPARATE SECTIONS IN PLAN FOR RECYCLING AND DISPOSAL OF CONSTRUCTION WASTE. INDICATE QUANTITIES BY WEIGHT THROUGHOUT WASTE MANAGEMENT PLAN.

B. WASTE IDENTIFICATION: INDICATE ANTICIPATED TYPES AND QUANTITIES OF SITE-CLEARING AND CONSTRUCTION WASTE GENERATED BY THE WORK. INCLUDE ESTIMATED QUANTITIES AND ASSUMPTIONS FOR ESTIMATES.

C. WASTE REDUCTION PROGRAM: LIST EACH TYPE OF WASTE AND WHETHER IT WILL BE RECYCLED OR DISPOSED IN A LANDFILL OR INCINERATOR. INCLUDE POINTS OF WASTE GENERATION, TOTAL QUANTITY BY WEIGHT OF EACH TYPE OF WASTE, QUANTITY FOR EACH MEANS OF RECOVERY, AND HANDLING AND TRANSPORTATION PROCEDURES.

1. RECYCLED MATERIALS: INCLUDE LIST OF LOCAL RECEIVERS AND PROCESSORS AND TYPE OF RECYCLED MATERIALS EACH WILL ACCEPT. INCLUDE NAMES, ADDRESSES, AND TELEPHONE NUMBERS.
2. DISPOSED MATERIALS: INDICATE HOW AND WHERE MATERIALS WILL BE DISPOSED OF. INCLUDE NAME, ADDRESS, AND TELEPHONE NUMBER OF EACH LANDFILL AND INCINERATOR FACILITY.
3. DONATED MATERIALS: INDICATE RECEIPT AND ACCEPTANCE OF SALVAGEABLE WASTE DONATED TO INDIVIDUALS AND ORGANIZATIONS. INDICATE WHETHER ORGANIZATION IS TAX EXEMPT. INCLUDE NAMES, ADDRESSES, AND TELEPHONE NUMBERS.
4. SOLD MATERIALS: INDICATE RECEIPT AND ACCEPTANCE OF SALVAGEABLE WASTE SOLD TO INDIVIDUALS AND ORGANIZATIONS. INDICATE WHETHER ORGANIZATION IS TAX EXEMPT. INCLUDE NAMES, ADDRESSES, AND TELEPHONE NUMBERS.

D. HANDLING AND TRANSPORTATION PROCEDURES: INCLUDE METHODS THAT WILL BE USED FOR SEPARATING RECYCLABLE WASTE INCLUDING SIZES OF CONTAINERS, CONTAINER LABELING, AND DESIGNATED LOCATION(S) ON PROJECT SITE WHERE SEPARATED MATERIALS WILL BE STOCKPILED.

E. WASTE MANAGEMENT COORDINATOR: IDENTIFY GENERAL CONTRACTOR EMPLOYEE WHO WILL BE THE WASTE MANAGEMENT COORDINATOR FOR THE PROJECT. THE WASTE MANAGEMENT COORDINATOR WILL BE RESPONSIBLE FOR IMPLEMENTING, MONITORING, AND REPORTING STATUS OF WASTE MANAGEMENT ACTIVITIES.

PART 2 - PRODUCTS (NOT USED)

PART 3 - EXECUTION

3.1 PLAN IMPLEMENTATION

A. GENERAL: IMPLEMENT WASTE MANAGEMENT PLAN AS APPROVED BY THE DESIGNER. PROVIDE CONTAINERS, STORAGE, SIGNAGE, TRANSPORTATION, AND OTHER ITEMS AS REQUIRED TO IMPLEMENT WMP FOR THE ENTIRE DURATION OF THE CONTRACT.

B. THE GENERAL CONTRACTOR SHALL CONDUCT A WASTE MANAGEMENT MEETING AT THE SITE. THE GENERAL CONTRACTOR SHALL REVIEW METHODS AND PROCEDURES RELATED TO WASTE MANAGEMENT INCLUDING, BUT NOT LIMITED TO, THE FOLLOWING:

1. DISTRIBUTE APPROVED WMP TO EVERYONE CONCERNED WITHIN THREE DAYS OF APPROVED SUBMITTAL RETURN.
2. CLEARLY IDENTIFY THE WASTE MANAGEMENT COORDINATOR AND EXPLAIN THE COORDINATOR'S RESPONSIBILITIES.
3. REVIEW WMP WITH EACH SUBCONTRACTOR WHEN THEY FIRST BEGIN WORK ON-SITE. REVIEW PLAN PROCEDURES AND LOCATIONS ESTABLISHED FOR RECYCLING AND DISPOSAL.
4. REVIEW AND FINALIZE PROCEDURES FOR MATERIAL SEPARATION AND VERIFY AVAILABILITY OF CONTAINERS AND BINS NEEDED TO MAINTAIN PRODUCTION.
5. REVIEW PROCEDURES FOR PERIODIC WASTE COLLECTION AND TRANSPORTATION TO RECYCLING AND DISPOSAL FACILITIES.
6. PROVIDE RECYCLING EDUCATIONAL LITERATURE FOR ALL WORKERS, SUBCONTRACTORS AND SUPPLIERS ENGAGED IN ON-SITE ACTIVITIES.
7. PROVIDE APPROPRIATE RECYCLING SIGNAGE FOR CONTAINERS AND WORKSPACES.

C. SITE ACCESS AND TEMPORARY CONTROLS: CONDUCT WASTE MANAGEMENT OPERATIONS TO ENSURE MINIMUM INTERFERENCE WITH ROADS, STREETS, WALKWAYS, AND OTHER ADJACENT OCCUPIED FACILITIES.

1. DESIGNATE AND LABEL SPECIFIC AREAS ON PROJECT SITE NECESSARY FOR SEPARATING MATERIALS THAT ARE TO BE RECYCLED, REUSED, DONATED, SOLD, AND DISPOSED.

2. COMPLY WITH PROJECT REQUIREMENTS FOR CONTROLLING DUST AND DIRT, ENVIRONMENTAL PROTECTION, AND NOISE CONTROL.

3.2 RECYCLING CONSTRUCTION WASTE, GENERAL

A. PROCEDURES: SEPARATE RECYCLABLE WASTE FROM OTHER WASTE MATERIALS, TRASH, AND DEBRIS. SEPARATE RECYCLABLE WASTE BY TYPE AT PROJECT SITE TO THE MAXIMUM EXTENT PRACTICAL. FOR WASTE, WHICH CANNOT BE SEPARATED AT PROJECT SITE, CO-MINGLE ONLY WITH WASTE, WHICH IS TO BE SEPARATED LATER AT A RECYCLING FACILITY. THE GENERAL CONTRACTOR WILL ADDRESS CONTAMINATION OF RECYCLING CONTAINERS WITH TRASH OR OTHER CONTAMINANTS AND WHO WILL BE SOLELY RESPONSIBLE FOR PAYMENT OF ALL FINES AND PENALTIES.

1. PROVIDE APPROPRIATELY MARKED CONTAINERS OR BINS FOR CONTROLLING RECYCLABLE WASTE UNTIL THEY ARE REMOVED FROM PROJECT SITE. INCLUDE LIST OF ACCEPTABLE AND UNACCEPTABLE MATERIALS AT EACH CONTAINER AND BIN. INSPECT CONTAINERS AND BINS FOR CONTAMINATION AND REMOVE CONTAMINATED MATERIALS IF FOUND.
2. STOCKPILE PROCESSED MATERIALS ON-SITE WITHOUT INTERMIXING WITH OTHER MATERIALS. PLACE, GRADE, AND SHAPE STOCKPILES TO DRAIN SURFACE WATER. COVER TO PREVENT WINDBLOWN DUST.
3. STOCKPILE MATERIALS AWAY FROM CONSTRUCTION AREA. DO NOT STORE WITHIN DRIP LINE OF REMAINING TREES.
4. STORE COMPONENTS OFF THE GROUND AND PROTECT FROM THE WEATHER.
5. REMOVE RECYCLABLE WASTE OFF USER AGENCY'S PROPERTY AND TRANSPORT TO RECYCLING RECEIVER OR PROCESSOR.

B. ON-SITE CRUSHING OF ASPHALT PAVEMENT, BRICK, AND CONCRETE (ABC) RUBBLE AS DESCRIBED IN 310 CMR 16.05, IS NOT ALLOWED. ALL ABC WASTE MUST BE TRANSPORTED OFF-SITE TO AN ASPHALT BATCHING PLANT OR TO AN ABC CRUSHING OR RECYCLING OPERATION FACILITY THAT IS EITHER CONDITIONALLY EXEMPT FROM 310 CMR 16.00 OR HAS BEEN SITED AND PERMITTED IN ACCORDANCE WITH 310 CMR 16.00 AND 310 CMR 19.000, RESPECTIVELY.

3.3 RECYCLING CONSTRUCTION WASTE

A. PACKAGING:

1. CARDBOARD AND BOXES: BREAK DOWN PACKAGING INTO FLAT SHEETS. BUNDLE AND STORE IN A DRY LOCATION.
2. POLYSTYRENE PACKAGING: SEPARATE AND BAG MATERIALS.
3. PALLETS: TO THE EXTENT FEASIBLE, REQUIRE SHIPPERS USING PALLETS TO REMOVE PALLETS FROM PROJECT SITE. FOR PALLETS THAT REMAIN ON-SITE, BREAK DOWN PALLETS INTO COMPONENT WOOD PIECES AND COMPLY WITH REQUIREMENTS FOR RECYCLING WOOD.
4. CRATES: BREAK DOWN CRATES INTO COMPONENT WOOD PIECES AND COMPLY WITH REQUIREMENTS FOR RECYCLING WOOD.

B. SITE-CLEARING WASTES: CHIP BRUSH, BRANCHES, AND TREES ON-SITE.

C. CONCRETE: DEPOSIT ALL DEBRIS IN DESIGNATED CONTAINERS TO BE TRANSPORTED TO APPROVED AGGREGATE RECYCLING FACILITY TO BE CRUSHED AND SCREENED FOR USE AS SATISFACTORY SOIL FOR FILL OR SUB-BASE.

D. MASONRY: DEPOSIT ALL MASONRY DEBRIS IN DESIGNATED CONTAINERS TO BE TRANSPORTED TO APPROVED AGGREGATE RECYCLING FACILITY TO BE CRUSHED AND SCREENED FOR USE AS SATISFACTORY SOIL FOR GENERAL FILL OR SATISFACTORY SOIL FOR FILL OR SUB-BASE. CLEAN AND STACK UNDAMAGED WHOLE MASONRY UNITS ON WOOD PALLETS.

E. WOOD MATERIALS:

1. CLEAN CUT-OFFS OF LUMBER: DEPOSIT INTO DESIGNATED CLEAN WOOD CONTAINER TO BE TRANSPORTED TO DESIGNATED RECYCLING FACILITY FOR USE AS MULCH OR BIO-FUEL.
2. CLEAN SAWDUST: BAG SAWDUST THAT DOES NOT CONTAIN PAINTED OR TREATED WOOD.

F. METALS: SEPARATE METALS BY MATERIAL TYPE IF PRACTICAL. STACK SALVAGEABLE STRUCTURAL STEEL MEMBERS ACCORDING TO SIZE, TYPE OF MEMBER, AND LENGTH.

G. ASPHALT SHINGLE ROOFING: DEPOSIT ASPHALT SHINGLES IN DESIGNATED CONTAINERS FOR OFF-SITE REUSE. NAILS, STAPLES ACCEPTABLE, FLASHING TRIM AND ACCESSORIES SHALL BE RECYCLED AS METALS.

H. GLASS: DEPOSIT GLASS DEBRIS INTO DESIGNATED CONTAINERS TO BE TRANSPORTED TO APPROVED GLASS-RECYCLING FACILITY.

I. PLASTICS: DEPOSIT PLASTIC CONTAINERS AND DEBRIS INTO DESIGNATED CONTAINERS TO BE TRANSPORTED TO APPROVED PLASTIC RECYCLING FACILITY.

J. CLEAN GYPSUM BOARD: DEPOSIT SCRAPS OF CLEAN GYPSUM BOARD INTO DESIGNATED CONTAINER PROTECTED FROM WEATHER AND TRANSPORT TO AN APPROPRIATE GYPSUM BOARD RECYCLING OUTLET OR PERMITTED CONSTRUCTION AND DEMOLITION DEBRIS PROCESSING FACILITY THAT WILL DIVERT CLEAN GYPSUM BOARD TO AN APPROPRIATE GYPSUM BOARD RECYCLING OUTLET.

K. ACOUSTIC CEILING PANELS: DEPOSIT PULP ABLE MINERAL FIBER PANELS INTO DESIGNATED CONTAINER PROTECTED FROM WEATHER AND PREPARE FOR TRANSPORT, AS DIRECTED BY MANUFACTURER, TO APPROPRIATE RECYCLING FACILITY TO BE PROCESSED INTO NEW ACOUSTIC CEILING PANELS. SEPARATE SUSPENSION SYSTEM, TRIM, AND OTHER METALS FROM PANELS AND SORT WITH OTHER METALS.

L. CARPET: DEPOSIT CARPET INTO DESIGNATED CONTAINER PROTECTED FROM WEATHER AND PREPARE FOR TRANSPORT, AS DIRECTED BY MANUFACTURER, TO APPROPRIATE RECYCLING FACILITY TO BE PROCESSED INTO NEW PRODUCTS.

M. GENERAL: RECYCLE PAPER AND BEVERAGE CONTAINERS USED BY ON-SITE WORKERS.

3.4 DISPOSAL OF WASTE

A. EXCEPT FOR ITEMS OR MATERIALS TO BE RECYCLED, OR OTHERWISE REUSED, REMOVE WASTE MATERIALS FROM PROJECT SITE AND LEGALLY DISPOSE OF THEM IN A LANDFILL OR INCINERATOR ACCEPTABLE TO AUTHORITIES HAVING JURISDICTION.

1. EXCEPT AS OTHERWISE SPECIFIED, DO NOT ALLOW WASTE MATERIALS THAT ARE TO BE DISPOSED OF ACCUMULATE ON-SITE.
2. REMOVE AND TRANSPORT DEBRIS IN A MANNER THAT WILL PREVENT SPILLAGE ON ADJACENT SURFACES AND AREAS.
3. FOR SOLID WASTE DISPOSAL FACILITIES LOCATED IN THE COMMONWEALTH OF MASSACHUSETTS, DISPOSE OF MATERIALS ONLY IN FACILITIES WHICH CURRENTLY COMPLY WITH APPLICABLE STATE REGULATIONS, INCLUDING REQUIREMENTS OF 310 CMR 16.00 {SITE ASSIGNMENT FOR SOLID WASTE FACILITIES} AND 310 CMR 19.000 {SOLID WASTE MANAGEMENT}, AND LOCAL BYLAWS.

B. BURNING: DO NOT BURN WASTE MATERIALS.

C. DISPOSAL: TRANSPORT WASTE MATERIALS OFF OWNER'S PROPERTY AND LEGALLY DISPOSE OF THEM.

END OF SECTION

SECTION 017700

CONTRACT CLOSEOUT

1.1 GENERAL PROVISIONS

A. ATTENTION IS DIRECTED TO THE CONTRACT AND GENERAL CONDITIONS AND ALL SECTIONS WITHIN DIVISION 01 - GENERAL REQUIREMENTS WHICH ARE HEREBY MADE A PART OF THIS SECTION OF THE SPECIFICATIONS.

1.2 FINAL CLEANING

A. UNLESS OTHERWISE SPECIFIED UNDER THE VARIOUS SECTIONS OF THE SPECIFICATIONS, THE GENERAL CONTRACTOR SHALL PERFORM FINAL CLEANING OPERATIONS AS HEREIN SPECIFIED PRIOR TO FINAL INSPECTION.

B. MAINTAIN PROJECT SITE FREE FROM ACCUMULATIONS OF WASTE, DEBRIS, AND RUBBISH, CAUSED BY OPERATIONS. AT COMPLETION OF WORK, REMOVE WASTE MATERIALS, RUBBISH, TOOLS, EQUIPMENT, MACHINERY AND SURPLUS MATERIALS, AND CLEAN ALL SIGHT-EXPOSED SURFACES; LEAVE PROJECT CLEAN AND READY FOR OCCUPANCY.

C. CLEANING SHALL INCLUDE ALL SURFACES, INTERIOR AND EXTERIOR IN WHICH THE GENERAL CONTRACTOR HAS HAD ACCESS WHETHER EXISTING OR NEW.

D. REFER TO SECTIONS OF THE SPECIFICATIONS FOR CLEANING OF SPECIFIC PRODUCTS OR WORK.

E. USE ONLY THOSE MATERIALS WHICH WILL NOT CREATE HAZARDS TO HEALTH OR PROPERTY AND WHICH WILL NOT DAMAGE SURFACES.

F. USE ONLY THOSE CLEANING MATERIALS AND METHODS THAT ARE RECOMMENDED BY THE MANUFACTURER OF SURFACE MATERIAL TO BE CLEANED.

G. EMPLOY EXPERIENCED WORKMEN, OR PROFESSIONAL CLEANERS, FOR FINAL CLEANING OPERATIONS.

H. REMOVE GREASE, MASTIC, ADHESIVES, DUST, DIRT, STAINS, FINGERPRINTS, LABELS, AND OTHER FOREIGN MATERIALS FROM SIGHT-EXPOSED INTERIOR AND EXTERIOR SURFACES.

I. WASH AND POLISH MIRRORS.

J. ALL NEW AND EXISTING GLASS AND PLASTIC SURFACES THROUGHOUT THE BUILDING SHALL BE THOROUGHLY CLEANED AND WASHED BY QUALIFIED WINDOW CLEANERS AT THE EXPENSE OF THE GENERAL CONTRACTOR JUST PRIOR TO ACCEPTANCE OF THE WORK.

K. REPAIR, PATCH AND TOUCH UP MARRED SURFACES TO SPECIFIED FINISH, TO MATCH ADJACENT SURFACES AS ACCEPTABLE TO THE DCAM PROJECT MANAGER.

L. POLISH GLOSSY SURFACES TO A CLEAR SHINE AND PROVIDE WAX WHERE NECESSARY.

M. VENTILATING SYSTEMS: CLEAN PERMANENT FILTERS AND REPLACE DISPOSABLE FILTERS IF UNITS WERE OPERATED DURING CONSTRUCTION. UNITS SHOULD NOT BE OPERATED WITHOUT FILTERS AT ALL. THROW AWAY FILTERS SHOULD BE USED WHEN OPERATING UNITS PRIOR TO SUBSTANTIAL COMPLETION. SUBMIT REPORT OF VENTILATION SYSTEM CLEANLINESS INCLUDING DUCTWORK TO THE DCAM PROJECT MANAGER.

N. BROOM CLEAN EXTERIOR PAVED SURFACES AND RAKE CLEAN OTHER SURFACES OF THE GROUNDS.

O. LEAVE ALL ARCHITECTURAL METALS, HARDWARE, AND FIXTURES IN UNDAMAGED POLISHED CONDITIONS.

P. LEAVE PIPE AND DUCT SPACES, PLENUMS, FURRED SPACES AND THE LIKE CLEAN OF DEBRIS AND DECAYABLE MATERIALS.

Q. AT THE END OF THE PROJECT, GENERAL CONTRACTOR AND EACH SUBCONTRACTOR SHALL REMOVE ALL HIS TOOLS, EQUIPMENT, MACHINERY, AND SURPLUS MATERIALS FROM THE JOB SITE. THE GENERAL CONTRACTOR SHALL REMOVE ALL WASTE MATERIALS AND RUBBISH FROM THE PROJECT AT THIS TIME. ALL TEMPORARY STRUCTURES SHALL BE REMOVED AND THE PROJECT SHALL BE LEFT CLEAN.

R. SUBSEQUENT TO INSTALLATION OF USER AGENCY FURNITURE, TELEPHONES, AND EQUIPMENT, AND PRIOR TO ISSUE OF CERTIFICATE OF USE AND OCCUPANCY, PROVIDE ADDITIONAL CLEANING TO REMOVE ANY SOIL RESULTING FROM INSTALLATIONS OF SUCH FURNITURE AND EQUIPMENT. SUCH ADDITIONAL CLEANING MAY INCLUDE, BUT NOT BE LIMITED TO DUSTING OF HORIZONTAL SURFACES, VACUUMING, AND WASHING OF HARD OR RESILIENT FLOOR SURFACES AND RE-WAXING WHERE REQUIRED.

1.3 GLASS

A. ALL BROKEN OR DEFECTIVE GLASS NOT REQUIRED TO BE REPLACED UNDER THE PROVISIONS OF SECTION 088000 - GLAZING, SHALL BE REPLACED AT THE EXPENSE OF THE GENERAL CONTRACTOR.

1.4 AS-BUILT DRAWINGS

A. AS-BUILT DRAWINGS SHALL CONSIST OF ALL THE CONTRACT DRAWINGS. AS-BUILT DRAWINGS SHALL BE KEPT UP-TO-DATE. INFORMATION FROM ON-GOING WORK SHALL BE RECORDED ON AS-BUILT DRAWINGS WITHIN 48 HOURS OF WORK BEING PERFORMED.

B. THE GENERAL CONTRACTOR AND EACH SUBCONTRACTOR SHALL BE REQUIRED TO MAINTAIN ONE SET OF AS-BUILT DRAWINGS, AS THE WORK RELATES TO THEIR SECTIONS OF THE SPECIFICATIONS, AT THE SITE.

C. THE AS-BUILT DRAWINGS SHALL BE STORED AND MAINTAINED IN THE GENERAL CONTRACTOR'S FIELD OFFICE APART FROM OTHER DOCUMENTS USED FOR CONSTRUCTION. THE AS-BUILT DRAWINGS SHALL BE MAINTAINED IN A CLEAN, DRY, AND LEGIBLE CONDITION AND SHALL NOT BE USED FOR CONSTRUCTION PURPOSES.

D. AS-BUILT DRAWINGS, AS SUBMITTED BY THE GENERAL CONTRACTOR SHALL BE VERIFIED IN THE FIELD BY THE DESIGNER OR HIS CONSULTANTS. VERIFICATION BY THE DESIGNER SHALL OCCUR DURING THE CONSTRUCTION PROCESS AND PRIOR TO THE RELATED WORK BEING COMPLETED AND COVERED UP.

E. THE AS-BUILT DRAWINGS SHALL BE AVAILABLE AT ALL TIME FOR INSPECTION BY THE DCAM PROJECT MANAGER OR DESIGNER. ALL DEFICIENCIES NOTED SHALL BE PROMPTLY CORRECTED.

F. THE FOLLOWING INFORMATION SHALL BE INDICATED ON THE AS-BUILT DRAWINGS:

1. RECORD ALL CHANGES, INCLUDING CHANGE ORDERS, IN THE LOCATION, SIZE, NUMBER AND TYPE BOTH HORIZONTALLY AND VERTICALLY OF ALL ELEMENTS OF THE PROJECT WHICH DEVIATE FROM THOSE INDICATED ON ALL THE CONTRACT DRAWINGS.

2. THE TOLERANCE FOR THE ACTUAL LOCATION OF UTILITIES AND APPURTENANCES WITHIN THE BUILDING TO BE MARKED ON THE AS-BUILT DRAWINGS SHALL BE PLUS OR MINUS TWO (2) INCHES.
3. THE LOCATION OF ALL UNDERGROUND UTILITIES AND APPURTENANCES REFERENCED TO PERMANENT SURFACE IMPROVEMENTS, BOTH HORIZONTALLY AND VERTICALLY AT TEN (10) FT. INTERVALS AND AT ALL CHANGES OF DIRECTION.
4. THE LOCATION OF ALL INTERNAL UTILITIES AND APPURTENANCES, CONCEALED BY FINISH MATERIALS, INCLUDING BUT NOT LIMITED TO VALVES, COILS, DAMPERS, VENTS, CLEANOUTS, STRAINERS, PIPES, JUNCTION BOXES, TURNING VANES, VARIABLE AND CONSTANT VOLUME BOXES, DUCTS, TRAPS AND MAINTENANCE DEVICES. THE LOCATION OF THESE INTERNAL UTILITIES, APPURTENANCES, AND DEVICES SHALL BE SHOWN BY OFFSETS TO THE COLUMN GRID LINES ON THE DRAWINGS.
5. EACH OF THE UTILITIES AND APPURTENANCES SHALL BE REFERENCED BY SHOWING A TAG NUMBER, AREA SERVED AND FUNCTION ON THE AS-BUILT DRAWINGS.

G. AT THE END OF EACH MONTH AND BEFORE PAYMENT FOR MATERIALS INSTALLED, THE GENERAL CONTRACTOR, EACH SUBCONTRACTOR, AND AGENTS OF THE COMMONWEALTH SHALL REVIEW AS-BUILT DRAWINGS FOR PURPOSE OF PAYMENT.

1. IF THE CHANGES IN LOCATION OF ALL INSTALLED ELEMENTS ARE NOT SHOWN ON THE AS-BUILT DRAWINGS AND VERIFIED IN THE FIELD, THEN THE MATERIAL SHALL NOT BE CONSIDERED AS INSTALLED AND PAYMENT WILL BE WITHHELD.

H. PRIOR TO THE INSTALLATION OF ALL FINISH MATERIALS, A REVIEW OF THE AS-BUILT DRAWINGS SHALL BE MADE TO CONFIRM THAT ALL CHANGES HAVE BEEN RECORDED. ALL COSTS TO INVESTIGATE SUCH CONDITIONS SHALL BE BORNE BY THE APPLICABLE PARTY AS DETERMINED BY THE DESIGNER.

I. AT THE COMPLETION OF THE CONTRACT, EACH SUBCONTRACTOR SHALL SUBMIT TO THE GENERAL CONTRACTOR A COMPLETE SET OF HIS RESPECTIVE AS-BUILT DRAWINGS INDICATING ALL CHANGES. AFTER CHECKING THE ABOVE DRAWINGS, THE GENERAL CONTRACTOR SHALL CERTIFY IN WRITING ON THE TITLE SHEET OF THE DRAWINGS THAT THEY ARE COMPLETE AND CORRECT AND SHALL SUBMIT THE AS-BUILT DRAWINGS TO THE DESIGNER.

1. AS-BUILT DRAWINGS SHALL BE SUBMITTED ELECTRONICALLY TO THE DESIGNER, IN A FORMAT WHICH CAN BE ADDED TO THE COMPLETE PLANS AS CONSTRUCTED.

J. THE DESIGNER SHALL REVIEW THE DRAWINGS AND SHALL VERIFY BY LETTER TO THE DCAM PROJECT MANAGER THAT THE WORK IS ACCURATE. THE DESIGNER SHALL INCORPORATE ALL CHANGES ON THE ORIGINAL DRAWINGS; THUS CREATING RECORD DRAWINGS. THE DESIGNER SHALL SUBMIT TO THE DCAM PROJECT MANAGER, ELECTRONIC FILES IN AUTOCAD 2000 (OR LATER VERSION) FORMAT WITH TWO (2) SETS OF PRINTS TO BE USED FOR THE FINAL INSPECTION OF THE PROJECT. INACCURACIES IN AS-BUILT DRAWINGS, AS DETERMINED BY THE DESIGNER AND THE DCAM PROJECT MANAGER, MAY BE GROUNDS FOR POSTPONEMENT OF THE FINAL INSPECTION OR DELAY THE PROCESSING OF FINAL PAYMENT UNTIL SUCH INACCURACIES ARE CORRECTED BY THE GENERAL CONTRACTOR.

1.5 OPERATING AND MAINTENANCE REQUIREMENTS

A. AT LEAST TWO WEEKS PRIOR TO THE TIME OF TURNING OVER THIS CONTRACT TO THE OPERATING AGENCY FOR USE AND OCCUPANCY, OR FINAL ACCEPTANCE, THE GENERAL CONTRACTOR SHALL SECURE AND DELIVER TO THE OPERATING AGENCY VIA THE DESIGNER, THREE (3) COMPLETE, INDEXED FILES AND THREE (3) CD OR DVD COPIES, CONTAINING APPROVED OPERATING AND MAINTENANCE MANUALS, SHOP DRAWINGS, RECORD OF PAINT COLORS, FLOOR AND CEILING MATERIALS AND OTHER DATA AS FOLLOWS.

1. OPERATING MANUALS AND OPERATING INSTRUCTIONS FOR EACH MODEL AND TYPE OF EQUIPMENT IN EACH OF THE VARIOUS SYSTEMS. INCLUDE OPERATING INSTRUCTIONS FOR SYSTEMS INTEGRATING SEVERAL PIECES OF EQUIPMENT.

2. CATALOG DATA SHEETS FOR EACH ITEM OF MECHANICAL OR ELECTRICAL OR EQUIPMENT ACTUALLY INSTALLED INCLUDING PERFORMANCE CURVES, RATING DATA AND PARTS LISTS.
3. CATALOG SHEETS, MAINTENANCE MANUALS, AND APPROVED SHOP DRAWINGS OF ALL MECHANICAL OR ELECTRICAL EQUIPMENT CONTROLS AND FIXTURES WITH ALL DETAILS CLEARLY INDICATED, INCLUDING SIZE OF LAMPS AND OTHER MAINTENANCE SUPPLIES.
4. NAMES, ADDRESSES AND TELEPHONE NUMBERS OF ALL SUBCONTRACTORS AND SUPPLIERS, TOGETHER WITH REPAIR AND SERVICE COMPANIES FOR EACH OF THE MAJOR SYSTEMS INSTALLED UNDER THIS CONTRACT.
5. PROVIDE A STEEL CABINET FOR STORAGE OF MANUALS AND OPERATING INSTRUCTIONS.

B. NON-AVAILABILITY OF OPERATING AND MAINTENANCE MANUALS OR INACCURACIES THEREIN MAY BE GROUNDS FOR CANCELLATION AND POSTPONEMENT OF ANY SCHEDULED FINAL INSPECTION BY THE DCAM PROJECT MANAGER UNTIL SUCH TIME AS THE DISCREPANCY HAS BEEN CORRECTED.

1.6 CLOSEOUT REQUIREMENTS AND SUBMITTALS

A. PROCEDURAL REQUIREMENTS PRIOR TO USE AND OCCUPANCY: PUNCH LIST:

1. DURING THE FINISHING STAGES OF THE PROJECT, THE GENERAL CONTRACTOR SHALL MAKE FREQUENT INSPECTIONS WITH SUBCONTRACTORS, THE DESIGNER, AND THE DCAM RESIDENT ENGINEER, SO AS TO PROGRESSIVELY CHECK FOR AND CORRECT FAULTY WORK.
2. DURING THE COURSE OF CONSTRUCTION OF THE PROJECT, THE GENERAL CONTRACTOR SHALL PROCURE AND MAINTAIN TEST RECORDS AND CERTIFICATES THAT WILL BE REQUIRED PRIOR TO ISSUANCE OF THE DEPARTMENT OF PUBLIC SAFETY (DPS) CERTIFICATE OF OCCUPANCY AND THE DIVISION OF CAPITAL ASSET MANAGEMENT (DCAM) CERTIFICATE OF AGENCY USE AND OCCUPANCY.
3. WHEN THE GENERAL CONTRACTOR DETERMINES THAT HE/SHE IS SUBSTANTIALLY COMPLETE*, HE/SHE SHALL PREPARE FOR SUBMISSION TO THE DESIGNER A LIST OF ITEMS TO BE COMPLETED OR CORRECTED. THE FAILURE TO INCLUDE ANY ITEMS ON SUCH LIST DOES NOT ALTER THE RESPONSIBILITY OF THE GENERAL CONTRACTOR TO COMPLETE ALL WORK IN ACCORDANCE WITH CONTRACT DOCUMENTS. THE GENERAL CONTRACTOR'S LIST SHALL BE ACCOMPANIED WITH CERTIFICATES THAT WILL BE REQUIRED AS PREREQUISITES FOR APPLYING FOR A DPS INSPECTION
   a. *NOTE: SUBSTANTIALLY COMPLETE MEANS THAT LESS THAN ONE PERCENT (1%) OF ALL CONTRACT WORK, INCLUDING CHANGE ORDERS, REMAINS TO BE DONE, AND THAT NONE OF THE REMAINING WORK WILL AFFECT HEALTH, SAFETY, OR FUNCTION.
4. UPON RECEIPT OF THE GENERAL CONTRACTOR'S LIST OF ITEMS TO BE COMPLETED OR CORRECTED, THE DESIGNER WILL PROMPTLY MAKE A THOROUGH INSPECTION, TOGETHER WITH REPRESENTATIVES OF DCAM AND THE OPERATING AGENCY, AND PREPARE A "PUNCH LIST", SETTING FORTH IN ACCURATE DETAIL ANY ITEMS ON THE GENERAL CONTRACTOR'S LIST AND ADDITIONAL ITEMS THAT ARE NOT ACCEPTABLE. CONCURRENTLY, THE GENERAL CONTRACTOR WILL ARRANGE FOR A DPS INSPECTION.
5. WHEN THE PUNCH LIST HAS BEEN PREPARED, AND ANY DPS INSPECTOR COMMENTS* HAVE BEEN INCLUDED, THE DESIGNER WILL ARRANGE A MEETING WITH THE GENERAL CONTRACTOR AND SUBCONTRACTORS, AND THE DCAM PROJECT MANAGER, TO IDENTIFY AND EXPLAIN ALL PUNCH LIST ITEMS AND ANSWER QUESTIONS ON THE WORK THAT MUST BE DONE BEFORE FINAL ACCEPTANCE.
   a. IF A DPS INSPECTOR (INCLUDING, BUT NOT LIMITED TO AABA, BOILER, ELEVATOR OR ANY OTHER AUTHORIZED INSPECTOR) REQUIRES MODIFICATIONS AND/OR ADDITIONS THAT WERE NOT INCLUDED IN THE CONSTRUCTION DOCUMENTS, THE DESIGNER SHOULD REVIEW THE APPLICABLE CODE(S) AND PROVIDE WRITTEN INTERPRETATION TO THE DCAM PROJECT MANAGER TOGETHER WITH HIS/HER RECOMMENDATIONS.
6. THE GENERAL CONTRACTOR SHALL IMMEDIATELY CORRECT ALL PUNCH LIST ITEMS THAT AFFECT HEALTH, SAFETY OR FUNCTION (AS DETERMINED BY THE DESIGNER, COMPLETION OF WHICH IS REQUIRED BEFORE ISSUANCE OF A DCAM CERTIFICATE OF AGENCY USE AND OCCUPANCY).

7. UPON RECEIPT OF THE DCAM CERTIFICATE OF AGENCY USE AND OCCUPANCY, AND ITS ADJUNCT MONETIZED PUNCH LIST, THE GENERAL CONTRACTOR SHALL CAUSE THE COMPLETION OF ALL OF THE OTHER PUNCH LIST ITEMS WITHIN THE TIMEFRAME REQUIRED BY SAID CERTIFICATE, BUT NOT MORE THAN 45 CALENDAR DAYS IF THE TIMEFRAME IS NOT INDICATED ON THE SAID CERTIFICATE.
8. THERE IS A HISTORY OF SPECIFIC ITEMS THAT ARE ESSENTIAL TO THE USE AND OCCUPANCY, BUT ARE FREQUENTLY OVERLOOKED. SOME THINGS TO WATCH FOR ARE:
   a. PROVIDE PROPERLY COLORED AND POSITIONED EXIT SIGNS.
   b. PROPERLY LOCATED EMERGENCY LIGHTING FIXTURES.
   c. COMPLETE OR, BY AGREEMENT, SCHEDULE PERSONNEL TRAINING.
   d. FINAL CLEANING.
   e. VENTILATING SYSTEMS:
      1) CLEAN PERMANENT FILTERS AND REPLACE DISPOSABLE FILTERS IF UNITS WERE OPERATED DURING CONSTRUCTION.
      2) CLEAN DUCTS, BLOWERS, AND COILS IF UNITS WERE OPERATED WITHOUT FILTERS DURING CONSTRUCTION.
      3) LEAVE PIPE AND DUCT SPACES, PLENUMS, FURRED SPACES AND THE LIKE CLEAN OF DEBRIS AND MATERIALS SUBJECT TO DECAY.
   f. PROVIDE A PROPERLY WORKING LOCK FOR THE MEDICAL ENVIRONMENTAL CLOSETS (IF APPLICABLE).
   g. ASSURE THAT EXTERIOR AND INTERIOR FIRE RATED AND EGRESS DOORS ARE OPERATING PROPERLY AND HAVE THE PROPER HARDWARE.
   h. ASSURE THAT FIRE-RATING LABELS ARE ON DOORS AND FRAMES THAT ARE SUPPOSED TO HAVE THEM.
   i. ASSURE THAT SMOKE BARRIERS ARE PROPERLY INSTALLED AND LOCATED.
   j. ASSURE THAT THE SPARE SET OF EACH TYPE OF SPRINKLER HEAD AND A HEAD REMOVAL TOOL HAVE BEEN PROVIDED.
   k. ASSURE THAT FLOORS DRAIN PROPERLY.
   l. ASSURE THAT PROPER HOT WATER TEMPERATURES ARE PROVIDED. UNLESS OTHERWISE SPECIFIED OR REQUIRED BY A USER AGENCY, THE TEMPERATURE SET ON BUILDING MASTER CONTROLLERS OF HOT WATER SHALL APPLY:
      1) HW TO TOILET ROOMS AND JANITORS CLOSETS SHALL BE 140°F.
      2) HW TO INDIVIDUAL TUBS OR SHOWERS SHALL BE CONTROLLED, IN ADDITION TO THE MASTER CONTROLLER ABOVE, WITH THERMOSTATIC VALVES SET TO FURNISH HW AT A TEMPERATURE NOT EXCEEDING 110°F AND EQUIPPED WITH ANTI-SCALD FEATURE.
      3) HW RINSE WATER TO DISHWASHERS SHALL BE CONTROLLED AT 180°F.
   m. ASSURE THAT PROPER WATER PRESSURE IS PROVIDED FOR THE SPRINKLER SYSTEM.
   n. ASSURE THAT LOW-CONSUMPTION (LC) TOILETS HAVE BEEN INSTALLED (1.6 GPF OR LESS).
   o. RE-LAMP IF PERMANENT LIGHTING SYSTEM WAS USED DURING CONSTRUCTION.
   p. AS-BUILT MARKED-UP DRAWINGS SHOULD BE COMPLETED AND TRANSFERRED OVER TO THE DESIGNER.

B. PREREQUISITES FOR DEPARTMENT OF PUBLIC SAFETY (DPS) CERTIFICATE OF INSPECTION AND/OR CERTIFICATE OF OCCUPANCY: PRIOR TO REQUESTING A DEPARTMENT OF PUBLIC SAFETY (DPS) INSPECTION, THE GENERAL CONTRACTOR SHALL PROVIDE (VIA TRANSMITTAL TO THE DCAM RESIDENT ENGINEER) THE FOLLOWING “CLOSEOUT SUBMITTALS:”

1. PROJECT RECORD DOCUMENTS AND AS-BUILT MARKED-UP DRAWINGS.
2. APPROVED OPERATING AND MAINTENANCE (O & M) DATA.
3. EXTENDED GUARANTEES AND WARRANTIES.
   a. GENERAL CONTRACTOR’S GENERAL GUARANTEE SHALL EFFECTIVELY INCLUDE:
      1) A WRITTEN GUARANTEE, FOR ONE (1) YEAR FROM DATE OF SUBSTANTIAL COMPLETION OF THE PROJECT, AGAINST DEFECTIVE WORKMANSHIP, MATERIAL, INSTALLATION AND EQUIPMENT FOR ALL WORK OF THE PROJECT. REPAIR OR REPLACEMENT OF DEFECTIVE WORKMANSHIP, MATERIAL, INSTALLATION OR EQUIPMENT THAT DEVELOP WITHIN THIS PERIOD SHALL BE ACCOMPLISHED PROMPTLY UPON NOTIFICATION TO THE GENERAL CONTRACTOR, TO THE SATISFACTION OF THE OPERATING AGENCY, AT NO COST.
      2) REPLACE OR REPAIR MATERIAL OR EQUIPMENT THAT REQUIRES EXCESSIVE SERVICE DURING THE GUARANTEE PERIOD.

3) GUARANTEE SHALL INCLUDE 24-HOUR SERVICE OF COMPLETE SYSTEM(S) DURING GUARANTEE PERIOD AT NO ADDITIONAL COST.
4) PROVIDE MANUFACTURER'S ENGINEERING AND TECHNICAL STAFF AT SITE PROMPTLY TO ANALYZE AND RECTIFY PROBLEMS THAT DEVELOP DURING GUARANTEE PERIOD. IF PROBLEMS CANNOT BE RECTIFIED PROMPTLY, TO THE SATISFACTION OF THE USER AGENCY, ADVISE THE DESIGNER IN WRITING; DESCRIBE EFFORTS TO RECTIFY SITUATION AND PROVIDE ANALYSIS OF CAUSE OF PROBLEM.

b. MANUFACTURER'S GUARANTEE OR WARRANTY
1) IN ADDITION TO GUARANTEE REQUIREMENTS ABOVE, OBTAIN MANUFACTURERS' WRITTEN INSTALLATION, EQUIPMENT, AND MATERIAL WARRANTIES FOR TIME PERIODS INDICATED IN THE VARIOUS SPECIFICATION SECTIONS OF THE CONTRACT DOCUMENTS. SUCH MANUFACTURERS' WARRANTIES CONTAINED WITHIN THE SPECIFICATION SECTIONS, TOGETHER WITH ANY OTHER WARRANTIES OFFERED IN MANUFACTURERS' PUBLISHED DATA, ARE TO BE TRANSFERRED TO THE USER AGENCY.

c. KEYS AND KEYING SCHEDULE.

(DESIGNER NOTE: PROVIDE IN EACH SECTION OF SURFACE MATERIAL OR SECTION WITH MATERIAL NEEDING REPLACEMENT A REASONABLE PERCENTAGE OF THE TOTAL AS ATTIC STOCK, FOR EXAMPLE, 2% OF THE TOTAL SQUARE FOOTAGE OF CARPET TILES IN EACH COLOR SHOULD BE PROVIDED TO THE OWNER AT THE COMPLETION OF THE PROJECT)

d. SPARE PARTS AND MAINTENANCE MATERIALS ("ATTIC STOCK"),

e. EVIDENCE OF COMPLIANCE WITH REQUIREMENTS OF GOVERNING AUTHORITIES INCLUDING, WITHOUT LIMITATIONS, THE FOLLOWING:
1) CERTIFICATE OF INSPECTION, IN FORM OF SIGNED PERMITS FROM THE ELECTRICAL, PLUMBING, GAS, FIRE DEPARTMENT, BOILER, AND ANY OTHER REQUIRED INSPECTORS.
2) CERTIFICATION FROM THE LOCAL FIRE DEPARTMENT TO THE EFFECT THAT ALL DETECTION, ALARM AND SUPPRESSION SYSTEMS, AND OTHER EQUIPMENT OR SYSTEMS UNDER FIRE DEPARTMENT JURISDICTION ARE APPROVED.
3) WHEN CARPETING AND/OR DRAPERIES ARE PROVIDED, A FLAME, SMOKE AND FUEL-RATING CERTIFICATE PROVIDED BY THE SUPPLYING GENERAL CONTRACTORS.
4) ELEVATOR CERTIFICATION(S) FROM THE ELEVATOR INSPECTOR OBTAINED THROUGH THE GENERAL CONTRACTOR'S ELEVATOR SUBCONTRACTOR.
5) A LETTER FROM THE PLUMBING SUBCONTRACTOR. THAT THE POTABLE WATER SUPPLY HAS BEEN SANITIZED.
6) SEPTIC SYSTEM CERTIFICATION OBTAINED FROM THE TOWN BY THE GENERAL CONTRACTOR (WHEN APPLICABLE).
7) PRESSURIZED VESSEL CERTIFICATIONS FROM THE BOILER INSPECTOR OBTAINED THROUGH THE MECHANICAL SUBCONTRACTOR.
8) WHEN AIR BALANCING IS REQUIRED, THE AIR BALANCING REPORT PREPARED BY THE MECHANICAL SUBCONTRACTOR (OR COMMISSIONING AGENT, WHEN APPLICABLE), AND ACCEPTED BY THE DESIGN REGISTERED PROFESSIONAL ENGINEER.
9) WHEN SMOKE CONTROL/FIRE EMERGENCY VENTILATION SYSTEM IS REQUIRED, THE TEST REPORT PREPARED BY THE MECHANICAL SUBCONTRACTOR (OR COMMISSIONING AGENT, WHEN APPLICABLE), AND ACCEPTED BY THE DESIGN REGISTERED PROFESSIONAL ENGINEER.
10) EVIDENCE OF TEST AND APPROVAL FOR DEPARTMENT OF ENVIRONMENTAL PROTECTION (DEP) AND DEPARTMENT OF PUBLIC HEALTH (DPH), WHEN APPLICABLE.

C. PREREQUISITES FOR DEPARTMENT OF PUBLIC SAFETY (DPS) CERTIFICATE OF INSPECTION AND/OR CERTIFICATE OF OCCUPANCY: PRIOR TO REQUESTING A DEPARTMENT OF PUBLIC SAFETY (DPS) INSPECTION, THE DESIGNER SHALL PROVIDE (VIA TRANSMITTAL TO THE DCAM RESIDENT ENGINEER) THE FOLLOWING "CLOSEOUT SUBMITTALS:"

1. CERTIFICATION, FROM THE DESIGN REGISTERED PROFESSIONAL ENGINEER, STATING THAT THE FIRE PROTECTION SYSTEMS HAVE BEEN INSTALLED IN ACCORDANCE WITH THE APPROVED FIRE PROTECTION CONSTRUCTION DOCUMENTS AND MEET THE REQUIREMENTS OF 780 CMR 903.1.

2. STRUCTURAL ENGINEER-OF-RECORD (SER) FINAL REPORT AS REQUIRED BY 780 CMR 1705.3.
3. CERTIFICATION, FROM THE DESIGN REGISTERED PROFESSIONAL ENGINEER, STATING THAT THE EMERGENCY LIGHTING AND POWER SYSTEMS HAVE BEEN INSTALLED IN ACCORDANCE WITH THE APPROVED ELECTRICAL CONSTRUCTION DOCUMENTS.

D. UPON COMPLETION OF THE WORK FOR WHICH A PERMIT HAS BEEN ISSUED, THE DPS BUILDING OFFICIAL SHALL CONDUCT A FINAL INSPECTION PURSUANT TO 780 CMR 115.5.

E. BENEFICIAL AND TEMPORARY OCCUPANCY:

1. BENEFICIAL (PARTIAL) OCCUPANCY:
   a. DCAM MAY ALLOW BENEFICIAL (PARTIAL) OCCUPANCY OF PORTIONS OF A BUILDING IN ORDER TO ALLOW A USER AGENCY TO SET UP AND TEST THEIR OWN OPERATIONAL EQUIPMENT IN SELECT BUILDING AREAS. IT DOES NOT ALLOW FOR USE AND/OR OCCUPANCY OF THE GENERAL PUBLIC WHEN, IN FACT, THE BUILDING CANNOT FUNCTION FOR THE USE(S) IT IS INTENDED TO ACCOMMODATE, NOR WHEN THERE ARE OUTSTANDING ITEMS THAT EFFECT HEALTH, SAFETY AND/OR FUNCTION.
   b. IT IS DCAM POLICY TO DISALLOW BENEFICIAL OCCUPANCY IF THE FIRE ALARM AND SUPPRESSION SYSTEMS ARE INOPERATIVE.
   c. BENEFICIAL OCCUPANCY OF BUILDING AREAS SHALL NOT CONSTITUTE SUBSTANTIAL COMPLETION, OR FINAL ACCEPTANCE OF WORK BY DCAM, AND SHALL NOT INSTITUTE THE GUARANTEE PERIOD FOR ANY WORK.
   d. A PUNCH LIST WILL BE DEVELOPED FOR BUILDING AREAS TO RECEIVE BENEFICIAL OCCUPANCY AND THE BUILDING AREAS WILL BE PHOTOGRAPHED PRIOR TO SUCH OCCUPANCY OF SAID PORTION OR PORTIONS OF THE WORK.

2. TEMPORARY OCCUPANCY:
   a. WHEN, ACCORDING TO 780 CMR 120.3 – TEMPORARY OCCUPANCY UPON THE REQUEST OF THE HOLDER OF A PERMIT, A TEMPORARY CERTIFICATE OF OCCUPANCY (TCO) MAY BE ISSUED BEFORE THE COMPLETION OF THE ENTIRE WORK COVERED BY THE PERMIT, PROVIDED THAT SUCH PORTION OR PORTIONS SHALL BE OCCUPIED SAFELY PRIOR TO FULL COMPLETION OF THE BUILDING OR STRUCTURE WITHOUT ENDANGERING LIFE OR PUBLIC WELFARE. THE BUILDING OFFICIAL MAY CONSULT WITH ALL SUBCONTRACTOR INSPECTORS FOR ISSUES PERTAINING TO LIFE SAFETY AND SHALL CONSULT WITH THE FIRE OFFICIAL PERTAINING TO ISSUES OF ADEQUACY OF FIRE PROTECTION SYSTEMS PRIOR TO THE ISSUANCE OF A TEMPORARY CERTIFICATE.
   b. THE BUILDING OFFICIAL MAY ISSUE A TEMPORARY CERTIFICATE OF OCCUPANCY (TCO) THAT CAN ALLOW PUBLIC USE AND OCCUPANCY OF SAID PORTION OR PORTIONS OF THE WORK, SUBJECT TO PUNCH LIST(S) BEING ESTABLISHED PRIOR TO SUCH OCCUPANCY.
   c. ISSUANCE OF A DEPARTMENT OF PUBLIC SAFETY (DPS) TEMPORARY CERTIFICATE OF OCCUPANCY (TCO) DOES NOT RELIEVE THE GENERAL CONTRACTOR OF THE DCAM REQUIREMENTS OF THE CONTRACT AND DOES NOT CONSTITUTE SUBSTANTIAL COMPLETION OF THE PROJECT.
   d. TEMPORARY OCCUPANCY OF BUILDING AREAS WILL INSTITUTE THE GUARANTEE PERIOD FOR COMPLETED WORK OF ALL DIVISIONS EXCEPT 21 THROUGH 28 OF THE SPECIFICATIONS FOR THOSE BUILDING AREAS SO USED AND OCCUPIED, EXCLUSIVE OF REMAINING WORK INDICATED ON ASSOCIATED PUNCH LISTS. USE OF SYSTEMS PROVIDED UNDER DIVISIONS 21 THROUGH 28 OF THE CONTRACT DOCUMENTS FOR TEMPORARY SERVICES AND FACILITIES SHALL NOT CONSTITUTE SUBSTANTIAL COMPLETION, OR FINAL ACCEPTANCE OF WORK BY DCAM, AND SHALL NOT INSTITUTE THE GUARANTEE PERIOD.
      (1) IF IT IS DETERMINED THAT THERE ARE NO ITEMS ON THE PUNCH LIST THAT AFFECT HEALTH, SAFETY OR FUNCTION AND IT IS AGREED BY THE BUILDING OFFICIAL, THE DESIGNER AND THE DCAM PROJECT MANAGER THAT THE ENTIRE BUILDING CAN BE GRANTED A TEMPORARY CERTIFICATE OF OCCUPANCY (TCO), THE WORK OF ALL DIVISIONS INCLUDING 21 THROUGH 28 OF THE SPECIFICATIONS FOR THE ENTIRE BUILDING SO USED AND OCCUPIED, EXCLUSIVE OF REMAINING WORK INDICATED ON ASSOCIATED PUNCH LISTS, WILL INSTITUTE THE GUARANTEE PERIOD FOR COMPLETED

WORK OF ALL DIVISIONS INCLUDING THE SYSTEMS PROVIDED UNDER DIVISIONS 21 THROUGH 28.

(2) WHEREAS A USER AGENCY CANNOT PROPERLY MAINTAIN BUILDING SYSTEMS WITHOUT OPERATING AND MAINTENANCE DOCUMENTATION, SUBCONTRACTORS FOR DIVISIONS 21 THROUGH 28 WILL BE RESPONSIBLE FOR MAINTAINING THEIR RESPECTIVE BUILDING SYSTEMS AT NO ADDITIONAL COST TO THE CONTRACT UNTIL THE PROJECT IS SUBSTANTIALLY COMPLETE AND OPERATING AND MAINTENANCE (O & M) MANUALS, REVIEWED AND APPROVED BY THE DESIGNER, ARE PROVIDED TO THE DCAM PROJECT MANAGER.

(3) ISSUANCE OF A TEMPORARY CERTIFICATE OF OCCUPANCY (TCO) MAY REQUIRE REMAINING PUNCH LIST WORK TO BE COMPLETED DURING IRREGULAR WORK HOURS. SUCH WORK WILL BE PERFORMED AT NO ADDITIONAL COST TO THE CONTRACT.

e. THE FOLLOWING DCAM CRITERIA, AND ANY OTHER CRITERIA THAT MAY BE IMPOSED BY THE BUILDING OFFICIAL, ARE REQUIRED FOR A DPS TEMPORARY CERTIFICATE OF OCCUPANCY (TCO):

(1) UPON RECEIPT OF THE GENERAL CONTRACTOR'S LIST OF ITEMS TO BE COMPLETED OR CORRECTED, THE DESIGNER WILL PROMPTLY MAKE A THOROUGH INSPECTION, TOGETHER WITH REPRESENTATIVES OF DCAM AND THE OPERATING AGENCY, AND PREPARE A "PUNCH LIST", SETTING FORTH IN ACCURATE DETAIL ANY ITEMS ON THE GENERAL CONTRACTOR'S LIST AND ADDITIONAL ITEMS THAT ARE NOT ACCEPTABLE. THE DESIGNER AND DCAM PROJECT MANAGER WILL IDENTIFY AND TAG (BY ASTERISK) ALL ITEMS THAT, IN THEIR OPINION, AFFECT HEALTH, SAFETY OR FUNCTION. THE BUILDING OFFICIAL MAY INCLUDE ADDITIONAL ITEMS THAT, IN HER/HIS OPINION, AFFECT ITEMS THAT ENDANGER LIFE OR PUBLIC WELFARE.

(2) WHEN THE PUNCH LIST HAS BEEN PREPARED, AND ALL DPS INSPECTOR COMMENTS* HAVE BEEN INCLUDED, THE GENERAL CONTRACTOR SHALL IMMEDIATELY CORRECT ALL PUNCH LIST ITEMS THAT AFFECT HEALTH, SAFETY OR FUNCTION (ALL ASTERISKED ITEMS). THIS WORK MUST BE COMPLETED BEFORE THE ISSUANCE OF A DPS TEMPORARY CERTIFICATE OF OCCUPANCY (TCO).

* NOTE: IF A DPS INSPECTOR (INCLUDING, BUT NOT LIMITED TO AABA, BOILER, ELEVATOR OR ANY OTHER AUTHORIZED INSPECTOR) REQUIRES MODIFICATIONS AND/OR ADDITIONS THAT WERE NOT INCLUDED IN THE CONSTRUCTION DOCUMENTS, THE DESIGNER SHOULD REVIEW THE APPLICABLE CODE(S) AND PROVIDE WRITTEN INTERPRETATION TO THE DCAM PROJECT MANAGER TOGETHER WITH THEIR RECOMMENDATIONS.

F. EXCLUSIVE OF OTHER ITEMS THAT THE DPS INSPECTOR MAY IMPOSE, THERE IS A HISTORY OF SPECIFIC ITEMS THAT ARE ESSENTIAL FOR, TEMPORARY OCCUPANCY. THESE ITEMS INCLUDE, BUT ARE NOT LIMITED TO THE FOLLOWING:

(1) PROPERLY COLORED AND POSITIONED EXIT SIGNS.

(2) PROPERLY LOCATED EMERGENCY LIGHTING FIXTURES.

(3) CLEAN DUCTS, BLOWERS, AND COILS IF UNITS WERE OPERATED WITHOUT FILTERS DURING CONSTRUCTION.

(4) INSTALL PERMANENT FILTERS AND REPLACE DISPOSABLE FILTERS IF UNITS WERE OPERATED DURING CONSTRUCTION.

(5) PROPERLY WORKING LOCK FOR THE MEDICAL ENVIRONMENTAL CLOSETS (IF APPLICABLE).

(6) ASSURE THAT EXTERIOR AND INTERIOR FIRE RATED AND EGRESS DOORS ARE OPERATING PROPERLY AND HAVE THE PROPER HARDWARE.

(7) ASSURE THAT SMOKE BARRIERS ARE PROPERLY INSTALLED AND LOCATED.

(8) ASSURE THAT PROPER WATER PRESSURE IS PROVIDED FOR THE SPRINKLER SYSTEM.

(9) ASSURE THAT PROPER HOT WATER TEMPERATURES ARE PROVIDED. UNLESS OTHERWISE SPECIFIED OR REQUIRED BY A USER AGENCY, THE TEMPERATURE SET ON BUILDING MASTER CONTROLLERS OF HOT WATER SHALL APPLY:

(A) HW TO TOILET ROOMS AND JANITORS CLOSETS SHALL BE 140˚ F.

(B) HW TO INDIVIDUAL TUBS OR SHOWERS SHALL BE CONTROLLED, IN ADDITION TO THE MASTER CONTROLLER ABOVE, WITH THERMOSTATIC VALVES SET TO FURNISH HW AT A TEMPERATURE NOT EXCEEDING 110˚ F AND EQUIPPED WITH ANTI-SCALD FEATURE.

(C) HW RINSE WATER TO DISHWASHERS SHALL BE CONTROLLED AT 180˚ F.

(10) EMERGENCY EYEWASH EQUIPMENT MUST BE HARD-PLUMBED AND EMPLOY TEMPERED WATER.

G. EVIDENCE OF COMPLIANCE WITH REQUIREMENTS OF GOVERNING AUTHORITIES INCLUDING, WITHOUT LIMITATIONS, THE FOLLOWING:

1) CERTIFICATE OF INSPECTION, IN FORM OF SIGNED PERMITS FROM THE ELECTRICAL, PLUMBING, GAS, FIRE DEPARTMENT, BOILER, AND ANY OTHER REQUIRED INSPECTORS.
2) CERTIFICATION FROM THE LOCAL FIRE DEPARTMENT TO THE EFFECT THAT ALL DETECTION, ALARM AND SUPPRESSION SYSTEMS, AND OTHER EQUIPMENT OR SYSTEMS UNDER FIRE DEPARTMENT JURISDICTION ARE APPROVED.
3) WHEN CARPETING AND/OR DRAPERIES ARE PROVIDED, A FLAME, SMOKE AND FUEL-RATING CERTIFICATE PROVIDED BY THE SUPPLYING GENERAL CONTRACTOR.
4) ELEVATOR CERTIFICATION(S) FROM THE ELEVATOR INSPECTOR OBTAINED THROUGH THE GENERAL CONTRACTOR'S ELEVATOR SUBCONTRACTOR.
5) A LETTER FROM THE PLUMBING SUBCONTRACTOR THAT THE POTABLE WATER SUPPLY HAS BEEN SANITIZED.
6) SEPTIC SYSTEM CERTIFICATION OBTAINED FROM THE TOWN BY THE GENERAL CONTRACTOR (WHEN APPLICABLE).
7) PRESSURIZED VESSEL CERTIFICATIONS FROM THE BOILER INSPECTOR OBTAINED THROUGH THE MECHANICAL SUBCONTRACTOR.
8) WHEN AIR BALANCING IS REQUIRED, THE AIR BALANCING REPORT PREPARED BY THE MECHANICAL SUBCONTRACTOR (OR COMMISSIONING AGENT, WHEN APPLICABLE).
9) WHEN SMOKE CONTROL/FIRE EMERGENCY VENTILATION SYSTEM IS REQUIRED, THE TEST REPORT PREPARED BY THE MECHANICAL SUBCONTRACTOR (OR COMMISSIONING AGENT, WHEN APPLICABLE).
10) EVIDENCE OF TEST AND APPROVAL FOR DEPARTMENT OF ENVIRONMENTAL PROTECTION (DEP) AND DEPARTMENT OF PUBLIC HEALTH (DPH), WHEN APPLICABLE.

F. PREREQUISITES FOR DCAM CERTIFICATE OF AGENCY USE AND OCCUPANCY: DCAM CERTIFICATE OF AGENCY USE AND OCCUPANCY E-1 FORM. PRIOR TO REQUESTING A DIVISION OF CAPITAL ASSET MANAGEMENT (DCAM) CERTIFICATE OF AGENCY USE AND OCCUPANCY, THE DCAM RESIDENT ENGINEER WILL PROCURE AND HAVE READY AND AVAILABLE THE FOLLOWING APPROVED ITEMS (REFERRED TO AS CLOSEOUT SUBMITTALS):

1. OPERATING AND MAINTENANCE (O & M) MANUALS AND WRITTEN OPERATING INSTRUCTIONS FOR THE VARIOUS SYSTEMS.
2. CATALOG DATA SHEETS FOR EACH ITEM OF MECHANICAL OR ELECTRICAL EQUIPMENT ACTUALLY INSTALLED INCLUDING PERFORMANCE CURVES, RATING DATA AND PARTS LISTS.
3. CATALOG SHEETS, MAINTENANCE MANUALS, AND APPROVED SHOP DRAWINGS OF ALL MECHANICAL AND ELECTRICAL EQUIPMENT CONTROLS AND FIXTURES WITH ALL DETAILS CLEARLY INDICATED, INCLUDING SIZE OF LAMPS.
4. BALANCING REPORT.
5. NAMES, ADDRESSES, AND TELEPHONE NUMBERS OF REPAIR AND SERVICE COMPANIES FOR EACH OF THE MAJOR SYSTEMS INSTALLED UNDER THE CONSTRUCTION CONTRACT.
6. SIGNED DEPARTMENT OF PUBLIC SAFETY (DPS) CERTIFICATE OF OCCUPANCY PER 780 CMR 120.0
7. LICENSED BUILDER FINAL AFFIDAVIT/REPORT.
8. DESIGNER AFFIDAVIT OF COMPLIANCE.
9. SUBCONTRACTOR AFFIDAVITS THAT SPECIFIED EQUIPMENT AND INSTALLED ITEMS HAVE BEEN SEISMICALLY BRACED IN ACCORDANCE WITH CODE REQUIREMENTS.
10. MONETIZED PUNCH LIST OF THE REMAINING WORK THAT MUST BE DONE BEFORE FINAL ACCEPTANCE.
11. AS-BUILT DOCUMENTS SHOULD BE COMPLETED (BOTH ELECTRONIC FILES AND TRANSPARENCIES) AND READY TO TRANSFER OVER TO THE DCAM PROJECT MANAGER. AS-BUILT DOCUMENTS SHALL CONSIST OF, BUT NOT BE LIMITED TO, THE FOLLOWING:
    a. DRAWINGS (IN AUTOCAD VER. 2000 OR LATER FORMAT)

1) CONTRACT DRAWINGS, FOR ALL DISCIPLINES, MARKED-UP TO CLEARLY INDICATE AS-BUILT CONDITIONS.
2) ALL CLARIFICATION AND/OR CHANGED CONDITIONS SKETCHES (SK'S).

b. SPECIFICATIONS (IN .PDF FORMAT)
1) ALL CONSTRUCTION SPECIFICATIONS.
2) ALL ADDENDA.

c. SHOP DRAWINGS, SUBMITTALS, ETC. (SCANNED FORMAT)*
1) ALL APPROVED SHOP DRAWINGS, SUBMITTALS, ETC.

12. APPROVED DOCUMENTS SUBMITTED TO THE DCAM OR THE DESIGNER SHALL BE ELECTRONICALLY SCANNED (INCLUDING THE ASSOCIATED TRANSMITTALS AND, WHERE APPLICABLE, THE DESIGNER-OF-RECORD'S AND DCAM'S COMMENTS) AS A .PDF DOCUMENT. ALL SCANNED APPROVED SUBMITTALS SHALL BE INCLUDED ON A CD.
13. THE ELECTRONIC FILE NAMES, FOR EACH APPROVED SUBMITTAL, SHALL CONTAIN THE FOLLOWING INFORMATION:
a. FOR APPROVED OR APPROVED AS NOTED SHOP DRAWINGS:
1) PROJECT NUMBER SUBMITTAL'S DATE, APPROVED, SUBMITTAL NAME, SUBMITTAL'S SPECIFICATION SECTION NAME AND NUMBER, AND SUBMITTAL'S REVISION NUMBER.
2) AS AN EXAMPLE, THE FILE NAME OF AN APPROVED SUBMITTAL FOR CONCRETE
a) DESIGN MIX: DFS991DC1 030106 APPROVED CONCRETE DESIGN MIX CAST IN PLACE CONCRETE 033000 REV0.PDF

b. FOR SHOP DRAWINGS SUBMITTED FOR INFORMATION ONLY, E.G. WELDERS CERTIFICATE, THE ELECTRONIC FILE NAME SHALL CONTAIN THE FOLLOWING INFORMATION:
1) PROJECT NUMBER SUBMITTAL'S DATE, FORINFO, SUBMITTAL NAME, SUBMITTAL'S SPECIFICATION SECTION NAME AND NUMBER, AND SUBMITTAL'S REVISION NUMBER.
2) AS AN EXAMPLE THE FILE NAME OF A FOR INFORMATION ONLY SUBMITTAL FOR A WELDER'S CERTIFICATE:
a) DFS991DC1 030106 FOR INFO WELDERS CERTIFICATE QUALITY REQUIREMENTS 014000 REV0.PDF

c. UNLESS OTHERWISE STATED ALL SUBMITTED DOCUMENTS SHALL INCLUDE AN ELECTRONIC SCANNED IMAGE AS NOTED ABOVE.
d. THE ELECTRONIC FILE NAME SHALL BE PRINTED ON EVERY SHOP-DRAWING PAGE.

14. THE DCAM PROJECT MANAGER WILL ATTACH THE MONETIZED PUNCH LIST TO THE DCAM CERTIFICATE OF AGENCY USE AND OCCUPANCY, INDICATE THE OFFICIAL DATE OF USE AND OCCUPANCY, ESTABLISH THE DATE UPON WHICH ALL REMAINING PUNCH LIST ITEMS MUST BE COMPLETED (NORMALLY 30-45 CALENDAR DAYS), AND PROCURE APPROPRIATE SIGNATURES ON THE ORIGINAL AND SEVEN (7) COPIES.
15. AFTER RECEIPT OF SIGNATURES, THE DCAM PROJECT MANAGER WILL DISTRIBUTE THE SIGNED COPIES.
16. PROJECT SCHEDULES (IN PRIMAVERA FORMAT, UNLESS OTHERWISE AUTHORIZED), BASELINE, AND ALL UPDATES.
17. NOTIFICATION TO OPERATING AGENCY AND/OR USER AGENCY OF PROPOSED USE AND OCCUPANCY DATE: THE DCAM PROJECT MANAGER IS TO NOTIFY THE OPERATING AGENCY AND/OR USER AGENCY OF THE PROJECT USE AND OCCUPANCY DATE AT LEAST SEVEN (7) CALENDAR DAYS IN ADVANCE.

G. PREREQUISITES FOR DCAM CERTIFICATE OF FINAL INSPECTION, RELEASE, AND ACCEPTANCE: DCAM FINAL CERTIFICATE OF FINAL INSPECTION, RELEASE, AND ACCEPTANCE (E-2 FORM). UPON RECEIPT OF THE DCAM CERTIFICATE OF AGENCY USE AND OCCUPANCY, AND ITS ADJUNCT MONETIZED PUNCH LIST, THE GENERAL CONTRACTOR SHALL CAUSE THE COMPLETION OF ALL OF THE OTHER PUNCH LIST ITEMS WITHIN TIMEFRAME REQUIRED BY SAID CERTIFICATE, BUT NOT MORE THAN 45 CALENDARS DAYS IF THE TIMEFRAME IS NOT INDICATED ON THE SAID CERTIFICATE.

1. IF THE GENERAL CONTRACTOR FAILS TO PURSUE COMPLETION OF THE REMAINING MONETIZED PUNCH LIST WORK, ON A CONTINUAL BASIS, WITHIN THE TIMEFRAME REQUIRED BY THE CERTIFICATE, DCAM MAY, AFTER SEVEN (7) CALENDAR DAYS WRITTEN NOTICE, ELECT TO COMPLETE THE WORK WITH SEPARATE FORCES AND CHARGE THE WORK AGAINST THE GENERAL CONTRACTOR.

2. AT THE END OF THE GENERAL CONTRACTOR'S ONE (1) YEAR GUARANTEE PERIOD, THE GENERAL CONTRACTOR SHALL TRANSFER MANUFACTURERS' EQUIPMENT AND MATERIAL WARRANTIES THAT ARE STILL IN FORCE TO THE OPERATING AGENCY.

1.7 GUARANTEES AND WARRANTIES

A. SUBMIT TO THE DESIGNER ALL EXTENDED GUARANTEES AND WARRANTIES THAT HAVE BEEN SPECIFIED IN VARIOUS, INDIVIDUAL SECTIONS OF THE SPECIFICATIONS. GUARANTEES SHALL BE ASSEMBLED BY SPECIFICATION NO. AND SECTION IN ACCORDANCE WITH SPECIFICATIONS TABLE OF CONTENTS.

1. GUARANTEES AND WARRANTIES SHALL BE ENFORCEABLE IN THE COMMONWEALTH OF MASSACHUSETTS AND SUBJECT TO INTERPRETATION IN ACCORDANCE WITH THE LAWS OF THE COMMONWEALTH OF MASSACHUSETTS.
2. GUARANTEES AND WARRANTIES SHALL BEGIN AT THE DATE OF SUBSTANTIAL COMPLETION OF THE PROJECT. GUARANTEES AND WARRANTIES WHICH START AT THE DATE OF SHIPMENT FROM THE FACTORY, OR FROM THE COMPLETION DATE OF AN INDIVIDUAL PORTION OF THE PROJECT, ARE NOT ACCEPTABLE.

B. UNLESS MORE STRINGENT REQUIREMENTS ARE OTHERWISE SPECIFIED, GUARANTEE ALL WORK AGAINST DEFECTS OF MATERIALS, EQUIPMENT AND WORKMANSHIP FOR ONE YEAR FROM THE DATE OF SUBSTANTIAL COMPLETION OR THE DATE OF ISSUE OF CERTIFICATE OF USE AND OCCUPANCY FOR THE BUILDING OR PORTION THEREOF, WHICHEVER OCCURS FIRST.

C. IF, WITHIN ANY GUARANTEE PERIOD, REPAIRS OR CHANGES ARE REQUIRED IN CONNECTION WITH GUARANTEED WORK, GENERAL CONTRACTOR SHALL PROMPTLY UPON RECEIPT OF NOTICE FROM DCAM, AND WITHOUT ADDITIONAL EXPENSE TO DCAM, WITHIN TEN BUSINESS DAYS:

1. PLACE IN SATISFACTORY CONDITION IN EVERY PARTICULAR ALL GUARANTEED WORK AND CORRECT ALL DEFECTS.
2. MAKE GOOD ALL DAMAGE TO BUILDING, SITE EQUIPMENT, OR CONTENTS THEREOF, INCLUDING REDECORATION WHICH, IN THE OPINION OF THE DESIGNER, RESULTS FROM THE USE OF MATERIAL, EQUIPMENT OR WORKMANSHIP WHICH ARE INFERIOR, DEFECTIVE OR NOT IN ACCORD WITH THE TERMS OF THE CONTRACT.

D. IF GENERAL CONTRACTOR, AFTER SUCH NOTICE, FAILS TO PROCEED IMMEDIATELY TO COMPLY WITH TERMS OF GUARANTEE, DCAM MAY CORRECT DEFECTS AND HOLD GENERAL CONTRACTOR LIABLE FOR ALL EXPENSES INCURRED.

E. PROMPTLY AFTER COMPLETION OF THE WORK, OBTAIN FROM EACH SUBCONTRACTOR WHERE A GUARANTEE IS REQUIRED, A WARRANTY ADDRESSED TO AND IN FAVOR OF DCAM OR THE USER AGENCY IF DIRECTED BY DCAM.

F. DELIVERY OF ANY WARRANTY REQUIRED DOES NOT RELIEVE THE GENERAL CONTRACTOR FROM ANY OBLIGATION ASSUMED UNDER OTHER PROVISIONS OF THE CONTRACT.

G. DELIVER GUARANTEES AND WARRANTEES TO THE DESIGNER BEFORE OR WITH THE APPLICATION FOR FINAL PAYMENT.

H. THE GENERAL WARRANTY SET FORTH IN THE GENERAL CONDITIONS IS IN ADDITION TO, EXCLUSIVE OF, AND NOT IN SUBSTITUTION OF SUCH GUARANTEES AS MAY BE REQUIRED IN THE SPECIFICATIONS.

PART 2 - PRODUCTS (NOT USED)

PART 3 - EXECUTION (NOT USED)

END OF SECTION

SECTION 017900

DEMONSTRATION AND TRAINING

PART 1 - GENERAL

1.1 RELATED DOCUMENTS

A. DRAWINGS AND GENERAL PROVISIONS OF THE CONTRACT, INCLUDING AND OTHER DIVISION 01 SPECIFICATION SECTIONS, APPLY TO THIS SECTION.

1.2 SUMMARY

A. SECTION INCLUDES ADMINISTRATIVE AND PROCEDURAL REQUIREMENTS FOR INSTRUCTING OWNER'S PERSONNEL, INCLUDING THE FOLLOWING:

1. DEMONSTRATION OF OPERATION OF SYSTEMS, SUBSYSTEMS, AND EQUIPMENT.
2. TRAINING IN OPERATION AND MAINTENANCE OF SYSTEMS, SUBSYSTEMS, AND EQUIPMENT.

B. RELATED SECTIONS:

1. DIVISIONS 02 THROUGH 49 SECTIONS FOR SPECIFIC REQUIREMENTS FOR DEMONSTRATION AND TRAINING FOR PRODUCTS IN THOSE SECTIONS.

1.3 INFORMATIONAL SUBMITTALS

A. INSTRUCTION PROGRAM: SUBMIT OUTLINE OF INSTRUCTIONAL PROGRAM FOR DEMONSTRATION AND TRAINING, INCLUDING A LIST OF TRAINING MODULES AND A SCHEDULE OF PROPOSED DATES, TIMES, LENGTH OF INSTRUCTION TIME, AND INSTRUCTORS' NAMES FOR EACH TRAINING MODULE. INCLUDE LEARNING OBJECTIVE AND OUTLINE FOR EACH TRAINING MODULE.

1. INDICATE PROPOSED TRAINING MODULES UTILIZING MANUFACTURER-PRODUCED DEMONSTRATION AND TRAINING VIDEO RECORDINGS FOR SYSTEMS, EQUIPMENT, AND PRODUCTS IN LIEU OF VIDEO RECORDING OF LIVE INSTRUCTIONAL MODULE.

B. QUALIFICATION DATA:

C. ATTENDANCE RECORD: FOR EACH TRAINING MODULE, SUBMIT LIST OF PARTICIPANTS AND LENGTH OF INSTRUCTION TIME.

D. EVALUATIONS: FOR EACH PARTICIPANT AND FOR EACH TRAINING MODULE, SUBMIT RESULTS AND DOCUMENTATION OF PERFORMANCE-BASED TEST.

1.4 QUALITY ASSURANCE

A. FACILITATOR QUALIFICATIONS: A FIRM OR INDIVIDUAL EXPERIENCED IN TRAINING OR EDUCATING MAINTENANCE PERSONNEL IN A TRAINING PROGRAM SIMILAR IN CONTENT AND EXTENT TO THAT INDICATED FOR THIS PROJECT, AND WHOSE WORK HAS RESULTED IN TRAINING OR EDUCATION WITH A RECORD OF SUCCESSFUL LEARNING PERFORMANCE.

B. INSTRUCTOR QUALIFICATIONS: A FACTORY-AUTHORIZED SERVICE REPRESENTATIVE, COMPLYING WITH REQUIREMENTS IN DIVISION 01 SECTION "QUALITY REQUIREMENTS," EXPERIENCED IN OPERATION AND MAINTENANCE PROCEDURES AND TRAINING.

C. PREINSTRUCTION CONFERENCE: CONDUCT CONFERENCE AT PROJECT SITE TO COMPLY WITH REQUIREMENTS IN DIVISION 01 SECTION "PROJECT MANAGEMENT AND COORDINATION." REVIEW METHODS AND PROCEDURES RELATED TO DEMONSTRATION AND TRAINING INCLUDING, BUT NOT LIMITED TO, THE FOLLOWING:

1. INSPECT AND DISCUSS LOCATIONS AND OTHER FACILITIES REQUIRED FOR INSTRUCTION.
2. REVIEW AND FINALIZE INSTRUCTION SCHEDULE AND VERIFY AVAILABILITY OF EDUCATIONAL MATERIALS, INSTRUCTORS' PERSONNEL, AUDIOVISUAL EQUIPMENT, AND FACILITIES NEEDED TO AVOID DELAYS.
3. REVIEW REQUIRED CONTENT OF INSTRUCTION.
4. FOR INSTRUCTION THAT MUST OCCUR OUTSIDE, REVIEW WEATHER AND FORECASTED WEATHER CONDITIONS AND PROCEDURES TO FOLLOW IF CONDITIONS ARE UNFAVORABLE.

1.5 COORDINATION

A. COORDINATE INSTRUCTION SCHEDULE WITH OWNER'S OPERATIONS. ADJUST SCHEDULE AS REQUIRED TO MINIMIZE DISRUPTING OWNER'S OPERATIONS.

B. COORDINATE INSTRUCTORS, INCLUDING PROVIDING NOTIFICATION OF DATES, TIMES, LENGTH OF INSTRUCTION TIME, AND COURSE CONTENT.

C. COORDINATE CONTENT OF TRAINING MODULES WITH CONTENT OF APPROVED EMERGENCY, OPERATION, AND MAINTENANCE MANUALS. DO NOT SUBMIT INSTRUCTION PROGRAM UNTIL OPERATION AND MAINTENANCE DATA HAS BEEN REVIEWED AND APPROVED BY PROJECT ENGINEER.

PART 2 - PRODUCTS

2.1 INSTRUCTION PROGRAM

A. PROGRAM STRUCTURE: DEVELOP AN INSTRUCTION PROGRAM THAT INCLUDES INDIVIDUAL TRAINING MODULES FOR EACH SYSTEM AND FOR EQUIPMENT NOT PART OF A SYSTEM, AS REQUIRED BY INDIVIDUAL SPECIFICATION SECTIONS.

B. TRAINING MODULES: DEVELOP A LEARNING OBJECTIVE AND TEACHING OUTLINE FOR EACH MODULE. INCLUDE A DESCRIPTION OF SPECIFIC SKILLS AND KNOWLEDGE THAT PARTICIPANT IS EXPECTED TO MASTER. FOR EACH MODULE, INCLUDE INSTRUCTION FOR THE FOLLOWING AS APPLICABLE TO THE SYSTEM, EQUIPMENT, OR COMPONENT:

1. BASIS OF SYSTEM DESIGN, OPERATIONAL REQUIREMENTS, AND CRITERIA: INCLUDE THE FOLLOWING:

   a. SYSTEM, SUBSYSTEM, AND EQUIPMENT DESCRIPTIONS.
   b. PERFORMANCE AND DESIGN CRITERIA IF CONTRACTOR IS DELEGATED DESIGN RESPONSIBILITY.
   c. OPERATING STANDARDS.
   d. REGULATORY REQUIREMENTS.
   e. EQUIPMENT FUNCTION.
   f. OPERATING CHARACTERISTICS.

g. LIMITING CONDITIONS.
h. PERFORMANCE CURVES.

2. DOCUMENTATION: REVIEW THE FOLLOWING ITEMS IN DETAIL:

a. EMERGENCY MANUALS.
b. OPERATIONS MANUALS.
c. MAINTENANCE MANUALS.
d. PROJECT RECORD DOCUMENTS.
e. IDENTIFICATION SYSTEMS.
f. WARRANTIES AND BONDS.
g. MAINTENANCE SERVICE AGREEMENTS AND SIMILAR CONTINUING COMMITMENTS.

3. EMERGENCIES: INCLUDE THE FOLLOWING, AS APPLICABLE:

a. INSTRUCTIONS ON MEANING OF WARNINGS, TROUBLE INDICATIONS, AND ERROR MESSAGES.
b. INSTRUCTIONS ON STOPPING.
c. SHUTDOWN INSTRUCTIONS FOR EACH TYPE OF EMERGENCY.
d. OPERATING INSTRUCTIONS FOR CONDITIONS OUTSIDE OF NORMAL OPERATING LIMITS.
e. SEQUENCES FOR ELECTRIC OR ELECTRONIC SYSTEMS.
f. SPECIAL OPERATING INSTRUCTIONS AND PROCEDURES.

4. OPERATIONS: INCLUDE THE FOLLOWING, AS APPLICABLE:

a. STARTUP PROCEDURES.
b. EQUIPMENT OR SYSTEM BREAK-IN PROCEDURES.
c. ROUTINE AND NORMAL OPERATING INSTRUCTIONS.
d. REGULATION AND CONTROL PROCEDURES.
e. CONTROL SEQUENCES.
f. SAFETY PROCEDURES.
g. INSTRUCTIONS ON STOPPING.
h. NORMAL SHUTDOWN INSTRUCTIONS.
i. OPERATING PROCEDURES FOR EMERGENCIES.
j. OPERATING PROCEDURES FOR SYSTEM, SUBSYSTEM, OR EQUIPMENT FAILURE.
k. SEASONAL AND WEEKEND OPERATING INSTRUCTIONS.
l. REQUIRED SEQUENCES FOR ELECTRIC OR ELECTRONIC SYSTEMS.
m. SPECIAL OPERATING INSTRUCTIONS AND PROCEDURES.

5. ADJUSTMENTS: INCLUDE THE FOLLOWING:

a. ALIGNMENTS.
b. CHECKING ADJUSTMENTS.
c. NOISE AND VIBRATION ADJUSTMENTS.
d. ECONOMY AND EFFICIENCY ADJUSTMENTS.

6. TROUBLESHOOTING: INCLUDE THE FOLLOWING:

a. DIAGNOSTIC INSTRUCTIONS.
b. TEST AND INSPECTION PROCEDURES.

7. MAINTENANCE: INCLUDE THE FOLLOWING:

a. INSPECTION PROCEDURES.
b. TYPES OF CLEANING AGENTS TO BE USED AND METHODS OF CLEANING.
c. LIST OF CLEANING AGENTS AND METHODS OF CLEANING DETRIMENTAL TO PRODUCT.
d. PROCEDURES FOR ROUTINE CLEANING

e. PROCEDURES FOR PREVENTIVE MAINTENANCE.
f. PROCEDURES FOR ROUTINE MAINTENANCE.
g. INSTRUCTION ON USE OF SPECIAL TOOLS.

8. REPAIRS: INCLUDE THE FOLLOWING:

a. DIAGNOSIS INSTRUCTIONS.
b. REPAIR INSTRUCTIONS.
c. DISASSEMBLY; COMPONENT REMOVAL, REPAIR, AND REPLACEMENT; AND REASSEMBLY INSTRUCTIONS.
d. INSTRUCTIONS FOR IDENTIFYING PARTS AND COMPONENTS.
e. REVIEW OF SPARE PARTS NEEDED FOR OPERATION AND MAINTENANCE.

PART 3 - EXECUTION

3.1 PREPARATION

A. ASSEMBLE EDUCATIONAL MATERIALS NECESSARY FOR INSTRUCTION, INCLUDING DOCUMENTATION AND TRAINING MODULE. ASSEMBLE TRAINING MODULES INTO A TRAINING MANUAL ORGANIZED IN COORDINATION WITH REQUIREMENTS IN DIVISION 01 SECTION "OPERATIONS AND MAINTENANCE DATA."

B. SET UP INSTRUCTIONAL EQUIPMENT AT INSTRUCTION LOCATION.

3.2 INSTRUCTION

A. FACILITATOR: ENGAGE A QUALIFIED FACILITATOR TO PREPARE INSTRUCTION PROGRAM AND TRAINING MODULES, TO COORDINATE INSTRUCTORS, AND TO COORDINATE BETWEEN CONTRACTOR AND OWNER FOR NUMBER OF PARTICIPANTS, INSTRUCTION TIMES, AND LOCATION.

B. ENGAGE QUALIFIED INSTRUCTORS TO INSTRUCT OWNER'S PERSONNEL TO ADJUST, OPERATE, AND MAINTAIN SYSTEMS, SUBSYSTEMS, AND EQUIPMENT NOT PART OF A SYSTEM.

1. ARCHITECT WILL FURNISH AN INSTRUCTOR TO DESCRIBE BASIS OF SYSTEM DESIGN, OPERATIONAL REQUIREMENTS, CRITERIA, AND REGULATORY REQUIREMENTS.
2. OWNER WILL FURNISH AN INSTRUCTOR TO DESCRIBE OWNER'S OPERATIONAL PHILOSOPHY.
3. OWNER WILL FURNISH CONTRACTOR WITH NAMES AND POSITIONS OF PARTICIPANTS.

C. SCHEDULING: PROVIDE INSTRUCTION AT MUTUALLY AGREED ON TIMES. FOR EQUIPMENT THAT REQUIRES SEASONAL OPERATION, PROVIDE SIMILAR INSTRUCTION AT START OF EACH SEASON.

1. SCHEDULE TRAINING WITH OWNER, THROUGH PROJECT ENGINEER, WITH AT LEAST **SEVEN** CALENDAR DAYS' ADVANCE NOTICE.

D. EVALUATION: AT CONCLUSION OF EACH TRAINING MODULE, ASSESS AND DOCUMENT EACH PARTICIPANT'S MASTERY OF MODULE BY USE OF **A DEMONSTRATION** PERFORMANCE-BASED TEST.

E. CLEANUP: COLLECT USED AND LEFTOVER EDUCATIONAL MATERIALS. REMOVE INSTRUCTIONAL EQUIPMENT. RESTORE SYSTEMS AND EQUIPMENT TO CONDITION EXISTING BEFORE INITIAL TRAINING USE.

END OF SECTION 017900

SECTION 018100

COMMISSIONING

TABLE OF CONTENTS

PART 1 - GENERAL
1.01 GENERAL PROVISIONS
1.02 DESCRIPTION OF WORK
1.03 COORDINATION
1.04 COMMISSIONING PROCESS
1.05 RELATED WORK
1.06 COMMISSIONING COMPLETION
1.07 SYSTEMS TO BE COMMISSIONED
1.08 RESPONSIBILITIES
1.09 TESTING REQUIREMENTS
1.10 TESTING PREREQUISITES
1.11 MONITORING
1.12 DEFINITIONS

PART 2 - PRODUCTS
2.01 TEST EQUIPMENT

PART 3 - EXECUTION
3.01 MEETINGS
3.02 REPORTING
3.03 SUBMITTALS
3.04 START-UP, PREFUNCTIONAL CHECKLISTS AND INITIAL CHECKOUT
3.05 FUNCTIONAL PERFORMANCE TESTING
3.06 DOCUMENTATION, NON-CONFORMANCE AND APPROVAL OF TESTS
3.07 DEFERRED TESTING
3.08 OPERATION AND MAINTENANCE MANUALS
3.09 TRAINING OF OWNER PERSONNEL

PLUMBING
3.10 RAIN WATER COLLECTION SYSTEM
3.11 SUMP PUMP
3.12 PLUMBING WATER SYSTEM

MECHANICAL
3.13 HOT WATER HEATING SYSTEM (BOILERS, PUMPS, DISTRIBUTION)
3.14 TERMINAL UNITS (FCU, FPT, VAV, CUH, UH)
3.15 PACKAGED DX SPLIT SYSTEM AIR CONDITIONING OR HEAT PUMP
3.16 EXHAUST FANS
3.17 BUILDING AUTOMATION SYSTEM (BAS)
3.18 TEST AND BALANCE WORK (TAB)
3.19 AIR HANDLING UNITS (RECIRCULATING AND 100% O.A.)

ELECTRICAL
3.20 EMERGENCY GENERATOR
3.21 EMERGENCY LIGHTING
3.22 SHORT CIRCUIT TRIP
3.23 LIGHTING CONTROL SYSTEM
3.24 AUTOMATIC TRANSFER SWITCH(ES)
3.25 RENEWABLE ENERGY SYSTEM

PART 1 - GENERAL

1.1 GENERAL PROVISIONS

A. ATTENTION IS DIRECTED TO THE CONTRACT AND GENERAL CONDITIONS AND ALL SECTIONS WITHIN DIVISION 01 - GENERAL REQUIREMENTS, WHICH ARE HEREBY MADE A PART OF THIS SECTION OF THE SPECIFICATIONS.

1.2 DESCRIPTION OF WORK

A. COMMISSIONING: COMMISSIONING IS A PLANNED, COLLABORATIVE PROCESS OF WITNESSING AND TESTING THAT CONFIRMS THAT A NEW BUILDING AND ITS SYSTEMS MEET THE OWNER'S PROJECT REQUIREMENTS (OPR) AND THE PROJECT'S BASIS OF DESIGN (BOD). THE OPR IS A WRITTEN DOCUMENT THAT DETAILS THE IDEAS, CONCEPTS AND CRITERIA THAT ARE DEFINED BY THE OWNER TO BE IMPORTANT TO THE SUCCESS OF THE PROJECT. THE BOD INCLUDES DESIGN INFORMATION NECESSARY TO ACCOMPLISH THE OPR, INCLUDING SYSTEM DESCRIPTIONS, INDOOR ENVIRONMENTAL QUALITY CRITERIA, DESIGN ASSUMPTIONS, AND REFERENCES TO APPLICABLE CODES, STANDARDS, REGULATIONS AND GUIDELINES. ACHIEVEMENT OF THESE GOALS BEGINS IN THE PRE-DESIGN PHASE, CONTINUES THROUGH THE DESIGN, CONSTRUCTION AND ACCEPTANCE PHASES AND CONCLUDES IN THE POST-ACCEPTANCE PHASE WITH ACTUAL VERIFICATION OF PERFORMANCE. COMMISSIONING SHALL ENCOMPASS AND COORDINATE THE TRADITIONALLY SEPARATE FUNCTIONS OF SYSTEM DOCUMENTATION, EQUIPMENT STARTUP, CONTROL SYSTEM CALIBRATION, TESTING AND BALANCING, PERFORMANCE TESTING AND TRAINING. THE COMMISSIONING PROCESS WILL BE DIRECTED BY AN INDEPENDENT, THIRD-PARTY COMMISSIONING AUTHORITY (CA) WHOSE SERVICES WILL BE PROVIDED BY DCAM.

1. IN ADDITION TO COLLABORATING IN THE DEVELOPMENT OF THE PROJECT'S BOD AND OPR, DURING THE PRE-DESIGN PHASE THE COMMISSIONING AUTHORITY SHALL REVIEW THE SIZE AND SKILL LEVELS OF THE OWNER'S MAINTENANCE STAFF IN RELATION TO THE REQUIREMENTS OF THE NEW BUILDING IN ORDER TO FILL ANY DEFICIENCIES.
2. IN THE DESIGN PHASE THE COMMISSIONING AUTHORITY SHALL COMPLETE THE FOLLOWING TASKS:
   a. WRITE COMMISSIONING SPECIFICATIONS THAT DEFINE CONTRACTOR RESPONSIBILITIES AND PROVIDE SAMPLES OF REQUIRED COMMISSIONING DOCUMENTATION (BASED ON THE MOST RECENT INDUSTRY-ACCEPTED FORMAT) TO THE DESIGNER FOR INTEGRATION INTO THE PROJECT SPECIFICATIONS.
   b. DEVELOP THE COMMISSIONING PLAN, DETAILING COMMISSIONING TEAM ORGANIZATION, SCHEDULE, TRAINING AND DOCUMENTATION REQUIREMENTS. INCLUDE ALL RELATED TESTING, VERIFICATION AND QUALITY CONTROL PROCEDURES.
   c. ESTABLISH THE SCHEDULE FOR ALL COMMISSIONING ACTIVITIES, INCLUDING PERIODIC DESIGN REVIEWS. INSURE THAT COMMISSIONING ACTIVITIES DO NOT INTERFERE WITH ANY PHASE OF THE PROJECT.
   d. REVIEW THE DESIGN CALCULATIONS AND PERFORMANCE CRITERIA FOR THE PROJECT, IDENTIFYING OPERATION AND MAINTENANCE PROBLEMS. PROVIDE WRITTEN COMMENTS AND A CHECKLIST OF REQUIRED ACTIONS TO BE COMPLETED BY THE DESIGNER PRIOR TO PHASE APPROVAL AND RECOMMEND ALTERNATIVES WHERE APPROPRIATE.
   e. CHECK AND CONFIRM THAT THE BOD INCLUDES ALL OF THE ELEMENTS DEFINED IN THE OPR AT THE END OF THE DESIGN PHASE.
3. IN THE CONSTRUCTION PHASE THE COMMISSIONING AUTHORITY SHALL COMPLETE THE FOLLOWING TASKS:
   a. UPDATE THE COMMISSIONING PLAN TO REFLECT ANY CHANGES IN THE BOD.
   b. COORDINATE THE COMMISSIONING PROCESS WITH THE PROJECT TEAM THROUGH PROJECT PLANNING AND SCHEDULED MEETINGS.
   c. REVIEW CONTRACTOR SUBMITTALS IN COLLABORATION WITH THE PROJECT TEAM FOR CONFORMANCE TO PROJECT SPECIFICATIONS AND OPERATION AND MAINTENANCE REQUIREMENTS AND REPORT FINDINGS.

d. OBSERVE AND DOCUMENT SYSTEM VERIFICATION CHECKS.
e. OBSERVE AND DOCUMENT EQUIPMENT AND SYSTEM START-UPS.
f. DOCUMENT TESTING AND BALANCING WORK.

4. IN THE ACCEPTANCE PHASE THE COMMISSIONING AUTHORITY SHALL COMPLETE THE FOLLOWING TASKS:
   a. MONITOR AND DOCUMENT FUNCTIONAL PERFORMANCE TESTS ON ALL BUILDING SYSTEMS IN COLLABORATION WITH THE PROJECT TEAM.
   b. REVIEW O&M DOCUMENTATION AND DEVELOP O&M TRAINING PLANS AND VIDEOS. ENSURE THAT THE OWNER'S STAFF IS ABLE TO OPERATE AND MAINTAIN ALL BUILDING SYSTEMS.
   c. REVIEW ALL AS-BUILT DOCUMENTS AND WARRANTY INFORMATION IN COLLABORATION WITH THE PROJECT TEAM. SUBMIT WARRANTY INFORMATION AND PREVENTIVE MAINTENANCE SCHEDULES FOR ALL BUILDING SYSTEMS IN A COMPREHENSIVE, FIVE-YEAR PREVENTIVE MAINTENANCE PLAN. THE FORMAT FOR THIS SUBMITTAL SHALL BE APPROVED JOINTLY BY DCAM AND THE OWNER. THIS SUBMITTAL SHALL ALSO INCLUDE LIST(S) OF RECOMMENDED SPARE PARTS, BENCH STOCK AND SPECIAL TOOLS/EQUIPMENT REQUIRED FOR THE FIRST YEAR OF BUILDING OPERATION.
   d. CONVENE AND CHAIR A COMPREHENSIVE FINAL DEBRIEFING WITH THE ENTIRE PROJECT TEAM (INCLUDING THE OWNER'S MAINTENANCE STAFF) TO COORDINATE CORRECTION OF ANY REQUIRED RE-TESTING AND IDENTIFICATION OF ANY TRAINING DEFICIENCIES PRIOR TO BUILDING TURNOVER.
   e. IN COLLABORATION WITH THE DESIGNER, CONTRACTOR(S) AND GENERAL CONTRACTOR POPULATE ALL OPERATIONAL INFORMATION, INCLUDING EQUIPMENT DATA, FOR EACH BUILDING SYSTEM IN THE DIGITAL FORMAT SPECIFIED BY DCAM.
5. IN THE POST-ACCEPTANCE PHASE THE COMMISSIONING AUTHORITY SHALL COMPLETE THE FOLLOWING TASKS:
   a. COORDINATE WITH THE PROJECT TEAM TO ENSURE THAT ANY REQUIRED "OFF-SEASON" TESTS ARE COMPLETED.
   b. ENSURE THAT ANY REQUIRED CHANGES ARE PROVIDED AS WRITTEN UPDATES IN THE PROJECT DOCUMENTATION.
   c. CONFIRM THAT ALL EQUIPMENT CONTINUES TO PERFORM AS DESIGNED AND ALERT THE OWNER TO ANY WARRANTY CLAIMS BY PROVIDING A REVIEW OF ALL SYSTEM WARRANTIES PRIOR TO THEIR ONE-YEAR EXPIRATION DATE.
   d. DOCUMENT THE ESTIMATED SAVINGS GENERATED BY THE COMMISSIONING PROCESS THROUGH SPECIFIC EXAMPLES OF AVOIDED COSTS COLLECTED DURING ALL PROJECT PHASES. THE REQUIRED FORMAT WILL BE PROVIDED BY DCAM. COMPARE THE ACTUAL TESTED PERFORMANCE OF THE BUILDING'S COMPLETED SYSTEMS WITH ESTABLISHED STANDARDS.
   e. IMPLEMENT A MEASUREMENT AND VERIFICATION (M&V) PLAN CONSISTENT WITH OPTION D: ENERGY CONSERVATION MEASURE ISOLATION AS SPECIFIED IN THE INTERNATIONAL PERFORMANCE MEASUREMENT & VERIFICATION PROTOCOL (IPMVP) VOLUME III: CONCEPTS AND OPTIONS FOR DETERMINING ENERGY SAVINGS IN NEW CONSTRUCTION, APRIL, 2003. THE M&V PERIOD MUST COVER AT LEAST ONE YEAR OF POST-CONSTRUCTION OCCUPANCY.
6. THE COMMISSIONING PROCESS DOES NOT ELIMINATE OR REDUCE THE RESPONSIBILITY OF THE SYSTEM DESIGNERS AND INSTALLING CONTRACTORS TO PROVIDE A FINISHED AND FULLY FUNCTIONING PRODUCT.

B. COMMISSIONING AUTHORITY: THE COMMISSIONING AUTHORITY DIRECTS AND APPROVES THE COMMISSIONING WORK.

C. RESPONSIBILITY OF DISCIPLINES: THE PARTIES LISTED BELOW ARE PART OF THE COMMISSIONING TEAM AND WILL BE REQUIRED TO PARTICIPATE IN THE COMMISSIONING PROCESS. THE RESPONSIBILITIES RELATIVE TO COMMISSIONING FOR EACH OF THESE PARTIES IS DEFINED IN THIS SECTION.

1. DESIGNER
2. ENGINEER
3. OWNER

4. COMMISSIONING AUTHORITY
5. GENERAL CONTRACTOR
6. MECHANICAL/ELECTRICAL COORDINATOR
7. TEST TECHNICIAN
8. MECHANICAL CONTRACTOR
9. PLUMBING CONTRACTOR
10. FIRE PROTECTION CONTRACTOR
11. ELECTRICAL CONTRACTOR
12. CONTROLS CONTRACTOR
13. TESTING, ADJUSTING AND BALANCING CONTRACTOR
14. ALL SUBCONTRACTORS AND EQUIPMENT SUPPLIERS/MANUFACTURERS THAT ARE ASSOCIATED WITH THE ABOVE DISCIPLINES.

D. ABBREVIATIONS:

1. THE FOLLOWING ARE COMMON ABBREVIATIONS USED IN THE SPECIFICATIONS AND IN THE COMMISSIONING PROCESS. DEFINITIONS ARE FOUND IN SECTION 1.11.

A/E-	DESIGNER AND DESIGN ENGINEERS	EC-	ELECTRICAL CONTRACTOR
CA-	COMMISSIONING AUTHORITY	FM-	FACILITY MANAGER
CC	CONTROLS CONTRACTOR	FT-	FUNCTIONAL PERFORMANCE TEST
MC-	MECHANICAL CONTRACTOR	GC-	GENERAL CONTRACTOR (PRIME)
PC-	PREFUNCTIONAL CHECKLIST	SUBS-	SUBCONTRACTORS
CX-	COMMISSIONING	TAB-	TEST AND BALANCE CONTRACTOR
MEC	MECHANICAL/ELECTRICAL COORDINATOR	TT	TEST TECHNICIAN

1.3 COORDINATION

A. COMMISSIONING TEAM. THE MEMBERS OF THE COMMISSIONING TEAM CONSIST OF THE COMMISSIONING AUTHORITY (CA), FACILITY MANAGER (FM), THE DESIGNATED REPRESENTATIVE OF THE GENERAL CONTRACTOR (GC), THE DESIGNER AND DESIGN ENGINEERS (A/E), THE MECHANICAL CONTRACTOR (MC), THE ELECTRICAL CONTRACTOR (EC), THE TAB REPRESENTATIVE, THE CONTROLS CONTRACTOR (CC), MECHANICAL/ELECTRICAL COORDINATOR (MEC), TEST TECHNICIAN (TT) AND ANY OTHER INSTALLING SUBCONTRACTORS OR SUPPLIERS OF EQUIPMENT. THE OWNER'S BUILDING OR PLANT OPERATOR/ENGINEER IS ALSO A MEMBER OF THE COMMISSIONING TEAM.

B. MANAGEMENT: THE CA IS HIRED BY DCAM, DIRECTS AND COORDINATES ALL COMMISSIONING ACTIVITIES AND REPORTS TO THE OWNER. ALL PROJECT TEAM MEMBERS WORK TOGETHER TO FULFILL THEIR CONTRACTED RESPONSIBILITIES AND MEET THE OBJECTIVES OF THE CONTRACT DOCUMENTS.

C. SCHEDULING: THE CA WILL WORK WITH THE GENERAL CONTRACTOR ACCORDING TO ESTABLISHED PROTOCOLS TO SCHEDULE COMMISSIONING ACTIVITIES. THE CA WILL PROVIDE SUFFICIENT NOTICE TO THE GENERAL CONTRACTOR AND/OR MEC FOR SCHEDULING COMMISSIONING ACTIVITIES. THE GENERAL CONTRACTOR WILL INTEGRATE ALL COMMISSIONING ACTIVITIES INTO THE MASTER SCHEDULE. ALL PARTIES WILL ADDRESS SCHEDULING PROBLEMS AND MAKE NECESSARY NOTIFICATIONS IN A TIMELY MANNER IN ORDER TO EXPEDITE THE COMMISSIONING PROCESS.

1. THE CA WILL PROVIDE THE INITIAL SCHEDULE OF PRIMARY COMMISSIONING EVENTS AT THE COMMISSIONING SCOPING MEETING. AS CONSTRUCTION PROGRESSES MORE DETAILED SCHEDULES ARE DEVELOPED BY THE CA AND ARE INCORPORATED INTO THE PROJECT SCHEDULE BY THE GENERAL CONTRACTOR.

1.4 COMMISSIONING PROCESS

A. COMMISSIONING PROCESS. THE FOLLOWING NARRATIVE PROVIDES A BRIEF OVERVIEW OF THE TYPICAL COMMISSIONING TASKS DURING CONSTRUCTION AND THE GENERAL ORDER IN WHICH THEY OCCUR.

1. COMMISSIONING DURING CONSTRUCTION BEGINS WITH A SCOPING MEETING CONDUCTED BY THE CA WHEREIN THE COMMISSIONING PROCESS IS REVIEWED WITH THE COMMISSIONING TEAM MEMBERS.
2. ADDITIONAL MEETINGS SCHEDULED BY THE CA WILL BE REQUIRED THROUGHOUT CONSTRUCTION, TO PLAN, SCOPE, COORDINATE, AND SCHEDULE FUTURE ACTIVITIES AND RESOLVE PROBLEMS.
3. EQUIPMENT DOCUMENTATION IS SUBMITTED TO THE ENGINEER DURING NORMAL SUBMITTALS, INCLUDING DETAILED START-UP PROCEDURES. THE CA WILL REVIEW AND COMMENT ON APPLICABLE ITEMS.
4. THE SUBCONTRACTORS DEVELOP STARTUP PLANS AND STARTUP DOCUMENTATION FORMATS AND PROVIDE TO THE CA. THE CA USES THIS INFORMATION TO SUPPLEMENT PREFUNCTIONAL CHECKLISTS TO BE COMPLETED, DURING THE STARTUP PROCESS.
5. THE SUBCONTRACTORS EXECUTE AND DOCUMENT THE PREFUNCTIONAL CHECKLISTS AND PERFORM STARTUP AND INITIAL CHECKOUT. THE CA DOCUMENTS THAT THE CHECKLISTS AND STARTUP WERE COMPLETED ACCORDING TO THE APPROVED PLANS. THIS MAY INCLUDE THE CA WITNESSING START-UP AND PREFUNCTIONAL TESTS OF SELECTED EQUIPMENT.
6. THE CA DEVELOPS SPECIFIC EQUIPMENT AND SYSTEM FUNCTIONAL PERFORMANCE TEST PROCEDURES. THE SUBCONTRACTORS REVIEW THE PROCEDURES.
7. THE PROCEDURES ARE EXECUTED BY THE SUBCONTRACTORS, AND WITNESSED AND DOCUMENTED BY THE CA. THE OWNER'S FM IS ALSO INVITED TO WITNESS TESTING.
8. ITEMS OF NON-COMPLIANCE IN MATERIAL, INSTALLATION, OR SETUP ARE CORRECTED AT THE SUB'S EXPENSE AND THE SYSTEM IN QUESTION IS RETESTED.
9. THE CA REVIEWS THE O&M DOCUMENTATION FOR COMPLETENESS.
10. THE CA APPROVES THE TRAINING PLAN AND AUDITS TRAINING.
11. THE CA ASSEMBLES ALL PROJECT DOCUMENTATION INTO SYSTEMS MANUALS
12. DEFERRED TESTING IS CONDUCTED, AS SPECIFIED OR REQUIRED.

1.5 RELATED WORK

A. ALL OF THE FOLLOWING SECTIONS APPLY TO THE WORK OF THIS SECTION. THIS LIST DOES NOT LIMIT THE WORK THAT MAY BE REQUIRED BY THE GENERAL CONTRACTOR UNDER ADDITIONAL SPECIFICATION SECTION FOR THE COMPLETION OF THE COMMISSIONING PROCESS.

1. SECTION 017700 - CONTRACT CLOSEOUT
2. SECTION 013100 - PROJECT MANAGEMENT AND COORDINATION
3. SECTION 140001 - ELEVATORS
4. SECTION 210001 - FIRE PROTECTION
5. SECTION 220001 - PLUMBING
6. SECTION 230001 - HEATING, VENTILATING AND AIR CONDITIONING
7. SECTION 260001 - ELECTRICAL WORK

1.6 COMMISSIONING COMPLETION

A. PREREQUISITES TO FUNCTIONAL COMPLETION

1. ALL TAB WORK AND COMMISSIONING ACTIVITIES MUST BE COMPLETE PRIOR TO FUNCTIONAL COMPLETION, UNLESS APPROVED IN WRITING BY THE CA. EXCEPTIONS TO THIS ARE THE PLANNED CONTROL SYSTEM TRAINING PERFORMED AFTER OCCUPANCY AND ANY REQUIRED SEASONAL OR APPROVED DEFERRED TESTING. THIS REQUIREMENT COVERS ALL SYSTEMS, BUT IS NOT LIMITED TO:

a. COMPLETED AND SIGNED START-UP AND PREFUNCTIONAL CHECKLIST DOCUMENTATION
b. REQUESTED TREND LOG DATA
c. SUBMISSION OF FINAL APPROVED TAB REPORT
d. COMPLETION OF ALL FUNCTIONAL TESTING
e. REQUIRED TRAINING OF OWNER MAINTENANCE PERSONNEL
f. SUBMISSION OF THE APPROVED O&M MANUALS
g. ALL IDENTIFIED DEFICIENCIES HAVE BEEN CORRECTED OR ARE APPROVED BY THE DCAM PROJECT MANAGER TO BE EXCEPTED FROM THIS MILESTONE.

B. THE GENERAL CONTRACTOR WILL DETERMINE THE DATE OF FUNCTIONAL COMPLETION AFTER REVIEWING THE COMMISSIONING AGENT'S RECOMMENDATION FOR FUNCTIONAL COMPLETION.

C. COMMISSIONING ACTIVITIES ARE NON-COMPENSABLE AND CANNOT BE A CAUSE FOR DELAY CLAIMS.

1.7 SYSTEMS TO BE COMMISSIONED

A. THE FOLLOWING SYSTEMS WILL BE COMMISSIONED IN THIS PROJECT, BUT THIS LIST DOES NOT LIMIT THE TESTING THAT MAY BE REQUIRED TO ACHIEVE LEED CERTIFICATION OF THE PROJECT BY THE UNITED STATES GREEN BUILDING COUNCIL. TESTING REQUIREMENTS ARE PART OF THIS SECTION. EACH MEMBER OF THE COMMISSIONING TEAM SHALL REVIEW ALL TEST PROCEDURES IN THIS SECTION TO DETERMINE IF HIS/HER PRESENCE IS REQUIRED FOR EACH TEST (FOR EXAMPLE, CERTAIN TESTS OF MECHANICAL EQUIPMENT MAY REQUIRE THE SUPPORT OF ELECTRICAL PERSONNEL AND VICE VERSA)

((SAMPLE LIST – TO BE MODIFIED BY DESIGNER TO SUIT PROJECT CONDITIONS))

EQUIPMENT AND SYSTEM	FUNCTIONAL TEST REQUIREMENTS SPECIFIED IN:
PLUMBING SYSTEM	
RAIN WATER COLLECTION SYSTEM(S)	3.10
SUMP PUMP	3.11
PLUMBING WATER SYSTEM	3.12
HVAC SYSTEM	
HOT WATER HEATING SYSTEM (BOILERS, PUMPS, DISTRIBUTION	3.13
TERMINAL UNITS (FCU, FPT, VAV, CUH, UH)	3.14
PACKAGED DX SPLIT SYSTEM AIR CONDITIONING OR HEAT PUMP	3.15
EXHAUST FANS	3.16
BUILDING AUTOMATION SYSTEM (BAS)	3.17
TEST AND BALANCE WORK (TAB)	3.18
AIR HANDLING UNITS (RECIRCULATING AND 100% O.A.)	3.19
COLD WATER COOLING SYSTEM (CHILLERS, COOLING TOWERS, PUMPS, DISTRIBUTION)	TBD
ELECTRICAL SYSTEM	
EMERGENCY GENERATOR(S)	3.20
EMERGENCY LIGHTING	3.21
FIRE ALARM SYSTEM	3.22
SHORT CIRCUIT TRIP	3.23
LIGHTING CONTROL SYSTEM	3.24

EQUIPMENT AND SYSTEM	FUNCTIONAL TEST REQUIREMENTS SPECIFIED IN:
AUTOMATIC TRANSFER SWITCH(ES)	3.25
RENEWABLE ENERGY SYSTEMS	3.26
SECURITY SYSTEMS	TBD
UNINTERRUPTIBLE POWER SUPPLY SYSTEM	TBD
LIFE SAFETY SYSTEM	
FIRE ALARM SYSTEM	TBD
FIRE SUPPRESSION/PROTECTION SYSTEMS	TBD
EGRESS PRESSURIZATION SYSTEMS	TBD
OTHER	
KITCHEN EQUIPMENT	TBD
KITCHEN HOODS AND EXHAUST SYSTEMS	TBD
ELEVATORS	TBD
TELECOMMUNICATIONS SYSTEM	
VOICE/DATA HORIZONTAL CABLING	3.27
VOICE/DATA BACKBONE CABLING	3.28
VIDEO DISTRIBUTION SYSTEM	3.29
INTERCOM SYSTEMS	3.30

1.8 RESPONSIBILITIES

A. THE RESPONSIBILITIES OF ALL PARTIES IN THE COMMISSIONING PROCESS ARE PROVIDED IN THIS SECTION.

B. ALL PARTIES:

1. ATTEND COMMISSIONING SCOPING MEETING AND ADDITIONAL MEETINGS, AS NECESSARY.

C. DESIGNER (OF A/E):

1. CONSTRUCTION PHASE
   a. ATTEND THE COMMISSIONING SCOPING MEETING AND SELECTED COMMISSIONING TEAM MEETINGS.
   b. PERFORM NORMAL SUBMITTAL REVIEW, CONSTRUCTION OBSERVATION, AS-BUILT DRAWING PREPARATION, O&M MANUAL PREPARATION, ETC., AS CONTRACTED.
   c. PROVIDE ANY DESIGN NARRATIVE DOCUMENTATION REQUESTED BY THE CA.
   d. COORDINATE RESOLUTION OF SYSTEM DEFICIENCIES IDENTIFIED DURING COMMISSIONING, ACCORDING TO THE CONTRACT DOCUMENTS.
   e. PREPARE AND SUBMIT DESIGN INTENT DOCUMENTATION CLARIFICATIONS FOR INCLUSION IN THE O&M MANUALS. REVIEW AND APPROVE THE O&M MANUALS.
2. POST CONSTRUCTION PHASE
   a. COORDINATE RESOLUTION OF DESIGN NON-CONFORMANCE AND DESIGN DEFICIENCIES IDENTIFIED DURING WARRANTY-PERIOD COMMISSIONING.

D. DESIGN ENGINEER:

1. CONSTRUCTION PHASE

a. PERFORM NORMAL SUBMITTAL REVIEW, CONSTRUCTION OBSERVATION, AS-BUILT DRAWING PREPARATION, ETC., AS CONTRACTED. ONE SITE OBSERVATION SHOULD BE COMPLETED JUST PRIOR TO SYSTEM STARTUP.
b. PROVIDE ANY DESIGN NARRATIVE AND SEQUENCES DOCUMENTATION REQUESTED BY THE CA. THE DESIGNERS SHALL ASSIST (ALONG WITH THE CONTRACTORS) IN CLARIFYING THE OPERATION AND CONTROL OF COMMISSIONED EQUIPMENT IN AREAS WHERE THE SPECIFICATIONS, CONTROL DRAWINGS OR EQUIPMENT DOCUMENTATION ARE NOT SUFFICIENT FOR WRITING DETAILED TESTING PROCEDURES.
c. PARTICIPATE IN THE RESOLUTION OF SYSTEM DEFICIENCIES IDENTIFIED DURING COMMISSIONING, ACCORDING TO THE CONTRACT DOCUMENTS.

E. COMMISSIONING AUTHORITY (CA): THE CA IS NOT RESPONSIBLE FOR DESIGN CONCEPT, DESIGN CRITERIA, COMPLIANCE WITH CODES, DESIGN OR GENERAL CONSTRUCTION SCHEDULING, COST ESTIMATING, OR CONSTRUCTION MANAGEMENT. THE CA MAY ASSIST WITH PROBLEM-SOLVING, NON-CONFORMANCE OR THE RESOLUTION OF DEFICIENCIES, BUT THE ULTIMATE RESPONSIBILITY RESIDES WITH THE GENERAL CONTRACTOR AND THE A/E. THE PRIMARY ROLE OF THE CA IS TO OBSERVE AND DOCUMENT PERFORMANCE AND CONFIRM THAT SYSTEMS ARE FUNCTIONING IN ACCORDANCE WITH THE OWNER'S PROJECT REQUIREMENTS (OPR), DOCUMENTED DESIGN INTENT (BOD) AND THE CONTRACT DOCUMENTS. CONTRACTORS WILL PROVIDE ALL TOOLS AND EQUIPMENT TO START AND FUNCTIONALLY TEST BUILDING EQUIPMENT AND SYSTEMS.

1. CONSTRUCTION PHASE
a. COORDINATE AND DIRECT THE COMMISSIONING ACTIVITIES IN A LOGICAL, SEQUENTIAL AND EFFICIENT MANNER USING CONSISTENT PROTOCOLS AND FORMS, CENTRALIZED DOCUMENTATION, CLEAR AND REGULAR COMMUNICATIONS AND CONSULTATIONS WITH ALL NECESSARY PARTIES, FREQUENTLY UPDATED TIMELINES AND SCHEDULES AND TECHNICAL EXPERTISE.
b. SUBMIT COMMISSIONING SCHEDULE TO GC, MEC, TT, AND A/E TO ENSURE THAT COMMISSIONING ACTIVITIES ARE BEING SCHEDULED INTO THE MASTER SCHEDULE.
c. PLAN AND CONDUCT A COMMISSIONING SCOPING MEETING AND OTHER COMMISSIONING MEETINGS.
d. REQUEST AND REVIEW ADDITIONAL INFORMATION REQUIRED TO PERFORM COMMISSIONING TASKS, INCLUDING O&M MATERIALS, CONTRACTOR START-UP AND CHECKOUT PROCEDURES.
e. BEFORE STARTUP REVIEW THE CURRENT CONTROL SEQUENCES AND INTERLOCKS AND WORK WITH CONTRACTORS AND DESIGN ENGINEERS UNTIL SUFFICIENT CLARITY HAS BEEN OBTAINED, IN WRITING, TO BE ABLE TO WRITE DETAILED TESTING PROCEDURES.
f. REVIEW SYSTEMS BEING COMMISSIONED FOR COMPLIANCE WITH COMMISSIONING NEEDS, CONCURRENT WITH THE A/E REVIEWS.
g. PERFORM SITE VISITS, AS NECESSARY, TO OBSERVE COMPONENT AND SYSTEM INSTALLATIONS. ATTEND SELECTED PLANNING AND JOB-SITE MEETINGS TO OBTAIN INFORMATION ON CONSTRUCTION PROGRESS.
h. VERIFY SYSTEMS STARTUP BY REVIEWING START-UP REPORTS AND BY SELECTED SITE OBSERVATION.
i. REVIEW TAB EXECUTION PLAN.
j. VERIFY AIR AND WATER SYSTEMS BALANCING BY SPOT TESTING, BY REVIEWING COMPLETED REPORTS AND BY SELECTED SITE OBSERVATION.
k. WITH NECESSARY ASSISTANCE AND REVIEW FROM INSTALLING CONTRACTORS, WRITE THE FUNCTIONAL PERFORMANCE TEST PROCEDURES FOR EQUIPMENT AND SYSTEMS. THIS MAY INCLUDE ENERGY MANAGEMENT CONTROL SYSTEM TRENDING, STAND-ALONE DATA LOGGER MONITORING OR MANUAL FUNCTIONAL TESTING.
l. ANALYZE ANY FUNCTIONAL PERFORMANCE TREND LOGS AND MONITORING DATA TO VERIFY PERFORMANCE.
m. COORDINATE, WITNESS, AND APPROVE MANUAL FUNCTIONAL PERFORMANCE TESTS PERFORMED BY INSTALLING CONTRACTORS. COORDINATE RETESTING AS NECESSARY UNTIL SATISFACTORY PERFORMANCE IS ACHIEVED.

n. MAINTAIN A MASTER DEFICIENCY AND RESOLUTION LOG AND A SEPARATE TESTING RECORD. PROVIDE THE GC, MEC, TT, AND A/E WITH WRITTEN PROGRESS REPORTS AND TEST RESULTS WITH RECOMMENDED ACTIONS.
o. WITNESS PERFORMANCE TESTING OF ALL OTHER OWNER CONTRACTED TESTS OR TESTS BY MANUFACTURER'S PERSONNEL OVER WHICH THE CA MAY NOT HAVE DIRECT CONTROL (A SMOKE CONTROL SYSTEM, FOR EXAMPLE). DOCUMENT THESE TESTS AND INCLUDE RESULTS IN SYSTEMS MANUALS.
p. COMPILE AND MAINTAIN A COMMISSIONING RECORD.
q. REVIEW O&M MANUALS SUBMITTED BY CONTRACTORS.
r. PROVIDE A FINAL COMMISSIONING REPORT (AS DESCRIBED IN THIS SECTION).
s. DEVELOP A SYSTEMS MANUAL.
t. PREPARE A STANDARD TREND LOGGING PACKAGE OF PRIMARY PARAMETERS THAT WILL PROVIDE THE OPERATIONS STAFF CLEAR INDICATIONS OF SYSTEM FUNCTION IN ORDER TO IDENTIFY PROPER SYSTEM OPERATION AND TROUBLE SHOOT PROBLEMS. THE CA SHALL ALSO PROVIDE ANY NEEDED INFORMATION ON INTERPRETING THE TRENDS.

2. POST CONSTRUCTION PHASE
a. COORDINATE AND SUPERVISE REQUIRED SEASONAL OR DEFERRED TESTING AND DEFICIENCY CORRECTIONS.
b. RETURN TO THE SITE DURING THE OPPOSITE SEASON FROM WHEN FUNCTIONAL TESTING WAS PERFORMED (APPROXIMATELY 6 MONTHS INTO THE POST CONSTRUCTION PHASE) AND REVIEW WITH FACILITY STAFF THE CURRENT BUILDING OPERATION AND THE CONDITION OF OUTSTANDING ISSUES RELATED TO THE ORIGINAL AND SEASONAL COMMISSIONING.

F. GENERAL CONTRACTOR (GC), MECHANICAL/ELECTRICAL COORDINATOR (MEC), AND OR TEST TECHNICIAN (TT):

1. CONSTRUCTION PHASE
a. FACILITATE THE COORDINATION OF THE COMMISSIONING WORK BY THE CA. THE GC, TT, AND MEC WILL ENSURE THAT COMMISSIONING ACTIVITIES ARE BEING ENTERED INTO THE MASTER SCHEDULE.
b. ATTEND A COMMISSIONING SCOPING MEETING AND OTHER COMMISSIONING TEAM MEETINGS.
c. PERFORM THE NORMAL REVIEW OF CONTRACTOR SUBMITTALS AND COMPLETED COMMISSIONING TEST RESULTS.
d. WHEN NECESSARY, OBSERVE AND WITNESS PREFUNCTIONAL CHECKLISTS, STARTUP, AND FUNCTIONAL TESTING OF SELECTED EQUIPMENT.
e. REVIEW COMMISSIONING PROGRESS AND DEFICIENCY REPORTS.
f. COORDINATE THE RESOLUTION OF NON-COMPLIANCE AND DESIGN DEFICIENCIES IDENTIFIED IN ALL PHASES OF COMMISSIONING.
g. ARRANGE FOR FACILITY OPERATING AND MAINTENANCE PERSONNEL TO ATTEND VARIOUS FIELD COMMISSIONING ACTIVITIES AND FIELD TRAINING.
h. PREPARE AND SUBMIT AS-BUILT DOCUMENTATION FOR INCLUSION IN THE O&M MANUALS.
i. PROVIDE WRITTEN NOTICE FOR THE COMPLETION OF THE COMMISSIONING TESTING.

2. POST CONSTRUCTION PHASE
a. ASSIST THE CA AND USER AGENCY AS NECESSARY IN THE SEASONAL OR DEFERRED TESTING AND DEFICIENCY CORRECTIONS REQUIRED BY THE SPECIFICATIONS.
b. ENSURE THAT ANY SEASONAL OR DEFERRED TESTING AND ANY DEFICIENCY ISSUES ARE ADDRESSED.

G. MECHANICAL, CONTROLS, AND TAB CONTRACTORS: THE COMMISSIONING RESPONSIBILITIES APPLICABLE TO EACH OF THE MECHANICAL, CONTROLS, AND TAB CONTRACTORS UNDER 1.05 RELATED WORK A. ABOVE IS AS FOLLOWS (ALL REFERENCES APPLY TO COMMISSIONED EQUIPMENT ONLY):

1. CONSTRUCTION PHASES

a. ATTEND A COMMISSIONING SCOPING MEETING AND OTHER MEETINGS NECESSARY TO FACILITATE THE COMMISSIONING PROCESS.
b. SUBCONTRACTORS SHALL PROVIDE THE CA WITH NORMAL CUT SHEETS AND SHOP DRAWING SUBMITTALS OF COMMISSIONED EQUIPMENT.
c. PROVIDE ADDITIONAL REQUESTED DOCUMENTATION (PRIOR TO NORMAL O&M MANUAL SUBMITTALS) TO THE CA FOR DEVELOPMENT OF START-UP AND FUNCTIONAL TESTING PROCEDURES.
    1) TYPICALLY THIS DOCUMENTATION WILL CLEARLY IDENTIFY DETAILED MANUFACTURER INSTALLATION AND START-UP, OPERATING, TROUBLESHOOTING AND MAINTENANCE PROCEDURES. IT WILL ALSO INCLUDE FULL DETAILS OF ANY OWNER-CONTRACTED TESTS, FAN AND PUMP CURVES, FULL FACTORY TESTING REPORTS, IF ANY, AND FULL WARRANTY INFORMATION, INCLUDING ALL RESPONSIBILITIES OF THE OWNER TO KEEP THE WARRANTY IN FORCE. IN ADDITION, THE INSTALLATION, START-UP, AND CHECKOUT MATERIALS THAT ARE SHIPPED WITH THE EQUIPMENT AND THE FIELD CHECKOUT SHEET FORMS TO BE USED BY THE FACTORY OR FIELD TECHNICIANS SHALL BE SUBMITTED TO THE COMMISSIONING AGENT.
    2) THE COMMISSIONING AGENT MAY REQUEST FURTHER DOCUMENTATION NECESSARY FOR THE COMMISSIONING PROCESS.
    3) THIS DATA REQUEST MAY BE MADE PRIOR TO NORMAL SUBMITTALS.
d. PROVIDE A COPY OF THE O&M MANUALS AND SUBMITTALS OF COMMISSIONED EQUIPMENT, THROUGH NORMAL CHANNELS, TO THE CA AND A/E FOR REVIEW AND APPROVAL.
e. SUBCONTRACTORS SHALL ASSIST (ALONG WITH THE DESIGN ENGINEERS) IN CLARIFYING THE OPERATION AND CONTROL OF COMMISSIONED EQUIPMENT IN AREAS WHERE THE SPECIFICATIONS, CONTROL DRAWINGS OR EQUIPMENT DOCUMENTATION IS NOT SUFFICIENT FOR WRITING DETAILED TESTING PROCEDURES.
f. PROVIDE ASSISTANCE TO THE CA IN PREPARING THE SPECIFIC FUNCTIONAL PERFORMANCE TEST PROCEDURES. SUBS SHALL REVIEW TEST PROCEDURES TO ENSURE FEASIBILITY, SAFETY, AND EQUIPMENT PROTECTION AND PROVIDE NECESSARY WRITTEN ALARM LIMITS TO BE USED DURING THE TESTS.
g. DEVELOP A FULL START-UP AND INITIAL CHECKOUT PLAN USING MANUFACTURER'S START-UP PROCEDURES AND THE PREFUNCTIONAL CHECKLISTS FROM THE CA FOR ALL COMMISSIONED EQUIPMENT. SUBMIT TO CA AND A/E FOR REVIEW AND APPROVAL PRIOR TO STARTUP.
h. DURING THE STARTUP AND INITIAL CHECKOUT PROCESS, EXECUTE THE MECHANICAL-RELATED PORTIONS OF THE PREFUNCTIONAL CHECKLISTS FOR ALL COMMISSIONED EQUIPMENT.
i. PERFORM AND CLEARLY DOCUMENT ALL COMPLETED STARTUP AND SYSTEM OPERATIONAL CHECKOUT PROCEDURES, PROVIDING A COPY TO THE CA AND A/E.
j. ADDRESS CURRENT A/E PUNCH LIST ITEMS BEFORE FUNCTIONAL TESTING. AIR AND WATER TAB SHALL BE COMPLETED WITH DISCREPANCIES AND PROBLEMS REMEDIED BEFORE FUNCTIONAL TESTING OF THE RESPECTIVE AIR- OR WATER-RELATED SYSTEMS.
k. PROVIDE SKILLED TECHNICIANS TO EXECUTE STARTING OF EQUIPMENT AND TO EXECUTE THE FUNCTIONAL PERFORMANCE TESTS. ENSURE THAT THEY ARE AVAILABLE AND PRESENT DURING THE AGREED UPON SCHEDULES AND FOR SUFFICIENT DURATION TO COMPLETE THE NECESSARY TESTS, ADJUSTMENTS AND PROBLEM SOLVING.
l. PROVIDE SKILLED TECHNICIANS TO PERFORM FUNCTIONAL PERFORMANCE TESTING UNDER THE DIRECTION OF THE CA FOR SPECIFIED EQUIPMENT. ASSIST THE CA IN INTERPRETING THE MONITORING DATA, AS NECESSARY.
m. CORRECT DEFICIENCIES (DIFFERENCES BETWEEN SPECIFIED AND OBSERVED PERFORMANCE) AS INTERPRETED BY THE CA AND A/E AND RETEST THE EQUIPMENT.
n. PREPARE O&M MANUALS ACCORDING TO THE CONTRACT DOCUMENTS, INCLUDING CLARIFYING AND UPDATING THE ORIGINAL SEQUENCES OF OPERATION TO AS-BUILT CONDITIONS.
o. DURING CONSTRUCTION, MAINTAIN AS-BUILT DRAWINGS.

p. PROVIDE TRAINING OF THE OWNER'S OPERATING STAFF USING EXPERT QUALIFIED PERSONNEL, AS SPECIFIED. MAINTAIN SIGN-IN SHEETS AND PROVIDE COPIES TO CA.
q. COORDINATE WITH EQUIPMENT MANUFACTURERS TO DETERMINE SPECIFIC REQUIREMENTS TO MAINTAIN THE VALIDITY OF THE WARRANTY.

2. POST CONSTRUCTION PHASE
   a. EXECUTE SEASONAL OR DEFERRED FUNCTIONAL PERFORMANCE TESTING, WITNESSED BY THE CA, ACCORDING TO THE SPECIFICATIONS.
   b. CORRECT DEFICIENCIES AND MAKE NECESSARY ADJUSTMENTS TO O&M MANUALS AND AS-BUILT DRAWINGS FOR APPLICABLE ISSUES IDENTIFIED IN ANY SEASONAL TESTING.

H. MECHANICAL CONTRACTOR: THE RESPONSIBILITIES OF THE HVAC MECHANICAL CONTRACTOR, DURING CONSTRUCTION PHASES IN ADDITION TO THOSE LISTED IN (A) ARE:

1. PROVIDE STARTUP FOR ALL HVAC EQUIPMENT, EXCEPT FOR THE BUILDING AUTOMATION CONTROL SYSTEM.
2. ASSIST AND COOPERATE WITH THE TAB CONTRACTOR AND CA BY:
   a. PUTTING ALL HVAC EQUIPMENT AND SYSTEMS INTO OPERATION AND CONTINUING THE OPERATION DURING EACH WORKING DAY OF TAB AND COMMISSIONING, AS REQUIRED.
   b. INCLUDING COST OF SHEAVES AND BELTS THAT MAY BE REQUIRED BY TAB.
   c. PROVIDING TEST HOLES IN DUCTS AND PLENUMS WHERE DIRECTED BY TAB TO ALLOW AIR MEASUREMENTS AND AIR BALANCING. PROVIDING AN APPROVED PLUG.
   d. PROVIDING TEMPERATURE AND PRESSURE TAPS ACCORDING TO THE CONSTRUCTION DOCUMENTS FOR TAB AND COMMISSIONING TESTING.
3. INSTALL A P/T PLUG AT EACH WATER SENSOR, WHICH IS AN INPUT POINT TO THE CONTROL SYSTEM.
4. LIST AND CLEARLY IDENTIFY ON THE AS-BUILT DRAWINGS THE LOCATIONS OF ALL AIRFLOW STATIONS.
5. PREPARE A PRELIMINARY SCHEDULE FOR DIVISION 15501 PIPE AND DUCT SYSTEM TESTING, FLUSHING, AND CLEANING, EQUIPMENT START-UP AND TAB START AND COMPLETION FOR USE BY THE CA. UPDATE THE SCHEDULE AS APPROPRIATE.
6. NOTIFY THE CA 48 HOURS PRIOR TO PIPE AND DUCT SYSTEM TESTING, FLUSHING, CLEANING, STARTUP OF EACH PIECE OF EQUIPMENT AND TAB WILL OCCUR. BE RESPONSIBLE TO NOTIFY THE GENERAL CONTRACTOR AND CA AHEAD OF TIME, WHEN COMMISSIONING ACTIVITIES NOT YET PERFORMED OR NOT YET SCHEDULED WILL DELAY CONSTRUCTION. BE PROACTIVE IN SEEING THAT COMMISSIONING PROCESSES ARE EXECUTED AND THAT THE CA HAS THE SCHEDULING INFORMATION NEEDED TO EFFICIENTLY EXECUTE THE COMMISSIONING PROCESS.

I. CONTROLS CONTRACTOR: THE COMMISSIONING RESPONSIBILITIES OF THE CONTROLS CONTRACTOR, DURING CONSTRUCTION PHASES IN ADDITION TO THOSE LISTED IN (A) ARE:

1. SEQUENCES OF OPERATION SUBMITTALS:
   a. THE CONTROLS CONTRACTOR'S SUBMITTALS OF CONTROL DRAWINGS SHALL INCLUDE COMPLETE DETAILED SEQUENCES OF OPERATION FOR EACH PIECE OF EQUIPMENT, REGARDLESS OF THE COMPLETENESS AND CLARITY OF THE SEQUENCES IN THE SPECIFICATIONS. THEY SHALL INCLUDE:
      1) AN OVERVIEW NARRATIVE OF THE SYSTEM (1 OR 2 PARAGRAPHS) GENERALLY DESCRIBING ITS PURPOSE, COMPONENTS, AND FUNCTION.
      2) ALL INTERACTIONS AND INTERLOCKS WITH OTHER SYSTEMS.
      3) DETAILED DELINEATION OF CONTROL BETWEEN ANY PACKAGED CONTROLS AND THE BUILDING AUTOMATION SYSTEM, LISTING WHAT POINTS THE BAS MONITORS ONLY AND WHAT BAS POINTS ARE CONTROL POINTS AND ARE ADJUSTABLE.
      4) WRITTEN SEQUENCES OF CONTROL FOR PACKAGED CONTROLLED EQUIPMENT. (EQUIPMENT MANUFACTURERS' STOCK SEQUENCES MAY BE INCLUDED, BUT WILL GENERALLY REQUIRE ADDITIONAL NARRATIVE).
      5) START-UP SEQUENCES.

6) WARM-UP MODE SEQUENCES.
7) NORMAL OPERATING MODE SEQUENCES.
8) UNOCCUPIED MODE SEQUENCES.
9) SHUTDOWN SEQUENCES.
10) CAPACITY CONTROL SEQUENCES AND EQUIPMENT STAGING.
11) TEMPERATURE AND PRESSURE CONTROL: SETBACKS, SETUPS, RESETS, ETC.
12) DETAILED SEQUENCES FOR ALL CONTROL STRATEGIES, E.G., ECONOMIZER CONTROL, OPTIMUM START/STOP, STAGING, OPTIMIZATION, DEMAND LIMITING, ETC.
13) EFFECTS OF POWER OR EQUIPMENT FAILURE WITH ALL STANDBY COMPONENT FUNCTIONS.
14) SEQUENCES FOR ALL ALARMS AND EMERGENCY SHUT DOWNS.
15) SEASONAL OPERATIONAL DIFFERENCES AND RECOMMENDATIONS.
16) INITIAL AND RECOMMENDED VALUES FOR ALL ADJUSTABLE SETTINGS, SET POINTS AND PARAMETERS THAT ARE TYPICALLY SET OR ADJUSTED BY OPERATING STAFF; AND ANY OTHER CONTROL SETTINGS OR FIXED VALUES, DELAYS, ETC. THAT WILL BE USEFUL DURING TESTING AND OPERATING THE EQUIPMENT.
17) SCHEDULES, IF KNOWN.
18) TO FACILITATE REFERENCING IN TESTING PROCEDURES, ALL SEQUENCES SHALL BE WRITTEN IN SMALL STATEMENTS, EACH WITH A NUMBER FOR REFERENCE. FOR A GIVEN SYSTEM, NUMBERS WILL NOT REPEAT FOR DIFFERENT SEQUENCE SECTIONS, UNLESS THE SECTIONS ARE NUMBERED.

2. CONTROL DRAWINGS SUBMITTAL:
   a. THE CONTROL DRAWINGS SHALL HAVE A KEY TO ALL ABBREVIATIONS.
   b. THE CONTROL DRAWINGS SHALL CONTAIN GRAPHIC SCHEMATIC DEPICTIONS OF THE SYSTEMS AND EACH COMPONENT.
   c. THE SCHEMATICS WILL INCLUDE THE SYSTEM AND COMPONENT LAYOUT OF ANY EQUIPMENT THAT THE CONTROL SYSTEM MONITORS, ENABLES, OR CONTROLS, EVEN IF THE EQUIPMENT IS PRIMARILY CONTROLLED BY PACKAGED OR INTEGRAL CONTROLS.
   d. PROVIDE A FULL POINTS LIST WITH AT LEAST THE FOLLOWING INCLUDED FOR EACH POINT:
      1) CONTROLLED SYSTEM
      2) POINT ABBREVIATION
      3) POINT DESCRIPTION
      4) DISPLAY UNIT
      5) CONTROL POINT OR SET POINT (YES / NO)
      6) MONITORING POINT (YES / NO)
      7) INTERMEDIATE POINT (YES / NO)
      8) CALCULATED POINT (YES / NO)
   e. KEY:
   f. POINT DESCRIPTION: DB TEMP, AIRFLOW, ETC.
   g. CONTROL OR SET POINT: POINT THAT CONTROLS EQUIPMENT AND CAN HAVE ITS SET POINT CHANGED (OSA, SAT, ETC.)
   h. INTERMEDIATE POINT: POINT WHOSE VALUE IS USED TO MAKE A CALCULATION WHICH THEN CONTROLS EQUIPMENT (SPACE TEMPERATURES THAT ARE AVERAGED TO A VIRTUAL POINT TO CONTROL RESET).
   i. MONITORING POINT: POINT THAT DOES NOT CONTROL OR CONTRIBUTE TO THE CONTROL OF EQUIPMENT, BUT IS USED FOR OPERATION, MAINTENANCE, OR PERFORMANCE VERIFICATION.
   j. CALCULATED POINT: “VIRTUAL” POINT GENERATED FROM CALCULATIONS OF OTHER POINT VALUES.
3. THE CONTROLS CONTRACTOR SHALL KEEP THE CA AND A/E INFORMED OF ALL CHANGES TO THIS LIST DURING PROGRAMMING AND SETUP.
4. AN UPDATED AS-BUILT VERSION OF THE CONTROL DRAWINGS AND SEQUENCES OF OPERATION SHALL BE INCLUDED IN THE FINAL CONTROLS O&M MANUAL SUBMITTAL.
5. ASSIST AND COOPERATE WITH THE TAB CONTRACTOR IN THE FOLLOWING MANNER:
   a. MEET WITH THE TAB CONTRACTOR PRIOR TO BEGINNING TAB AND REVIEW THE TAB PLAN TO DETERMINE THE CAPABILITIES OF THE CONTROL SYSTEM TOWARD

COMPLETING TAB. PROVIDE THE TAB ANY NEEDED UNIQUE INSTRUMENTS FOR SETTING TERMINAL UNIT BOXES AND INSTRUCT TAB IN THEIR USE (HANDHELD CONTROL SYSTEM INTERFACE FOR USE AROUND THE BUILDING DURING TAB, ETC.).

b. FOR A GIVEN AREA, HAVE ALL REQUIRED PREFUNCTIONAL CHECKLISTS, CALIBRATIONS, STARTUP AND SELECTED FUNCTIONAL TESTS OF THE SYSTEM COMPLETED AND APPROVED BY THE CA PRIOR TO TAB.

c. PROVIDE A QUALIFIED TECHNICIAN TO OPERATE THE CONTROLS TO ASSIST THE TAB CONTRACTOR IN PERFORMING TAB, OR PROVIDE SUFFICIENT TRAINING FOR TAB TO OPERATE THE SYSTEM WITHOUT ASSISTANCE.

6. ASSIST AND COOPERATE WITH THE CA IN THE FOLLOWING MANNER:
   a. USING A SKILLED TECHNICIAN WHO IS FAMILIAR WITH THIS BUILDING, EXECUTE THE FUNCTIONAL TESTING OF THE CONTROLS SYSTEM AS SPECIFIED FOR THE CONTROLS CONTRACTOR. ASSIST IN THE FUNCTIONAL TESTING OF ALL EQUIPMENT SPECIFIED. PROVIDE TWO-WAY RADIOS DURING THE TESTING.
   b. EXECUTE ALL CONTROL SYSTEM TREND LOGS SPECIFIED.
7. THE CONTROLS CONTRACTOR SHALL PREPARE A WRITTEN PLAN INDICATING IN A STEP-BY-STEP MANNER, THE PROCEDURES THAT WILL BE FOLLOWED TO TEST, CHECKOUT AND ADJUST THE CONTROL SYSTEM PRIOR TO FUNCTIONAL PERFORMANCE TESTING. AT MINIMUM, THE PLAN SHALL INCLUDE FOR EACH TYPE OF EQUIPMENT CONTROLLED BY THE AUTOMATIC CONTROLS:
   a. SYSTEM NAME.
   b. LIST OF DEVICES.
   c. STEP-BY-STEP PROCEDURES FOR TESTING EACH CONTROLLER AFTER INSTALLATION, INCLUDING:
      1) PROCESS OF VERIFYING PROPER HARDWARE AND WIRING INSTALLATION.
      2) PROCESS OF DOWNLOADING PROGRAMS TO LOCAL CONTROLLERS AND VERIFYING THAT THEY ARE ADDRESSED CORRECTLY.
      3) PROCESS OF PERFORMING OPERATIONAL CHECKS OF EACH CONTROLLED COMPONENT.
      4) PLAN AND PROCESS FOR CALIBRATING VALVE AND DAMPER ACTUATORS AND ALL SENSORS.
      5) A DESCRIPTION OF THE EXPECTED FIELD ADJUSTMENTS FOR TRANSMITTERS, CONTROLLERS AND CONTROL ACTUATORS SHOULD CONTROL RESPONSES FALL OUTSIDE OF EXPECTED VALUES.
   d. A COPY OF THE LOG AND FIELD CHECKOUT SHEETS THAT WILL DOCUMENT THE PROCESS. THIS LOG MUST INCLUDE A PLACE FOR INITIAL AND FINAL READ VALUES DURING CALIBRATION OF EACH POINT AND CLEARLY INDICATE WHEN A SENSOR OR CONTROLLER HAS “PASSED” AND IS OPERATING WITHIN THE CONTRACT PARAMETERS.
   e. A DESCRIPTION OF THE INSTRUMENTATION REQUIRED FOR TESTING.
   f. INDICATE WHAT TESTS ON WHAT SYSTEMS SHOULD BE COMPLETED PRIOR TO TAB USING THE CONTROL SYSTEM FOR TAB WORK. COORDINATE WITH THE CA AND TAB CONTRACTOR FOR THIS DETERMINATION.
8. PROVIDE A SIGNED AND DATED CERTIFICATION TO THE CA AND A/E UPON COMPLETION OF THE CHECKOUT OF EACH CONTROLLED DEVICE, EQUIPMENT AND SYSTEM PRIOR TO FUNCTIONAL TESTING FOR EACH PIECE OF EQUIPMENT OR SYSTEM, THAT ALL SYSTEM PROGRAMMING IS COMPLETE AS TO ALL RESPECTS OF THE CONTRACT DOCUMENTS, EXCEPT FUNCTIONAL TESTING REQUIREMENTS.
9. BEYOND THE CONTROL POINTS NECESSARY TO EXECUTE ALL DOCUMENTED CONTROL SEQUENCES, PROVIDE MONITORING, CONTROL AND VIRTUAL POINTS AS REQUESTED BY THE CA TO DEMONSTRATE SYSTEM OPERATION.
10. LIST AND CLEARLY IDENTIFY ON THE AS-BUILT DUCT AND PIPING DRAWINGS THE LOCATIONS OF ALL STATIC AND DIFFERENTIAL PRESSURE SENSORS (AIR, WATER AND BUILDING PRESSURE).

J. TAB CONTRACTOR: THE DUTIES OF THE TAB CONTRACTOR, IN ADDITION TO THOSE LISTED:

1. SIX WEEKS PRIOR TO STARTING TAB, SUBMIT TO THE CA AND A/E THE QUALIFICATIONS OF THE SITE TECHNICIAN FOR THE PROJECT, INCLUDING THE NAME OF THE CONTRACTORS AND FACILITY MANAGERS OF RECENT PROJECTS THE TECHNICIAN ON WHICH WAS LEAD.

2. SUBMIT THE OUTLINE OF THE TAB PLAN AND APPROACH FOR EACH SYSTEM AND COMPONENT TO THE CA, A/E, AND THE CONTROLS CONTRACTOR SIX WEEKS PRIOR TO STARTING THE TAB. THIS PLAN WILL BE DEVELOPED AFTER THE TAB HAS SOME FAMILIARITY WITH THE CONTROL SYSTEM.
3. THE SUBMITTED PLAN WILL INCLUDE:
   a. CERTIFICATION THAT THE TAB CONTRACTOR HAS REVIEWED THE CONSTRUCTION DOCUMENTS AND THE SYSTEMS WITH THE DESIGN ENGINEERS AND CONTRACTORS TO SUFFICIENTLY UNDERSTAND THE DESIGN INTENT FOR EACH SYSTEM.
   b. AN EXPLANATION OF THE INTENDED USE OF THE BUILDING CONTROL SYSTEM. THE CONTROLS CONTRACTOR WILL COMMENT ON FEASIBILITY OF THE PLAN.
   c. ALL FIELD CHECKOUT SHEETS AND LOGS TO BE USED THAT LIST EACH PIECE OF EQUIPMENT TO BE TESTED, ADJUSTED AND BALANCED WITH THE DATA CELLS TO BE GATHERED FOR EACH.
   d. DISCUSSION OF WHAT NOTATIONS AND MARKINGS WILL BE MADE ON THE DUCT AND PIPING DRAWINGS DURING THE PROCESS.
   e. FINAL TEST REPORT FORMS TO BE USED.
   f. DETAILED STEP-BY-STEP PROCEDURES FOR TAB WORK FOR EACH SYSTEM AND ISSUE: TERMINAL FLOW CALIBRATION (FOR EACH TERMINAL TYPE), DIFFUSER PROPORTIONING, BRANCH / SUBMAIN PROPORTIONING, TOTAL FLOW CALCULATIONS, RECHECKING, DIVERSITY ISSUES, EXPECTED PROBLEMS AND SOLUTIONS, ETC. CRITERIA FOR USING AIR FLOW STRAIGHTENERS OR RELOCATING FLOW STATIONS AND SENSORS WILL BE DISCUSSED. PROVIDE THE ANALOGOUS EXPLANATIONS FOR THE WATERSIDE.
   g. LIST OF ALL AIRFLOW, WATER FLOW, SOUND LEVEL, SYSTEM CAPACITY AND EFFICIENCY MEASUREMENTS TO BE PERFORMED AND A DESCRIPTION OF SPECIFIC TEST PROCEDURES, PARAMETERS, FORMULAS TO BE USED.
   h. DETAILS OF HOW TOTAL FLOW WILL BE DETERMINED (AIR: SUM OF TERMINAL FLOWS VIA BAS CALIBRATED READINGS OR VIA HOOD READINGS OF ALL TERMINALS, SUPPLY (SA) AND RETURN AIR (RA) PITOT TRAVERSE, SA OR RA FLOW STATIONS. WATER: PUMP CURVES, CIRCUIT SETTER, FLOW STATION, ULTRASONIC, ETC.).
   i. THE IDENTIFICATION AND TYPES OF MEASUREMENT INSTRUMENTS TO BE USED AND THEIR MOST RECENT CALIBRATION DATE.
   j. SPECIFIC PROCEDURES THAT WILL ENSURE THAT BOTH AIR AND WATER SIDE ARE OPERATING AT THE LOWEST POSSIBLE PRESSURES AND PROVIDE METHODS TO VERIFY THIS.
   k. CONFIRMATION THAT TAB UNDERSTANDS THE OUTSIDE AIR VENTILATION CRITERIA UNDER ALL CONDITIONS.
   l. DETAILS OF WHETHER AND HOW MINIMUM OUTSIDE AIR CFM WILL BE VERIFIED AND SET, AND FOR WHAT LEVEL (TOTAL BUILDING, ZONE, ETC.).
   m. DETAILS OF HOW BUILDING STATIC AND EXHAUST FAN / RELIEF DAMPER CAPACITY WILL BE CHECKED.
   n. PROPOSED SELECTION POINTS FOR SOUND MEASUREMENTS AND SOUND MEASUREMENT METHODS.
   o. DETAILS OF METHODS FOR MAKING ANY SPECIFIED COIL OR OTHER SYSTEM PLANT CAPACITY MEASUREMENTS.
   p. DETAILS OF ANY TAB WORK TO BE DONE IN PHASES (BY FLOOR, ETC.), OR OF AREAS TO BE BUILT OUT LATER.
   q. DETAILS REGARDING SPECIFIED DEFERRED OR SEASONAL TAB WORK.
   r. DETAILS OF ANY SPECIFIED FALSE LOADING OF SYSTEMS TO COMPLETE TAB WORK.
   s. DETAILS OF ALL EXHAUST FAN BALANCING AND CAPACITY VERIFICATIONS, INCLUDING ANY REQUIRED ROOM PRESSURE DIFFERENTIALS.
   t. DETAILS OF ANY REQUIRED INTERSTITIAL CAVITY DIFFERENTIAL PRESSURE MEASUREMENTS AND CALCULATIONS.
   u. PLAN FOR HAND-WRITTEN FIELD TECHNICIAN LOGS OF DISCREPANCIES, DEFICIENT OR UNCOMPLETED WORK BY OTHERS, CONTRACT INTERPRETATION REQUESTS AND LISTS OF COMPLETED TESTS (SCOPE AND FREQUENCY).
   v. PLAN FOR FORMAL PROGRESS REPORTS (SCOPE AND FREQUENCY).
   w. PLAN FOR FORMAL DEFICIENCY REPORTS (SCOPE, FREQUENCY AND DISTRIBUTION).

4. A RUNNING LOG OF EVENTS AND ISSUES SHALL BE KEPT BY THE TAB FIELD TECHNICIANS. SUBMIT HAND-WRITTEN REPORTS OF DISCREPANCIES, DEFICIENT OR UNCOMPLETED WORK BY OTHERS, CONTRACT INTERPRETATION REQUESTS AND LISTS OF COMPLETED TESTS TO THE CA AND GENERAL CONTRACTOR AT LEAST TWICE A WEEK.
5. COMMUNICATE IN WRITING TO THE CONTROLS CONTRACTOR ALL SET POINT AND PARAMETER CHANGES MADE OR PROBLEMS AND DISCREPANCIES IDENTIFIED DURING TAB WHICH AFFECT THE CONTROL SYSTEM SETUP AND OPERATION.
6. PROVIDE A DRAFT TAB REPORT WITHIN TWO WEEKS OF COMPLETION. A COPY WILL BE PROVIDED TO THE CA AND A/E. THE REPORT WILL CONTAIN A FULL EXPLANATION OF THE METHODOLOGY, ASSUMPTIONS AND THE RESULTS IN A CLEAR FORMAT WITH DESIGNATIONS OF ALL UNCOMMON ABBREVIATIONS AND COLUMN HEADINGS. THE REPORT SHOULD FOLLOW THE LATEST AND MOST RIGOROUS REPORTING RECOMMENDATIONS BY AABC, NEBB OR ASHRAE STANDARD 111.
7. PROVIDE THE CA AND A/E WITH ANY REQUESTED DATA, GATHERED, BUT NOT SHOWN ON THE DRAFT REPORTS.
8. PROVIDE A FINAL TAB REPORT FOR THE CA AND A/E WITH DETAILS, AS IN THE DRAFT.
9. CONDUCT FUNCTIONAL PERFORMANCE TESTS AND CHECKS ON THE ORIGINAL TAB AS SPECIFIED.

K. ELECTRICAL CONTRACTORS: THE COMMISSIONING RESPONSIBILITIES APPLICABLE TO THE ELECTRICAL CONTRACTOR ARE AS FOLLOWS (ALL REFERENCES APPLY TO COMMISSIONED EQUIPMENT ONLY):

1. CONSTRUCTION PHASES
   a. INCLUDE THE COST OF COMMISSIONING IN THE CONTRACT PRICE, IF NOT YET LET.
   b. IN EACH PURCHASE ORDER OR SUBCONTRACT WRITTEN, INCLUDE REQUIREMENTS FOR SUBMITTAL DATA, O&M DATA AND TRAINING.
   c. ATTEND A COMMISSIONING SCOPING MEETING AND OTHER NECESSARY MEETINGS SCHEDULED BY THE CA TO FACILITATE THE COMMISSIONING PROCESS.
   d. CONTRACTORS SHALL PROVIDE NORMAL CUT SHEETS AND SHOP DRAWING SUBMITTALS TO THE CA OF COMMISSIONED EQUIPMENT.
   e. PROVIDE ADDITIONAL REQUESTED DOCUMENTATION, PRIOR TO NORMAL O&M MANUAL SUBMITTALS, TO THE CA FOR DEVELOPMENT OF START-UP AND FUNCTIONAL TESTING PROCEDURES.
      1) TYPICALLY THIS WILL INCLUDE DETAILED MANUFACTURER INSTALLATION AND START-UP, OPERATING, TROUBLESHOOTING AND MAINTENANCE PROCEDURES, FULL DETAILS OF ANY OWNER-CONTRACTED TESTS, FAN AND PUMP CURVES, FULL FACTORY TESTING REPORTS, IF ANY, AND FULL WARRANTY INFORMATION, INCLUDING ALL RESPONSIBILITIES OF THE OWNER TO KEEP THE WARRANTY IN FORCE CLEARLY IDENTIFIED. IN ADDITION, THE INSTALLATION AND CHECKOUT MATERIALS THAT ARE ACTUALLY SHIPPED INSIDE THE EQUIPMENT AND THE ACTUAL FIELD CHECKOUT SHEET FORMS TO BE USED BY THE FACTORY OR FIELD TECHNICIANS SHALL BE SUBMITTED TO THE COMMISSIONING AGENT.
      2) THE COMMISSIONING AGENT MAY REQUEST FURTHER DOCUMENTATION NECESSARY FOR THE COMMISSIONING PROCESS.
      3) THIS DATA REQUEST MAY BE MADE PRIOR TO NORMAL SUBMITTALS.
   f. PROVIDE A COPY OF THE O&M MANUALS SUBMITTALS OF COMMISSIONED EQUIPMENT, THROUGH NORMAL CHANNELS, TO THE CA FOR REVIEW AND APPROVAL.
   g. SUBCONTRACTORS SHALL ASSIST (ALONG WITH THE DESIGN ENGINEERS) IN CLARIFYING THE OPERATION AND CONTROL OF COMMISSIONED EQUIPMENT IN AREAS WHERE THE SPECIFICATIONS, CONTROL DRAWINGS OR EQUIPMENT DOCUMENTATION IS NOT SUFFICIENT FOR WRITING DETAILED TESTING PROCEDURES.
   h. PROVIDE ASSISTANCE TO THE CA IN PREPARATION OF THE SPECIFIC FUNCTIONAL PERFORMANCE TEST PROCEDURES. SUBS SHALL REVIEW TEST PROCEDURES TO ENSURE FEASIBILITY, SAFETY AND EQUIPMENT PROTECTION

AND PROVIDE NECESSARY WRITTEN ALARM LIMITS TO BE USED DURING THE TESTS.

i. DEVELOP A FULL START-UP AND INITIAL CHECKOUT PLAN USING MANUFACTURER'S START-UP PROCEDURES AND THE PREFUNCTIONAL CHECKLISTS FROM THE CA. SUBMIT MANUFACTURER'S DETAILED START-UP PROCEDURES AND THE FULL START-UP PLAN AND PROCEDURES AND OTHER REQUESTED EQUIPMENT DOCUMENTATION TO CA FOR REVIEW.

j. DURING THE STARTUP AND INITIAL CHECKOUT PROCESS, EXECUTE AND DOCUMENT THE ELECTRICAL-RELATED PORTIONS OF THE PREFUNCTIONAL CHECKLISTS PROVIDED BY THE CA FOR ALL COMMISSIONED EQUIPMENT.

k. PERFORM AND CLEARLY DOCUMENT ALL COMPLETED STARTUP AND SYSTEM OPERATIONAL CHECKOUT PROCEDURES, PROVIDING A COPY TO THE CA AND A/E.

l. ADDRESS CURRENT A/E PUNCH LIST ITEMS BEFORE FUNCTIONAL TESTING. AIR AND WATER TAB SHALL BE COMPLETED WITH DISCREPANCIES AND PROBLEMS REMEDIED BEFORE FUNCTIONAL TESTING OF THE RESPECTIVE AIR- OR WATER-RELATED SYSTEMS.

m. PROVIDE SKILLED TECHNICIANS TO EXECUTE STARTING OF EQUIPMENT AND TO EXECUTE THE FUNCTIONAL PERFORMANCE TESTS. ENSURE THAT THEY ARE AVAILABLE AND PRESENT DURING THE AGREED UPON SCHEDULES AND FOR SUFFICIENT DURATION TO COMPLETE THE NECESSARY TESTS, ADJUSTMENTS AND PROBLEM-SOLVING.

n. PERFORM FUNCTIONAL PERFORMANCE TESTING UNDER THE DIRECTION OF THE CA FOR SPECIFIED EQUIPMENT. ASSIST THE CA IN INTERPRETING THE MONITORING DATA, AS NECESSARY.

o. CORRECT DEFICIENCIES (DIFFERENCES BETWEEN SPECIFIED AND OBSERVED PERFORMANCE) AS INTERPRETED BY THE CA, AND A/E AND RETEST THE EQUIPMENT.

p. PREPARE O&M MANUALS ACCORDING TO THE CONTRACT DOCUMENTS, INCLUDING CLARIFYING AND UPDATING THE ORIGINAL SEQUENCES OF OPERATION TO AS-BUILT CONDITIONS.

q. DURING CONSTRUCTION, MAINTAIN AS-BUILT DRAWINGS AND PREPARE FINAL AS-BUILT DRAWINGS AT PROJECT COMPLETION.

r. PROVIDE TRAINING OF THE OWNER'S OPERATING PERSONNEL AS SPECIFIED.

s. COORDINATE WITH EQUIPMENT MANUFACTURERS TO DETERMINE SPECIFIC REQUIREMENTS TO MAINTAIN THE VALIDITY OF THE WARRANTY.

2. POST CONSTRUCTION PHASE

a. EXECUTE SEASONAL OR DEFERRED FUNCTIONAL PERFORMANCE TESTING, WITNESSED BY THE CA, ACCORDING TO THE SPECIFICATIONS.

b. CORRECT DEFICIENCIES AND MAKE NECESSARY ADJUSTMENTS TO O&M MANUALS AND AS-BUILT DRAWINGS FOR APPLICABLE ISSUES IDENTIFIED IN ANY SEASONAL TESTING.

1.9 TESTING REQUIREMENTS

A. SPECIFIC FUNCTIONAL TESTING REQUIREMENTS ARE LISTED FOR EACH SYSTEM IN PART 3 OF THIS SECTION. FROM THESE REQUIREMENTS, THE COMMISSIONING AUTHORITY (CA) SHALL DEVELOP STEP-BY-STEP PROCEDURES TO BE EXECUTED BY THE SUBS AS DIRECTED BY THE COMMISSIONING AUTHORITY. THE TEST REQUIREMENTS FOR EACH PIECE OF EQUIPMENT OR SYSTEM CONTAIN THE FOLLOWING:

1. THE CONTRACTORS RESPONSIBLE TO EXECUTE THE TESTS, UNDER THE DIRECTION OF THE CA.
2. A LIST OF THE INTEGRAL COMPONENTS BEING TESTED.
3. PREFUNCTIONAL CHECKLISTS ASSOCIATED WITH THE COMPONENTS.
4. FUNCTIONS AND MODES TO BE TESTED.
5. REQUIRED CONDITIONS OF THE TEST FOR EACH MODE.
6. SPECIAL PROCEDURES.
7. REQUIRED METHODS OF TESTING.
8. REQUIRED MONITORING.
9. ACCEPTANCE CRITERIA.

10. SAMPLING STRATEGIES ALLOWED.

1.10 TESTING PREREQUISITES

A. THE FOLLOWING APPLICABLE GENERIC PREREQUISITE CHECKLIST ITEMS ARE REQUIRED TO BE LISTED ON EACH WRITTEN FUNCTIONAL TEST FORM AND BE COMPLETED AND CHECKED OFF BY CA PRIOR TO FUNCTIONAL TESTING.

1. ALL RELATED EQUIPMENT HAS BEEN STARTED UP AND START-UP REPORTS AND PREFUNCTIONAL CHECKLISTS SUBMITTED AND APPROVED READY FOR FUNCTIONAL TESTING:
2. ALL CONTROL SYSTEM FUNCTIONS FOR THIS AND ALL INTERLOCKING SYSTEMS ARE PROGRAMMED AND OPERABLE PER CONTRACT DOCUMENTS, INCLUDING FINAL SET POINTS AND SCHEDULES WITH DEBUGGING, LOOP TUNING AND SENSOR CALIBRATIONS COMPLETED. CONTROLS CONTRACTOR TO SIGN AND DATE WHEN READY.
3. TEST AND BALANCE (TAB) COMPLETE AND APPROVED FOR THE HVAC AIR AND WATER SYSTEMS.
4. ALL A/E PUNCH LIST ITEMS FOR THIS EQUIPMENT CORRECTED.
5. THESE FUNCTIONAL TEST PROCEDURES REVIEWED AND APPROVED BY INSTALLING CONTRACTOR.
6. SAFETIES AND OPERATING RANGES REVIEWED BY THE CA.
7. TEST REQUIREMENTS AND SEQUENCES OF OPERATION ATTACHED.
8. SCHEDULES AND SET POINTS ATTACHED.
9. FALSE LOADING EQUIPMENT, SYSTEM AND PROCEDURES READY.
10. SUFFICIENT CLEARANCE AROUND EQUIPMENT FOR SERVICING.

1.11 MONITORING

A. MONITORING IS A METHOD OF TESTING AS A STAND-ALONE METHOD OR TO AUGMENT MANUAL TESTING.

B. ALL POINTS LISTED IN THE REQUIRED MONITORING SECTION OF THE TEST REQUIREMENTS WHICH ARE CONTROL SYSTEM MONITORED POINTS SHALL BE TRENDED BY THE CONTROLS CONTRACTOR. AT THE CA'S REQUEST, THE CONTROLS CONTRACTOR SHALL TREND UP TO 20% MORE POINTS THAN LISTED HEREIN AT NO EXTRA CHARGE.

C. PROVIDE DATA ELECTRONICALLY (MICROSOFT EXCEL) IN 15 MINUTE INTERVALS FOR ALL ANALOG HARDWARE AND SOFTWARE POINTS.

1.12 DEFINITIONS

A. ACCEPTANCE PHASE - PHASE OF CONSTRUCTION AFTER STARTUP AND INITIAL CHECKOUT WHEN FUNCTIONAL PERFORMANCE TESTS, O&M DOCUMENTATION REVIEW AND TRAINING OCCURS.

B. BASIS OF DESIGN - THE BASIS OF DESIGN IS THE DOCUMENTATION OF THE PRIMARY THOUGHT PROCESSES AND ASSUMPTIONS BEHIND DESIGN DECISIONS THAT WERE MADE TO MEET THE DESIGN INTENT. THE BASIS OF DESIGN DESCRIBES THE SYSTEMS, COMPONENTS, CONDITIONS AND METHODS CHOSEN TO MEET THE INTENT.

C. CONTROL SYSTEM - THE CENTRAL BUILDING ENERGY MANAGEMENT CONTROL SYSTEM.

D. DATA LOGGING - MONITORING FLOWS, CURRENTS, STATUS, PRESSURES, ETC. OF EQUIPMENT USING STAND-ALONE DATA LOGGERS SEPARATE FROM THE CONTROL SYSTEM.

E. DEFERRED FUNCTIONAL TESTS - FTS THAT ARE PERFORMED LATER, AFTER SUBSTANTIAL COMPLETION, DUE TO PARTIAL OCCUPANCY, EQUIPMENT, SEASONAL REQUIREMENTS, DESIGN OR OTHER SITE CONDITIONS THAT DISALLOW THE TEST FROM BEING PERFORMED.

F. DEFICIENCY - A CONDITION IN THE INSTALLATION OR FUNCTION OF A COMPONENT, PIECE OF EQUIPMENT OR SYSTEM THAT IS NOT IN COMPLIANCE WITH THE CONTRACT DOCUMENTS (THAT IS, DOES NOT PERFORM PROPERLY OR IS NOT COMPLYING WITH THE DESIGN INTENT).

G. DESIGN INTENT - A DYNAMIC DOCUMENT THAT PROVIDES THE EXPLANATION OF THE IDEAS, CONCEPTS AND CRITERIA THAT ARE CONSIDERED TO BE VERY IMPORTANT TO THE OWNER. IT IS INITIALLY THE OUTCOME OF THE PROGRAMMING AND CONCEPTUAL DESIGN PHASES.

H. DESIGN NARRATIVE OR DESIGN DOCUMENTATION - SECTIONS OF EITHER THE DESIGN INTENT OR BASIS OF DESIGN.

I. FUNCTIONAL PERFORMANCE TEST (FT) - TEST OF THE DYNAMIC FUNCTION AND OPERATION OF EQUIPMENT AND SYSTEMS USING MANUAL (DIRECT OBSERVATION) OR MONITORING METHODS. FUNCTIONAL TESTING IS THE DYNAMIC TESTING OF SYSTEMS (RATHER THAN JUST COMPONENTS) UNDER FULL OPERATION (E.G., THE CHILLER PUMP IS TESTED INTERACTIVELY WITH THE CHILLER FUNCTIONS TO SEE IF THE PUMP RAMPS UP AND DOWN TO MAINTAIN THE DIFFERENTIAL PRESSURE SET POINT). SYSTEMS ARE TESTED UNDER VARIOUS MODES, SUCH AS DURING LOW COOLING OR HEATING LOADS, HIGH LOADS, COMPONENT FAILURES, UNOCCUPIED, VARYING OUTSIDE AIR TEMPERATURES, FIRE ALARM, POWER FAILURE, ETC. THE SYSTEMS ARE RUN THROUGH ALL THE CONTROL SYSTEM'S SEQUENCES OF OPERATION AND COMPONENTS ARE VERIFIED TO BE RESPONDING AS THE SEQUENCES STATE. THE COMMISSIONING AUTHORITY DEVELOPS THE FUNCTIONAL TEST PROCEDURES IN A SEQUENTIAL WRITTEN FORM, COORDINATES, OVERSEES AND DOCUMENTS THE ACTUAL TESTING, WHICH IS PERFORMED BY THE INSTALLING CONTRACTOR OR VENDOR. FTS ARE PERFORMED AFTER PREFUNCTIONAL CHECKLISTS AND STARTUP ARE COMPLETE.

J. INDIRECT INDICATORS - INDICATORS OF A RESPONSE OR CONDITION, SUCH AS A READING FROM A CONTROL SYSTEM SCREEN REPORTING A DAMPER TO BE 100% CLOSED.

K. MANUAL TEST - USING HAND-HELD INSTRUMENTS, IMMEDIATE CONTROL SYSTEM READOUTS OR DIRECT OBSERVATION TO VERIFY PERFORMANCE (CONTRASTED TO ANALYZING MONITORED DATA TAKEN OVER TIME TO MAKE THE "OBSERVATION").

L. MONITORING - THE RECORDING OF PARAMETERS (FLOW, CURRENT, STATUS, PRESSURE, ETC.) OF EQUIPMENT OPERATION USING DATA LOGGERS OR THE TRENDING CAPABILITIES OF CONTROL SYSTEMS.

M. OVER-WRITTEN VALUE - WRITING OVER A SENSOR VALUE IN THE CONTROL SYSTEM TO SEE THE RESPONSE OF A SYSTEM (E.G., CHANGING THE OUTSIDE AIR TEMPERATURE VALUE FROM 50F TO 75F TO VERIFY ECONOMIZER OPERATION). SEE ALSO "SIMULATED SIGNAL."

N. OWNER-CONTRACTED TESTS - TESTS PAID FOR BY THE OWNER OUTSIDE THE GC'S CONTRACT AND FOR WHICH THE CA DOES NOT OVERSEE. THESE TESTS WILL NOT BE REPEATED DURING FUNCTIONAL TESTS IF PROPERLY DOCUMENTED.

O. PREFUNCTIONAL CHECKLIST (PC) - A LIST OF ITEMS TO INSPECT AND ELEMENTARY COMPONENT TESTS TO CONDUCT TO VERIFY PROPER INSTALLATION OF EQUIPMENT, BY THE SUB. PREFUNCTIONAL CHECKLISTS ARE PRIMARILY STATIC INSPECTIONS AND PROCEDURES TO PREPARE THE EQUIPMENT OR SYSTEM FOR INITIAL OPERATION (E.G., BELT TENSION, OIL LEVELS OK, LABELS AFFIXED, GAGES IN PLACE, SENSORS CALIBRATED, ETC.). HOWEVER, SOME PREFUNCTIONAL CHECKLIST ITEMS ENTAIL SIMPLE TESTING OF THE FUNCTION OF A COMPONENT, A PIECE OF EQUIPMENT OR SYSTEM (SUCH AS MEASURING THE VOLTAGE IMBALANCE ON A THREE PHASE PUMP MOTOR OF A CHILLER SYSTEM). THE WORD PREFUNCTIONAL REFERS TO BEFORE FUNCTIONAL TESTING. PREFUNCTIONAL CHECKLISTS AUGMENT AND ARE COMBINED WITH THE MANUFACTURER'S START-UP CHECKLIST. THE COMMISSIONING AUTHORITY ONLY REQUIRES THAT THE PROCEDURES BE DOCUMENTED IN

WRITING, AND DOES NOT WITNESS MUCH OF THE PREFUNCTIONAL CHECK LISTING, EXCEPT FOR LARGER OR MORE CRITICAL PIECES OF EQUIPMENT.

P. SAMPLING - FUNCTIONALLY TESTING ONLY A FRACTION OF THE TOTAL NUMBER OF IDENTICAL OR NEAR IDENTICAL PIECES OF EQUIPMENT.

Q. SEASONAL PERFORMANCE TESTS - FT THAT ARE DEFERRED UNTIL THE SYSTEM(S) WILL EXPERIENCE CONDITIONS CLOSER TO THEIR DESIGN CONDITIONS.

R. SIMULATED CONDITION - CONDITION THAT IS CREATED FOR THE PURPOSE OF TESTING THE RESPONSE OF A SYSTEM (E.G., APPLYING A HAIR BLOWER TO A SPACE SENSOR TO SEE THE RESPONSE IN A VAV BOX).

S. SIMULATED SIGNAL - DISCONNECTING A SENSOR AND USING A SIGNAL GENERATOR TO SEND AN AMPERAGE, RESISTANCE OR PRESSURE TO THE TRANSDUCER AND DDC SYSTEM TO SIMULATE A SENSOR VALUE.

T. STARTUP - THE INITIAL STARTING OR ACTIVATING OF DYNAMIC EQUIPMENT, INCLUDING EXECUTING PREFUNCTIONAL CHECKLISTS.

U. SUBS - THE SUBCONTRACTORS TO THE GENERAL CONTRACTOR WHO PROVIDE AND INSTALL BUILDING COMPONENTS AND SYSTEMS.

V. TEST PROCEDURES - THE STEP-BY-STEP PROCESS WHICH MUST BE EXECUTED TO FULFILL THE TEST REQUIREMENTS. THE TEST PROCEDURES ARE DEVELOPED BY THE CA.

W. TEST REQUIREMENTS - REQUIREMENTS SPECIFYING WHAT MODES AND FUNCTIONS, ETC. SHALL BE TESTED. THE TEST REQUIREMENTS ARE NOT THE DETAILED TEST PROCEDURES.

X. TRENDING - MONITORING USING THE BUILDING CONTROL SYSTEM.

Y. POST CONSTRUCTION PHASE - POST CONSTRUCTION PHASE FOR ENTIRE PROJECT, INCLUDING EQUIPMENT COMPONENTS. WARRANTY BEGINS AT SUBSTANTIAL COMPLETION AND EXTENDS FOR AT LEAST ONE YEAR, UNLESS SPECIFICALLY NOTED OTHERWISE IN THE CONTRACT DOCUMENTS AND ACCEPTED SUBMITTALS.

PART 2 - PRODUCTS

2.1 TEST EQUIPMENT

A. ALL STANDARD TESTING EQUIPMENT REQUIRED TO PERFORM STARTUP AND INITIAL CHECKOUT AND REQUIRED FUNCTIONAL PERFORMANCE TESTING SHALL BE PROVIDED BY THE DIVISION CONTRACTOR FOR THE EQUIPMENT BEING TESTED. FOR EXAMPLE, THE MECHANICAL CONTRACTOR OF DIVISION 15 SHALL ULTIMATELY BE RESPONSIBLE FOR ALL STANDARD TESTING EQUIPMENT FOR THE HVAC SYSTEM AND CONTROLS SYSTEM IN DIVISION 15, EXCEPT FOR EQUIPMENT SPECIFIC TO AND USED BY TAB IN THEIR COMMISSIONING RESPONSIBILITIES. TWO-WAY RADIOS SHALL BE PROVIDED BY THE DIVISION CONTROLLER.

B. SPECIAL EQUIPMENT, TOOLS AND INSTRUMENTS (ONLY AVAILABLE FROM VENDOR, SPECIFIC TO A PIECE OF EQUIPMENT) REQUIRED FOR TESTING EQUIPMENT, ACCORDING TO THESE CONTRACT DOCUMENTS SHALL BE INCLUDED IN THE BASE BID PRICE TO THE CONTRACTOR AND LEFT ON SITE.

C. ALL TESTING EQUIPMENT SHALL BE OF SUFFICIENT QUALITY AND ACCURACY TO TEST AND/OR MEASURE SYSTEM PERFORMANCE WITH THE TOLERANCES SPECIFIED IN THE SPECIFICATIONS.

PART 3 - EXECUTION

3.1 MEETINGS

A. SCOPING MEETING: WITHIN 30 DAYS OF COMMENCEMENT OF CONSTRUCTION, THE CA WILL SCHEDULE, PLAN AND CONDUCT A COMMISSIONING SCOPING MEETING WITH THE ENTIRE COMMISSIONING TEAM IN ATTENDANCE. MEETING MINUTES WILL BE DISTRIBUTED TO ALL PARTIES BY THE CA.

B. MISCELLANEOUS MEETINGS: OTHER MEETINGS WILL BE PLANNED AND CONDUCTED BY THE CA AS CONSTRUCTION PROGRESSES. THESE MEETINGS WILL COVER COORDINATION, DEFICIENCY RESOLUTION AND PLANNING ISSUES WITH PARTICULAR SUBS. THE CA WILL PLAN THESE MEETINGS AND WILL MINIMIZE UNNECESSARY TIME BEING SPENT BY SUBS.

3.2 REPORTING

A. THE CA WILL PROVIDE REGULAR REPORTS TO THE OWNER AND A/E, WITH INCREASING FREQUENCY AS CONSTRUCTION AND COMMISSIONING PROGRESSES.

B. THE CA WILL REGULARLY COMMUNICATE WITH ALL MEMBERS OF THE COMMISSIONING TEAM, KEEPING THEM APPRISED OF COMMISSIONING PROGRESS AND SCHEDULING CHANGES THROUGH MEMOS, PROGRESS REPORTS, ETC.

C. TESTING OR REVIEW APPROVALS AND NON-CONFORMANCE AND DEFICIENCY REPORTS ARE MADE REGULARLY WITH THE REVIEW AND TESTING AS DESCRIBED IN LATER SECTIONS.

3.3 SUBMITTALS

A. THE COMMISSIONING AUTHORITY WILL REVIEW SUBMITTALS RELATED TO THE COMMISSIONED EQUIPMENT FOR CONFORMANCE TO THE CONTRACT DOCUMENTS AS IT RELATES TO THE COMMISSIONING PROCESS, TO THE FUNCTIONAL PERFORMANCE OF THE EQUIPMENT AND ADEQUACY FOR DEVELOPING TEST PROCEDURES. THIS REVIEW IS INTENDED PRIMARILY TO AID IN THE DEVELOPMENT OF FUNCTIONAL TESTING PROCEDURES.

B. THE CA MAY REQUEST ADDITIONAL DESIGN NARRATIVE FROM THE A/E AND CONTROLS CONTRACTOR, DEPENDING ON THE COMPLETENESS OF THE DESIGN INTENT DOCUMENTATION AND SEQUENCES PROVIDED WITH THE SPECIFICATIONS.

3.4 START-UP, PREFUNCTIONAL CHECKLISTS AND INITIAL CHECKOUT

A. THE FOLLOWING PROCEDURES APPLY TO ALL EQUIPMENT TO BE COMMISSIONED,

B. GENERAL:

1. PREFUNCTIONAL CHECKLISTS ARE IMPORTANT TO ENSURE THAT THE EQUIPMENT AND SYSTEMS ARE HOOKED UP AND OPERATIONAL. IT ENSURES THAT FUNCTIONAL PERFORMANCE TESTING (IN-DEPTH SYSTEM CHECKOUT) MAY PROCEED WITHOUT UNNECESSARY DELAYS. EACH PIECE OF EQUIPMENT RECEIVES FULL PREFUNCTIONAL CHECKOUT. NO SAMPLING STRATEGIES ARE USED. THE PREFUNCTIONAL TESTING FOR A GIVEN SYSTEM MUST BE SUCCESSFULLY COMPLETED PRIOR TO FORMAL FUNCTIONAL PERFORMANCE TESTING OF EQUIPMENT OR SUBSYSTEMS OF THE GIVEN SYSTEM.

C. START-UP AND INITIAL CHECKOUT PLAN:

1. THE PRIMARY ROLE OF THE CA IN THIS PROCESS IS TO ENSURE THAT THERE IS WRITTEN DOCUMENTATION THAT EACH OF THE MANUFACTURER-RECOMMENDED PROCEDURES HAVE BEEN COMPLETED. PARTIES RESPONSIBLE FOR PREFUNCTIONAL CHECKLISTS AND STARTUP ARE IDENTIFIED IN THE COMMISSIONING SCOPING MEETING AND IN THE CHECKLIST FORMS. PARTIES RESPONSIBLE FOR EXECUTING FUNCTIONAL PERFORMANCE TESTS ARE IDENTIFIED IN THE TESTING REQUIREMENTS FOR EACH SYSTEM.
2. THE SUBCONTRACTOR RESPONSIBLE FOR THE PURCHASE OF THE EQUIPMENT DEVELOPS THE FULL START-UP PLAN BY COMBINING THE MANUFACTURER'S DETAILED START-UP AND CHECKOUT PROCEDURES FROM THE O&M MANUAL AND THE NORMALLY USED FIELD CHECKOUT SHEETS. THE PLAN WILL INCLUDE CHECKLISTS AND PROCEDURES WITH SPECIFIC BOXES OR LINES FOR RECORDING AND DOCUMENTING THE CHECKING AND INSPECTIONS OF EACH PROCEDURE AND A SUMMARY STATEMENT WITH A SIGNATURE BLOCK AT THE END OF THE PLAN.
3. THE FULL START-UP PLAN COULD CONSIST OF SOMETHING AS SIMPLE AS:
   a. THE MANUFACTURER'S STANDARD WRITTEN START-UP PROCEDURES COPIED FROM THE INSTALLATION MANUALS WITH CHECK BOXES BY EACH PROCEDURE AND A SIGNATURE BLOCK ADDED BY HAND AT THE END.
   b. THE MANUFACTURER'S NORMALLY USED FIELD CHECKOUT SHEETS.
4. THE SUBCONTRACTORS SHALL SUBMIT THE FULL STARTUP PLAN TO THE GENERAL CONTRACTOR WHO WILL BE RESPONSIBLE FOR REVIEWING AND STAMPING THE SUBMITTAL. THE GENERAL CONTRACTOR SHALL BE RESPONSIBLE FOR TRANSMITTING THE FULL SUBMITTAL TO THE CA AND A/E FOR APPROVAL.

D. SENSOR AND ACTUATOR CALIBRATION:

1. ALL FIELD-INSTALLED TEMPERATURE, RELATIVE HUMIDITY, CO, CO2 AND PRESSURE SENSORS AND GAGES, AND ALL ACTUATORS (DAMPERS AND VALVES) ON ALL EQUIPMENT SHALL BE CALIBRATED USING THE METHODS DESCRIBED BELOW. SENSORS INSTALLED IN THE UNIT AT THE FACTORY WITH CALIBRATION CERTIFICATION PROVIDED NEED NOT BE FIELD CALIBRATED.
2. ALL PROCEDURES USED SHALL BE FULLY DOCUMENTED ON THE PREFUNCTIONAL CHECKLISTS OR OTHER SUITABLE FORMS, CLEARLY REFERENCING THE PROCEDURES FOLLOWED AND WRITTEN DOCUMENTATION OF INITIAL, INTERMEDIATE AND FINAL RESULTS. ALL SENSORS SHALL BE CALIBRATED TO THE TOLERANCES FOR THE SPECIFIC PRODUCT.

E. VALVE AND DAMPER STROKE SETUP AND CHECK:

1. FOR ALL VALVE AND DAMPER ACTUATOR POSITIONS CHECKED, VERIFY THE ACTUAL POSITION AGAINST THE BAS READOUT.

F. EXECUTION OF PREFUNCTIONAL CHECKLISTS AND STARTUP:

1. THE CA SHALL OBSERVE, AT MINIMUM, THE PROCEDURES FOR EACH TYPE OF EQUIPMENT TO BE COMMISSIONED.
2. THE SUBS AND VENDORS SHALL EXECUTE STARTUP AND PROVIDE THE CA WITH A SIGNED AND DATED COPY OF THE COMPLETED START-UP AND PREFUNCTIONAL TESTS AND CHECKLISTS.
3. ONLY INDIVIDUALS THAT HAVE DIRECT KNOWLEDGE AND WITNESSED THAT A LINE ITEM TASK ON THE PREFUNCTIONAL CHECKLIST WAS ACTUALLY PERFORMED SHALL INITIAL OR CHECK THAT ITEM OFF. IT IS NOT ACCEPTABLE FOR WITNESSING SUPERVISORS TO FILL OUT THESE FORMS.

G. DEFICIENCIES, NON-CONFORMANCE AND APPROVAL IN CHECKLISTS AND STARTUP:

1. THE SUB CONTRACTORS SHALL CLEARLY LIST ANY OUTSTANDING ITEMS OF THE INITIAL START-UP AND PREFUNCTIONAL PROCEDURES THAT WERE NOT COMPLETED SUCCESSFULLY, AT THE BOTTOM OF THE PROCEDURES FORM OR ON AN ATTACHED SHEET. THE PROCEDURES FORM AND ANY OUTSTANDING DEFICIENCIES ARE PROVIDED TO THE CA WITHIN TWO DAYS OF TEST COMPLETION.

2. THE CA REVIEWS THE REPORT AND SUBMITS EITHER A NON-COMPLIANCE REPORT OR AN APPROVAL FORM TO THE A/E AND GC. WHEN SATISFACTORILY COMPLETED, THE CA RECOMMENDS APPROVAL OF THE EXECUTION OF THE CHECKLISTS AND STARTUP OF EACH SYSTEM TO THE A/E USING A STANDARD FORM.

3.5 FUNCTIONAL PERFORMANCE TESTING

A. THIS SUB-SECTION APPLIES TO ALL COMMISSIONING FUNCTIONAL TESTING FOR ALL DIVISIONS.

B. THE GENERAL LIST OF EQUIPMENT TO BE COMMISSIONED IS FOUND IN THIS SECTION.

C. THE PARTIES RESPONSIBLE TO EXECUTE EACH TEST ARE LISTED WITH EACH TEST.

D. OBJECTIVES AND SCOPE:

1. THE OBJECTIVE OF FUNCTIONAL PERFORMANCE TESTING IS TO DEMONSTRATE THAT EACH SYSTEM IS OPERATING ACCORDING TO THE DOCUMENTED DESIGN INTENT AND CONTRACT DOCUMENTS. FUNCTIONAL TESTING FACILITATES BRINGING THE SYSTEMS FROM A STATE OF SUBSTANTIAL COMPLETION TO FULL DYNAMIC OPERATION. ADDITIONALLY, DURING THE TESTING PROCESS, AREAS OF DEFICIENT PERFORMANCE ARE IDENTIFIED AND CORRECTED, IMPROVING THE OPERATION AND FUNCTIONING OF THE SYSTEMS.
2. IN GENERAL, EACH SYSTEM SHOULD BE OPERATED THROUGH ALL MODES OF OPERATION (SEASONAL, OCCUPIED, UNOCCUPIED, WARM-UP, COOL-DOWN, PART- AND FULL-LOAD) WHERE THERE IS A SPECIFIED SYSTEM RESPONSE. VERIFYING EACH SEQUENCE IN THE SEQUENCES OF OPERATION IS REQUIRED. PROPER RESPONSES TO SUCH MODES AND CONDITIONS AS POWER FAILURE, FREEZE CONDITION, LOW OIL PRESSURE, NO FLOW, EQUIPMENT FAILURE, ETC. SHALL ALSO BE TESTED. SPECIFIC MODES REQUIRED IN THIS PROJECT ARE GIVEN IN SECTIONS.

E. DEVELOPMENT OF TEST PROCEDURES:

1. BEFORE TEST PROCEDURES ARE WRITTEN, THE CA SHALL OBTAIN ALL REQUESTED DOCUMENTATION AND A CURRENT LIST OF CHANGE ORDERS AFFECTING EQUIPMENT OR SYSTEMS, INCLUDING AN UPDATED POINTS LIST, PROGRAM CODE, CONTROL SEQUENCES AND PARAMETERS.
2. THE CA SHALL DEVELOP SPECIFIC TEST PROCEDURES AND FORMS TO VERIFY AND DOCUMENT PROPER OPERATION OF EACH PIECE OF EQUIPMENT AND SYSTEM. EACH SUB OR VENDOR RESPONSIBLE TO EXECUTE A TEST, SHALL PROVIDE LIMITED ASSISTANCE TO THE CA IN DEVELOPING THE PROCEDURES REVIEW (ANSWERING QUESTIONS ABOUT EQUIPMENT, OPERATION, SEQUENCES, ETC.). PRIOR TO EXECUTION, THE CA SHALL PROVIDE A COPY OF THE TEST PROCEDURES TO THE SUB(S) WHO SHALL REVIEW THE TESTS FOR FEASIBILITY, SAFETY, EQUIPMENT AND WARRANTY PROTECTION.
3. THE CA SHALL REVIEW OWNER-CONTRACTED, FACTORY TESTING OR REQUIRED OWNER ACCEPTANCE TESTS WHICH THE CA IS NOT RESPONSIBLE TO OVERSEE, INCLUDING DOCUMENTATION FORMAT, AND SHALL DETERMINE WHAT FURTHER TESTING OR FORMAT CHANGES MAY BE REQUIRED TO COMPLY WITH THE SPECIFICATIONS. REDUNDANCY OF TESTING SHALL BE MINIMIZED.
4. THE TEST PROCEDURE FORMS DEVELOPED SHALL INCLUDE (BUT NOT BE LIMITED TO) THE FOLLOWING INFORMATION:
   a. SYSTEM AND EQUIPMENT OR COMPONENT NAME(S)
   b. EQUIPMENT LOCATION AND ID NUMBER
   c. DATE
   d. PROJECT NAME
   e. PARTICIPATING PARTIES
   f. A COPY OF THE SPECIFICATION SECTION DESCRIBING THE TEST REQUIREMENTS

g. A COPY OF THE SPECIFIC SEQUENCE OF OPERATIONS OR OTHER SPECIFIED PARAMETERS BEING VERIFIED
h. FORMULAS USED IN ANY CALCULATIONS
i. REQUIRED PRE-TEST FIELD MEASUREMENTS
j. INSTRUCTIONS FOR SETTING UP THE TEST.
k. SPECIAL CAUTIONS, ALARM LIMITS, ETC.
l. SPECIFIC STEP-BY-STEP PROCEDURES TO EXECUTE THE TEST, IN A CLEAR, SEQUENTIAL AND REPEATABLE FORMAT
m. ACCEPTANCE CRITERIA OF PROPER PERFORMANCE WITH A YES / NO CHECK BOX TO ALLOW FOR CLEARLY MARKING WHETHER OR NOT PROPER PERFORMANCE OF EACH PART OF THE TEST WAS ACHIEVED.
n. A SECTION FOR COMMENTS
o. SIGNATURES AND DATE BLOCK FOR THE CA

5. SAMPLING:
   a. THE RECOMMENDED SAMPLING RATES ARE SPECIFIED WITH EACH TYPE OF EQUIPMENT IN THE TESTING SECTIONS OF THIS SPECIFICATION. IT IS NOTED THAT NO SAMPLING BY SUBS IS ALLOWED IN PREFUNCTIONAL CHECKLIST EXECUTION. THE FOLLOWING IS AN EXAMPLE OF HOW MULTIPLE PIECES OF EQUIPMENT THAT ARE IDENTICAL MAY BE TESTED.
      1) RANDOMLY TEST AT LEAST 20% OF EACH GROUP OF IDENTICAL EQUIPMENT. IN NO CASE TEST LESS THAN THREE UNITS IN EACH GROUP. THIS 20%, OR THREE, CONSTITUTE THE “FIRST SAMPLE.”
      2) IF 10% OF THE UNITS IN THE FIRST SAMPLE FAIL THE FUNCTIONAL PERFORMANCE TESTS, TEST ANOTHER 20% OF THE GROUP (THE SECOND SAMPLE).
      3) IF 10% OF THE UNITS IN THE SECOND SAMPLE FAIL, TEST ALL REMAINING UNITS IN THE WHOLE GROUP.
   b. IF AT ANY POINT, FREQUENT FAILURES ARE OCCURRING AND TESTING IS BECOMING MORE TROUBLESHOOTING THAN VERIFICATION, THE CA MAY STOP THE TESTING AND REQUIRE THE RESPONSIBLE SUB TO PERFORM AND DOCUMENT A CHECKOUT OF THE REMAINING UNITS, PRIOR TO CONTINUING WITH FUNCTIONALLY TESTING THE REMAINING UNITS.

F. COORDINATION AND SCHEDULING:

1. THE SUBS SHALL PROVIDE SUFFICIENT NOTICE TO THE CA AND GENERAL CONTRACTOR REGARDING THEIR COMPLETION SCHEDULE FOR THE PREFUNCTIONAL CHECKLISTS AND STARTUP OF ALL EQUIPMENT AND SYSTEMS. THE CA WILL SCHEDULE FUNCTIONAL TESTS THROUGH THE GENERAL CONTRACTOR AND AFFECTED SUBS. THE CA SHALL DIRECT, WITNESS AND DOCUMENT THE FUNCTIONAL TESTING OF ALL EQUIPMENT AND SYSTEMS. THE SUBS SHALL EXECUTE THE TESTS.
2. IN GENERAL, FUNCTIONAL TESTING IS CONDUCTED AFTER PREFUNCTIONAL TESTING AND STARTUP HAS BEEN SATISFACTORILY COMPLETED. THE CONTROL SYSTEM IS SUFFICIENTLY TESTED AND APPROVED BY THE CA BEFORE IT IS USED FOR TAB OR TO VERIFY PERFORMANCE OF OTHER COMPONENTS OR SYSTEMS.

G. PROBLEM SOLVING:

1. THE CA WILL RECOMMEND SOLUTIONS TO PROBLEMS FOUND, HOWEVER THE BURDEN OF RESPONSIBILITY TO SOLVE, CORRECT AND RETEST PROBLEMS IS WITH THE GC, SUBS AND A/E.

3.6 DOCUMENTATION, NON-CONFORMANCE AND APPROVAL OF TESTS

A. DOCUMENTATION:

1. THE CA SHALL WITNESS AND DOCUMENT THE RESULTS OF ALL FUNCTIONAL PERFORMANCE TESTS USING THE SPECIFIC PROCEDURAL FORMS DEVELOPED FOR THAT PURPOSE. PRIOR TO TESTING, THESE FORMS ARE PROVIDED TO THE GENERAL

CONTRACTOR FOR REVIEW AND APPROVAL AND TO THE SUBS FOR REVIEW. THE CA WILL INCLUDE THE FILLED OUT FORMS IN THE SYSTEMS MANUALS.

B. NON-CONFORMANCE:

1. THE CA WILL RECORD THE RESULTS OF THE FUNCTIONAL TEST ON THE PROCEDURE OR TEST FORM. ALL DEFICIENCIES OR NON-CONFORMANCE ISSUES SHALL BE NOTED AND REPORTED TO THE GENERAL CONTRACTOR AND A/E ON A STANDARD NON-COMPLIANCE FORM.
2. CORRECTIONS OF MINOR DEFICIENCIES IDENTIFIED MAY BE MADE DURING THE TESTS AT THE DISCRETION OF THE CA. IN SUCH CASES THE DEFICIENCY AND RESOLUTION WILL BE DOCUMENTED ON THE PROCEDURE FORM.
3. COST OF RETESTING:
   a. THE COST FOR THE SUB TO RETEST A PREFUNCTIONAL OR FUNCTIONAL TEST, IF THEY ARE RESPONSIBLE FOR THE DEFICIENCY, SHALL BE THEIRS.
   b. FOR A DEFICIENCY IDENTIFIED, NOT RELATED TO ANY PREFUNCTIONAL CHECKLIST OR START-UP FAULT, THE FOLLOWING SHALL APPLY: THE CA WILL DIRECT THE RETESTING OF THE EQUIPMENT ONCE AT NO “CHARGE” TO THE SUBS FOR THEIR TIME.
   c. ANY REQUIRED RETESTING BY ANY CONTRACTOR SHALL NOT BE CONSIDERED A JUSTIFIED REASON FOR A CLAIM OF DELAY OR FOR A TIME EXTENSION BY THE GENERAL CONTRACTOR.

C. APPROVAL:

1. THE CA NOTES EACH SATISFACTORILY DEMONSTRATED FUNCTION ON THE TEST FORM. FORMAL APPROVAL OF THE FUNCTIONAL TEST IS MADE LATER AFTER REVIEW BY THE CA AND BY THE A/E. THE CA RECOMMENDS ACCEPTANCE OF EACH TEST TO THE A/E USING A STANDARD FORM. THE CA GIVES FINAL APPROVAL ON EACH TEST USING THE SAME FORM, PROVIDING A SIGNED COPY TO THE GENERAL CONTRACTOR.

3.7 DEFERRED TESTING

A. UNFORESEEN DEFERRED TESTS:

1. IF ANY CHECK OR TEST CANNOT BE COMPLETED DUE TO THE BUILDING STRUCTURE, REQUIRED OCCUPANCY CONDITION OR OTHER DEFICIENCY, EXECUTION OF CHECKLISTS AND FUNCTIONAL TESTING MAY BE DELAYED UPON APPROVAL OF THE CA. THESE TESTS WILL BE CONDUCTED IN THE SAME MANNER AS THE SEASONAL TESTS AS SOON AS POSSIBLE. SERVICES OF NECESSARY PARTIES WILL BE NEGOTIATED.

B. SEASONAL TESTING:

1. DURING THE POST CONSTRUCTION PHASE, SEASONAL TESTING (TESTS DELAYED UNTIL WEATHER CONDITIONS ARE CLOSER TO THE SYSTEM’S DESIGN) SHALL BE COMPLETED AS PART OF THIS CONTRACT. THE CA SHALL COORDINATE THIS ACTIVITY. TESTS WILL BE EXECUTED, DOCUMENTED AND DEFICIENCIES CORRECTED BY THE APPROPRIATE SUBS, WITH FACILITIES STAFF AND THE CA WITNESSING. ANY FINAL ADJUSTMENTS TO THE O&M MANUALS AND AS-BUILTS DUE TO THE TESTING WILL BE NOTED BY THE GC.

3.8 OPERATION AND MAINTENANCE MANUALS

A. STANDARD O&M MANUALS:

1. THE SPECIFIC CONTENT AND FORMAT REQUIREMENTS FOR THE STANDARD O&M MANUALS ARE DETAILED IN THE SPECIFIC SECTIONS.
2. CA REVIEW:

a. PRIOR TO SUBSTANTIAL COMPLETION, THE CA SHALL REVIEW THE O&M MANUALS, DOCUMENTATION TO VERIFY COMPLIANCE WITH THE SPECIFICATIONS. THE CA WILL COMMUNICATE DEFICIENCIES IN THE MANUALS TO THE A/E AND GC. UPON A SUCCESSFUL REVIEW OF THE CORRECTIONS, THE CA RECOMMENDS APPROVAL AND ACCEPTANCE OF THESE SECTIONS OF THE O&M MANUALS TO THE A/E AND GC.

3. FINAL REPORT DETAILS:
   a. THE FINAL COMMISSIONING REPORT SHALL INCLUDE AN EXECUTIVE SUMMARY, LIST OF PARTICIPANTS AND ROLES, BRIEF BUILDING DESCRIPTION, OVERVIEW OF COMMISSIONING AND TESTING SCOPE AND A GENERAL DESCRIPTION OF TESTING AND VERIFICATION METHODS. FOR EACH PIECE OF COMMISSIONED EQUIPMENT, THE REPORT SHOULD CONTAIN THE DISPOSITION OF THE COMMISSIONING AUTHORITY REGARDING THE ADEQUACY OF THE EQUIPMENT AND DOCUMENTATION IN THE FOLLOWING AREAS: 1) EQUIPMENT MEETING THE EQUIPMENT SPECIFICATIONS, 2) EQUIPMENT INSTALLATION, 3) FUNCTIONAL PERFORMANCE AND EFFICIENCY, 4) EQUIPMENT DOCUMENTATION AND DESIGN INTENT. ALL OUTSTANDING NON-COMPLIANCE ITEMS SHALL BE SPECIFICALLY LISTED. RECOMMENDATIONS FOR IMPROVEMENT TO EQUIPMENT OR OPERATIONS, FUTURE ACTIONS, COMMISSIONING PROCESS CHANGES, ETC. SHALL ALSO BE LISTED. THE FUNCTIONAL PERFORMANCE AND EFFICIENCY SECTION FOR EACH PIECE OF EQUIPMENT SHALL INCLUDE A BRIEF DESCRIPTION OF THE VERIFICATION METHOD USED (MANUAL TESTING, BAS TREND LOGS, DATA LOGGERS, ETC.) AND INCLUDE OBSERVATIONS AND CONCLUSIONS FROM THE TESTING.

3.9 TRAINING OF OWNER PERSONNEL

A. THE GENERAL CONTRACTOR SHALL BE RESPONSIBLE FOR TRAINING COORDINATION AND SCHEDULING AND ULTIMATELY FOR ENSURING THAT TRAINING IS COMPLETED.

B. THE CA SHALL BE RESPONSIBLE FOR APPROVING THE CONTENT AND ADEQUACY OF THE TRAINING OF OWNER PERSONNEL FOR COMMISSIONED EQUIPMENT.
   1. THE CA SHALL INTERVIEW THE FACILITY MANAGER AND LEAD ENGINEER TO DETERMINE THE SPECIAL NEEDS AND AREAS WHERE TRAINING WILL BE MOST VALUABLE. THE OWNER AND CA SHALL DECIDE HOW RIGOROUS THE TRAINING SHOULD BE FOR EACH PIECE OF COMMISSIONED EQUIPMENT. THE CA SHALL COMMUNICATE THE RESULTS TO THE SUBS AND VENDORS WHO HAVE TRAINING RESPONSIBILITIES.
   2. IN ADDITION TO THESE GENERAL REQUIREMENTS, THE SPECIFIC TRAINING REQUIREMENTS OF OWNER PERSONNEL BY SUBS AND VENDORS IS SPECIFIED IN THE SPECIFIC SECTIONS.
   3. EACH SUB AND VENDOR RESPONSIBLE FOR TRAINING WILL SUBMIT A WRITTEN TRAINING PLAN TO THE CA FOR REVIEW AND APPROVAL PRIOR TO TRAINING. THE PLAN WILL COVER THE FOLLOWING ELEMENTS:
      a. EQUIPMENT (INCLUDED IN TRAINING)
      b. INTENDED AUDIENCE
      c. LOCATION OF TRAINING
      d. OBJECTIVES
      e. SUBJECTS COVERED (DESCRIPTION, DURATION OF DISCUSSION, SPECIAL METHODS, ETC.)
      f. DURATION OF TRAINING ON EACH SUBJECT
      g. INSTRUCTOR FOR EACH SUBJECT
      h. METHODS (CLASSROOM LECTURE, VIDEO, SITE WALK-THROUGH, ACTUAL OPERATIONAL DEMONSTRATIONS, WRITTEN HANDOUTS, ETC.)
      i. INSTRUCTOR AND QUALIFICATIONS
   4. FOR THE PRIMARY HVAC EQUIPMENT, THE CONTROLS CONTRACTOR SHALL PROVIDE A SHORT DISCUSSION OF THE CONTROL OF THE EQUIPMENT DURING THE MECHANICAL OR ELECTRICAL TRAINING CONDUCTED BY OTHERS.
   5. THE CA DEVELOPS AN OVERALL TRAINING PLAN AND COORDINATES AND SCHEDULES, WITH THE GC. THE CA DEVELOPS CRITERIA FOR DETERMINING THAT THE TRAINING WAS SATISFACTORILY COMPLETED, INCLUDING ATTENDING SOME OF THE TRAINING,

ETC. THE CA RECOMMENDS APPROVAL OF THE TRAINING TO THE A/E AND GENERAL CONTRACTOR USING A STANDARD FORM.

6. THE DESIGN ENGINEER SHALL AT THE FIRST TRAINING SESSION PRESENT THE OVERALL SYSTEM DESIGN CONCEPT AND THE DESIGN CONCEPT OF EACH EQUIPMENT SECTION. THIS PRESENTATION SHALL BE 8 HOURS IN LENGTH AND INCLUDE A REVIEW OF ALL SYSTEMS USING THE SIMPLIFIED SYSTEM SCHEMATICS (ONE-LINE DRAWINGS) INCLUDING BOILER WATER SYSTEMS, AHU SYSTEMS, HEATING SYSTEMS, FUEL GAS SUPPLY SYSTEMS, SUPPLY AIR SYSTEMS, EXHAUST SYSTEM AND OUTSIDE AIR STRATEGIES, DUST COLLECTION AND BAS SYSTEM.

PLUMBING ((SAMPLE: TO BE MODIFIED BY DESIGNER TO SUIT PROJECT CONDITIONS))

3.10 RAIN WATER COLLECTION SYSTEM

A. TO BE DETERMINED.

3.11 SUMP PUMP

A. PARTIES RESPONSIBLE TO EXECUTE FUNCTIONAL TEST:

1. ELECTRICAL CONTRACTOR
2. PLUMBING CONTRACTOR: OPERATE THE CONTROLS TO ACTIVATE THE EQUIPMENT.
3. CA: TO WITNESS AND DOCUMENT TESTING.
4. MANUFACTURER'S REPRESENTATIVE.

B. INTEGRAL COMPONENTS OR RELATED EQUIPMENT BEING TESTED: PREFUNCTIONAL TESTS MUST BE COMPLETE FOR ALL OF THE COMPONENTS LISTED BELOW PRIOR TO PERFORMING THIS FUNCTIONAL TEST.

1. FLOAT SWITCH SETTINGS
2. MINIMUM RUN TIMER
3. HIGH WATER ALARM

C. PREREQUISITES:

1. THE APPLICABLE PREREQUISITE CHECKLIST ITEMS LISTED IN PART 1 OF THIS SECTION AND PARAGRAPH B ABOVE SHALL BE LISTED ON EACH FUNCTIONAL TEST FORM AND CHECKED OFF PRIOR TO FUNCTIONAL TESTING. THE COMMISSIONING AGENT WILL ALSO SPOT-CHECK MISC. ITEMS AND CALIBRATIONS ON THE PREFUNCTIONAL CHECKLISTS PREVIOUSLY COMPLETED BY THE INSTALLER, BEFORE THE BEGINNING OF FUNCTIONAL TESTING.

D. FUNCTIONS/MODES REQUIRED TO BE TESTED, TEST METHODS:

1. THE FOLLOWING TESTING REQUIREMENTS ARE IN ADDITION TO AND DO NOT REPLACE ANY TESTING REQUIREMENTS ELSE WHERE IN THIS SPECIFICATION.

FUNCTION/MODE	TEST METHOD MANUAL, MONITORING, EITHER OR BOTH[1]	REQUIRED SEASONAL TEST
GENERAL 1. TEST EACH SEQUENCE IN THE SEQUENCE OF OPERATIONS, AND OTHER SIGNIFICANT MODES AND SEQUENCES NOT MENTIONED; INCLUDING STARTUP, SHUTDOWN AND POWER FAILURE. TEST FUNCTIONALITY OF THIS PIECE OF EQUIPMENT OR SYSTEM IN ALL	MANUAL	

FUNCTION/MODE	TEST METHOD MANUAL, MONITORING, EITHER OR BOTH[1]	REQUIRED SEASONAL TEST
CONTROL STRATEGIES OR INTERLOCKS THAT IT IS ASSOCIATED WITH.		
IN ADDITION TO, OR AS PART OF (1) ABOVE, THE FOLLOWING MODES OR TESTS ARE REQUIRED:		
2. VERIFY SET POINTS AND RUN TIMES TO BE REASONABLE AND APPROPRIATE.		
3. VERIFY OPERATION AND ACTIVATION OF HIGH WATER ALARM AT ALL LOCATIONS.	MANUAL	

[1]REFER TO SPECIAL PROCEDURES

E. SPECIAL PROCEDURES (OTHER EQUIPMENT TO TEST WITH, ETC.; REFERENCE TO FUNCTION ID): NONE

F. SAMPLING STRATEGY: TEST ALL UNITS.

END OF SUMP PUMP

3.12 PLUMBING WATER SYSTEM

A. PARTIES RESPONSIBLE TO EXECUTE FUNCTIONAL TEST

1. CA: WITNESS AND DOCUMENT TESTING.
2. PLUMBING CONTRACTOR TO MAKE ALL ADJUSTMENTS.

B. INTEGRAL COMPONENTS OR RELATED EQUIPMENT BEING TESTED

1. THIS PROCEDURE APPLIES TO THE FOLLOWING SYSTEMS:
   a. HOT AND COLD DOMESTIC WATER SYSTEMS
   b. HOT AND COLD NON-POTABLE WATER SYSTEMS
2. HOT WATER HEATERS (HEATERS, MIXING VALVES)
3. RECIRCULATING PUMPS

C. PREREQUISITES: THE APPLICABLE PREREQUISITE CHECKLIST ITEMS SHALL BE CHECKED OFF PRIOR TO FUNCTIONAL TESTING. THE COMMISSIONING AGENT MAY ALSO SPOT-CHECK MISC. ITEMS AND CALIBRATIONS ON THE PREFUNCTIONAL CHECKLISTS PREVIOUSLY COMPLETED BY THE INSTALLER, BEFORE THE BEGINNING OF FUNCTIONAL TESTING.

D. FUNCTIONS/MODES REQUIRED TO BE TESTED, TEST METHODS AND SEASONAL TEST REQUIREMENTS

FUNCTION/MODE	TEST METHOD
1. TEST EACH SEQUENCE IN THE SEQUENCE OF OPERATIONS, AND OTHER SIGNIFICANT MODES AND SEQUENCES NOT MENTIONED; INCLUDING STARTUP, SHUTDOWN, UNOCCUPIED & MANUAL MODES AND POWER FAILURE. TEST FUNCTIONALITY OF THIS PIECE OF EQUIPMENT OR SYSTEM IN ALL CONTROL STRATEGIES OR INTERLOCKS THAT IT IS ASSOCIATED WITH.	MANUAL
2. VERIFY SCHEDULES AND SET POINTS TO BE REASONABLE AND APPROPRIATE	
3. MIXING VALVE OPERATION AND TEMPERATURE CONTROL	EITHER
4. SENSOR CALIBRATION CHECKS ON HOT WATER TEMPERATURE	MANUAL

E. SPECIAL PROCEDURES (OTHER EQUIPMENT TO TEST WITH, ETC.; REFERENCE TO FUNCTION ID)

1. NONE

F. REQUIRED MONITORING

1. NONE

G. ACCEPTANCE CRITERIA (REFERENCED BY FUNCTION OR MODE ID)

1. FOR THE CONDITIONS, SEQUENCES AND MODES TESTED, EQUIPMENT RESPONDS TO CHANGING CONDITIONS AND PARAMETERS APPROPRIATELY AS EXPECTED, AS SPECIFIED AND ACCORDING TO ACCEPTABLE OPERATING PRACTICE.

H. SAMPLING STRATEGY FOR IDENTICAL UNITS

1. NO SAMPLING. TEST ALL UNITS.

END OF PLUMBING WATER SYSTEM

MECHANICAL ((SAMPLE: TO BE MODIFIED BY DESIGNER TO SUIT PROJECT CONDITIONS))

3.13 HOT WATER HEATING SYSTEM (BOILERS, PUMPS, DISTRIBUTION)

A. PARTIES RESPONSIBLE TO EXECUTE FUNCTIONAL TEST:

1. VENDOR SUPPORT REPRESENTATIVE
2. CONTROLS CONTRACTOR: OPERATE THE CONTROLS, AS NEEDED
3. HVAC MECHANICAL CONTRACTOR OR VENDOR: ASSIST IN TESTING SEQUENCES
4. CA: TO WITNESS AND DOCUMENT TESTING

B. INTEGRAL COMPONENTS OR RELATED EQUIPMENT BEING TESTED: PREFUNCTIONAL TESTS MUST BE COMPLETE FOR ALL OF THE COMPONENTS LISTED BELOW PRIOR TO PERFORMING THIS FUNCTIONAL TEST.

1. BOILERS
2. HW PUMPS
3. HW PUMP VFDS
4. BURNER AND BLOWER
5. PRESSURIZED COMPRESSION TANK AND AIR SEPARATION
6. WATER TREATMENT AND WATER MAKEUP SYSTEMS

C. PREREQUISITES:

1. THE APPLICABLE PREREQUISITE CHECKLIST ITEMS LISTED IN PART 1 OF THIS SECTION AND PARAGRAPH B ABOVE SHALL BE LISTED ON EACH FUNCTIONAL TEST FORM AND CHECKED OFF PRIOR TO FUNCTIONAL TESTING. THE COMMISSIONING AGENT WILL ALSO SPOT-CHECK MISC. ITEMS AND CALIBRATIONS ON THE PREFUNCTIONAL CHECKLISTS PREVIOUSLY COMPLETED BY THE INSTALLER, BEFORE THE BEGINNING OF FUNCTIONAL TESTING.

D. FUNCTIONS/MODES REQUIRED TO BE TESTED, TEST METHODS AND SEASONAL TEST REQUIREMENTS.

1. THE FOLLOWING TESTING REQUIREMENTS ARE IN ADDITION TO AND DO NOT REPLACE ANY TESTING REQUIREMENTS ELSEWHERE IN THIS SPECIFICATION.

FUNCTION / MODE	TEST METHOD MANUAL, MONITORING, EITHER OR BOTH	REQUIRED SEASONAL TEST[1]
GENERAL 1. TEST EACH SEQUENCE IN THE SEQUENCE OF OPERATIONS, AND OTHER SIGNIFICANT MODES AND SEQUENCES NOT MENTIONED; INCLUDING STARTUP, SHUTDOWN, UNOCCUPIED & MANUAL MODES AND POWER FAILURE. TEST FUNCTIONALITY OF THIS PIECE OF EQUIPMENT OR SYSTEM IN ALL CONTROL STRATEGIES OR INTERLOCKS WITH WHICH IT IS ASSOCIATED.	MANUAL	
IN ADDITION TO, OR AS PART OF (1) ABOVE, THE FOLLOWING MODES OR TESTS ARE REQUIRED:		
2. SUPPLY PUMP STAGING, BYPASS VALVE OPERATION, IF NO VFD AND HWT RESET. VFD OPERATION: MODULATION TO MINIMUM, CONTROL SYSTEM PID, PROPORTIONAL BAND OF SPEED VS CONTROLLING PARAMETER, VERIFICATION OF PROGRAM SETTINGS,, ALARMS, ETC.	BOTH	HEATING
3. CHECK ALL ALARMS AND SAFETIES (HIGH AND LOW PRESSURE AND TEMPERATURE, ETC.), PRV AND FLOW SWITCH FUNCTIONS	MANUAL	
4. TEST EACH POSSIBLE LEAD BOILER AS LEAD BOILER, AND EACH PUMP AS LEAD PUMP. TEST PUMP LOCKOUTS.	MANUAL	
5. VERIFY BOILER INLET/OUTLET PRESSURES WITH STARTUP REPORT AND MANUFACTURER'S RECOMMENDATIONS.	MANUAL	
6. SENSOR AND ACTUATOR CALIBRATION CHECKS ON: HWST, HWRT, PRESSURE SENSOR CONTROLLING PUMP SPEED, MIXING VALVE AND OTHER RANDOM CHECKS (EMS READOUT AGAINST HAND-HELD CALIBRATED INSTRUMENT MUST BE WITHIN 0.5°F FOR TEMPS. OR WITHIN A TOLERANCE EQUAL TO 10% OF THE PRESSURE SET POINT, WITH A TEST GAGE).	MANUAL	
7. CONSTANCY OF DIFFERENTIAL PRESSURE (PUMP CONTROL PARAMETER)	MONITORING	HEATING
8. TREND ALL TEMPERATURE, PRESSURE, SPEED AND CONTROL POINTS FROM THE START OF FUNCTIONAL PERFORMANCE TESTING UNTIL POST CONSTRUCTION PHASE IS COMPLETE.	MONITORING	BOTH
9. BURNER OPERATION AND CONTROLS, FUEL GAS PILOT, FLOW AND PRESSURE, FLUE GASES AND BAROMETRIC DAMPERS OUTLET TEMPERATURE EMISSION CONTROLS.		
10. WATER TREATMENT, WATER LEVELS, PRESSURE AND TEMPERATURE SAFETIES AND ALARMS.		
11. VERIFY SCHEDULES AND SET POINTS TO BE REASONABLE AND APPROPRIATE		

E. SPECIAL PROCEDURES (OTHER EQUIPMENT TO TEST WITH, ETC.; REFERENCE TO FUNCTION ID):

1. FALSE LOAD BOILER, IF NECESSARY.
2. TESTING OF BOILER SAFETY VALVES.
3. BOILER INSPECTOR'S TESTS.

F. ACCEPTANCE CRITERIA (REFERENCED BY FUNCTION OR MODE ID):

1. FOR THE CONDITIONS, SEQUENCES, AND MODES TESTED, THE BOILERS, INTEGRAL COMPONENTS AND RELATED EQUIPMENT RESPOND TO VARYING LOADS AND CHANGING CONDITIONS AND PARAMETERS APPROPRIATELY AS EXPECTED, AS SPECIFIED AND ACCORDING TO ACCEPTABLE OPERATING PRACTICE.
2. BOILER SHALL MAINTAIN THE SUPPLY WATER SET POINT TO WITHIN +/- 3.0F OF SET POINT DEAD BAND WITHOUT EXCESSIVE HUNTING.

3. PUMPING SYSTEM AND CONTROLS SHALL MAINTAIN THE CURRENT DESIRED PRESSURE SET POINT TO WITHIN AN AMOUNT EQUAL TO 10% OF THE SET POINT VALUE EITHER SIDE OF THE DEAD BAND WITHOUT EXCESSIVE HUNTING.
4. MAX SOUND: 84 DBA
5. GAS PRESSURE: 2.5" WC, 85% EFFICIENCY
6. MAX PRESSURE: 160 PSIG
7. EMISSIONS < 200 PPM CO, < 20 PPM NOX

G. SAMPLING STRATEGY FOR IDENTICAL UNITS: NO SAMPLING, TEST ALL.

END OF HOT WATER HEATING SYSTEM (BOILERS, PUMPS, DISTRIBUTION)

3.14 TERMINAL UNITS (FCU, FPT, VAV, CUH, UH)

(THIS APPLIES TO STANDARD APPLICATIONS, CRITICAL APPLICATIONS WILL HAVE ADDITIONAL TESTS AND A HIGHER FRACTION TESTED.)

A. PARTIES RESPONSIBLE TO EXECUTE FUNCTIONAL TEST:

1. CONTROLS CONTRACTOR: OPERATE THE CONTROLS TO ACTIVATE THE EQUIPMENT.
2. CA TO RECORD RESULTS.
3. MECHANICAL CONTRACTOR TO MAKE ANY ADJUSTMENTS.

B. INTEGRAL COMPONENTS OR RELATED EQUIPMENT BEING TESTED: PREFUNCTIONAL TESTS MUST BE COMPLETE FOR ALL OF THE COMPONENTS LISTED BELOW PRIOR TO PERFORMING THIS FUNCTIONAL TEST.

1. VAV BOXES W/ AND W/O REHEAT COILS
2. RADIATION
3. UNIT HEATERS
4. AIR HANDLING SYSTEMS

C. PREREQUISITES:

1. THE APPLICABLE PREREQUISITE CHECKLIST ITEMS LISTED IN THE PART 1 OF THIS SECTION AND PARAGRAPH B ABOVE SHALL BE LISTED ON EACH FUNCTIONAL TEST FORM AND CHECKED OFF PRIOR TO FUNCTIONAL TESTING. THE COMMISSIONING AGENT WILL ALSO SPOT-CHECK MISC. ITEMS AND CALIBRATIONS ON THE PREFUNCTIONAL CHECKLISTS PREVIOUSLY COMPLETED BY THE INSTALLER, BEFORE THE BEGINNING OF FUNCTIONAL TESTING.

D. FUNCTIONS/MODES REQUIRED TO BE TESTED, TEST METHODS:

1. THE FOLLOWING TESTING REQUIREMENTS ARE IN ADDITION TO AND DO NOT REPLACE ANY TESTING REQUIREMENTS ELSEWHERE IN THIS SPECIFICATION.

FUNCTION/MODE	TEST METHOD MANUAL, MONITORING, EITHER OR BOTH[2]	REQUIRED SEASONAL TEST[1]
GENERAL 1. TEST EACH SEQUENCE IN THE SEQUENCE OF OPERATIONS, AND OTHER SIGNIFICANT MODES AND SEQUENCES NOT MENTIONED; INCLUDING STARTUP, WARM-UP, SHUTDOWN, UNOCCUPIED & MANUAL MODES AND POWER FAILURE AND RESTORATION. TEST FUNCTIONALITY OF THIS PIECE OF EQUIPMENT OR SYSTEM IN ALL CONTROL STRATEGIES OR INTERLOCKS THAT IT IS ASSOCIATED	MANUAL	

FUNCTION/MODE	TEST METHOD MANUAL, MONITORING, EITHER OR BOTH[2]	REQUIRED SEASONAL TEST[1]
WITH, INCLUDING ALL DAMPER, VALVE AND FAN FUNCTIONS.		
IN ADDITION TO, OR AS PART OF (1) ABOVE, THE FOLLOWING MODES OR TESTS ARE REQUIRED:		
2. SENSOR ACTIVATOR CALIBRATION CHECKS ON: SAT, ZONE AIR TEMPERATURE DAMPER POSITION AND OTHER RANDOM CHECKS (EMS READOUT AGAINST VISUAL OR HAND-HELD CALIBRATED INSTRUMENT MUST BE WITHIN 0.5°F FOR TEMPS. OR WITHIN A TOLERANCE EQUAL TO 10% OF STATIC PRESSURE SET POINT, WITH AN INCLINED MANOMETER)	MANUAL	
3. DEVICE AND ACTUATOR CALIBRATION AND STROKE CHECKS FOR HEATING COIL VALVE AND DAMPERS	MANUAL	
4. FOR THE TU'S TESTED, CHECK THE PREFUNCTIONAL CHECKLIST ITEMS.	OBSERVATION	
5. VERIFY CONTROL PARAMETERS AND SET POINTS TO BE REASONABLE AND APPROPRIATE BY REVIEWING THE FULL PROGRAM OF 5% OF ALL THE TU'S WITH EACH OTHER FOR CONSISTENCY. VERIFY THE MAX. AND MIN. CFM SET POINTS OF ALL TESTED TU'S AGAINST THE CONTROL DRAWING AND TAB VALUES. VERIFY OTHER TU PROGRAMMING PARAMETERS SUCH AS K-FACTORS, DEAD BANDS, SET POINTS, STROKE TIMES, ETC.	OBSERVATION	
6. VERIFY PROPER OPERATION OF VALVE IN BOTH COOLING AND HEATING MODES UNDER OCCUPIED AND UNOCCUPIED CONDITIONS.	BOTH	BOTH
7. VERIFY NO HUNTING OR SIGNIFICANT OVERSHOOT BY VALVES AND DAMPERS.	EITHER	
8. VERIFY BY MEASUREMENT, CCV & HCV POSITIVE SHUTOFF (NO LEAK-THRU)	MANUAL	
9. ALL ALARMS (FAN STATUS, LOW LIMITS, ETC.)	MANUAL	
10. VERIFY THAT TU IS MAINTAINING SPACE SET POINT TEMPERATURES AND FANS ARE BEING CYCLED AS SPECIFIED	MONITORING	BOTH DESIGN
11. TREND ALL TEMPERATURE, PRESSURE, SPEED AND CONTROL POINTS FROM THE START OF FUNCTIONAL PERFORMANCE TESTING UNTIL POST CONSTRUCTION PHASE IS COMPLETE.	MONITORING	BOTH

E. SPECIAL PROCEDURES (OTHER EQUIPMENT TO TEST WITH, ETC.; REFERENCE TO FUNCTION ID): NONE

F. ACCEPTANCE CRITERIA (REFERENCED BY FUNCTION OR MODE ID):

1. FOR THE CONDITIONS, SEQUENCES AND MODES TESTED, THE TU, INTEGRAL COMPONENTS AND RELATED EQUIPMENT RESPOND TO VARYING LOADS AND CHANGING CONDITIONS AND PARAMETERS APPROPRIATELY AS EXPECTED, AS SPECIFIED AND ACCORDING TO ACCEPTABLE OPERATING PRACTICE.
2. SPACE TEMPERATURE DURING OCCUPIED MODES SHALL AVERAGE WITHIN +/- 1°F OF SET POINT AND ALWAYS REMAIN WITHIN 1°F OF THE ENDS OF THE DEAD BAND WITHOUT EXCESSIVE HUNTING OF THE COIL VALVE OR COMPLAINTS OF DRAFTS OR STUFFINESS FROM OCCUPANTS.

G. SAMPLING STRATEGY FOR IDENTICAL:

1. UNITS OF THE SAME TYPE AND FUNCTION, BUT DIFFERENT IN SIZE, ARE CONSIDERED IDENTICAL FOR SAMPLING PURPOSES.
2. TESTING:

a. RANDOMLY TEST AT LEAST 25% OF EACH GROUP OF IDENTICAL EQUIPMENT (THE 1ST SAMPLE). IN NO CASE TEST LESS THAN THREE UNITS IN EACH GROUP. IF 10% OF THE UNITS IN THE FIRST SAMPLE FAIL THE FUNCTIONAL PERFORMANCE TESTS, TEST ANOTHER 10% OF THE GROUP (THE 2ND SAMPLE). IF 10% OF THE UNITS IN THE 2ND SAMPLE FAIL, TEST ALL REMAINING UNITS IN THE WHOLE GROUP, FULLY AT THE CONTRACTOR'S EXPENSE. THIS SAMPLING APPLIES TO THE TESTING SUBSECTIONS. THAT IS, IF CALIBRATION IS OFF ON MORE THAN 10% OF THE TESTED PIECE OF EQUIPMENT, THEN ANOTHER SAMPLE SHALL HAVE CALIBRATIONS CHECKED, BUT NOT ALL OTHER TESTS NEED TO BE DONE ON THE SECOND SAMPLE.

3. MONITORING:
   a. TWENTY FIVE PERCENT OF THE TOTAL NUMBER OF ZONES IN THE BUILDING, CHOSEN BY THE OWNER, SHALL BE MONITORED. WITHIN THIS 25%, SHALL BE INCLUDED A DISTRIBUTION OF ALL AIR HANDLERS, ZONES EXPECTED TO HAVE THE GREATEST HEATING AND COOLING DEMAND, PERIMETER AND CORE ZONES AND ZONES IDENTIFIED FROM THE COMMISSIONING PROCESS THAT HAVE EXHIBITED POTENTIAL PROBLEMS.

END OF TERMINAL UNITS (FCU, FPT, VAV, CUH, UH)

3.15 PACKAGED DX SPLIT SYSTEM AIR CONDITIONING OR HEAT PUMP

A. PARTIES RESPONSIBLE TO EXECUTE FUNCTIONAL TEST:

1. CONTROLS CONTRACTOR: OPERATE THE CONTROLS TO ACTIVATE THE EQUIPMENT.
2. CA: TO WITNESS AND DOCUMENT TESTING.
3. TAB CONTRACTOR TO VERIFY AIRFLOWS.
4. UNIT MANUFACTURER'S REPRESENTATIVE.

B. INTEGRAL COMPONENTS OR RELATED EQUIPMENT BEING TESTED:

1. PREFUNCTIONAL TESTS MUST BE COMPLETE FOR ALL OF THE COMPONENTS LISTED BELOW PRIOR TO PERFORMING THIS FUNCTIONAL TEST.
   a. UNIT (FANS, COILS, CONDENSER, COMPRESSORS, DUCTS, VFD)

C. PREREQUISITES:

1. THE APPLICABLE PREREQUISITE CHECKLIST ITEMS LISTED IN THE PART 1 OF THIS SECTION AND PARAGRAPH B ABOVE SHALL BE LISTED ON EACH FUNCTIONAL TEST FORM AND CHECKED OFF PRIOR TO FUNCTIONAL TESTING. THE COMMISSIONING AGENT WILL ALSO SPOT-CHECK MISC. ITEMS AND CALIBRATIONS ON THE PREFUNCTIONAL CHECKLISTS PREVIOUSLY COMPLETED BY THE INSTALLER, BEFORE THE BEGINNING OF FUNCTIONAL TESTING.

D. FUNCTIONS/MODES REQUIRED TO BE TESTED, TEST METHODS:

1. THE FOLLOWING TESTING REQUIREMENTS ARE IN ADDITION TO AND DO NOT REPLACE ANY TESTING REQUIREMENTS ELSEWHERE IN THIS SPECIFICATION.

FUNCTION / MODE	TEST METHOD MANUAL, MONITORING, EITHER OR BOTH[2]	REQUIRED SEASONAL TEST[1]
GENERAL 1. TEST EACH SEQUENCE IN THE SEQUENCE OF OPERATIONS, AND OTHER SIGNIFICANT MODES AND SEQUENCES NOT MENTIONED; INCLUDING STARTUP, SHUTDOWN, UNOCCUPIED & MANUAL MODES AND POWER FAILURE. TEST FUNCTIONALITY OF THIS	MANUAL	

FUNCTION / MODE	TEST METHOD MANUAL, MONITORING, EITHER OR BOTH[2]	REQUIRED SEASONAL TEST[1]
PIECE OF EQUIPMENT OR SYSTEM IN ALL CONTROL STRATEGIES OR INTERLOCKS THAT IT IS ASSOCIATED WITH.		
IN ADDITION TO, OR AS PART OF (1) ABOVE, THE FOLLOWING MODES OR TESTS ARE REQUIRED:		
2. SUPPLY AIR, AND RESET TEMP. CONTROL FUNCTIONS	BOTH	
3. SF, RF AND EXHAUST FAN INTERLOCKS	EITHER	
4. COMPRESSOR UNLOADING & CONDENSER FAN STAGING FOR HEAD PRESSURE CONTROL	BOTH	
5. DAMPER INTERLOCKS AND CORRECT MODULATION IN ALL MODES, INCLUDING FIRE AND SMOKE DAMPERS	MANUAL	
6. TEMPERATURE DIFFERENCE ACROSS COOLING COILS	MANUAL	
7. VERIFY TAB REPORTED SF CFM WITH CONTROL SYSTEM READING	MANUAL	
8. ALL ALARMS (LOW LIMITS, HIGH STATIC, FREEZESTAT, ETC.)	MANUAL	
9. UNIT COOLING CAPACITY TESTS	MANUAL	DESIGN
10. SENSOR AND ACTUATOR CALIBRATION CHECKS ON: SAT, RAT, AND OTHER RANDOM CHECKS (EMS READOUT AGAINST HAND-HELD CALIBRATED INSTRUMENT MUST BE WITHIN 0.5°F FOR TEMPS. OR WITHIN A TOLERANCE EQUAL TO 10% OF STATIC PRESSURE SET POINT, WITH AN INCLINED MANOMETER)	MANUAL	
11. TREND ALL TEMPERATURE, PRESSURE, SPEED AND CONTROL POINTS FROM THE START OF FUNCTIONAL PERFORMANCE TESTING UNTIL POST CONSTRUCTION PHASE IS COMPLETE.	MONITORING	BOTH
12. VERIFY CONTROL STRATEGIES, SCHEDULES AND SET POINTS TO BE REASONABLE AND APPROPRIATE		

E. SPECIAL PROCEDURES (OTHER EQUIPMENT TO TEST WITH, ETC.; REFERENCE TO FUNCTION ID): NONE

F. ACCEPTANCE CRITERIA (REFERENCED BY FUNCTION OR MODE ID):

1. FOR THE CONDITIONS, SEQUENCES AND MODES TESTED, THE SYSTEM, INTEGRAL COMPONENTS AND RELATED EQUIPMENT RESPOND TO VARYING LOADS AND CHANGING CONDITIONS AND PARAMETERS APPROPRIATELY AS EXPECTED, AS SPECIFIED AND ACCORDING TO ACCEPTABLE OPERATING PRACTICE.

G. SAMPLING STRATEGY: TEST ALL UNITS.

END OF PACKAGED DX SPLIT SYSTEM AIR CONDITIONING OR HEAT PUMP

3.16 EXHAUST FANS

A. PARTIES RESPONSIBLE TO EXECUTE FUNCTIONAL TEST

1. CONTROLS CONTRACTOR: OPERATE THE CONTROLS TO ACTIVATE THE EQUIPMENT.
2. CA: TO WITNESS AND DOCUMENT TESTING.
3. TAB CONTRACTOR TO VERIFY AIRFLOWS.
4. MECHANICAL CONTRACTOR TO MAKE ANY ADJUSTMENTS.

B. INTEGRAL COMPONENTS OR RELATED EQUIPMENT BEING TESTED: PREFUNCTIONAL CHECKLISTS MUST BE COMPLETE FOR ALL OF THE COMPONENTS LISTED BELOW PRIOR TO PERFORMING THIS FUNCTIONAL TEST.

1. CONTROLS
2. TERMINAL EQUIPMENT

C. PREREQUISITES: THE APPLICABLE PREREQUISITE CHECKLIST ITEMS SHALL BE SIGNED OFF PRIOR TO FUNCTIONAL TESTING. THE COMMISSIONING AGENT MAY SPOT-CHECK MISC. ITEMS AND CALIBRATIONS ON THE PREFUNCTIONAL CHECKLISTS BEFORE THE BEGINNING OF FUNCTIONAL TESTING.

D. FUNCTIONS/MODES REQUIRED TO BE TESTED, TEST METHODS:

FUNCTION/MODE	TEST METHOD	SEASONAL TEST
GENERAL 1. TEST EACH SEQUENCE IN THE SEQUENCE OF OPERATIONS, AND OTHER SIGNIFICANT MODES AND SEQUENCES NOT MENTIONED; INCLUDING STARTUP, SHUTDOWN, UNOCCUPIED & MANUAL MODES AND POWER FAILURE. TEST FUNCTIONALITY OF THIS PIECE OF EQUIPMENT OR SYSTEM IN ALL CONTROL STRATEGIES OR INTERLOCKS THAT IT IS ASSOCIATED WITH.	MANUAL	
2. VERIFY SCHEDULES AND SET POINTS TO BE REASONABLE AND APPROPRIATE		
3. FUNCTION AT FIRE ALARM (OFF, DEPRESSURIZATION, ETC.)	MANUAL	
4. CHECK TAB REPORT RECORD OF SOUND POWER LEVEL TESTS AND SPACE PRESSURES AND COMPARE TO SPECIFICATIONS	REVIEW	
5. SENSOR CALIBRATION CHECKS ON ANY CONTROLLING TEMPERATURE OR PRESSURE SENSOR	MANUAL	

E. SPECIAL PROCEDURES (OTHER EQUIPMENT TO TEST WITH, ETC.; REFERENCE TO FUNCTION ID)

1. NONE.

F. ACCEPTANCE CRITERIA (REFERENCED BY FUNCTION OR MODE ID)

1. FOR THE CONDITIONS, SEQUENCES AND MODES TESTED, THE FANS, INTEGRAL COMPONENTS AND RELATED EQUIPMENT RESPOND TO CHANGING CONDITIONS AND PARAMETERS APPROPRIATELY AS EXPECTED, AS SPECIFIED AND ACCORDING TO ACCEPTABLE OPERATING PRACTICE.

END OF EXHAUST FANS

3.17 BUILDING AUTOMATION SYSTEM (BAS)

A. PARTIES RESPONSIBLE TO EXECUTE FUNCTIONAL TEST:

1. CONTROLS CONTRACTOR: OPERATE THE CONTROLS TO ACTIVATE THE EQUIPMENT.
2. CA: TO WITNESS AND DOCUMENT TESTING.

B. INTEGRAL COMPONENTS OR RELATED EQUIPMENT BEING TESTED: PREFUNCTIONAL TESTS MUST BE COMPLETE FOR ALL OF THE COMPONENTS LISTED BELOW PRIOR TO PERFORMING THIS FUNCTIONAL TEST.

1. BUILDING AUTOMATION SYSTEM
2. ALL PREFUNCTIONAL CHECKLISTS OF CONTROLLED EQUIPMENT

C. PREREQUISITES:

1. THE APPLICABLE PREREQUISITE CHECKLIST ITEMS LISTED IN THE PART 1 OF THIS SECTION AND PARAGRAPH B ABOVE SHALL BE LISTED ON EACH FUNCTIONAL TEST FORM AND CHECKED OFF PRIOR TO FUNCTIONAL TESTING. THE COMMISSIONING AGENT WILL ALSO SPOT-CHECK MISC. ITEMS AND CALIBRATIONS ON THE PREFUNCTIONAL CHECKLISTS PREVIOUSLY COMPLETED BY THE INSTALLER, BEFORE THE BEGINNING OF FUNCTIONAL TESTING.

D. A SIGNIFICANT PART OF THE BAS FUNCTIONAL TESTING REQUIREMENTS IS THE SUCCESSFUL COMPLETION OF THE FUNCTIONAL TESTS OF EQUIPMENT THE BAS CONTROLS OR INTERLOCKS WITH. UNCOMPLETED EQUIPMENT FUNCTIONAL TESTS OR OUTSTANDING DEFICIENCIES IN THOSE TESTS LEND THE REQUIRED BAS FUNCTIONAL TESTING INCOMPLETE.

E. INTEGRAL OR STAND-ALONE CONTROLS ARE FUNCTIONALLY TESTED WITH THE EQUIPMENT THEY ARE ATTACHED TO, INCLUDING ANY INTERLOCKS WITH OTHER EQUIPMENT OR SYSTEMS AND THUS ARE NOT COVERED UNDER THE BAS TESTING REQUIREMENTS, EXCEPT FOR ANY INTEGRATED FUNCTIONS OR INTERLOCKS LISTED BELOW.

F. IN ADDITION TO THE CONTROLLED EQUIPMENT TESTING, THE FOLLOWING TESTS ARE REQUIRED FOR THE BAS, WHERE FEATURES HAVE BEEN SPECIFIED. THE FOLLOWING TESTING REQUIREMENTS ARE IN ADDITION TO AND DO NOT REPLACE ANY TESTING REQUIREMENTS ELSEWHERE IN THE SPECIFICATIONS.

FUNCTION/MODE	TEST METHOD MANUAL (DEMONSTRATION), MONITORING, EITHER OR BOTH
MISC. FUNCTIONS	
1. ALL SPECIFIED FUNCTIONS AND FEATURES ARE SET UP, DEBUGGED AND FULLY OPERABLE	VERBAL DISCUSSION OF FEATURES
2. POWER FAILURE AND BATTERY BACKUP AND POWER-UP RESTART FUNCTIONS	DEMONSTRATION
3. SPECIFIED TRENDING AND GRAPHING FEATURES DEMONSTRATION	SEE EQUIPMENT TRENDS
4. GLOBAL COMMANDS FEATURES	DEMONSTRATION
5. SECURITY AND ACCESS CODES	DEMONSTRATION
6. OCCUPANT OVER-RIDES (MANUAL, TELEPHONE, KEY, KEYPAD, ETC.)	DEMONSTRATION
7. O&M SCHEDULES AND ALARMS	DEMONSTRATION
8. SCHEDULING FEATURES FULLY FUNCTIONAL AND SETUP, INCLUDING HOLIDAYS	OBSERVATION IN TERMINAL SCREENS OR PRINTOUTS
9. INCLUDED FEATURES NOT SPECIFIED TO BE SETUP ARE INSTALLED (LIST)	DEMONSTRATION
10. DEMONSTRATE FUNCTIONALITY OF FIELD PANELS USING LOCAL OPERATOR KEYPADS AND LOCAL PORTS (PLUG-INS) USING PORTABLE COMPUTER/KEYPAD	DEMONSTRATION OF 100% OF PANELS AND 10% OF PORTS
11. ALL GRAPHIC SCREENS AND VALUE READOUTS COMPLETED	DEMONSTRATION
12. SET POINT CHANGING FEATURES AND FUNCTIONS	DONE DURING EQUIPMENT TESTING
13. COMMUNICATIONS TO REMOTE SITES	DEMONSTRATION
14. SENSOR CALIBRATIONS	SAMPLED DURING EQUIPMENT TESTS
15. FINAL AS-BUILTS OR REDLINES (PER SPEC) CONTROL DRAWINGS, FINAL POINTS LIST, PROGRAM CODE, SET POINTS, SCHEDULES, WARRANTIES, ETC. PER SPECS, SUBMITTED FOR O&MS.	OBSERVATION
16. VERIFY THAT POINTS THAT ARE MONITORED ONLY, HAVING NO CONTROL FUNCTION, ARE CHECKED FOR PROPER REPORTING TO BAS.	OBSERVATION
17. OPTIONAL START/STOP ROUTINE.	
18. FINAL ROOM NUMBERS PROGRAMMED INTO SYSTEM.	

FUNCTION/MODE	TEST METHOD MANUAL (DEMONSTRATION), MONITORING, EITHER OR BOTH
19. WORCESTER STANDARD POINT NAMING CONVENTIONS USED.	
INTEGRATED TESTS	
20. FIRE ALARM INTERLOCKS AND RESPONSE	DEMONSTRATION
21. DEMAND LIMITING (INCLUDING OVER-RIDE OF LIMITING)	MONITORING
22. SEQUENTIAL STAGING ON OF EQUIPMENT	EITHER
23. ALL CONTROL STRATEGIES AND SEQUENCES NOT TESTED DURING CONTROLLED EQUIPMENT TESTING	EITHER
24. OTHER INTEGRATED TESTS SPECIFIED IN THE CONTRACT DOCUMENTS	
25. EMERGENCY POWER OPERATION AND RETURN TO NORMAL POWER.	
26. FIRE PROTECTION AND SUPPRESSION SYSTEMS	DEMONSTRATION

G. SPECIAL PROCEDURES (OTHER EQUIPMENT TO TEST WITH, ETC.; REFERENCE TO FUNCTION ID): NONE

H. ACCEPTANCE CRITERIA (REFERENCED BY FUNCTION OR MODE ID):

1. FOR THE CONDITIONS, SEQUENCES AND MODES TESTED, THE BAS, INTEGRAL COMPONENTS AND RELATED EQUIPMENT RESPOND TO CHANGING CONDITIONS AND PARAMETERS APPROPRIATELY AS EXPECTED, AS SPECIFIED AND ACCORDING TO ACCEPTABLE OPERATING PRACTICE.

END OF BUILDING AUTOMATION SYSTEM (BAS)

3.18 TEST AND BALANCE WORK (TAB)

A. PARTIES RESPONSIBLE TO EXECUTE FUNCTIONAL TEST:

1. TAB CONTRACTOR: PERFORM CHECKS USING TEST INSTRUMENTS.
2. CONTROLS CONTRACTOR: OPERATE THE CONTROLS TO ACTIVATE THE EQUIPMENT.
3. CA: TO WITNESS AND DOCUMENT TESTING.

B. INTEGRAL COMPONENTS OR RELATED EQUIPMENT BEING TESTED: PREFUNCTIONAL TESTS MUST BE COMPLETE FOR ALL OF THE COMPONENTS LISTED BELOW PRIOR TO PERFORMING THIS FUNCTIONAL TEST.

1. TAB WATER-SIDE
2. TAB AIR-SIDE
3. TAB EQUIPMENT AND SYSTEMS
4. TAB ELECTRICAL

C. PREREQUISITES

1. THE APPLICABLE PREREQUISITE CHECKLIST ITEMS LISTED IN THE BEGINNING OF THIS SECTION SHALL BE LISTED ON EACH FUNCTIONAL TEST FORM AND CHECKED OFF PRIOR TO FUNCTIONAL TESTING. THE COMMISSIONING AGENT WILL ALSO SPOT-CHECK MISC. ITEMS AND CALIBRATIONS ON THE PREFUNCTIONAL CHECKLISTS PREVIOUSLY COMPLETED BY THE INSTALLER, BEFORE THE BEGINNING OF FUNCTIONAL TESTING.

D. PURPOSE:

1. THE PURPOSE OF THIS TEST IS TO SPOT CHECK THE TAB WORK TO VERIFY THAT IT WAS DONE IN ACCORDANCE WITH THE CONTRACT DOCUMENTS AND ACCEPTABLE PRACTICE AND THAT THE TAB REPORT IS ACCURATE.

E. THE FOLLOWING TESTS AND CHECKS WILL BE CONDUCTED. THE FOLLOWING TESTING REQUIREMENTS ARE IN ADDITION TO AND DO NOT REPLACE ANY TESTING REQUIREMENTS ELSEWHERE IN THIS SPECIFICATION.

TEST OR CHECK	TEST METHOD	REQUIRED SEASONAL TEST[3]
1. A RANDOM SAMPLE OF UP TO 5 % THE TAB REPORT DATA SHALL BE SELECTED FOR VERIFICATION (AIR VELOCITY, AIR OR WATER FLOW RATE, PRESSURE DIFFERENTIAL, ELECTRICAL OR SOUND MEASUREMENT, ETC.). THE ORIGINAL TAB CONTRACTOR WILL EXECUTE THE CHECKS, WITNESSED BY THE COMMISSIONING AUTHORITY. THE TAB CONTRACTOR WILL USE THE SAME TEST INSTRUMENTS AS USED IN THE ORIGINAL TAB WORK. A FAILURE[1] OF MORE THAN 10% OF THE SELECTED ITEMS OF A GIVEN SYSTEM[2] SHALL RESULT IN THE FAILURE OF ACCEPTANCE OF THE SYSTEM TAB REPORT AND THE TAB CONTRACTOR SHALL BE RESPONSIBLE TO REBALANCE THE SYSTEM, PROVIDE A NEW SYSTEM TAB REPORT AND REPEAT RANDOM VERIFICATIONS OF THE NEW TAB REPORT. THE RANDOM TESTING WILL INCLUDE THE VERIFICATION OF MINIMUM OUTDOOR AIR INTAKE FLOWS AT MINIMUM, MAXIMUM AND INTERMEDIATE TOTAL AIRFLOW RATES FOR 100% OF THE AIR HANDLERS. OTHER SELECTED DATA TO BE VERIFIED WILL BE MADE KNOWN UPON DAY OF TESTING.	DEMONSTRATION	
2. VERIFY THAT FINAL SETTINGS OF ALL VALVES, SPLITTERS, DAMPERS AND OTHER ADJUSTMENT DEVICES HAVE BEEN PERMANENTLY MARKED BY THE TAB CONTRACTOR.	DEMONSTRATION	
3. VERIFICATION THAT THE AIR SYSTEM IS BEING CONTROLLED TO THE LOWEST POSSIBLE STATIC PRESSURE WHILE STILL MEETING DESIGN LOADS, LESS DIVERSITY. THIS SHALL INCLUDE A REVIEW OF TAB METHODS, CONTROL SET POINTS ESTABLISHED BY TAB AND A PHYSICAL VERIFICATION OF AT LEAST ONE LEG FROM FAN TO DIFFUSER HAVING ALL BALANCING DAMPERS WIDE OPEN AND THAT DURING FULL COOLING OF ALL TUS TAKING OFF DOWNSTREAM OF THE STATIC PRESSURE SENSOR, THE TU ON THE CRITICAL LEG HAS ITS DAMPER 90% OR MORE OPEN.	DEMONSTRATION	
4. VERIFICATION THAT THE WATER SYSTEM IS BEING CONTROLLED TO THE LOWEST POSSIBLE PRESSURE WHILE STILL MEETING DESIGN LOADS, LESS DIVERSITY. THIS SHALL INCLUDE A REVIEW OF TAB METHODS, CONTROL SET POINTS ESTABLISHED BY TAB AND A PHYSICAL VERIFICATION OF AT LEAST ONE LEG FROM THE PUMP TO THE COIL HAVING ALL BALANCING VALVES WIDE OPEN AND THAT DURING FULL COOLING THE COOLING COIL VALVE OF THAT LEG IS 90% OR MORE OPEN.	DEMONSTRATION	

[1]FAILURE OF AN ITEM IS DEFINED AS FOLLOWS:
FOR AIRFLOW OF SUPPLY AND RETURN: A DEVIATION OF MORE THAN 10% OF INSTRUMENT READING

FOR MINIMUM OUTSIDE AIRFLOW: 20% OF INSTRUMENT READING (30% FOR READING AT INTERMEDIATE SUPPLY FLOW FOR INLET VANE OR VFD OSA COMPENSATION SYSTEM USING LINEAR PROPORTIONAL CONTROL)
FOR TEMPERATURES: A DEVIATION OF MORE THAN 1°F
FOR AIR AND WATER PRESSURES: A DEVIATION OF MORE THAN 10% OF FULL SCALE OF TEST INSTRUMENT READING
FOR SOUND PRESSURES: A DEVIATION OF MORE THAN 3 DECIBELS. (VARIATIONS IN BACKGROUND NOISE MUST BE CONSIDERED)

[2]EXAMPLES OF A "SYSTEM" ARE: THE AIR DISTRIBUTION SYSTEM SERVED BY ONE AIR HANDLER OR THE HYDRONIC HOT WATER SUPPLY SYSTEM SERVED BY A BOILER. SYSTEMS CAN BE DEFINED SMALLER IF INACCURACIES IN TAB WORK WITHIN THE SMALLER DEFINED SYSTEM WILL HAVE LITTLE OR NO IMPACT ON CONNECTED SYSTEMS.

[3]COOLING SEASON, HEATING SEASON OR BOTH. "DESIGN" MEANS WITHIN 5°OF SEASON DESIGN (ASHRAE 2 1/2%), OR 95% OF LOADING DESIGN. A BLANK CELL DENOTES NO SPECIAL SEASONAL TEST IS REQUIRED AND THAT TEST CAN BE EXECUTED DURING ANY SEASON, IF CONDITION SIMULATION IS APPROPRIATE.

F. SPECIAL PROCEDURES (OTHER EQUIPMENT TO TEST WITH, ETC.; REFERENCE TO FUNCTION ID): NONE

G. REQUIRED MONITORING: NONE

H. ACCEPTANCE CRITERIA (REFERENCED BY FUNCTION OR MODE ID): PROVIDED IN FOOTNOTE TO TEST TABLE ABOVE.

I. SAMPLING STRATEGY FOR IDENTICAL UNITS: DESCRIBED IN TEST TABLE ABOVE.

END OF TEST AND BALANCE WORK (TAB)

3.19 AIR HANDLING UNITS (RECIRCULATING AND 100% O.A.)

A. PARTIES RESPONSIBLE TO EXECUTE FUNCTIONAL TEST

1. CONTROLS CONTRACTOR: OPERATE THE CONTROLS TO ACTIVATE THE EQUIPMENT.
2. CA: TO WITNESS AND DOCUMENT TESTING.
3. TAB CONTRACTOR TO VERIFY AIR AND WATER FLOWS.
4. MECHANICAL CONTRACTOR TO FIX ANY PROBLEMS.
5. UNIT MANUFACTURER'S REPRESENTATIVE.

B. INTEGRAL COMPONENTS OR RELATED EQUIPMENT BEING TESTED: PREFUNCTIONAL TESTS MUST BE COMPLETE FOR ALL OF THE COMPONENTS LISTED BELOW PRIOR TO PERFORMING THIS FUNCTIONAL TEST.

1. CHILLED WATER SYSTEM TO COOLING SECTION
2. HOT WATER HEATING SYSTEM OR GAS TO UNIT HEATING SECTION

C. PREREQUISITES:

1. THE APPLICABLE PREREQUISITE CHECKLIST ITEMS LISTED IN THE PART 1 OF THIS SECTION AND PARAGRAPH B ABOVE SHALL BE LISTED ON EACH FUNCTIONAL TEST FORM AND CHECKED OFF PRIOR TO FUNCTIONAL TESTING. THE COMMISSIONING AGENT WILL ALSO SPOT-CHECK MISC. ITEMS AND CALIBRATIONS ON THE PREFUNCTIONAL CHECKLISTS PREVIOUSLY COMPLETED BY THE INSTALLER, BEFORE THE BEGINNING OF FUNCTIONAL TESTING.

D. FUNCTIONS/MODES REQUIRED TO BE TESTED, TEST METHODS :

1. THE FOLLOWING TESTING REQUIREMENTS ARE IN ADDITION TO AND DO NOT REPLACE ANY TESTING REQUIREMENTS ELSEWHERE IN THIS SPECIFICATION.

FUNCTION / MODE	TEST METHOD MANUAL, MONITORING, EITHER OR BOTH[2]	REQUIRED SEASONAL TEST[1]
GENERAL 1. TEST EACH SEQUENCE IN THE SEQUENCE OF OPERATIONS, AND OTHER SIGNIFICANT MODES AND SEQUENCES NOT MENTIONED; INCLUDING STARTUP, SHUTDOWN, UNOCCUPIED & MANUAL MODES AND POWER FAILURE. TEST FUNCTIONALITY OF THIS PIECE OF EQUIPMENT OR SYSTEM IN ALL CONTROL STRATEGIES OR INTERLOCKS THAT IT IS ASSOCIATED WITH.	MANUAL	
IN ADDITION TO, OR AS PART OF (1) ABOVE, THE FOLLOWING MODES OR TESTS ARE REQUIRED:		
2. HOT WATER COIL AND FACE AND BYPASS DAMPERS TEMPERATURE CONTROL FUNCTIONS	BOTH	HEATING
3. ECONOMIZER FUNCTIONS	BOTH	COOLING
4. SF, RF AND EXHAUST FAN INTERLOCKS	EITHER	
5. DAMPER INTERLOCKS AND CORRECT MODULATION IN ALL MODES, INCLUDING FIRE AND SMOKE DAMPERS AND CO_2 CONTROL	MANUAL	
6. TEMPERATURE DIFFERENCE ACROSS HEATING AND COOLING COILS	MANUAL	BOTH
7. SMOKE DETECTORS AND SMOKE EVAC CONTROL FROM FIRE ALARM CONTROL PANEL.	MANUAL	
8. VERIFY TAB REPORTED SF AND RF CFM WITH CONTROL SYSTEM READING	MANUAL	
9. ALL ALARMS (LOW LIMITS, HIGH STATIC, FREEZESTAT, ETC.)	MANUAL	
10. SUPPLY AND RETURN FANS STATIC PRESSURE AND VOLUME MATCHING CONTROL	MONITORING	DESIGN
11. SENSOR AND ACTUATOR CALIBRATION CHECKS ON: SAT, MAT, OSAT, CO_2, ECONOMIZER AND RA DAMPERS AND OTHER RANDOM CHECKS (EMS READOUT AGAINST HAND-HELD CALIBRATED INSTRUMENT MUST BE WITHIN 0.5°F FOR TEMPS. OR WITHIN A TOLERANCE EQUAL TO 10% OF STATIC PRESSURE SET POINT, WITH AN INCLINED MANOMETER)	MANUAL	
12. TREND ALL TEMPERATURE, PRESSURE, SPEED AND CONTROL POINTS FROM THE START OF FUNCTIONAL PERFORMANCE TESTING UNTIL ACCEPTANCE PHASE IS COMPLETE. PROVIDE CA WITH ALL REQUESTED DATA UNTIL APPROVED.	MONITORING	BOTH
13. VERIFY CONTROL STRATEGIES, SCHEDULES AND SET POINTS TO BE REASONABLE AND APPROPRIATE		

E. SPECIAL PROCEDURES (OTHER EQUIPMENT TO TEST WITH, ETC.; REFERENCE TO FUNCTION ID): NONE

F. ACCEPTANCE CRITERIA (REFERENCED BY FUNCTION OR MODE ID):

1. FOR THE CONDITIONS, SEQUENCES AND MODES TESTED, THE SYSTEM, INTEGRAL COMPONENTS AND RELATED EQUIPMENT RESPOND TO VARYING LOADS AND CHANGING CONDITIONS AND PARAMETERS APPROPRIATELY AS EXPECTED, AS SPECIFIED AND ACCORDING TO ACCEPTABLE OPERATING PRACTICE.

G. SAMPLING STRATEGY: TEST ALL UNITS.

END OF AIR HANDLING UNITS (RECIRCULATING AND 100% O.A.)

ELECTRICAL ((SAMPLE: TO BE MODIFIED BY DESIGNER TO SUIT PROJECT CONDITIONS))

3.20 EMERGENCY GENERATOR

A. PARTIES RESPONSIBLE TO EXECUTE FUNCTIONAL TEST

1. VENDOR SUPPORT REPRESENTATIVE
2. ELECTRICAL CONTRACTOR
3. CA: TO WITNESS AND DOCUMENT TESTING

B. INTEGRAL COMPONENTS OR RELATED EQUIPMENT BEING TESTED: PREFUNCTIONAL TEST COMPLETE?

1. GENERATOR MOTOR
2. GENERATOR COOLING SYSTEM
3. GENERATOR FUEL SYSTEM
4. PHASE ROTATION

C. PREREQUISITES:

1. THE APPLICABLE PREREQUISITE CHECKLIST ITEMS LISTED IN THE PART 1 OF THIS SECTION AND PARAGRAPH B ABOVE SHALL BE LISTED ON EACH FUNCTIONAL TEST FORM AND CHECKED OFF PRIOR TO FUNCTIONAL TESTING. THE COMMISSIONING AGENT WILL ALSO SPOT-CHECK MISC. ITEMS AND CALIBRATIONS ON THE PREFUNCTIONAL CHECKLISTS PREVIOUSLY COMPLETED BY THE INSTALLER, BEFORE THE BEGINNING OF FUNCTIONAL TESTING.

D. FUNCTIONS/MODES REQUIRED TO BE TESTED, TEST METHODS:

1. THE FOLLOWING TESTING REQUIREMENTS ARE IN ADDITION TO AND DO NOT REPLACE ANY TESTING REQUIREMENTS ELSEWHERE IN THIS SPECIFICATION.

FUNCTION/MODE	TEST METHOD MANUAL, MONITORING, EITHER OR BOTH	REQUIRED SEASONAL TEST[1]
GENERAL 1. TEST EACH SEQUENCE IN THE SEQUENCE OF OPERATIONS, AND OTHER SIGNIFICANT MODES AND SEQUENCES NOT MENTIONED; INCLUDING STARTUP, SHUTDOWN, REMOTE ANNUNCIATION. TEST FUNCTIONALITY OF THIS PIECE OF EQUIPMENT OR SYSTEM IN ALL CONTROL STRATEGIES OR INTERLOCKS WITH WHICH IT IS ASSOCIATED.	MANUAL	BOTH
2. STIMULATE POWER OUTAGE AND SUBSEQUENT AUTOMATIC TRANSFER SWITCH OPERATION(S)	MANUAL	
3. GENERATOR START CAPABILITY UPON SIGNAL FROM ATS UPON LOSS OF UTILITY POWER	MANUAL	
4. CHECK ALL ALARMS AND ANNUNCIATORS LOCAL AND REMOTE AND REMOTE	MANUAL	
5. DEMONSTRATE INTERIOR OF ENCLOSURE OPERATIONAL, I.E., LIGHTING, BATTERY CHARGERS, ETC.	MANUAL	
6. DEMONSTRATE PROPER FUNCTIONING OF GOVERNOR AND REGULATOR	MANUAL	
7. VERIFY OPERATION OF ALL MECHANICAL EQUIPMENT ELEVATORS AND FIRE PUMP FROM GENERATOR POWER AND RESTART UPON RE-ENERGIZING NORMAL POWER.		

[1]COOLING SEASON, HEATING SEASON OR BOTH. “DESIGN” MEANS WITHIN 5°OF SEASON DESIGN (ASHRAE 2 1/2%), OR 95% OF LOADING DESIGN. A BLANK CELL DENOTES NO SPECIAL SEASONAL TEST IS REQUIRED AND THAT TEST CAN BE EXECUTED DURING ANY SEASON, IF CONDITION SIMULATION IS APPROPRIATE.

E. ACCEPTANCE CRITERIA (REFERENCED BY FUNCTION OR MODE ID):

1. FOR THE CONDITIONS, SEQUENCES AND MODES TESTED, THE GENERATOR, INTEGRAL COMPONENTS AND RELATED EQUIPMENT RESPOND TO VARYING LOADS AND CHANGING CONDITIONS AND PARAMETERS APPROPRIATELY AS EXPECTED, AS SPECIFIED AND ACCORDING TO ACCEPTABLE OPERATING PRACTICE.

END OF EMERGENCY GENERATOR

3.21 EMERGENCY LIGHTING

A. PARTIES RESPONSIBLE TO EXECUTE FUNCTIONAL TEST:

1. ELECTRICAL CONTRACTOR
2. CA: TO WITNESS AND DOCUMENT TESTING

B. INTEGRAL COMPONENTS OR RELATED EQUIPMENT BEING TESTED: PREFUNCTIONAL TESTS MUST BE COMPLETE FOR ALL OF THE COMPONENTS LISTED BELOW PRIOR TO PERFORMING THIS FUNCTIONAL TEST.

1. EMERGENCY LIGHTING FIXTURES
2. EMERGENCY BYPASS RELAYS

C. PREREQUISITES:

1. THE APPLICABLE PREREQUISITE CHECKLIST ITEMS LISTED IN PART 1 OF THIS SECTION AND PARAGRAPH B ABOVE SHALL BE LISTED ON EACH FUNCTIONAL TEST FORM AND CHECKED OFF PRIOR TO FUNCTIONAL TESTING. THE COMMISSIONING AGENT WILL ALSO SPOT-CHECK MISC. ITEMS AND CALIBRATIONS ON THE PREFUNCTIONAL CHECKLISTS PREVIOUSLY COMPLETED BY THE INSTALLER, BEFORE THE BEGINNING OF FUNCTIONAL TESTING.

D. FUNCTIONS/MODES REQUIRED TO BE TESTED, TEST METHODS:

1. THE FOLLOWING TESTING REQUIREMENTS ARE IN ADDITION TO AND DO NOT REPLACE ANY TESTING REQUIREMENTS ELSEWHERE IN THIS SPECIFICATION.

FUNCTION / MODE	TEST METHOD MANUAL, MONITORING, EITHER OR BOTH	REQUIRED SEASONAL TEST
GENERAL 1. TEST ALL MANUAL CONTROLS INDIVIDUALLY.	MANUAL	
2. DEMONSTRATE ALL AUTOMATIC FUNCTIONS USING MANUAL CONTROL OVERRIDES.		
3. DEMONSTRATE ALL INTERLOCKING FUNCTIONS, I.E., SECURITY/FIRE ALARM.		

E. ACCEPTANCE CRITERIA

1. ACCEPTANCE IS ACHIEVED WHEN ALL FUNCTIONS OF THE SPECIFIED SYSTEM HAVE BEEN DEMONSTRATED.

F. SAMPLE STRATEGY FOR IDENTICAL UNITS: NO SAMPLING, TEST ALL.

END OF EMERGENCY LIGHTING

3.22 SHORT CIRCUIT TRIP

A. PARTIES RESPONSIBLE TO EXECUTE FUNCTIONAL TEST:

1. ELECTRICAL CONTRACTOR
2. CA: TO WITNESS AND DOCUMENT TESTING

B. INTEGRAL COMPONENTS OR RELATED EQUIPMENT BEING TESTED: PREFUNCTIONAL TESTS MUST BE COMPLETE FOR ALL OF THE COMPONENTS LISTED BELOW PRIOR TO PERFORMING THIS FUNCTIONAL TEST.

1. BREAKER TRIP SETTINGS FOR ALL ADJUSTABLE TRIP TYPE BREAKERS

C. PREREQUISITES:

1. THE APPLICABLE PREREQUISITE CHECKLIST ITEMS LISTED IN PART 1 OF THIS SECTION AND PARAGRAPH B ABOVE SHALL BE LISTED ON EACH FUNCTIONAL TEST FORM AND CHECKED OFF PRIOR TO FUNCTIONAL TESTING. THE COMMISSIONING AGENT WILL ALSO SPOT-CHECK MISC. ITEMS AND CALIBRATIONS ON THE PREFUNCTIONAL CHECKLISTS PREVIOUSLY COMPLETED BY THE INSTALLER, BEFORE THE BEGINNING OF FUNCTIONAL TESTING.

D. FUNCTIONS/MODES REQUIRED TO BE TESTED, TEST METHODS:

1. THE FOLLOWING TESTING REQUIREMENTS ARE IN ADDITION TO AND DO NOT REPLACE ANY TESTING REQUIREMENTS ELSEWHERE IN THIS SPECIFICATION.

FUNCTION/MODE	TEST METHOD MANUAL, MONITORING, EITHER OR BOTH	REQUIRED SEASONAL TEST
GENERAL 1. REVIEW BREAKER SETTINGS PER THE SHORT CIRCUIT PROTECTION STUDY.	MANUAL	

E. ACCEPTANCE CRITERIA (REFERENCED BY FUNCTION OR MODE ID):

1. SYSTEM IS IN COMPLIANCE WHEN TRIP SETTINGS ARE OBSERVED TO BE COORDINATED WITH REPORT RECOMMENDATIONS.

F. SAMPLING STRATEGY FOR IDENTICAL UNITS: NO SAMPLING, TEST ALL.

END OF SHORT CIRCUIT TRIP

3.23 LIGHTING CONTROL SYSTEM

A. PARTIES RESPONSIBLE TO EXECUTE FUNCTIONAL TEST:

1. VENDOR SUPPORT REPRESENTATIVE
2. ELECTRICAL CONTRACTOR
3. CA: TO WITNESS AND DOCUMENT TESTING

B. INTEGRAL COMPONENTS OR RELATED EQUIPMENT BEING TESTED: PREFUNCTIONAL TESTS MUST BE COMPLETE FOR ALL OF THE COMPONENTS LISTED BELOW PRIOR TO PERFORMING THIS FUNCTIONAL TEST.

1. HEAD END SYSTEM (PC)

2. RELAY PANELS
3. OCCUPANCY SENSORS
4. LOW VOLTAGE SWITCHES
5. DAYLIGHT SWITCHES AND OVERRIDE
6. SYSTEM SOFTWARE

C. PREREQUISITES:

1. THE APPLICABLE PREREQUISITE CHECKLIST ITEMS LISTED IN PART 1 OF THIS SECTION AND PARAGRAPH B ABOVE SHALL BE LISTED ON EACH FUNCTIONAL TEST FORM AND CHECKED OFF PRIOR TO FUNCTIONAL TESTING. THE COMMISSIONING AGENT WILL ALSO SPOT-CHECK MISC. ITEMS AND CALIBRATIONS ON THE PREFUNCTIONAL CHECKLISTS PREVIOUSLY COMPLETED BY THE INSTALLER, BEFORE THE BEGINNING OF FUNCTIONAL TESTING.

D. FUNCTIONS/MODES REQUIRED TO BE TESTED, TEST METHODS:

1. THE FOLLOWING TESTING REQUIREMENTS ARE IN ADDITION TO AND DO NOT REPLACE ANY TESTING REQUIREMENTS ELSEWHERE IN THIS SPECIFICATION.

FUNCTION/MODE	TEST METHOD MANUAL, MONITORING, EITHER OR BOTH	REQUIRED SEASONAL TEST
GENERAL 1. DEMONSTRATE ALL FUNCTIONS OF THE LIGHTING CONTROL/LOW VOLTAGE SWITCHING SYSTEM AND HEAD END EQUIPMENT.	MANUAL	

E. ACCEPTANCE CRITERIA (REFERENCED BY FUNCTION OR MODE ID):

1. ACCEPTANCE IS ACHIEVED WHEN ALL LIGHTING FUNCTIONS ARE SUCCESSFULLY DEMONSTRATED.

F. SAMPLING STRATEGY FOR IDENTICAL UNITS: NO SAMPLING, TEST ALL.

END OF LIGHTING CONTROL SYSTEM

3.24 AUTOMATIC TRANSFER SWITCH(ES)

A. PARTIES RESPONSIBLE TO EXECUTE FUNCTIONAL TEST:

1. VENDOR SUPPORT REPRESENTATIVE
2. ELECTRICAL CONTRACTOR
3. BUILDING INSPECTOR
4. CA: TO WITNESS AND DOCUMENT TESTING
5. BALANCING CONTRACTOR TO VERIFY FLOWS

B. INTEGRAL COMPONENTS OR RELATED EQUIPMENT BEING TESTED: PREFUNCTIONAL TESTS MUST BE COMPLETE FOR ALL OF THE COMPONENTS LISTED BELOW PRIOR TO PERFORMING THIS FUNCTIONAL TEST.

1. MANUAL AND AUTOMATIC OPERATION
2. FUNCTION ANNUNCIATION

C. PREREQUISITES:

1. THE APPLICABLE PREREQUISITE CHECKLIST ITEMS LISTED IN PART 1 OF THIS SECTION AND PARAGRAPH B ABOVE SHALL BE LISTED ON EACH FUNCTIONAL TEST FORM AND CHECKED OFF PRIOR TO FUNCTIONAL TESTING. THE COMMISSIONING AGENT WILL ALSO SPOT-CHECK MISC. ITEMS AND CALIBRATIONS ON THE PREFUNCTIONAL CHECKLISTS PREVIOUSLY COMPLETED BY THE INSTALLER, BEFORE THE BEGINNING OF FUNCTIONAL TESTING.

D. FUNCTIONS/MODES REQUIRED TO BE TESTED, TEST METHODS:

1. THE FOLLOWING TESTING REQUIREMENTS ARE IN ADDITION TO AND DO NOT REPLACE ANY TESTING REQUIREMENTS ELSEWHERE IN THIS SPECIFICATION.

FUNCTION/MODE	TEST METHOD MANUAL, MONITORING, EITHER OR BOTH	REQUIRED SEASONAL TEST
GENERAL 1. VERIFY INSTALLATION OF SWITCH.	MANUAL	
2. DEMONSTRATE COMPLIANCE WITH ELECTRICAL SEQUENCE OF OPERATION.		

E. ACCEPTANCE CRITERIA

1. ACCEPTANCE IS ACHIEVED WHEN ALL FUNCTIONS OF THE SPECIFIED SYSTEM HAVE BEEN DEMONSTRATED.

F. SAMPLE STRATEGY FOR IDENTICAL UNITS: NO SAMPLING, TEST ALL.

END OF AUTOMATIC TRANSFER SWITCH(ES)

3.25 RENEWABLE ENERGY SYSTEM

A. PARTIES RESPONSIBLE TO EXECUTE FUNCTIONAL TEST:

1. VENDOR SUPPORT REPRESENTATIVE
2. ELECTRICAL CONTRACTOR
3. CA: TO WITNESS AND DOCUMENT TESTING

B. INTEGRAL COMPONENTS OR RELATED EQUIPMENT BEING TESTED: PREFUNCTIONAL TESTS MUST BE COMPLETE FOR ALL OF THE COMPONENTS LISTED BELOW PRIOR TO PERFORMING THIS FUNCTIONAL TEST.

1. PV ARRAY
2. STATIC INVERTERS
3. CHARGE CONTROLLERS
4. METERING
5. BYPASS DIODES
6. DATA ACQUISITION SYSTEM (DAS)

C. PREREQUISITES:

1. THE APPLICABLE PREREQUISITE CHECKLIST ITEMS LISTED IN PART 1 OF THIS SECTION AND PARAGRAPH B ABOVE SHALL BE LISTED ON EACH FUNCTIONAL TEST FORM AND CHECKED OFF PRIOR TO FUNCTIONAL TESTING. THE COMMISSIONING AGENT WILL ALSO SPOT-CHECK MISC. ITEMS AND CALIBRATIONS ON THE PREFUNCTIONAL CHECKLISTS PREVIOUSLY COMPLETED BY THE INSTALLER, BEFORE THE BEGINNING OF FUNCTIONAL TESTING.

D. FUNCTIONS/MODES REQUIRED TO BE TESTED, TEST METHODS:

1. THE FOLLOWING TESTING REQUIREMENTS ARE IN ADDITION TO AND DO NOT REPLACE ANY TESTING REQUIREMENTS ELSEWHERE IN THIS SPECIFICATION.

FUNCTION/MODE	TEST METHOD MANUAL, MONITORING, EITHER OR BOTH	REQUIRED SEASONAL TEST
GENERAL 1. DEMONSTRATE ALL FUNCTIONS OF THE RENEWABLE ENERGY SYSTEM ACCORDING TO MANUFACTURER'S INSTRUCTIONS.	MANUAL	

E. SAMPLING STRATEGY FOR IDENTICAL UNITS: NO SAMPLING, TEST ALL.

END OF RENEWABLE ENERGY SYSTEMS

END OF SECTION

SECTION 024100

DEMOLITION

PART 1 - GENERAL

1.1 GENERAL PROVISIONS

A. ATTENTION IS DIRECTED TO THE CONTRACT AND GENERAL CONDITIONS AND ALL SECTIONS WITHIN DIVISION 01 - GENERAL REQUIREMENTS, WHICH ARE HEREBY MADE A PART OF THIS SECTION OF THE SPECIFICATIONS.

1.2 DESCRIPTION OF WORK

A. WORK INCLUDED:

1. DEMOLITION AND REMOVAL OF SELECTED PORTIONS OF BUILDINGS AND STRUCTURES AND AS REQUIRED FOR NEW WORK. REFER TO THE DRAWINGS FOR ADDITIONAL REQUIREMENTS.
2. DEMOLITION AND REMOVAL OF SELECTED SITE ELEMENTS AND AS REQUIRED FOR NEW WORK. REFER TO THE DRAWINGS FOR ADDITIONAL REQUIREMENTS.
3. SALVAGE OF EXISTING ITEMS TO BE REUSED OR TURNED OVER TO THE FACILITY.
4. REMOVAL AND LEGAL DISPOSAL OF DEMOLISHED MATERIALS OFF SITE. EXCEPT THOSE ITEMS SPECIFICALLY DESIGNATED TO BE RELOCATED, REUSED, OR TURNED OVER TO THE FACILITY, ALL EXISTING REMOVED MATERIALS, ITEMS, TRASH AND DEBRIS SHALL BECOME PROPERTY OF THE CONTRACTOR AND SHALL BE COMPLETELY REMOVED FROM THE SITE AND LEGALLY DISPOSED OF AT HER/HIS EXPENSE. SALVAGE VALUE BELONGS TO THE CONTRACTOR. ON-SITE SALE OF MATERIALS IS NOT PERMITTED.
5. MAINTENANCE, WATERING AND CARE OF TREES DESIGNATED TO REMAIN BY A CERTIFIED ARBORIST DURING THE CONSTRUCTION PERIOD.
6. DEMOLITION AND REMOVAL WORK SHALL PROPERLY PREPARE FOR ALTERATION WORK AND NEW CONSTRUCTION TO BE PROVIDED UNDER THE CONTRACT.
7. BLASTING REQUIREMENTS.
8. SCHEDULING AND SEQUENCING OPERATIONS WITHOUT INTERRUPTING UTILITIES SERVING OCCUPIED AREAS. IF INTERRUPTION IS REQUIRED, OBTAIN WRITTEN PERMISSION FROM THE UTILITY COMPANY AND THE DCAM PROJECT MANAGER. SCHEDULE INTERRUPTION WHEN THE LEAST AMOUNT OF INCONVENIENCE WILL RESULT.

B. ALTERNATES: NOT APPLICABLE.

C. ITEMS TO BE INSTALLED ONLY: NOT APPLICABLE.

D. ITEMS TO BE FURNISHED ONLY: NOT APPLICABLE.

E. RELATED WORK: THE FOLLOWING ITEMS ARE NOT INCLUDED IN THIS SECTION AND WILL BE PERFORMED UNDER THE DESIGNATED SECTIONS:

1. SECTION 015000 - TEMPORARY FACILITIES AND CONTROLS:
   a. MAINTENANCE OF ACCESS, CLEANING DURING CONSTRUCTION, DUST AND NOISE CONTROL.
2. SECTION 017419 - CONSTRUCTION WASTE MANAGEMENT AND DISPOSAL:
   a. WASTE MANAGEMENT AND RECYCLING.
3. SECTION 210001 - FIRE PROTECTION:
   a. DISCONNECTING, CAPPING AND OTHERWISE MAKING INACTIVE EXISTING MECHANICAL SERVICES IN AREAS WHERE DEMOLITION AND REMOVAL WORK IS

REQUIRED. MECHANICAL TRADESMEN WILL DISCONNECT, CAP, INACTIVATE AND LOWER TO FLOOR SUCH ITEMS WHERE REQUIRED TO BE REMOVED UNDER SECTION 210001 - FIRE PROTECTION. REMOVAL AND DISPOSAL OF SUCH MATERIALS SHALL BE THEN DONE UNDER THIS SECTION 024100 - DEMOLITION.

b. DISCONNECT AND REINSTALLATION OF FIRE PROTECTION EQUIPMENT TEMPORARILY INTERRUPTED DURING CONSTRUCTION.

4. SECTION 220001 - PLUMBING:
   a. DISCONNECTING, CAPPING AND OTHERWISE MAKING INACTIVE EXISTING MECHANICAL SERVICES IN AREAS WHERE DEMOLITION AND REMOVAL WORK IS REQUIRED. MECHANICAL TRADESMEN WILL DISCONNECT, CAP, INACTIVATE AND LOWER TO FLOOR SUCH ITEMS WHERE REQUIRED TO BE REMOVED UNDER SECTION 230001 - PLUMBING. REMOVAL AND DISPOSAL OF SUCH MATERIALS SHALL BE THEN DONE UNDER THIS SECTION 024100 - DEMOLITION.
   b. DISCONNECT AND REINSTALLATION OF PLUMBING EQUIPMENT TEMPORARILY INTERRUPTED DURING CONSTRUCTION.
5. SECTION 230001 - HEATING, VENTILATING AND AIR CONDITIONING:
   a. DISCONNECTING, CAPPING AND OTHERWISE MAKING INACTIVE EXISTING MECHANICAL SERVICES IN AREAS WHERE DEMOLITION AND REMOVAL WORK IS REQUIRED. MECHANICAL TRADESMEN WILL DISCONNECT, CAP, INACTIVATE AND LOWER TO FLOOR SUCH ITEMS WHERE REQUIRED TO BE REMOVED UNDER SECTION 230001 - HEATING, VENTILATING AND AIR CONDITIONING. REMOVAL AND DISPOSAL OF SUCH MATERIALS SHALL BE THEN DONE UNDER THIS SECTION 024100 - DEMOLITION.
   b. DISCONNECT AND REINSTALLATION OF HVAC EQUIPMENT TEMPORARILY INTERRUPTED DURING CONSTRUCTION.
6. SECTION 260001 - ELECTRICAL WORK:
   a. DISCONNECTING, CAPPING AND OTHERWISE MAKING INACTIVE EXISTING ELECTRICAL SERVICES IN AREAS WHERE DEMOLITION AND REMOVAL WORK IS REQUIRED. ELECTRICAL TRADESMEN WILL DISCONNECT, CAP, INACTIVATE AND LOWER TO FLOOR SUCH ITEMS WHERE REQUIRED TO BE REMOVED UNDER SECTION 260001 - ELECTRICAL WORK. REMOVAL AND DISPOSAL OF SUCH MATERIALS SHALL BE THEN DONE UNDER THIS SECTION 024100 - DEMOLITION.
   b. DISCONNECT AND REINSTALLATION OF ELECTRICAL EQUIPMENT TEMPORARILY INTERRUPTED DURING CONSTRUCTION.
7. SECTION 311000 – SITE CLEARING:
   a. EXCAVATING AND REMOVAL OF EXISTING PAVEMENT, SUB-SURFACE BUILDING AND UTILITY STRUCTURES AND LINES, APPURTENANCES, AND OTHER ELEMENTS INDICATED ON THE DRAWINGS.

1.3 DEFINITIONS

A. REMOVE: DETACH ITEMS FROM EXISTING CONSTRUCTION AND LEGALLY DISPOSE OF THEM OFF-SITE, UNLESS INDICATED TO BE REMOVED AND SALVAGED OR REMOVED AND REINSTALLED.

B. REMOVE AND SALVAGE: DETACH ITEMS FROM EXISTING CONSTRUCTION AND DELIVER THEM TO THE USER AGENCY READY FOR REUSE, AT A LOCATION DESIGNATED BY THE USER AGENCY. PROTECT FROM WEATHER UNTIL ACCEPTED BY USER AGENCY.

C. REMOVE AND REINSTALL: DETACH ITEMS FROM EXISTING CONSTRUCTION, PREPARE THEM FOR REUSE, AND REINSTALL THEM WHERE INDICATED. PROTECT FROM WEATHER UNTIL REINSTALLATION.

D. EXISTING TO REMAIN: EXISTING ITEMS OF CONSTRUCTION THAT ARE NOT TO BE REMOVED AND THAT ARE NOT OTHERWISE INDICATED TO BE REMOVED, REMOVED AND SALVAGED, OR REMOVED AND REINSTALLED.

1.4 MATERIALS OWNERSHIP

A. HISTORIC ITEMS, RELICS, AND SIMILAR OBJECTS INCLUDING, BUT NOT LIMITED TO, CORNERSTONES AND THEIR CONTENTS, COMMEMORATIVE PLAQUES, ANTIQUES, AND OTHER ITEMS OF INTEREST OR VALUE TO DCAM THAT MAY BE ENCOUNTERED DURING SELECTIVE DEMOLITION REMAIN PROPERTY OF THE COMMONWEALTH OR USER AGENCY AS APPLICABLE. CAREFULLY REMOVE EACH ITEM OR OBJECT IN A MANNER TO PREVENT DAMAGE AND DELIVER PROMPTLY TO A LOCATION ACCEPTABLE TO THE DCAM PROJECT MANGER.

1.5 SUBMITTALS

A. SCHEDULE OF SELECTIVE DEMOLITION ACTIVITIES: INDICATE THE FOLLOWING:

1. DETAILED SEQUENCE OF SELECTIVE DEMOLITION AND REMOVAL WORK, WITH EARLY AND LATE STARTING AND FINISHING DATES FOR EACH ACTIVITY. ENSURE USER AGENCY'S ON-SITE OPERATIONS ARE UNINTERRUPTED IF APPLICABLE.
2. INTERRUPTION OF UTILITY SERVICES. INDICATE HOW LONG UTILITY SERVICES WILL BE INTERRUPTED.
3. COORDINATION FOR SHUTOFF, CAPPING, AND CONTINUATION OF UTILITY SERVICES.
4. USE OF ELEVATOR AND STAIRS.
5. LOCATIONS OF PROPOSED DUST- AND NOISE-CONTROL TEMPORARY PARTITIONS AND MEANS OF EGRESS, INCLUDING FOR OTHER OCCUPANTS AFFECTED BY SELECTIVE DEMOLITION OPERATIONS.
6. COORDINATION OF USER AGENCY'S CONTINUING OCCUPANCY OF PORTIONS OF EXISTING BUILDING AND OF USER AGENCY'S PARTIAL OCCUPANCY OF COMPLETED WORK.
7. MEANS OF PROTECTION FOR ITEMS TO REMAIN AND ITEMS IN PATH OF WASTE REMOVAL FROM BUILDING.

B. INVENTORY: AFTER SELECTIVE DEMOLITION IS COMPLETE, SUBMIT A LIST OF ITEMS THAT HAVE BEEN REMOVED AND SALVAGED, AND TURNED OVER TO THE USER AGENCY.

C. PREDEMOLITION VIDEOTAPES: SHOW EXISTING CONDITIONS OF ADJOINING CONSTRUCTION AND SITE IMPROVEMENTS, INCLUDING FINISH SURFACES, THAT MIGHT BE MISCONSTRUED AS DAMAGE CAUSED BY SELECTIVE DEMOLITION OPERATIONS. COMPLY WITH DIVISION 01. SUBMIT BEFORE WORK BEGINS.

D. LANDFILL RECORDS: PROVIDE TRIP TICKETS (RECEIPTS) INDICATING RECEIPT AND ACCEPTANCE OF HAZARDOUS WASTES BY A LANDFILL FACILITY LICENSED TO ACCEPT HAZARDOUS WASTES.

1. COMPLY WITH SUBMITTAL REQUIREMENTS IN SECTION 017419 - CONSTRUCTION WASTE MANAGEMENT AND DISPOSAL.

1.6 QUALITY ASSURANCE

A. EXAMINATION OF EXISTING CONDITIONS: THE CONTRACTOR SHALL EXAMINE THE CONTRACT DRAWINGS FOR DEMOLITION AND REMOVAL REQUIREMENTS AND PROVISIONS FOR NEW WORK. VERIFY ALL EXISTING CONDITIONS AND DIMENSIONS BEFORE COMMENCING WORK. THE CONTRACTOR SHALL VISIT THE SITE AND EXAMINE THE EXISTING CONDITIONS AS HE FINDS THEM AND SHALL INFORM HERSELF/HIMSELF OF THE CHARACTER, EXTENT AND TYPE OF DEMOLITION AND REMOVAL WORK TO BE PERFORMED. SUBMIT ANY QUESTIONS REGARDING THE EXTENT AND CHARACTER OF THE DEMOLITION AND REMOVAL WORK IN THE MANNER AND WITHIN THE TIME PERIOD ESTABLISHED FOR RECEIPT OF SUCH QUESTIONS DURING THE BIDDING PERIOD.

B. DEMOLITION FIRM QUALIFICATIONS: AN EXPERIENCED FIRM THAT HAS SPECIALIZED IN DEMOLITION WORK SIMILAR IN MATERIAL AND EXTENT TO THAT INDICATED FOR THIS PROJECT.

C. REFRIGERANT RECOVERY TECHNICIAN QUALIFICATIONS: CERTIFIED BY AN EPA-APPROVED CERTIFICATION PROGRAM.

D. REGULATORY REQUIREMENTS: COMPLY WITH GOVERNING EPA NOTIFICATION REGULATIONS BEFORE BEGINNING SELECTIVE DEMOLITION. COMPLY WITH HAULING AND DISPOSAL REGULATIONS OF AUTHORITIES HAVING JURISDICTION.

E. STANDARDS: COMPLY WITH ANSI A10.6 AND NFPA 241.

F. PREDEMOLITION CONFERENCE: CONDUCT CONFERENCE AT PROJECT SITE TO COMPLY WITH REQUIREMENTS IN SECTION 013100 - PROJECT MANAGEMENT, COORDINATION AND COMMISSIONING. REVIEW METHODS AND PROCEDURES RELATED TO SELECTIVE DEMOLITION INCLUDING, BUT NOT LIMITED TO, THE FOLLOWING:

1. INSPECT AND DISCUSS CONDITION OF CONSTRUCTION TO BE SELECTIVELY DEMOLISHED.
2. REVIEW STRUCTURAL LOAD LIMITATIONS OF EXISTING STRUCTURE.
3. REVIEW AND FINALIZE SELECTIVE DEMOLITION SCHEDULE AND VERIFY AVAILABILITY OF MATERIALS, DEMOLITION PERSONNEL, EQUIPMENT, AND FACILITIES NEEDED TO MAKE PROGRESS AND AVOID DELAYS.
4. REVIEW REQUIREMENTS OF WORK PERFORMED BY OTHER TRADES THAT RELY ON SUBSTRATES EXPOSED BY SELECTIVE DEMOLITION OPERATIONS.
5. REVIEW AREAS WHERE EXISTING CONSTRUCTION IS TO REMAIN AND REQUIRES PROTECTION.

1.7 WARRANTY

A. EXISTING WARRANTIES: REMOVE, REPLACE, PATCH, AND REPAIR MATERIALS AND SURFACES CUT OR DAMAGED DURING SELECTIVE DEMOLITION, BY METHODS AND WITH MATERIALS SO AS NOT TO VOID EXISTING WARRANTIES.

1.8 BLASTING

A. BLASTING, WHEN ALLOWED IN THE CONTRACT, OR SUBSEQUENTLY APPROVED IN WRITING BY THE DCAM PROJECT MANAGER, SHALL BE PERFORMED IN ACCORDANCE WITH THE BOARD OF FIRE PREVENTION REGULATIONS 527 CMR 13.00 – EXPLOSIVES, SECTION 13.09 (LATEST EDITION). SECTION 13.09 SHALL BECOME AN INTEGRAL PART OF THESE SPECIFICATIONS. THE BLASTER THROUGH THE CONSTRUCTION MANAGER SHALL SUBMIT A BLASTING PLAN (A.K.A. BLAST DESIGN PLAN), PREPARED AND SEALED BY A REGISTERED PROFESSIONAL ENGINEER THAT INCLUDES CALCULATIONS OF OVER-PRESSURE AND DEBRIS HAZARDS. THE DCAM PROJECT MANAGER OR HER/HIS DESIGNEE AND THE CONSTRUCTION MANAGER ARE RESPONSIBLE FOR REVIEWING THE BLAST DESIGN PLAN BEFORE A CHARGE IS DETONATED. THE CONSTRUCTION MANAGER SHALL BE RESPONSIBLE FOR ALL DAMAGE CAUSED BY THE BLASTING OPERATIONS.
1. THE CONSTRUCTION MANAGER THROUGH THE SITE SUBCONTRACTOR SHALL SUPPLY THE DCAM PROJECT MANAGER WITH XUC (EXPLOSIVES USER CERTIFICATE) AND PROOF OF CURRENT LIABILITY INSURANCE AND BONDS REQUIRED BY MGL 148, PARAGRAPHS 19, 20 AND 20A PRIOR TO THE USE OF EXPLOSIVES.
2. WHEN BLASTING IS DONE WITHIN 250 FEET FROM THE CENTER OF THE BLAST SITE, OR A BUILDING, STRUCTURE, RAILWAY, OR HIGHWAY OR ANY OTHER INSTALLATION THAT COULD BE AFFECTED, THE BLASTER SHALL PROVIDE DCAM WITH A LIABILITY INSURANCE POLICY IN THE AMOUNT OF $ 5,000,000., NAMING DCAM AS ADDITIONAL INSURED.

3. THE CONSTRUCTION MANAGER SHALL ENGAGE THE SERVICES OF A THIRD PARTY TO PERFORM A PRE-BLAST AND POST-BLAST VIDEO SURVEY OF ALL STRUCTURES ABOVE AND BELOW GROUND, WITHIN THE 250 FEET RADIUS. THE VIDEO RECORDS SHALL BECOME THE PROPERTY OF DCAM.
4. THE BLASTING COMPANY AND THE BLASTER SHALL BE LICENSED FOR BLASTING OPERATIONS IN THE COMMONWEALTH OF MASSACHUSETTS. THE BLASTING COMPANY IS RESPONSIBLE FOR OBTAINING ALL PERMITS NECESSARY FOR BLASTING OPERATIONS.
5. THE BLASTER SHALL LIMIT THE SIZE OF EXPLOSIVE CHARGES TO THE SMALLEST AMOUNT POSSIBLE AND THE SMALLEST QUANTITY IN A DETONATION SEQUENCE. THE BLASTER SHALL PLACE A MINIMUM OF FOUR (4) FEET OF 3/8" CRUSHED STONE OVER THE BLAST ZONE AND THEN PLACE BLASTING MATS ON TOP OF THE CRUSHED STONE.
6. AS PART OF THE REVIEW OF THE BLAST DESIGN PLAN, THE DCAM PROJECT MANAGER OR HER/HIS DESIGNEE SHALL DESIGNATE AN EXPLORATORY AREA OF ROCK EXCAVATION TO WHICH THE BLASTER WILL CONFINE HIS INITIAL DRILLING AND BLASTING. NO ADDITIONAL DRILLING OR BLASTING WILL BE PERFORMED UNTIL THE EFFECTS OF THE BLASTING HAS BEEN COMPLETED AND THE ORIGINAL BLAST DESIGN PLAN HAS BEEN REAFFIRMED AND/OR REVISED IN WRITING.
7. APPROVAL OF THE BLAST DESIGN PLAN WILL NOT RELIEVE THE BLASTER AND/OR THE CONSTRUCTION MANAGER OF THEIR RESPONSIBILITIES IN CONNECTION WITH THE WORK, SAFETY AND DIRECT OR INDIRECT DAMAGES TO EXISTING OR NEW STRUCTURES.

B. THE DEPARTMENT OF ENVIRONMENTAL PROTECTION HAS IDENTIFIED "PERCHLORATE" AS A CONTAMINANT OF CONCERN. PERCHLORATE IS VERY SOLUBLE IN WATER AND IS EASILY LEACHED FROM THE GROUND SURFACE INTO THE GROUNDWATER. EXPLOSIVES WITH PERCHLORATE, OR INGREDIENTS THAT MAY PRODUCE PERCHLORATE RESIDUE, ARE PROHIBITED.

1. THE CONTRACTOR SHALL PROVIDE GROUND WATER MONITORING TEST WELLS AT INTERVALS OF 25 FEET ALONG PERIMETERS OF BLAST AREAS OR AS OTHERWISE DIRECTED BY THE DCAM PROJECT MANAGER. THE DCAM TESTING AGENCY SHALL TAKE GROUND WATER SAMPLES, PRIOR TO BLASTING AND AFTER BLASTING OPERATIONS ARE COMPLETED, UTILIZING THE MONITORING TEST WELLS.

PART 2 - PRODUCTS (NOT USED)

PART 3 - EXECUTION

3.1 EXAMINATION

A. VERIFY THAT UTILITIES HAVE BEEN DISCONNECTED AND CAPPED.

B. SURVEY EXISTING CONDITIONS AND CORRELATE WITH REQUIREMENTS INDICATED TO DETERMINE EXTENT OF SELECTIVE DEMOLITION REQUIRED.

C. INVENTORY AND RECORD THE CONDITION OF ITEMS TO BE REMOVED AND REINSTALLED AND ITEMS TO BE REMOVED AND SALVAGED.

D. WHEN UNANTICIPATED MECHANICAL, ELECTRICAL, OR STRUCTURAL ELEMENTS THAT CONFLICT WITH INTENDED FUNCTION OR DESIGN ARE ENCOUNTERED, INVESTIGATE AND MEASURE THE NATURE AND EXTENT OF CONFLICT. PROMPTLY SUBMIT A WRITTEN REPORT TO DESIGNER.

E. ENGAGE A PROFESSIONAL ENGINEER REGISTERED IN THE COMMONWEALTH OF MASSACHUSETTS TO SURVEY CONDITION OF BUILDING TO DETERMINE WHETHER REMOVING ANY ELEMENT MIGHT RESULT IN STRUCTURAL DEFICIENCY OR UNPLANNED COLLAPSE OF ANY

PORTION OF STRUCTURE OR ADJACENT STRUCTURES DURING SELECTIVE DEMOLITION OPERATIONS.

F. SURVEY OF EXISTING CONDITIONS: RECORD EXISTING CONDITIONS BY USE OF PRECONSTRUCTION VIDEOTAPES.

1. BEFORE SELECTIVE DEMOLITION OR REMOVAL OF EXISTING BUILDING ELEMENTS THAT WILL BE REPRODUCED OR DUPLICATED IN FINAL WORK, MAKE PERMANENT RECORD OF MEASUREMENTS, MATERIALS, AND CONSTRUCTION DETAILS REQUIRED TO MAKE EXACT REPRODUCTION.

G. PERFORM SURVEYS AS THE WORK PROGRESSES TO DETECT HAZARDS RESULTING FROM SELECTIVE DEMOLITION ACTIVITIES.

3.2 UTILITY SERVICES AND MECHANICAL/ELECTRICAL SYSTEMS

A. SERVICE/SYSTEM REQUIREMENTS: LOCATE, IDENTIFY, DISCONNECT, AND SEAL OR CAP OFF INDICATED UTILITY SERVICES AND MECHANICAL/ELECTRICAL SYSTEMS SERVING AREAS TO BE SELECTIVELY DEMOLISHED.

1. ARRANGE TO SHUT OFF INDICATED UTILITIES WITH UTILITY COMPANIES AND USER AGENCY.
2. IF SERVICES/SYSTEMS ARE REQUIRED TO BE REMOVED, RELOCATED, OR ABANDONED, BEFORE PROCEEDING WITH SELECTIVE DEMOLITION PROVIDE TEMPORARY SERVICES/SYSTEMS THAT BYPASS AREA OF SELECTIVE DEMOLITION AND THAT MAINTAIN CONTINUITY OF SERVICES/SYSTEMS TO OTHER PARTS OF BUILDING.
3. CUT OFF PIPE OR CONDUIT IN WALLS OR PARTITIONS TO BE REMOVED. CAP, VALVE, OR PLUG AND SEAL REMAINING PORTION OF PIPE OR CONDUIT AFTER BYPASSING. WHERE ENTIRE WALL IS TO BE REMOVED, EXISTING SERVICES/SYSTEMS MAY BE REMOVED WITH REMOVAL OF THE WALL.
4. PRIOR TO COMMENCING CUTTING WORK IN EXISTING SURFACES, TAKE ALL PRECAUTIONARY MEASURES TO ASSURE THAT MECHANICAL AND ELECTRICAL SERVICES TO THE PARTICULAR AREA HAVE BEEN MADE INACTIVE. COORDINATE WITH FIRE PROTECTION, PLUMBING, HVAC, AND ELECTRICAL SUBCONTRACTORS. ONLY LICENSED TRADESMEN OF THAT PARTICULAR TRADE SHALL DISCONNECT AND CAP EXISTING MECHANICAL AND ELECTRICAL ITEMS THAT ARE TO BE REMOVED, ABANDONED AND/OR RELOCATED.
5. IF, DURING THE PROCESS OF CUTTING WORK, EXISTING UTILITY LINES ARE ENCOUNTERED WHICH ARE NOT INDICATED ON THE DRAWINGS, REGARDLESS OF THEIR CONDITION, IMMEDIATELY REPORT SUCH ITEMS TO THE DESIGNER. DO NOT PROCEED WITH WORK IN SUCH AREAS UNTIL INSTRUCTIONS ARE ISSUED BY THE DESIGNER. CONTINUE WORK IN OTHER AREAS.

3.3 PREPARATION

A. SITE ACCESS AND TEMPORARY CONTROLS: CONDUCT SELECTIVE DEMOLITION AND DEBRIS-REMOVAL OPERATIONS TO ENSURE MINIMUM INTERFERENCE WITH ROADS, STREETS, WALKS, WALKWAYS, AND OTHER ADJACENT OCCUPIED AND USED FACILITIES.

1. COMPLY WITH REQUIREMENTS FOR ACCESS AND PROTECTION SPECIFIED IN SECTION 015000 - TEMPORARY FACILITIES AND CONTROLS.
2. MAINTAIN ADEQUATE PASSAGE TO AND FROM ALL EXITS AT ALL TIMES. BEFORE ANY WORK IS DONE WHICH SIGNIFICANTLY ALTERS ACCESS OR EGRESS PATTERNS, CONSULT WITH THE DESIGNER AND OBTAIN APPROVAL OF CODE REQUIRED EGRESS. UNDER NO CONDITION BLOCK OR INTERFERE WITH THE FREE FLOW OF PEOPLE AT LEGALLY REQUIRED EXITS, OR IN ANY WAY ALTER THE REQUIRED CONDITION OF SUCH EXITS.

B. TEMPORARY SHORING: PROVIDE AND MAINTAIN SHORING, BRACING, AND STRUCTURAL SUPPORTS AS REQUIRED TO PRESERVE STABILITY AND PREVENT MOVEMENT, SETTLEMENT, OR COLLAPSE OF CONSTRUCTION AND FINISHES TO REMAIN, AND TO PREVENT UNEXPECTED OR UNCONTROLLED MOVEMENT OR COLLAPSE OF CONSTRUCTION BEING DEMOLISHED.

1. STRENGTHEN OR ADD NEW SUPPORTS WHEN REQUIRED DURING PROGRESS OF SELECTIVE DEMOLITION.
2. REMOVE TEMPORARY SHORING, BRACING AND STRUCTURAL SUPPORTS WHEN NO LONGER REQUIRED.
3. POST WARNING SIGNS AND PLACE BARRICADES AS APPLICABLE DURING PLACEMENT AND REMOVAL OF TEMPORARY SHORING.

C. CONDUCT DEMOLITION OPERATIONS TO PREVENT INJURY TO PEOPLE AND DAMAGE TO ADJACENT BUILDINGS AND FACILITIES TO REMAIN. ENSURE SAFE PASSAGE OF PEOPLE AROUND DEMOLITION AREA(S).

1. ERECT TEMPORARY PROTECTION, SUCH AS WALKS, FENCES, RAILINGS, CANOPIES, AND COVERED PASSAGEWAYS, WHERE REQUIRED BY AUTHORITIES HAVING JURISDICTION. PROVIDE TEMPORARY BARRICADES AS REQUIRED TO LIMIT ACCESS TO DEMOLITION AREAS.
2. PROTECT EXISTING SITE IMPROVEMENTS, APPURTENANCES, AND LANDSCAPING TO REMAIN.

D. DRAIN, PURGE, OR OTHERWISE REMOVE, COLLECT, AND DISPOSE OF CHEMICALS, GASES, EXPLOSIVES, ACIDS, FLAMMABLES, OR OTHER DANGEROUS MATERIALS BEFORE PROCEEDING WITH DEMOLITION OPERATIONS.

3.4 SELECTIVE DEMOLITION, GENERAL

A. GENERAL: DEMOLISH AND REMOVE EXISTING CONSTRUCTION ONLY TO THE EXTENT REQUIRED BY NEW CONSTRUCTION AND AS INDICATED. USE METHODS REQUIRED TO COMPLETE THE WORK WITHIN LIMITATIONS OF GOVERNING REGULATIONS AND AS FOLLOWS:

1. PROCEED WITH SELECTIVE DEMOLITION SYSTEMATICALLY, FROM HIGHER TO LOWER LEVEL. COMPLETE SELECTIVE DEMOLITION OPERATIONS ABOVE EACH FLOOR OR TIER BEFORE DISTURBING SUPPORTING MEMBERS ON THE NEXT LOWER LEVEL.
2. NEATLY CUT OPENINGS AND HOLES PLUMB, SQUARE, AND TRUE TO DIMENSIONS REQUIRED. USE CUTTING METHODS LEAST LIKELY TO DAMAGE CONSTRUCTION TO REMAIN OR ADJOINING CONSTRUCTION. USE HAND TOOLS OR SMALL POWER TOOLS DESIGNED FOR SAWING OR GRINDING, NOT HAMMERING AND CHOPPING, TO MINIMIZE DISTURBANCE OF ADJACENT SURFACES. TEMPORARILY COVER OPENINGS TO REMAIN.
3. CUT OR DRILL FROM THE EXPOSED OR FINISHED SIDE INTO CONCEALED SURFACES TO AVOID MARRING EXISTING FINISHED SURFACES.
4. DO NOT USE CUTTING TORCHES UNTIL WORK AREA IS CLEARED OF FLAMMABLE MATERIALS. AT CONCEALED SPACES, SUCH AS DUCT AND PIPE INTERIORS, VERIFY CONDITION AND CONTENTS OF HIDDEN SPACE BEFORE STARTING FLAME-CUTTING OPERATIONS. MAINTAIN FIRE WATCH AND PORTABLE FIRE-SUPPRESSION DEVICES DURING AND AFTER FLAME-CUTTING OPERATIONS.
5. MAINTAIN ADEQUATE VENTILATION WHEN USING CUTTING TORCHES.
6. REMOVE DECAYED, VERMIN-INFESTED, OR OTHERWISE DANGEROUS OR UNSUITABLE MATERIALS AND PROMPTLY DISPOSE OF OFF-SITE.
7. REMOVE STRUCTURAL FRAMING MEMBERS AND LOWER TO GROUND BY METHOD SUITABLE TO AVOID FREE FALL AND TO PREVENT GROUND IMPACT OR DUST GENERATION.
8. LOCATE SELECTIVE DEMOLITION EQUIPMENT AND REMOVE DEBRIS AND MATERIALS SO AS NOT TO IMPOSE EXCESSIVE LOADS ON SUPPORTING WALLS, FLOORS, OR FRAMING.
9. DISPOSE OF DEMOLISHED ITEMS AND MATERIALS PROMPTLY. COMPLY WITH REQUIREMENTS IN SECTION 017419 - CONSTRUCTION WASTE MANAGEMENT AND DISPOSAL.

B. REMOVED AND SALVAGED ITEMS:

1. CLEAN SALVAGED ITEMS.
2. PACK OR CRATE ITEMS AFTER CLEANING. IDENTIFY CONTENTS OF CONTAINERS.
3. STORE ITEMS IN A SECURE AREA UNTIL DELIVERY TO USER AGENCY.
4. TRANSPORT ITEMS TO STORAGE AREA DESIGNATED BY THE DCAM PROJECT MANAGER.
5. PROTECT ITEMS FROM DAMAGE DURING TRANSPORT AND STORAGE.

C. REMOVED AND REINSTALLED ITEMS:

1. CLEAN AND REPAIR ITEMS TO FUNCTIONAL CONDITION ADEQUATE FOR INTENDED REUSE. PAINT EQUIPMENT TO MATCH NEW EQUIPMENT.
2. PACK OR CRATE ITEMS AFTER CLEANING AND REPAIRING. IDENTIFY CONTENTS OF CONTAINERS.
3. PROTECT ITEMS FROM DAMAGE DURING TRANSPORT AND STORAGE.
4. REINSTALL ITEMS IN LOCATIONS INDICATED. COMPLY WITH INSTALLATION REQUIREMENTS FOR NEW MATERIALS AND EQUIPMENT. PROVIDE CONNECTIONS, SUPPORTS, AND MISCELLANEOUS MATERIALS NECESSARY TO MAKE ITEM FUNCTIONAL FOR USE INDICATED.

D. EXISTING ITEMS TO REMAIN: PROTECT CONSTRUCTION INDICATED TO REMAIN AGAINST DAMAGE AND SOILING DURING SELECTIVE DEMOLITION. WHEN PERMITTED BY DESIGNER, ITEMS MAY BE REMOVED TO A SUITABLE, PROTECTED STORAGE LOCATION DURING SELECTIVE DEMOLITION AND CLEANED AND REINSTALLED IN THEIR ORIGINAL LOCATIONS AFTER SELECTIVE DEMOLITION OPERATIONS ARE COMPLETE.

E. ITEMS FOR RE-USE AND PRESERVATION OF EXISTING SURFACES TO REMAIN:

1. THE CONTRACTOR SHALL INSPECT CLOSELY EACH ITEM SPECIFICALLY DESIGNATED TO BE RELOCATED, RE-USED, OR TURNED OVER TO THE OWNER PRIOR TO ITS REMOVAL, AND IMMEDIATELY REPORT DAMAGES AND DEFECTS TO THE DESIGNER AND DCAM PROJECT MANAGER. THE CONTRACTOR SHALL BE RESPONSIBLE FOR ANY SUBSEQUENT DAMAGE TO THE SAME OTHER THAN LATENT DEFECTS NOT READILY APPARENT FROM CLOSE INSPECTION, AND SHALL BEAR RESPONSIBILITY FOR ITS REPAIR OR SAME REPLACEMENT AS DIRECTED BY THE DESIGNER, TO THE SATISFACTION OF THE DCAM PROJECT MANAGER.
2. UNLESS SPECIAL SURFACE PREPARATION IS SPECIFIED UNDER OTHER SPECIFICATION SECTIONS, LEAVE EXISTING SURFACES THAT ARE TO REMAIN IN A CONDITION SUITABLE TO RECEIVE NEW MATERIALS AND/OR FINISHES.

3.5 PROTECTION OF PUBLIC AND PROPERTY

A. PROVIDE ALL MEASURES REQUIRED BY FEDERAL, STATE AND MUNICIPAL LAWS, REGULATIONS, AND ORDINANCES FOR THE PROTECTION OF SURROUNDING PROPERTY, THE PUBLIC, WORKMEN, AND COMMONWEALTH'S EMPLOYEES DURING ALL DEMOLITION AND REMOVAL OPERATIONS. MEASURES ARE TO BE TAKEN, BUT NOT LIMITED TO INSTALLATION OF SIDEWALKS, SHEDS, BARRICADES, FENCES, WARNING LIGHTS AND SIGNS, TRASH CHUTES AND TEMPORARY LIGHTING.

B. PROTECT ALL WALKS, ROADS, STREETS, CURBS, PAVEMENTS, TREES AND PLANTINGS, ON AND OFF PREMISES, AND BEAR ALL COSTS FOR CORRECTING SUCH DAMAGE AS DIRECTED BY THE DESIGNER, AND TO THE SATISFACTION OF THE DCAM PROJECT MANAGER.

C. DEMOLITION SHALL BE PERFORMED IN SUCH A MANNER THAT WILL INSURE THE SAFETY OF ADJACENT PROPERTY. PROTECT ADJACENT PROPERTY FROM DAMAGE AND PROTECT PERSONS OCCUPYING ADJACENT PROPERTY FROM INJURIES WHICH MIGHT OCCUR FROM FALLING DEBRIS OR OTHER CAUSE AND SO AS NOT TO CAUSE INTERFERENCE WITH THE USE OF OTHER PORTIONS OF THE BUILDING, OF ADJACENT BUILDINGS OR THE FREE ACCESS AND SAFE PASSAGE TO AND FROM THE SAME.

D. EVERY PRECAUTION SHALL BE TAKEN TO PROTECT AGAINST MOVEMENT OR SETTLEMENT OF THE BUILDING, OF ADJACENT BUILDINGS, STRUCTURES, SIDEWALKS, ROADS, STREETS, CURBS AND PAVEMENTS. PROVIDE AND PLACE AT THE CONTRACTOR'S OWN EXPENSE, ALL NECESSARY BRACING AND SHORING IN CONNECTION WITH DEMOLITION AND REMOVAL WORK.

E. REMOVE PORTIONS OF STRUCTURES WITH CARE BY USING TOOLS AND METHODS THAT WILL NOT TRANSFER HEAVY SHOCKS TO EXISTING AND ADJACENT BUILDING STRUCTURES, BOTH INTERNAL AND EXTERNAL OF THE PARTICULAR WORK AREA.

F. PROVIDE AND MAINTAIN IN PROPER CONDITION, SUITABLE FIRE RESISTIVE DUST BARRIERS AROUND AREAS WHERE INTERIOR DEMOLITION AND REMOVAL WORK IS IN PROGRESS. DUST BARRIERS SHALL PREVENT THE DUST MIGRATION TO ADJACENT AREAS. REMOVE DUST BARRIERS UPON COMPLETION OF MAJOR DEMOLITION AND REMOVAL IN THE PARTICULAR WORK AREA.

G. PROTECT UNALTERED PORTIONS OF EXISTING CONSTRUCTION, INCLUDING FINISHES, FURNISHINGS AND EQUIPMENT

H. PROVIDE SECURE WEATHER PROTECTION WHERE DEMOLITION HAS REMOVED A PORTION OF THE EXTERIOR ENVELOPE.

3.6 DISCOVERY OF HAZARDOUS MATERIALS

A. IF HAZARDOUS MATERIALS, SUCH AS CHEMICALS, ASBESTOS-CONTAINING MATERIALS, OR OTHER HAZARDOUS MATERIALS ARE DISCOVERED DURING THE COURSE OF THE WORK, CEASE WORK IN AFFECTED AREA ONLY AND IMMEDIATELY NOTIFY THE DESIGNER AND THE DCAM PROJECT MANAGER OF SUCH DISCOVERY. DO NOT PROCEED WITH WORK IN SUCH AREAS UNTIL INSTRUCTIONS ARE ISSUED BY THE DESIGNER. CONTINUE WORK IN OTHER AREAS.

B. IF UNMARKED CONTAINERS ARE DISCOVERED DURING THE COURSE OF THE WORK, CEASE WORK IN THE AFFECTED AREA ONLY AND IMMEDIATELY NOTIFY THE DESIGNER AND THE DCAM PROJECT MANAGER OF SUCH DISCOVERY. DO NOT PROCEED WITH WORK IN SUCH AREAS UNTIL INSTRUCTIONS ARE ISSUED BY THE DESIGNER. TAKE IMMEDIATE PRECAUTIONS TO PROHIBIT ENDANGERING THE CONTAINERS INTEGRITY. CONTINUE WORK IN OTHER AREAS.

3.7 CUTTING

A. PERFORM ALL CUTTING OF EXISTING SURFACES IN A MANNER WHICH WILL ENSURE A MINIMAL DIFFERENCE BETWEEN THE CUT AREA AND NEW MATERIALS WHEN PATCHED. USE EXTREME CARE WHEN CUTTING EXISTING SURFACES CONTAINING CONCEALED UTILITY LINES WHICH ARE INDICATED TO REMAIN AND BEAR FULL RESPONSIBILITY FOR REPAIRING OR REPLACEMENT OF ALL SUCH UTILITIES THAT ARE ACCIDENTALLY DAMAGED.

B. PROVIDE A FLUSH SAW CUT EDGE WHERE PAVEMENT, CURB AND CONCRETE REMOVALS ABUT NEW CONSTRUCTION WORK OR EXISTING SURFACES TO REMAIN UNDISTURBED.

3.8 BLASTING

A. WHEN BLASTING IS ALLOWED BY DCAM, OBTAIN WRITTEN PERMISSION AND APPROVAL OF METHOD FOR BLASTING FROM THE DESIGNER WITH CONCURRENCE OF THE DCAM PROJECT MANAGER, FIRE CHIEF, AND LOCAL AUTHORITIES BEFORE PROCEEDING WITH EXPLOSIVE OPERATIONS.

B. NOTIFY THE DCAM PROJECT MANAGER AT LEAST 48 HOURS BEFORE ANY INTENDED BLASTING AND DO NO BLASTING WITHOUT SPECIFIC WRITTEN APPROVAL OF EACH BLASTING

OPERATION. CONDUCT BLASTING OPERATIONS USING EXPLOSIVES OF SUCH QUANTITY AND POWER, AND FIRED IN SUCH SEQUENCE AND LOCATIONS, AS NOT TO INJURE PERSONNEL OR DAMAGE PROPERTY, OR DAMAGE ADJACENT WORK.

C. ASSUME FULL RESPONSIBILITY FOR DAMAGES RESULTING FROM OR ATTRIBUTABLE TO BLASTING OPERATIONS.

D. ALL ROCK BLASTING SHALL BE WELL COVERED WITH HEAVY MATS OR TIMBERS CHAINED TOGETHER AND THE CONTRACTOR SHALL TAKE GREAT CARE TO DO NO DAMAGE TO EXISTING BUILDINGS, FOUNDATIONS, EXISTING ROADWAYS, GLAZED AREAS AND TREES TO REMAIN. ANY DAMAGE CAUSED BY THE WORK OF THIS CONTRACTOR SHALL BE REPAIRED TO THE FULL SATISFACTION OF THE DCAM PROJECT MANAGER AT NO ADDITIONAL COST TO DCAM.

3.9 DISPOSAL OF DEMOLISHED MATERIALS

A. GENERAL: COMPLY WITH REQUIREMENTS OF SECTION 017419 - CONSTRUCTION WASTE MANAGEMENT AND DISPOSAL AND THE FOLLOWING.

1. DO NOT ALLOW DEMOLISHED MATERIALS TO ACCUMULATE ON-SITE.
2. REMOVE AND TRANSPORT DEBRIS IN A MANNER THAT WILL PREVENT SPILLAGE ON ADJACENT SURFACES AND AREAS.
3. REMOVE DEBRIS FROM ELEVATED PORTIONS OF BUILDING BY CHUTE, HOIST, OR OTHER DEVICE THAT WILL CONVEY DEBRIS TO GRADE LEVEL IN A CONTROLLED DESCENT.

B. BURNING: DO NOT BURN DEMOLISHED MATERIALS.

3.10 CLEANING

A. CLEAN ADJACENT STRUCTURES AND IMPROVEMENTS OF DUST, DIRT, AND DEBRIS CAUSED BY SELECTIVE DEMOLITION OPERATIONS. PREMISES SHALL BE LEFT IN A CLEAN CONDITION AND READY TO ACCEPT ALTERATION WORK AND NEW CONSTRUCTION.

END OF SECTION

Appendix A
Equipment Cut Sheets

KLING STUBBINS

Appendix A.1
Premium Efficiency Motors

General Information

- Overview
- Specifications
- Performance Data
- Parts List
- Drawings

More Information

- Where To Buy
- Baldor Sales Offices

Return to List

AC Motors | Premium Efficient | Three Phase | 1400-1800 RPM | 230/460 Volt | OPSB Encl |

Specifications: EM3218T

SPEC. NUMBER:	36G548S270G1
CATALOG NUMBER:	EM3218T
FL AMPS:	14-13.2/6.6
208V AMPS:	14
BEARING-DRIVE-END:	6206
BEARING-OPP-DRIVE-END:	6205
DESIGN CODE:	B
DOE-CODE:	010A
FL EFFICIENCY:	89.5
ENCLOSURE:	OPSB
FRAME:	184T
HERTZ:	60
INSULATION-CLASS:	F
KVA-CODE:	J
SPEED [rpm]:	1750
OUTPUT [hp]:	5
PHASE:	3
POWER-FACTOR:	80
RATING:	40C AMB-CONT
SERIAL-NUMBER:	--
SERVICE FACTOR:	1.15
VOLTAGE:	208-230/460

* For certified information, contact your local Baldor office.

Copyright © 2001-2011 Baldor Electric Company. All rights reserved. | Terms of Use | Privacy Policy

KLING STUBBINS

Appendix A.2
Variable Air Volume (VAV) Boxes

ESV Single Duct Terminal

Design Features

Leading the Industry: The Titus ESV Single Duct VAV Terminal

Single duct terminals are the fundamental building blocks for a variable air volume (VAV) system. Their primary function is to regulate airflow to a zone, in response to zone temperature requirements. The Titus ESV is unique as it incorporates many design features that increase performance, decrease installation and service cost and offers increased value, over and above this basic function.

All VAV terminals are not equal! By specifying the Titus ESV, you are assured of accurate, ARI Certified performance ratings. All units are tested, and data shown, in accordance with ARI Standards. A wide selection of unit configurations, accessories and control types provide considerable scope for problem solving and cost-effective innovation.

The ESV's compact size and easy access for service saves time and expense in installation. The ESV fits easily in cramped mechanical spaces, either in new building construction or retrofit.

Building owners will benefit from the energy efficient low leakage design, reducing utility expenses. Control accuracy, especially at minimum flow rates, is easier to achieve with a Titus multi-point inlet velocity sensor. Control accuracy is critical in maintaining good air quality reducing energy waste.

The ESV's standard insulation is a dual density liner. The skin resists abrasion and erosion from air movement. The body maximizes thermal and acoustical performance. The Titus single blade damper design helps reduce noise levels too, for a quieter work environment.

Casing Leakage

Inlet Size	Casing Leakage, cfm		
	0.25" ΔPs	0.5" ΔPs	1.0" ΔPs
4, 5, 6	2	3	3
7, 8	3	3	5
9, 10	3	4	6
12	4	5	7
14	4	6	9
16	5	7	10

Damper Leakage

Inlet Size	Damper Leakage, cfm		
	1.5" ΔPs	3.0" ΔPs	6.0" ΔPs
4, 5, 6	4	5	7
7, 8	4	5	7
9, 10	4	5	7
12	4	5	7
14	4	6	8
16	5	7	9

Here are more reasons to specify and select the Titus ESV:

Titus innovation carries through the widest array of standard single duct terminal configurations. ETL listed electric coils, manufactured by Titus, are installed, wired and functionally tested as an integral unit before shipment for quicker, trouble-free job-site installation. Multiple outlets with standard locking balancing dampers and integral attenuators are also available.

Titus continues to offer the most innovative and popular lining alternatives for special applications including Fibre-Free; the industry benchmark Steri-Loc; and the premium double wall liner, UltraLoc.

Fibre-Free eliminates the requirement for foil linings and solid inner liners since there is no fiberglass in the airstream. Additionally, Fibre-Free minimizes mold growth since it holds no moisture, is acoustically preferable to foil or solid metal linings and maintains acceptable thermal protection. All of these benefits are available at a competitive price and significantly less than solid metal liners.

Steri–Loc provides a smooth, nonporous skin to guard against mold and bacteria growth. Erosion is eliminated, as there is no glass fiber exposure to the airstream. It has reinforced surfaces that can be wiped down.

Steri–Loc adds the feature of a very high density, rigid insulation and special "Z-Strip" construction for an extremely rigid terminal. Sound levels are generally superior to dual wall construction, while offering virtually identical levels of protection.

Titus - experts in DDC zone control!

With a detailed understanding developed through years of selling and supporting the powerful TD1 digital controller, Titus has industry leading experience in the application of Direct Digital Control (DDC) to terminals. This same expertise is made available when your project requires quality engineering, coordination and manufacturing for factory mounting when controls are supplied by others.

Count on Titus - the industry leader in VAV!

AeroCross™ multi-point, center averaging sensor amplifies flow signal for best control of low flow rates. Center averaging feature provides signal accuracy regardless of inlet duct configuration.

Unique integral fold fabrication method increases lining and casing integrity and minimizes leakage.

Damper design provides smoother airflow for reduced sound levels and lower leakage.

Standard insulation is ½-inch dual density, to resist erosion at surface velocities up to 5,000 fpm. Meets requirements of NFPA 90A and UL181.

Delrin® damper bearings provide smoother damper operation.

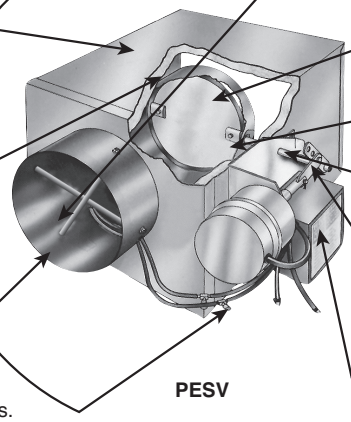

Field convertible linkage (pneumatic controls) allows NO or NC damper position without actuator removal.

Beaded inlet for consistent roundness and low leakage construction, sized to fit standard round duct.

Cast position indicator on damper shaft for easier monitoring of damper position. Shaft is ½-inch diameter for compatibility with almost any actuator design.

Flow measurement taps included when velocity sensor is provided, for easy balancing connections.

Sheet metal cover protects pneumatic velocity controller (optional).

PESV

Fibre-Free is an ideal IAQ insulation providing acoustical and thermal characteristics of fiberglass insulation without the concern of fiberglass in the airstream.

Optional Fibre-Free and reinforced sealed skin of Steri-Loc and metal lined UltraLoc lining guard against environments favoring bacteria and mold growth. Meets UL 181 and NFPA 225 (25/50).

NEMA 1 control enclosure available for protection of electronic controls. Double backplane construction for strength and easier control installation, with no exposed screw tips for safe handling.

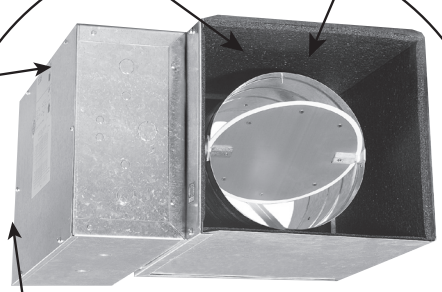

UL Class II transformers and disconnect switches available installed for use with any electronic control configuration.

Multiple knockouts in sizes from $^{7}/_{16}$-inch to $1^{1}/_{8}$-inch to accommodate almost any field connection requirement.

DESV

ESV • Basic Unit with Controls

Models:

- PESV • Pneumatic
- EESV • Electric
- AESV • Analog Electronic
- DESV • Digital Electronic

- Standard AeroCross™ multi-point center averaging velocity sensor (except EESV).
- Standard dual density insulation.
- Standard 22-gauge casing with slip and drive discharge connection.
- Controls supplied by Titus are factory calibrated for a quicker start-up.

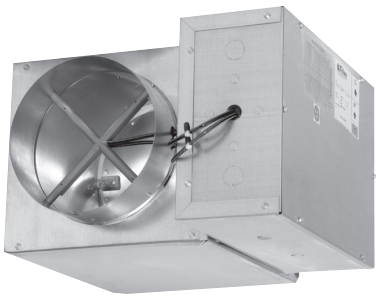

DESV

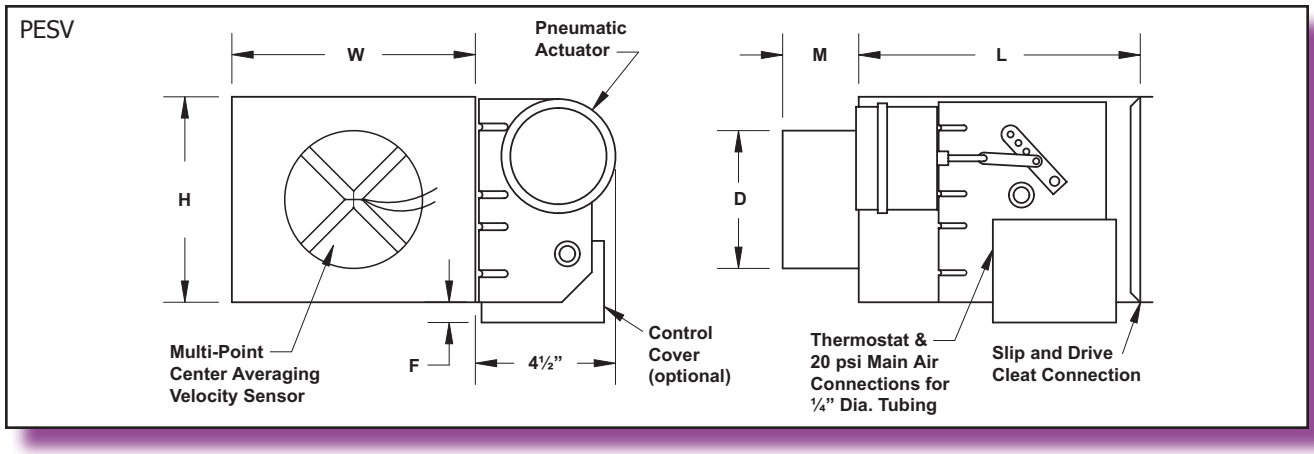

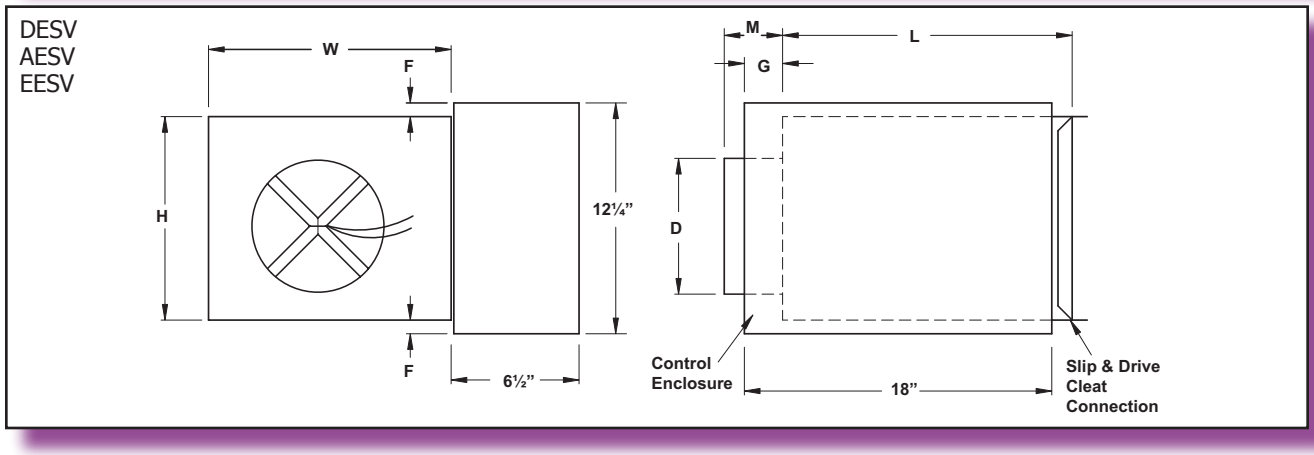

Inlet Size	cfm Range	D	F		G	H	L	M	W
			PESV	AESV DESV EESV					
4	0-225	3⅞	1⅞	2⅛	7⅜	8	15½	5⅜	12
5	0-350	4⅞	1⅞	2⅛	7⅜	8	15½	5⅜	12
6	0-500	5⅞	1⅞	2⅛	7⅜	8	15½	3⅜	12
7	0-650	6⅞	⅞	1⅛	7⅜	10	15½	3⅜	12
8	0-900	7⅞	⅞	1⅛	7⅜	10	15½	3⅜	12
9	0-1050	8⅞	-	-	5⅜	12½	15½	3⅜	14
10	0-1400	9⅞	-	-	5⅜	12½	15½	3⅜	14
12	0-2000	11⅞	-	-	5⅜	15	15½	3⅜	16
14	0-3000	13⅞	-	-	3⅜	17½	15½	3⅜	20
16	0-4000	15⅞	-	-	3⅜	18	15½	3⅜	24
24x16	0-8000	23⅞ - 15⅞	⅞	1⅛	5⅜	18	15	3⅜	38

All dimensions are in inches.

Accessories

Integral Sound Attenuator
Titus' unique integral design minimizes casing leakage and disturbance to airflow with no casing or insulation seams.

Integral Electric Coil
With a rigid one piece assembly, Titus locates the heating elements for optimal heat transfer and insets them for protection during shipment and installation.

Standard Features:
- Primary automatic reset thermal cutout (one per coil).
- Secondary manual reset thermal cutout.
- Airflow switch (differential pressure).
- Derated nickel chrome heating elements.
- Magnetic or safety contactors (as required).
- Line terminal block.
- Control terminal block.
- ETL listed.
- 80/20 nickel chrome element wire.

Optional Features:
- Class II, 24 volt control transformer.
- Mercury contactors.
- Door interlock disconnect switch.
- Main supply fuses.
- Dust tight construction.

Hot Water Reheat Coils
Details on water coil features are shown on performance pages Q21-24.

Integral Sound Attenuator with Optional Hot Water Reheat Coil

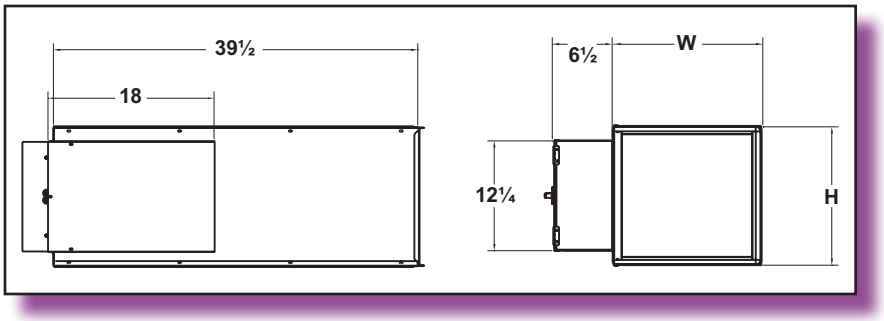

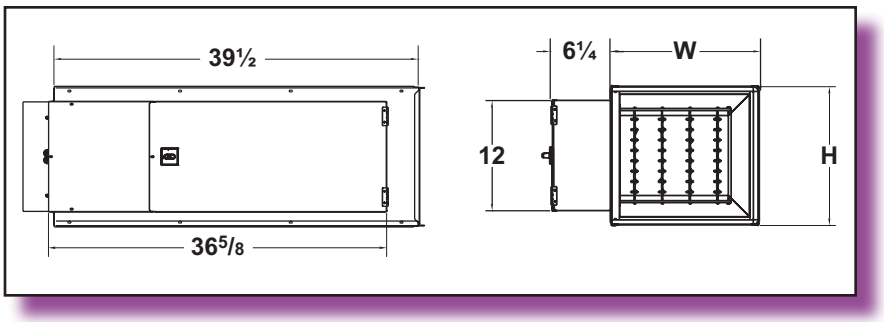

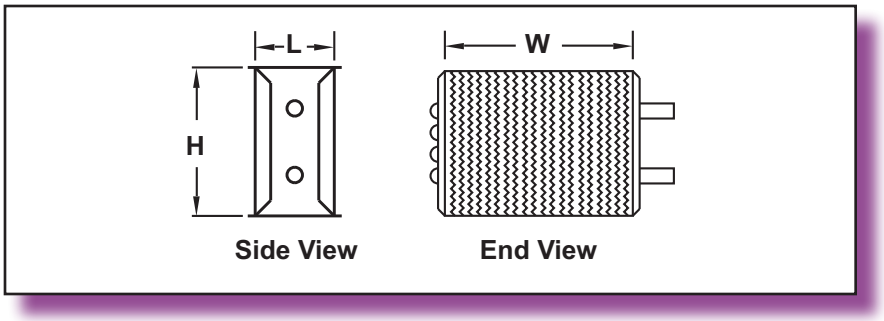

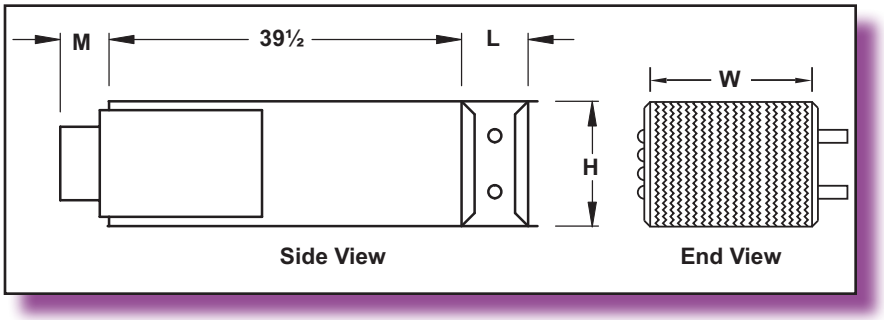

Inlet Size	H	M	W	Water Coil	
				L (1-2 Row)	L (3-4 Row)
4, 5	8	5⅜	12	5	7¼
6	8	3⅜	12	5	7¼
7, 8	10	3⅜	12	5	7¼
9, 10	12½	3⅜	14	5	7¼
12	15	3⅜	16	5	7¼
14	17½	3⅜	20	7½	9¾
16	18	3⅜	24	7½	9¾
24x16	18	3⅜	38	5	7¼

Note: The total length of the ESV basic unit and accessories (attenuators and coils) is the summation of basic unit length and the accessories length.

All dimensions are in inches.

Accessories (continued)

Multi-Outlet Plenums for Single Duct Terminals

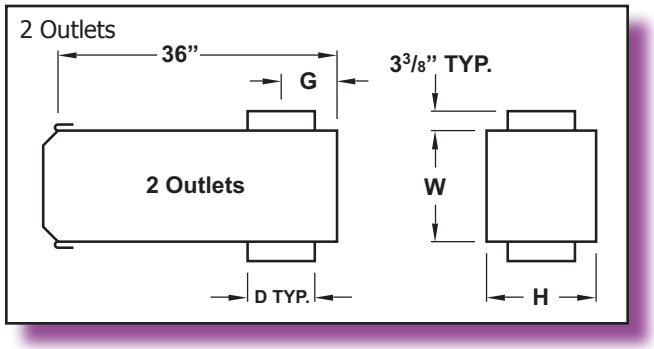

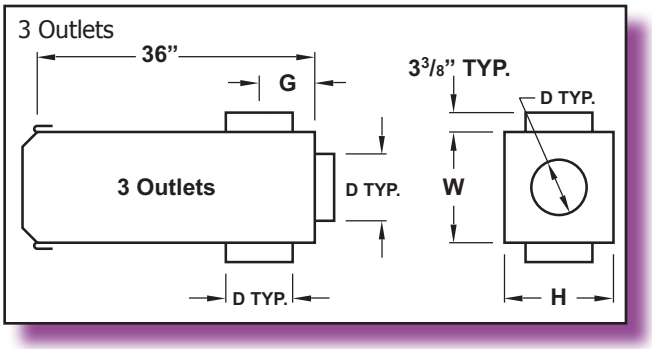

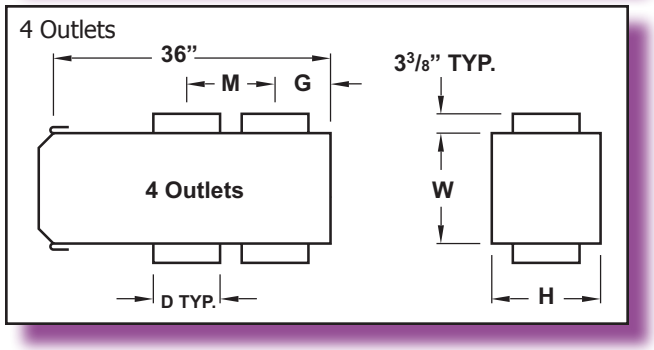

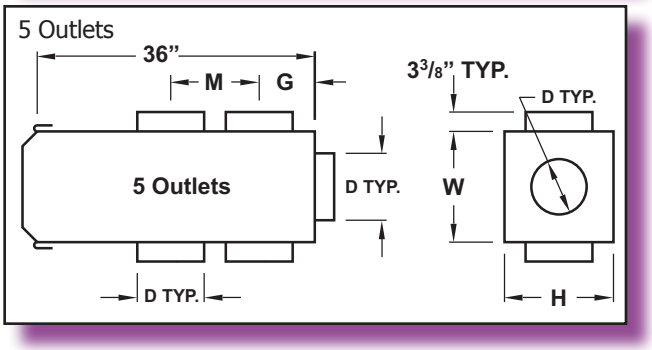

ESV Unit Sizes	Outlet Size D	2 Outlets		3 Outlets		4 Outlets		5 Outlets		H	W
		G	M	G	M	G	M	G	M		
4, 5, 6	5⅞	4⅜	-	4⅜	-	-	-	-	-	8	12
7, 8	7⅞	5⅜	-	5⅜	-	5⅜	12	-	-	10	12
8	7⅞	-	-	-	-	-	-	5⅜	12	10	12
9, 10	9⅞	5⅜	-	5⅜	-	5⅜	14	-	-	12½	14
9, 10	7⅞	-	-	5⅜	-	5⅜	12	-	-	12½	14
12	11⅞	6⅜	-	6⅜	-	-	-	-	-	15	16
12	9⅞	-	-	6⅜	-	6⅜	14	6⅜	14	15	16
14	11⅞	6⅜	-	6⅜	-	-	-	-	-	17½	20
14	9⅞	-	-	6⅜	-	6⅜	14	6⅜	14	17½	20
16	11⅞	6⅜	-	6⅜	-	-	-	-	-	18	24
16	9⅞	-	-	6⅜	-	6⅜	14	6⅜	14	18	24

Round Outlets

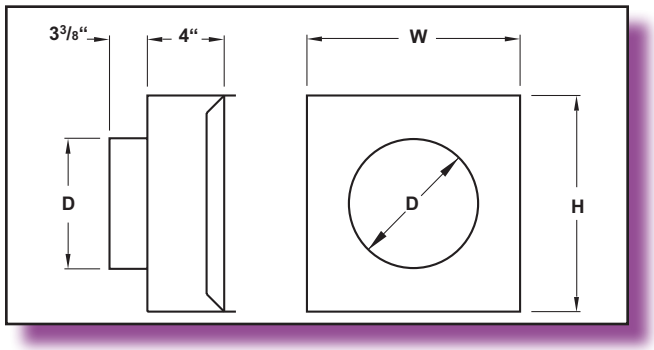

Unit Size	D	H	W
4	3⅞	8	12
5	4⅞	8	12
6	5⅞	8	12
7	6⅞	10	12
8	7⅞	10	12
9	8⅞	12½	14
10	9⅞	12½	14
12	11⅞	15	16
14	13⅞	17½	20
16	15⅞	18	24

All dimensions are in inches.

Performance Data

Recommended Primary Air cfm Ranges • All Terminals

Control Types:

- PESV • Pneumatic
- AESV • Analog electronic
- DESV • Digital electronic

Quick Selection Procedure

1. Select unit inlet size based upon acoustic parameters and/ or maximum pressure drop requirements, using pages Q12–Q13.
2. Check inlet size selection against cfm control limits based on control type shown on this page.
3. Select accessories (multi-outlets, attenuators) as required.
4. Select reheat coil, if required. Make your selection using the actual heating flow rate, not cooling.

AESV

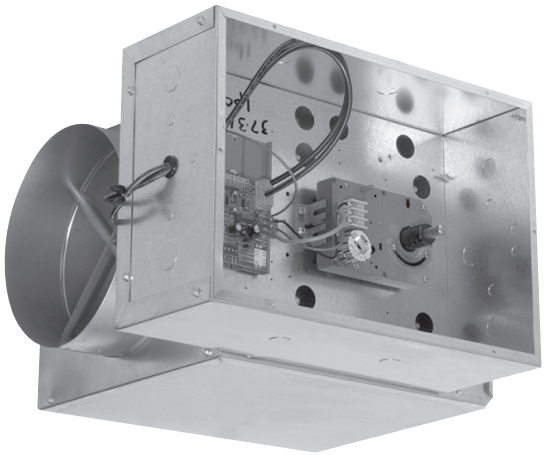

Inlet Size	Total cfm Range	cfm Ranges of Minimum and Maximum Settings							
		PESV - Pneumatic TITUS II Controller		PESV - Pneumatic TITUS I Controller		AESV - Analog Electronic TA1 Controller		DESV - Digital Typical Controller	
		Minimum	Maximum	Minimum	Maximum	Minimum	Maximum	Minimum	Maximum
4	0-225	45*-170	80-225	55*-170	80-225	45*-225	45-225	45*-225	45-225
5	0-350	65*-270	120-350	85*-270	120-350	65*-350	65-350	65*-350	65-350
6	0-500	80*-330	150-500	105*-330	150-500	80*-500	80-500	80*-500	80-500
7	0-650	105*-425	190-650	135*-425	190-650	105*-650	105-650	105*-650	105-650
8	0-900	145*-590	265-900	190*-590	265-900	145*-900	145-900	145*-900	145-900
9	0-1050	175*-700	315-1050	225*-700	315-1050	175*-1050	175-1050	175*-1050	175-1050
10	0-1400	230*-925	415-1400	300*-925	415-1400	230*-1400	230-1400	230*-1400	230-1400
12	0-2000	325*-1330	600-2000	425*-1330	600-2000	325*-2000	325-2000	325*-2000	325-2000
14	0-3000	450*-1800	810-3000	575*-1800	810-3000	450*-3000	450-3000	450*-3000	450-3000
16	0-4000	580*-2350	1100-4000	750*-2350	1100-4000	580*-4000	580-4000	580*-4000	580-4000
24x16	0-8000	1400*-5200	2600-8000	1800*-5200	2600-8000	1400*-7500	1400-7500	1400*-7500	1400-7500

*Factory cfm settings (except zero) will not be made below this range because control accuracy is reduced.
On pressure dependent units, minimum cfm is always zero and there is no maximum.

Note: On controls mounted by Titus but supplied by others (FMA or Factory Mounting Authorization), these values are guidelines only. Controls mounted on an FMA basis are calibrated in the field.

Performance Data (continued)

PESV, AESV, DESV • Minimum Pressures

Inlet Size	cfm	Velocity Pressure VP	Basic Unit ΔPs	Basic + Atten. ΔPs	Basic + Multi-out. ΔPs	Basic + Round Out. ΔPs	Basic + 1 Row Coil ΔPs	Basic + 2 Row Coil ΔPs	Basic + 3 Row Coil ΔPs	Basic + 4 Row Coil ΔPs	Basic + Elec. Coil. ΔPs
4	100	0.080	0.020	0.021	0.022	0.023	0.027	0.034	0.041	0.048	0.020
	150	0.181	0.044	0.048	0.049	0.052	0.061	0.078	0.093	0.109	0.044
	200	0.322	0.078	0.084	0.088	0.092	0.108	0.138	0.165	0.193	0.078
	225	0.407	0.099	0.107	0.111	0.116	0.137	0.175	0.209	0.244	0.099
5	150	0.072	0.011	0.014	0.016	0.018	0.028	0.044	0.060	0.075	0.011
	200	0.129	0.019	0.025	0.029	0.032	0.049	0.079	0.106	0.134	0.019
	300	0.289	0.043	0.057	0.064	0.073	0.111	0.177	0.239	0.301	0.043
	350	0.394	0.059	0.077	0.088	0.099	0.151	0.241	0.325	0.410	0.059
6	200	0.059	0.033	0.038	0.044	0.060	0.063	0.092	0.120	0.147	0.033
	300	0.133	0.073	0.085	0.098	0.134	0.141	0.207	0.269	0.331	0.073
	400	0.236	0.130	0.151	0.175	0.238	0.250	0.368	0.478	0.588	0.130
	500	0.369	0.203	0.236	0.273	0.372	0.391	0.575	0.747	0.919	0.203
7	300	0.070	0.031	0.036	0.044	0.055	0.066	0.098	0.131	0.163	0.031
	400	0.125	0.055	0.064	0.079	0.098	0.118	0.175	0.232	0.290	0.055
	600	0.282	0.124	0.145	0.177	0.220	0.265	0.394	0.523	0.653	0.124
	650	0.331	0.145	0.170	0.208	0.259	0.311	0.462	0.613	0.766	0.145
8	350	0.052	0.005	0.009	0.015	0.031	0.053	0.097	0.141	0.185	0.042
	500	0.105	0.011	0.019	0.030	0.064	0.109	0.198	0.288	0.378	0.086
	700	0.207	0.021	0.038	0.059	0.126	0.213	0.388	0.564	0.741	0.169
	900	0.342	0.035	0.062	0.097	0.208	0.353	0.642	0.932	1.225	0.279
9	500	0.069	0.015	0.021	0.031	0.045	0.063	0.108	0.152	0.197	0.141
	650	0.117	0.026	0.035	0.052	0.076	0.107	0.182	0.258	0.334	0.237
	800	0.177	0.040	0.053	0.078	0.115	0.162	0.276	0.390	0.505	0.360
	1050	0.306	0.068	0.092	0.134	0.198	0.279	0.476	0.672	0.871	0.620
10	600	0.060	0.006	0.007	0.012	0.030	0.069	0.134	0.198	0.263	0.090
	800	0.107	0.011	0.012	0.022	0.054	0.124	0.238	0.352	0.467	0.160
	1100	0.203	0.021	0.023	0.041	0.102	0.234	0.449	0.665	0.883	0.303
	1400	0.328	0.035	0.035	0.066	0.165	0.378	0.728	1.077	1.430	0.491
12	900	0.064	0.012	0.006	0.014	0.033	0.080	0.150	0.222	0.292	0.101
	1200	0.113	0.021	0.011	0.025	0.058	0.142	0.266	0.394	0.519	0.180
	1500	0.177	0.032	0.016	0.039	0.091	0.222	0.416	0.616	0.811	0.281
	2000	0.314	0.057	0.029	0.070	0.162	0.395	0.740	1.095	1.441	0.500
14	1200	0.063	0.013	0.018	0.029	0.046	0.077	0.137	0.195	0.254	0.094
	1600	0.113	0.023	0.032	0.052	0.082	0.138	0.243	0.347	0.451	0.166
	2000	0.176	0.036	0.050	0.082	0.128	0.215	0.379	0.543	0.705	0.260
	3000	0.396	0.080	0.112	0.184	0.289	0.484	0.854	1.221	1.587	0.584
16	1500	0.056	0.009	0.014	0.027	0.039	0.078	0.140	0.203	0.264	0.125
	2000	0.100	0.015	0.025	0.047	0.070	0.139	0.249	0.360	0.469	0.221
	3000	0.225	0.034	0.056	0.107	0.156	0.312	0.560	0.811	1.056	0.498
	4000	0.401	0.060	0.099	0.190	0.278	0.555	0.996	1.441	1.878	0.886
24x16	2500	0.038	0.013	0.014	NA	NA	0.091	0.161	0.233	0.303	0.242
	4000	0.096	0.033	0.035	NA	NA	0.233	0.411	0.595	0.776	0.619
	6000	0.216	0.073	0.079	NA	NA	0.523	0.925	1.340	1.746	1.392
	8000	0.384	0.130	0.140	NA	NA	0.931	1.644	2.382	3.103	2.475

- ΔPs is the difference in static pressure across the assembly.

- To obtain total pressure (Pt), add the velocity pressure for a given cfm to the static pressure drop (DPs) of the desired ESV configuration.

  Example: Pt for a Size 8 ESV Basic Unit @ 700 cfm = 0.207 + 0.021 = 0.228

Performance Data (continued)

PESV, AESV, DESV • Sound Data • NC Values

Inlet Size	cfm	Noise Criteria (NC) Discharge ΔPs 0.5″	1.0″	2.0″	3.0″	Radiated ΔPs 0.5″	1.0″	2.0″	3.0″
4	75	-	-	-	-	-	-	-	-
	125	-	-	22	23	-	20	24	26
	175	22	25	28	30	23	27	30	32
	225	26	29	32	34	28	32	35	37
5	125	-	-	-	-	-	-	-	21
	175	-	-	21	24	-	-	24	27
	250	-	22	26	29	-	25	30	33
	300	-	22	28	31	23	28	33	36
	350	21	25	30	33	25	30	36	39
6	175	-	-	-	23	-	-	20	23
	225	-	-	23	27	-	-	24	28
	300	-	20	26	30	-	23	29	32
	350	-	22	29	32	-	25	31	35
	400	-	25	31	35	22	28	34	37
	450	20	26	33	36	24	30	35	39
	500	22	28	34	38	25	31	37	41
7	250	-	-	22	24	-	-	20	24
	300	-	-	21	25	-	-	23	26
	350	-	-	24	28	-	20	24	28
	400	-	-	26	30	-	22	26	29
	500	-	23	30	34	22	24	30	33
	600	-	27	33	37	24	27	33	36
	650	21	28	35	39	24	28	34	38
8	350	-	-	24	28	-	-	23	26
	400	-	-	26	30	-	20	24	27
	450	-	21	28	31	-	22	25	29
	500	-	22	29	33	-	23	27	31
	600	-	25	32	36	21	25	30	33
	700	20	27	34	38	23	27	32	36
	800	-	27	33	37	24	29	34	38
9	450	-	-	20	23	-	-	25	29
	500	-	-	22	25	-	-	26	30
	600	-	-	24	28	-	21	27	31
	700	-	21	26	30	-	22	29	33
	800	-	20	26	29	-	23	30	34
	900	-	22	28	31	21	24	31	35
	1000	20	24	29	33	22	26	32	36

Inlet Size	cfm	Noise Criteria (NC) Discharge ΔPs 0.5″	1.0″	2.0″	3.0″	Radiated ΔPs 0.5″	1.0″	2.0″	3.0″
10	550	-	-	25	29	-	25	32	36
	600	-	20	26	30	-	26	32	36
	700	-	22	28	31	20	26	33	37
	800	-	21	27	30	21	27	33	37
	1000	20	23	29	33	23	28	34	38
	1200	22	25	31	35	25	29	36	40
	1400	24	27	33	36	26	31	37	42
12	800	-	-	26	29	-	22	29	32
	900	-	21	27	31	-	24	30	34
	1000	-	22	28	32	-	25	31	35
	1200	-	24	30	34	21	27	33	37
	1500	20	26	33	36	23	29	36	39
	1800	22	28	34	38	25	31	37	41
	2000	23	29	36	39	26	32	39	42
14	1000	-	-	25	31	-	21	27	30
	1200	-	-	26	31	-	22	28	32
	1500	-	-	26	32	-	25	31	34
	1800	-	20	27	32	21	27	32	36
	2100	-	21	28	32	22	28	34	38
	2400	-	22	29	33	24	30	35	39
	3000	-	24	31	35	26	32	38	41
16	1400	-	-	-	21	-	-	22	25
	1600	-	-	-	23	-	-	24	27
	2000	-	-	23	26	-	22	27	31
	2400	-	21	26	29	-	24	30	34
	2800	-	23	28	31	21	27	33	36
	3200	21	25	30	33	23	29	35	38
	4000	24	28	33	36	27	32	38	42
24x16	3000	25	30	35	39	37	39	40	41
	3500	26	32	37	40	40	41	43	43
	4000	28	33	39	42	43	44	45	46
	5000	30	36	41	44	47	48	49	50
	6000	32	38	43	46	50	52	53	54
	7000	34	40	45	48	53	54	56	57
	8000	36	41	47	50	56	57	58	59

- ΔPs is the difference in static pressure from inlet to discharge.
- Dash (-) in space denotes NC value less than 20.
- All sound data are based upon tests conducted in accordance with ARI Standard 880-98.

Octave Band Sound Attenuation Factors:

See the section, Engineering Guidelines for Noise Criteria (NC) value calculation.

Radiated Sound	Octave Band 2	3	4	5	6	7
Environmental Effect	2	1	0	0	0	0
Ceiling/Space Effect	16	18	20	26	31	36
Total dB Reduction	18	19	20	26	31	36

Per ARI 885-98
Mineral Fiber Tile, 5/8 inch -20lb./ cubic foot

Discharge Sound	Octave Band 2	3	4	5	6	7
Environmental Effect	2	1	0	0	0	0
Duct Lining	2	6	12	25	29	18
End Reflection	9	5	2	0	0	0
5 ft., 8 in. Flex Duct	6	10	18	20	21	12
Space Effect	5	6	7	8	9	10
Total dB Reduction	24	28	39	53	59	40

Per ARI 885-98
5 foot, 1-inch Fiberglass Duct Lining
8-inch Termination to Diffuser
Vinyl Core Flex
2500 cubic foot room, 5 feet from source

The following dB adjustments are used, perARI 885-98, for the calculation of NC above 300 cfm.

	Octave Band 2	3	4	5	6	7
300-700 cfm	2	1	1	-2	-5	-1
Over 700 cfm	4	3	2	-2	-7	-1

Performance Data (continued)

PESV, AESV, DESV • Acoustical Adjustments
Adjustments for Optional Attenuators

Inlet Size	Octave Band					
	2	3	4	5	6	7
4,5,6	1	2	4	12	17	11
7,8	1	2	4	12	15	10
9,10	1	1	3	11	13	9
12	1	1	3	10	11	8
14	1	1	3	9	10	7
16	1	1	3	8	9	7
40	1	1	3	8	7	6

- Select the appropriate unit size and subtract the value shown under each octave band heading from the Discharge Sound Power data shown on the following pages. Use the resultant values to calculate discharge NC.
- Data is based upon calculation procedures provided by the ASHRAE HVAC Applications Handbook.
- Use TEAMS Selection Program for specific performance data calculations.

Adjustments for Water Coils

The addition of a water coil to an ESV unit does not, by itself, create or attenuate sound generated by the unit to any measurable degree. The addition of a coil does; however, change the pressure drop across the unit, reducing it by the reported coil pressure drop. The sound data presented for ESV units is based on the unit's performance without a water coil. To properly determine the sound generated by an ESV with a water coil, the following steps should be taken:

1. Record the system supply static pressure.
2. Record the water coil pressure drop at the desired flow rate.
3. Subtract the water coil pressure drop from the design inlet pressure.
4. Enter the performance tables with this reduced inlet pressure to determine the sound generated by the damper in this condition.

Example: An ESV size 12 is selected for an application with a design inlet static pressure of 1 in. @ 1500 cfm. Using the application sound tables, this would be a radiated NC of 29. The water coil required, however, is a 2-row coil, therefore:

1. System Static Pressure = 1.0 (Design Pressure).
2. Water Coil Pressure = 0.41 (Water Coil Tables, 12-inch 2-row @ 1500 cfm).
3. 1.0 - 0.41 = 0.59 DP.
4. Actual Application NC = 24.

Note: This effect is true for any downstream pressure application, such as a restrictive duct or diffuser, or a high pressure drop filter.

Performance Data (continued)

PESV, AESV, DESV • Discharge Sound Power

Inlet Size	cfm	Sound Power Octave Bands																							
		0.5″ ΔPs						1.0″ ΔPs						2.0″ ΔPs						3.0″ ΔPs					
		2	3	4	5	6	7	2	3	4	5	6	7	2	3	4	5	6	7	2	3	4	5	6	7
4	75	59	49	42	38	38	31	61	51	47	43	44	39	62	54	51	48	51	47	63	56	54	51	54	52
	125	64	57	49	44	42	35	65	60	53	49	49	43	67	62	58	54	55	51	68	64	61	57	59	55
	175	67	62	53	48	45	37	68	65	58	53	51	45	70	68	62	58	58	53	71	69	65	61	62	58
	225	69	66	56	51	47	39	70	69	61	56	54	47	72	72	66	61	60	55	73	73	68	64	64	59
5	125	58	48	44	41	40	33	61	52	49	45	46	40	63	57	54	50	52	48	65	59	57	52	55	52
	175	61	52	48	44	42	35	64	57	53	49	48	43	66	61	58	54	54	50	68	64	61	56	58	55
	250	65	57	52	49	45	38	67	61	57	53	51	45	70	66	62	58	57	53	71	69	65	60	61	57
	300	66	59	54	51	47	39	69	64	59	55	53	46	71	69	65	60	59	54	73	71	68	62	62	58
	350	68	61	56	52	48	40	70	66	61	57	54	47	73	71	66	61	60	55	74	73	69	64	63	59
6	175	55	50	46	43	40	34	59	55	51	47	46	41	63	61	57	51	51	48	66	64	60	54	55	52
	225	57	53	49	46	43	36	61	58	54	50	48	43	66	64	60	54	54	50	68	67	63	57	57	54
	300	60	57	53	49	45	39	64	62	58	54	51	46	69	67	63	58	56	53	71	71	66	60	60	57
	350	61	59	54	51	47	40	66	64	60	56	52	47	70	69	65	60	58	54	73	73	68	62	61	58
	400	63	60	56	53	48	41	67	66	61	57	53	48	71	71	66	61	59	55	74	74	69	64	62	59
	450	64	62	57	54	49	42	68	67	63	59	54	49	73	73	68	63	60	56	75	76	71	65	63	60
	500	65	63	59	56	50	43	69	69	64	60	55	50	74	74	69	64	61	57	76	77	72	67	64	61
7	250	61	49	47	44	41	34	64	55	51	47	46	41	67	61	56	50	50	47	69	64	59	52	53	51
	300	62	52	49	46	43	36	65	58	53	49	47	42	68	63	58	53	52	49	69	67	61	55	55	52
	350	62	54	50	48	44	37	65	60	55	51	49	44	68	65	60	55	54	50	70	69	62	56	56	54
	400	63	56	52	50	45	38	66	62	56	53	50	45	69	67	61	56	55	51	71	71	64	58	58	55
	500	64	59	54	52	48	40	67	65	59	56	52	47	70	71	63	59	57	53	72	74	66	61	60	57
	600	65	62	56	55	49	42	68	67	61	58	54	48	71	73	65	61	59	55	73	77	68	63	61	58
	650	65	63	57	56	50	43	68	69	62	59	55	49	72	74	66	62	59	55	73	78	69	64	62	59
8	350	63	54	50	47	44	37	66	60	54	49	48	43	69	65	58	52	53	50	71	69	60	53	56	54
	400	64	55	51	48	45	38	67	61	55	51	49	44	70	67	59	53	54	51	71	70	61	55	56	55
	450	65	57	52	49	46	38	68	63	56	52	50	45	70	68	60	54	55	52	72	72	63	56	57	56
	500	65	58	53	50	46	39	68	64	57	53	51	46	71	70	61	55	55	53	73	73	64	57	58	56
	600	66	60	55	52	48	40	69	66	59	55	52	47	72	72	63	57	57	54	74	75	65	59	59	58
	700	67	62	56	54	49	41	70	68	60	56	53	48	73	74	64	59	58	55	75	77	67	60	60	59
	800	68	64	58	55	50	42	71	70	62	58	54	49	74	75	66	60	59	56	75	79	68	62	61	59
9	450	60	52	52	49	46	40	63	57	55	53	51	47	66	62	59	56	56	54	67	65	62	59	59	58
	500	61	54	52	50	47	41	64	58	56	54	52	47	67	63	60	57	57	54	68	66	62	59	59	58
	600	64	56	54	51	48	42	66	61	58	55	53	48	69	66	61	58	57	55	71	68	64	60	60	59
	700	65	58	55	52	49	42	68	63	59	56	53	49	71	67	63	59	58	56	72	70	65	61	61	60
	800	67	59	56	53	49	43	70	64	60	57	54	49	72	69	64	60	59	56	74	72	66	62	62	60
	900	68	61	57	54	50	43	71	66	61	57	55	50	74	71	65	61	59	57	75	73	67	63	62	61
	1000	69	62	58	55	50	44	72	67	61	58	55	50	75	72	65	62	60	57	77	75	68	64	63	61

ARI Certification Rating Points

Inlet Size	Rated cfm	Min ΔPs	Sound Power @ 1.5 IN SP					
			2	3	4	5	6	7
4	150	0.04	68	64	59	54	54	49
5	250	0.03	69	64	60	56	55	50
6	400	0.13	70	69	64	60	57	52
7	550	0.10	69	70	63	59	56	51
8	700	0.02	72	71	63	58	56	52
9	900	0.05	73	68	63	59	57	54
10	1100	0.01	74	70	65	63	60	55
12	1600	0.01	75	73	68	64	62	58
14	2100	0.04	72	68	66	63	63	59
16	2800	0.03	74	69	66	64	62	57
24x16	5300	0.06	85	80	77	72	73	69

Ratings in accordance with ARI Standard 880-98 and certified to ARI.

ARI PERFORMANCE CERTIFIED ™
ARI Standard 880 VAV Terminal
www.aridirectory.org

A Participating Corporation in the ARI 880 Certification Program

Single/Dual Duct Terminals | Performance Data

Performance Data (continued)

PESV, AESV, DESV • Discharge Sound Power

Inlet Size	cfm	Sound Power Octave Bands																							
		0.5″ ΔPs						1.0″ ΔPs						2.0″ ΔPs						3.0″ ΔPs					
		2	3	4	5	6	7	2	3	4	5	6	7	2	3	4	5	6	7	2	3	4	5	6	7
10	550	64	55	53	50	46	40	67	61	58	55	52	47	69	66	62	59	57	53	70	69	65	61	61	57
	600	65	56	54	51	47	41	67	61	58	55	52	47	70	67	63	60	58	54	71	70	65	62	61	58
	700	66	57	55	53	48	42	69	63	59	57	53	48	71	68	64	61	59	55	72	72	67	63	62	59
	800	68	59	56	54	49	43	70	64	60	58	54	49	72	70	65	62	60	56	73	73	67	64	63	60
	1000	70	61	58	56	50	44	72	66	62	60	56	51	74	72	67	64	61	57	75	75	69	66	65	61
	1200	71	62	59	57	51	45	73	68	63	61	57	52	76	73	68	66	63	59	77	77	70	68	66	62
	1400	72	64	60	59	53	46	75	69	65	63	58	53	77	75	69	67	64	60	78	78	72	69	67	63
12	800	66	58	55	52	50	42	69	63	59	56	55	49	71	69	63	60	59	56	73	72	65	63	62	59
	900	66	59	56	52	51	43	69	64	60	57	55	50	72	70	64	61	60	56	74	73	66	64	63	60
	1000	67	60	57	53	51	44	70	65	61	58	56	51	73	71	65	62	61	57	74	74	67	65	64	61
	1200	68	62	59	55	53	46	71	67	63	59	57	52	74	72	67	64	62	59	76	76	69	66	65	63
	1500	70	64	61	57	54	48	72	69	65	61	59	54	75	75	69	66	64	61	77	78	72	68	67	64
	1800	71	66	63	58	55	49	74	71	67	63	60	56	76	76	71	67	65	62	78	79	74	70	68	66
	2000	71	67	64	59	56	50	74	72	68	64	61	56	77	77	72	68	66	63	79	80	75	70	69	67
14	1000	66	58	55	52	50	42	69	63	59	56	55	49	71	69	63	60	59	56	73	72	65	63	62	59
	1200	66	59	56	52	51	43	69	64	60	57	55	50	72	70	64	61	60	56	74	73	66	64	63	60
	1500	67	60	57	53	51	44	70	65	61	58	56	51	73	71	65	62	61	57	74	74	67	65	64	61
	1800	68	62	59	55	53	46	71	67	63	59	57	52	74	72	67	64	62	59	76	76	69	66	65	63
	2100	70	64	61	57	54	48	72	69	65	61	59	54	75	75	69	66	64	61	77	78	72	68	67	64
	2400	71	66	63	58	55	49	74	71	67	63	60	56	76	76	71	67	65	62	78	79	74	70	68	66
	3000	71	67	64	59	56	50	74	72	68	64	61	56	77	77	72	68	66	63	79	80	75	70	69	67
16	1400	61	54	52	51	49	41	64	58	56	55	53	47	67	62	59	60	58	53	69	64	61	62	60	57
	1600	62	56	54	52	50	42	66	60	57	56	54	48	69	64	61	61	59	54	71	66	62	64	62	58
	2000	65	58	57	54	52	45	68	62	60	58	56	51	71	67	63	63	61	57	73	69	65	65	64	60
	2400	67	61	59	55	53	46	70	65	63	60	58	52	73	69	66	64	62	58	75	71	68	67	65	62
	2800	68	63	61	57	55	48	72	67	65	61	59	54	75	71	68	66	64	60	77	73	70	68	67	63
	3200	70	64	63	58	56	49	73	68	66	62	60	55	76	72	70	67	65	61	78	75	71	69	68	65
	4000	72	67	66	59	58	51	76	71	69	64	62	57	79	75	72	68	67	63	81	78	74	71	70	67
24x16	3000	72	68	66	62	59	54	76	72	71	67	65	60	80	77	75	72	71	66	83	80	78	75	74	69
	3500	73	69	67	63	61	55	78	74	72	68	67	62	82	79	77	73	72	68	84	81	80	76	76	71
	4000	75	71	68	64	62	57	79	75	73	69	68	63	83	80	78	75	74	69	86	82	81	78	77	73
	5000	77	73	71	66	64	59	81	77	76	71	70	65	85	82	81	77	76	72	88	85	83	80	79	75
	6000	79	74	73	68	66	61	83	79	77	73	72	67	87	84	82	78	78	73	90	86	85	81	81	77
	7000	80	76	74	69	68	63	85	80	79	75	73	69	89	85	84	80	79	75	91	88	87	83	83	79
	8000	82	77	75	71	69	64	86	82	80	76	75	71	90	86	85	81	81	77	93	89	88	84	84	80

- ΔPs is the difference in static pressure from inlet to discharge.
- Sound power levels are in decibels, re 10^{-12} watts.
- Discharge sound power is the noise emitted from the unit discharge into the downstream duct.
- All sound data based upon tests conducted in accordance with ARI Standard 880-98.

Performance Data (continued)

PESV, AESV, DESV • Radiated Sound Power

Inlet Size	cfm	Sound Power Octave Bands																							
		0.5″ ΔPs						1.0″ ΔPs						2.0″ ΔPs						3.0″ ΔPs					
		2	3	4	5	6	7	2	3	4	5	6	7	2	3	4	5	6	7	2	3	4	5	6	7
4	75	44	40	33	31	30	24	47	43	36	33	33	29	50	46	39	36	37	35	52	48	41	37	40	38
	125	52	49	39	36	33	27	55	52	42	38	37	32	58	55	45	41	41	38	60	57	47	42	44	41
	175	58	55	42	39	36	29	61	58	46	42	40	34	64	61	49	44	44	40	66	63	51	46	46	43
	225	62	59	45	42	38	31	65	62	49	44	42	36	68	65	52	47	46	41	70	67	54	48	48	45
5	125	47	42	34	31	30	24	51	46	39	34	34	29	55	51	43	38	38	34	57	53	46	40	40	37
	175	51	46	38	34	33	26	55	51	42	37	36	31	59	55	47	41	40	36	61	58	50	43	42	39
	250	55	52	41	37	35	29	59	56	46	40	39	34	63	60	51	44	43	39	65	63	53	46	45	42
	300	58	54	43	39	37	30	62	59	48	42	41	35	65	63	52	45	44	40	68	66	55	47	47	43
	350	60	56	45	40	38	31	63	61	49	43	42	36	67	65	54	47	45	41	70	68	57	49	48	44
6	175	51	42	34	28	27	23	54	47	39	32	31	28	58	52	43	35	35	33	60	55	46	37	38	36
	225	53	45	37	31	30	25	57	50	42	35	34	30	60	55	46	38	38	35	62	58	49	41	40	38
	300	55	49	40	35	32	28	59	54	45	39	37	33	63	59	50	42	41	38	65	62	53	44	43	40
	350	57	52	42	37	34	29	60	57	47	41	38	34	64	62	52	44	42	39	66	65	55	46	44	42
	400	58	53	44	39	35	30	61	58	49	42	39	35	65	63	53	46	43	40	67	66	56	48	46	43
	450	59	55	45	40	36	31	62	60	50	44	40	36	66	65	55	47	45	41	68	68	58	50	47	44
	500	60	56	47	42	37	32	63	62	51	45	41	37	67	67	56	49	46	42	69	69	59	51	48	45
7	250	54	40	36	31	28	20	56	45	41	35	33	26	58	50	47	39	38	32	59	53	50	41	41	35
	300	55	42	38	33	30	21	57	47	43	37	35	27	60	53	49	41	40	33	61	56	52	44	43	36
	350	56	45	39	35	31	22	59	50	45	39	36	28	61	55	50	43	41	34	62	58	53	46	44	37
	400	58	47	41	36	32	23	60	52	46	41	37	29	62	57	52	45	42	35	63	60	55	47	45	38
	500	60	50	43	39	34	24	62	55	49	43	39	30	64	60	54	48	44	36	65	63	57	50	47	40
	600	61	53	45	42	35	25	63	58	51	46	41	31	66	63	56	50	46	37	67	66	59	52	49	41
	650	62	54	46	43	36	26	64	59	52	47	41	32	66	64	57	51	46	38	68	67	60	53	49	41
8	350	54	43	38	33	33	26	57	48	43	37	37	34	60	53	48	41	42	42	62	56	51	43	44	46
	400	55	45	39	35	34	28	58	50	44	39	39	35	61	55	50	42	43	43	63	58	53	44	46	47
	450	56	47	40	36	35	29	59	52	46	40	40	36	63	57	51	44	44	44	64	60	54	46	47	49
	500	57	48	42	38	36	30	60	53	47	41	41	37	63	58	52	45	45	45	65	61	55	47	48	50
	600	59	50	44	40	38	32	62	55	49	43	43	39	65	60	54	47	47	47	67	63	57	49	50	51
	700	60	52	45	42	40	33	63	57	50	45	44	41	67	62	56	49	49	48	68	65	59	51	51	53
	800	62	54	47	43	41	34	65	59	52	47	46	42	68	64	57	51	50	50	69	67	60	53	53	54
9	450	51	40	39	34	30	28	54	46	45	40	36	33	57	52	51	46	43	37	59	56	55	49	46	40
	500	53	42	39	34	31	28	55	48	46	40	37	33	58	54	52	46	43	38	60	57	55	50	47	40
	600	54	44	41	35	32	29	57	50	47	41	38	34	60	56	53	47	45	38	62	59	57	51	48	41
	700	56	46	42	36	33	30	59	52	48	42	39	34	62	58	54	48	46	39	64	61	58	52	50	42
	800	58	47	43	37	34	30	61	53	49	43	40	35	63	59	55	49	47	40	65	63	59	52	50	42
	900	59	49	44	38	35	31	62	55	50	44	41	35	65	61	56	50	48	40	66	64	59	53	51	43
	1000	60	50	44	38	36	31	63	56	50	44	42	36	66	62	57	50	48	40	68	66	60	54	52	43

ARI Certification Rating Points

Inlet Size	Rated cfm	Min ΔPs	Sound Power @ 1.5 IN SP					
			2	3	4	5	6	7
4	150	0.04	60	57	46	41	40	37
5	250	0.03	62	59	49	42	41	37
6	400	0.13	63	61	52	44	42	38
7	550	0.10	64	59	53	47	43	34
8	700	0.02	65	60	53	47	47	45
9	900	0.05	64	58	53	47	45	38
10	1100	0.01	67	62	57	55	54	43
12	1600	0.01	66	62	59	53	50	44
14	2100	0.04	66	62	55	53	50	46
16	2800	0.03	66	61	54	50	50	45
24x16	5300	0.06	79	74	72	68	67	64

Ratings in accordance with ARI Standard 880-98 and certified to ARI.

ARI PERFORMANCE CERTIFIED ™
ARI Standard 880 VAV Terminal
www.aridirectory.org

A Participating Corporation in the ARI 880 Certification Program

Single/Dual Duct Terminals | Performance Data

Performance Data (continued)

PESV, AESV, DESV • Radiated Sound Power

Inlet Size	cfm	Sound Power Octave Bands																							
		0.5″ ΔPs						1.0″ ΔPs						2.0″ ΔPs						3.0″ ΔPs					
		2	3	4	5	6	7	2	3	4	5	6	7	2	3	4	5	6	7	2	3	4	5	6	7
10	550	56	46	45	41	36	24	59	52	51	47	43	31	63	58	57	52	49	38	65	62	60	55	53	43
	600	56	47	46	42	37	25	60	53	51	47	44	32	63	59	57	53	50	39	65	63	61	56	54	44
	700	58	48	46	43	39	27	61	54	52	48	45	34	65	60	58	54	52	41	67	64	61	57	55	45
	800	59	49	47	44	40	28	62	56	53	49	47	35	66	62	59	55	53	42	68	65	62	58	57	47
	1000	60	51	48	46	43	30	64	58	54	51	49	38	67	64	59	56	55	45	69	67	63	59	59	49
	1200	62	53	48	47	45	32	65	59	54	53	51	40	69	65	60	58	57	47	71	69	64	61	61	51
	1400	63	54	49	48	46	34	67	60	55	54	53	41	70	67	61	59	59	49	72	70	64	62	63	53
12	800	56	46	43	37	32	25	59	51	48	43	38	32	63	57	54	50	44	39	65	60	58	53	48	42
	900	56	47	44	38	33	27	60	52	50	44	39	33	64	58	55	51	45	40	66	61	59	54	49	44
	1000	57	48	45	39	34	28	61	54	51	45	40	35	64	59	56	51	47	41	67	62	60	55	50	45
	1200	58	50	47	41	37	30	62	56	52	47	43	37	66	61	58	53	49	43	68	64	62	57	52	47
	1500	60	53	49	43	39	33	64	58	55	49	45	39	67	63	60	55	52	46	69	67	64	58	55	50
	1800	61	55	51	44	41	35	65	60	56	50	48	41	69	65	62	56	54	48	71	69	66	60	57	52
	2000	62	56	52	45	43	36	66	61	57	51	49	43	69	67	63	57	55	49	71	70	67	61	59	53
14	1000	52	47	42	41	37	34	56	52	47	46	42	40	60	57	52	51	47	45	62	60	55	54	50	49
	1200	54	49	43	42	39	35	58	54	48	47	44	40	62	59	54	52	48	46	64	62	57	55	51	49
	1500	56	51	45	43	40	36	60	56	50	48	45	41	64	61	55	53	50	47	66	64	58	56	53	50
	1800	58	52	46	44	41	36	62	57	51	49	46	42	66	63	56	54	51	48	68	65	59	57	54	51
	2100	59	54	47	45	42	37	63	59	52	50	47	43	67	64	57	55	52	48	70	67	60	58	55	52
	2400	60	55	48	46	43	38	64	60	53	51	48	43	69	65	58	56	53	49	71	68	61	59	56	52
	3000	63	57	50	47	44	39	67	62	55	52	49	44	71	67	60	57	54	50	73	70	63	60	57	53
16	1400	50	44	39	38	35	27	54	49	44	41	40	34	58	54	48	45	45	41	61	56	51	48	48	44
	1600	52	46	40	39	37	28	56	50	45	43	42	35	60	55	50	47	46	42	63	58	52	49	49	46
	2000	55	48	43	41	39	31	59	53	47	45	44	38	63	58	52	49	49	44	65	61	55	51	52	48
	2400	57	51	45	43	41	33	61	56	49	47	46	39	65	61	54	51	51	46	68	64	57	53	53	50
	2800	59	53	46	44	42	34	63	58	51	48	47	41	67	63	56	52	52	48	70	66	58	54	55	52
	3200	61	55	48	46	44	36	65	60	52	50	49	42	69	64	57	53	54	49	71	67	60	56	56	53
	4000	63	58	50	48	46	38	68	62	55	52	51	45	72	67	59	56	56	52	74	70	62	58	59	55
24x16	3000	65	63	62	56	54	50	68	64	63	58	56	53	70	66	64	59	58	56	71	67	65	60	59	58
	3500	67	65	65	59	56	51	69	66	66	60	58	54	72	68	67	61	60	57	73	69	68	62	61	59
	4000	69	67	67	61	57	52	71	68	68	62	59	55	73	70	69	64	61	58	75	71	70	64	62	60
	5000	72	70	71	65	59	53	74	71	72	66	61	56	76	73	73	67	63	59	77	74	74	68	64	61
	6000	74	72	74	68	61	54	76	74	75	69	63	57	78	75	76	70	65	60	80	76	77	71	66	62
	7000	76	74	77	70	63	55	78	76	78	72	65	58	80	77	79	73	67	61	81	78	80	74	68	62
	8000	78	76	79	73	64	55	80	77	80	74	66	58	82	79	81	75	68	61	83	80	82	76	69	63

- ΔPs is the difference in static pressure from inlet to discharge.
- Sound power levels are in decibels, re 10^{-12} watts.
- Radiated sound power is the noise transmitted through casing walls.
- All sound data based upon tests conducted in accordance with ARI Standard 880-98.

Performance Data (continued)

PESV, AESV, DESV • Hot Water Coil Capacity, MBH • 1- and 2-Row

	Rows/ Circuits	gpm	Head Loss	Airflow, cfm								
Sizes 4-5-6				50	100	150	200	250	300	350	400	450
	One-Row Single Circuit	1.0	0.50	4.2	5.9	7.0	7.7	8.6	9.4	10.1	10.6	11.2
		2.0	1.69	4.4	6.3	7.5	8.3	9.4	10.3	11.1	11.8	12.5
		4.0	5.77	4.4	6.5	7.8	8.7	9.8	10.9	11.8	12.6	13.4
		5.0	8.59	4.5	6.5	7.8	8.8	9.9	11.0	11.9	12.8	13.6
		Airside Δ Ps		0.01	0.01	0.02	0.03	0.05	0.07	0.09	0.12	0.14
	Two-Row Multi-Circuit	1.0	0.24	5.3	8.6	11.0	12.9	14.4	15.6	16.7	17.6	18.4
		3.0	1.66	5.5	9.4	12.5	15.0	17.1	19.0	20.7	22.2	23.5
		5.0	4.06	5.6	9.6	12.8	15.5	17.9	19.9	21.8	23.5	25.0
		7.0	7.39	5.6	9.7	13.0	15.8	18.2	20.4	22.3	24.1	25.7
		Airside ΔPs		0.01	0.02	0.04	0.07	0.10	0.13	0.18	0.22	0.27

	Rows/ Circuits	gpm	Head Loss	Airflow, cfm								
Sizes 7-8				100	200	300	400	500	600	700	800	900
	One-Row Single Circuit	1.0	0.69	6.9	9.2	10.7	12.2	13.4	14.5	15.3	16.1	16.8
		2.0	2.34	7.2	9.9	11.7	13.6	15.1	16.4	17.6	18.6	19.5
		3.0	4.77	7.4	10.2	12.1	14.1	15.8	17.2	18.5	19.6	20.7
		4.0	7.96	7.4	10.3	12.3	14.4	16.1	17.7	19.0	20.2	21.3
		Airside ΔPs		0.01	0.02	0.04	0.07	0.10	0.14	0.19	0.24	0.30
	Two-Row Multi-Circuit	1.0	0.33	9.4	14.3	17.6	20.1	21.9	23.4	24.7	25.7	26.6
		3.0	2.32	10.1	16.5	21.2	25.0	28.1	30.8	33.1	35.1	37.0
		5.0	5.66	10.3	17.0	22.2	26.3	29.9	32.9	35.6	38.0	40.2
		7.0	10.28	10.3	17.2	22.6	27.0	30.7	34.0	36.9	39.5	41.8
		Airside ΔPs		0.01	0.04	0.08	0.13	0.20	0.27	0.36	0.46	0.56

	Rows/ Circuits	gpm	Head Loss	Airflow, cfm								
Sizes 9-10				200	300	400	500	600	700	800	900	1000
	One-Row Multi-Circuit	2.0	0.68	11.7	13.8	15.3	17.0	18.5	19.8	21.0	22.0	23.0
		3.0	1.40	12.1	14.4	16.0	18.0	19.7	21.2	22.5	23.7	24.8
		5.0	3.41	12.5	15.0	16.7	18.9	20.8	22.4	23.9	25.3	26.6
		6.0	4.72	12.6	15.1	16.9	19.1	21.1	22.8	24.3	25.8	27.1
		Airside ΔPs		0.01	0.02	0.04	0.05	0.07	0.10	0.12	0.15	0.18
	Two-Row Multi-Circuit	2.0	0.65	17.4	22.4	26.3	29.5	32.1	34.4	36.3	38.1	39.6
		4.0	2.19	18.5	24.3	29.0	33.0	36.5	39.6	42.3	44.7	46.9
		6.0	4.43	18.8	25.0	30.1	34.5	38.3	41.7	44.8	47.6	50.1
		8.0	7.35	19.0	25.4	30.7	35.3	39.3	42.9	46.2	49.2	51.9
		Airside ΔPs		0.02	0.04	0.07	0.10	0.14	0.18	0.23	0.29	0.35

	Rows/ Circuits	gpm	Head Loss	Airflow, cfm								
Size 12				300	500	700	900	1100	1300	1500	1700	1900
	One-Row Multi-Circuit	2.0	0.88	14.7	17.3	19.6	21.4	22.9	24.1	25.2	26.0	26.8
		3.0	1.81	16.4	19.9	23.0	25.7	28.0	29.9	31.5	32.9	34.2
		5.0	4.40	17.5	21.6	25.4	28.7	31.6	34.0	36.2	38.1	39.9
		6.0	6.08	17.9	22.3	26.3	29.9	33.0	35.8	38.2	40.3	42.3
		Airside ΔPs		0.01	0.03	0.06	0.09	0.12	0.17	0.21	0.27	0.33
	Two-Row Multi-Circuit	2.0	0.84	21.7	27.5	31.1	33.7	35.6	37.1	38.3	39.3	40.2
		4.0	2.79	26.0	35.7	42.8	48.5	53.0	56.9	60.2	63.1	65.6
		6.0	5.63	27.1	37.9	46.3	53.0	58.7	63.6	67.8	71.6	75.0
		8.0	9.33	27.6	39.0	47.9	55.3	61.6	67.0	71.8	76.1	79.9
		Airside ΔPs		0.02	0.06	0.11	0.16	0.23	0.32	0.41	0.51	0.62

Single/Dual Duct Terminals | Performance Data

Performance Data (continued)

PESV, AESV, DESV • Hot Water Coil Capacity, MBH • 1- and 2-Row

	Rows/ Circuits	gpm	Head Loss	Airflow, cfm								
Size 14				400	700	1000	1300	1600	1900	2200	2500	2800
	One-Row Multi-Circuit	2.0	0.45	21.9	26.8	30.7	34.2	36.9	39.2	41.1	42.8	44.3
		3.0	0.95	23.2	28.8	33.4	37.5	40.9	43.8	46.3	48.4	50.3
		5.0	2.31	24.3	30.6	36.0	40.9	45.0	48.5	51.6	54.3	56.7
		6.0	3.17	24.6	31.1	36.7	41.8	46.1	49.8	53.1	56.0	58.6
		Airside ΔPs		0.01	0.03	0.05	0.08	0.12	0.17	0.21	0.27	0.33
	Two-Row Multi-Circuit	2.0	0.56	32.5	43.9	51.4	56.8	60.9	64.2	66.8	69.1	71.0
		4.0	1.94	35.6	50.5	61.3	69.7	76.4	82.0	86.8	90.9	94.5
		6.0	3.89	36.8	53.2	65.5	75.3	83.4	90.3	96.3	101.5	106.1
		8.0	6.40	37.4	54.6	67.8	78.5	87.4	95.1	101.8	107.8	113.1
		Airside ΔPs		0.02	0.05	0.10	0.16	0.23	0.31	0.41	0.51	0.63
Size 16	Rows/ Circuits	gpm	Head Loss	Airflow, cfm								
				600	1000	1400	1800	2200	2600	3000	3400	3800
	One-Row Multi-Circuit	3.0	0.98	30.1	36.2	42.1	46.8	50.6	53.8	56.5	58.9	61.0
		5.0	2.44	31.9	38.9	46.0	51.7	56.4	60.4	63.9	67.1	69.8
		7.0	4.38	32.7	40.3	47.9	54.1	59.4	63.9	67.9	71.4	74.6
		9.0	6.83	33.2	41.1	49.1	55.6	61.2	66.0	70.3	74.1	77.5
		Airside ΔPs		0.02	0.04	0.07	0.11	0.16	0.21	0.27	0.34	0.41
	Two-Row Multi-Circuit	3.0	0.50	45.4	59.2	68.5	75.3	80.7	85.0	88.5	91.5	94.1
		5.0	1.26	49.1	66.1	78.4	87.9	95.5	101.9	107.2	111.9	115.9
		7.0	2.25	50.8	69.6	83.6	94.6	103.7	111.4	118.0	123.7	128.8
		9.0	3.46	51.8	71.7	86.8	98.9	108.9	117.5	125.0	131.5	137.3
		Airside ΔPs		0.03	0.07	0.13	0.21	0.30	0.40	0.51	0.64	0.78
Size 24 x 16	Rows/ Circuits	gpm	Head Loss	Airflow, cfm								
				600	1200	1800	2400	3000	3600	4200	4800	5400
	One-Row Multi-Circuit	3.0	1.15	38.0	49.5	57.4	64.5	70.1	74.7	78.5	81.8	84.7
		5.0	2.90	40.3	53.8	63.4	72.4	79.8	85.9	91.1	95.7	99.7
		7.0	5.20	41.3	55.9	66.5	76.5	84.8	91.8	97.8	103.2	107.9
		9.0	8.08	41.9	57.1	68.3	79.0	87.8	95.4	102.0	107.9	113.1
		Airside ΔPs		0.01	0.02	0.05	0.08	0.12	0.17	0.22	0.27	0.34
	Two-Row Multi-Circuit	3.0	0.56	52.2	76.1	90.4	100.1	107.2	112.7	117.0	120.6	123.6
		5.0	1.41	55.9	85.8	105.6	120.0	131.2	140.1	147.5	153.7	159.0
		7.0	2.51	57.6	90.6	113.5	130.8	144.6	155.9	165.4	173.5	180.6
		9.0	3.86	58.6	93.5	118.4	137.6	153.2	166.1	177.2	186.7	195.1
		Airside ΔPs		0.01	0.04	0.09	0.15	0.23	0.31	0.41	0.52	0.64

- Hot water capacities are in MBH.
- Data are based upon 180°F entering water and 55°F entering air.
- Head loss is in feet of water.
- Tables are based upon a temperature difference of 125°F between entering air and entering water. For other temperature differences, multiply MBH values by factors below.
- Water enters at lower coil connection to prevent air entrapment.
- Air temperature rise = 927 x MBH/cfm.
- Water temperature drop = 2.04 x MBH/gpm.
- Connection: Single circuit, ½-inch O.D. male solder.
- Multi-circuit, ⅞-inch O.D. male solder.
- Coils are not for steam application.
- gpms below minimum values listed may be in laminar flow range, reducing coil performance. Contact your Titus representative for more information.

Correction Factors for Other Entering Conditions

Δ T	50	60	70	80	90	100	110	125	140	150
Factor	0.40	0.48	0.56	0.64	0.72	0.80	0.88	1.00	1.12	1.20

Note: Airside ΔPs reflects the air pressure drop of the hot water coil.

Performance Data (continued)

PESV, AESV, DESV • Hot Water Coil Capacity, MBH • 3- and 4-Row

	Rows/ Circuits	gpm	Head Loss	Airflow, cfm								
Sizes 4-5-6				50	100	150	200	250	300	350	400	450
	Three-Row Multi-Circuit	2.0	1.31	6.2	11.0	14.9	18.1	20.9	23.3	25.4	27.3	28.9
		3.0	2.63	6.2	11.2	15.3	18.8	21.9	24.5	26.9	29.1	31.0
		5.0	6.43	6.3	11.4	15.7	19.4	22.7	25.6	28.3	30.7	32.9
		6.0	8.88	6.3	11.4	15.8	19.6	22.9	25.9	28.7	31.2	33.5
		Airside ΔPs		0.01	0.03	0.06	0.10	0.14	0.20	0.26	0.33	0.40
	Four-Row Multi-Circuit	3.0	1.59	6.5	12.1	16.9	21.1	24.7	27.9	30.7	33.3	35.6
		4.0	2.61	6.5	12.2	17.2	21.5	25.3	28.7	31.8	34.6	37.2
		6.0	5.28	6.5	12.3	17.4	21.9	26.0	29.6	33.0	36.0	38.8
		8.0	8.77	6.5	12.4	17.5	22.2	26.3	30.1	33.6	36.8	39.8
		Airside ΔPs		0.01	0.04	0.08	0.13	0.19	0.26	0.34	0.43	0.53
Sizes 7-8	Rows/ Circuits	gpm	Head Loss	Airflow, cfm								
				100	200	300	400	500	600	700	800	900
	Three-Row Multi-Circuit	2.0	0.79	11.5	19.2	24.8	29.2	32.7	35.6	38.1	40.2	42.0
		4.0	2.63	11.8	20.3	27.0	32.5	37.0	41.0	44.4	47.4	50.1
		6.0	5.31	11.9	20.8	27.9	33.7	38.8	43.2	47.0	50.5	53.6
		8.0	8.80	11.9	21.0	28.3	34.4	39.7	44.4	48.5	52.2	55.6
		Airside ΔPs		0.02	0.06	0.12	0.20	0.29	0.40	0.53	0.67	0.83
	Four-Row Multi-Circuit	4.0	2.04	12.6	22.6	30.6	37.2	42.7	47.5	51.7	55.3	58.6
		6.0	4.12	12.7	23.0	31.5	38.7	44.9	50.3	55.0	59.3	63.2
		8.0	6.79	12.7	23.2	32.0	39.5	46.0	51.8	56.9	61.6	65.8
		10.0	10.04	12.7	23.4	32.3	40.0	46.8	52.8	58.1	63.0	67.5
		Airside ΔPs		0.02	0.08	0.16	0.26	0.39	0.53	0.70	0.89	1.10
Sizes 9-10	Rows/ Circuits	gpm	Head Loss	Airflow, cfm								
				200	300	400	500	600	700	800	900	1000
	Three-Row Multi-Circuit	3.0	1.18	21.5	28.8	34.7	39.7	43.9	47.5	50.8	53.6	56.2
		5.0	2.85	22.1	30.1	36.8	42.5	47.6	52.0	56.0	59.6	62.9
		7.0	5.11	22.4	30.7	37.8	43.9	49.4	54.3	58.7	62.7	66.4
		9.0	7.92	22.6	31.1	38.3	44.7	50.4	55.6	60.3	64.5	68.5
		Airside ΔPs		0.03	0.06	0.10	0.15	0.21	0.27	0.34	0.42	0.51
	Four-Row Multi-Circuit	4.0	1.72	23.9	33.0	40.7	47.3	53.0	58.0	62.5	66.5	70.1
		5.0	2.53	24.1	33.5	41.6	48.6	54.7	60.2	65.1	69.5	73.5
		8.0	5.71	24.4	34.3	43.0	50.6	57.5	63.7	69.4	74.5	79.3
		10.0	8.41	24.6	34.6	43.5	51.4	58.5	65.0	70.9	76.4	81.5
		Airside ΔPs		0.04	0.08	0.13	0.20	0.27	0.36	0.46	0.56	0.68
Size 12	Rows/ Circuits	gpm	Head Loss	Airflow, cfm								
				300	500	700	900	1100	1300	1500	1700	1900
	Three-Row Multi-Circuit	3.0	1.50	29.7	40.6	48.3	53.9	58.4	61.9	64.8	67.3	69.4
		4.0	2.46	31.9	45.6	56.2	64.6	71.6	77.4	82.5	86.8	90.7
		6.0	4.94	32.6	47.5	59.3	69.0	77.2	84.3	90.5	95.9	100.8
		8.0	8.14	33.0	48.5	61.0	71.4	80.4	88.2	95.0	101.2	106.7
		Airside ΔPs		0.03	0.09	0.16	0.24	0.35	0.47	0.60	0.75	0.91
	Four-Row Multi-Circuit	4.5	2.67	35.2	52.0	65.3	76.0	84.9	92.4	98.8	104.4	109.4
		5.0	3.20	35.4	52.6	66.2	77.4	86.7	94.7	101.5	107.5	112.8
		7.0	5.71	36.1	54.5	69.7	82.5	93.5	103.2	111.7	119.3	126.1
		9.0	8.81	36.3	55.1	70.9	84.3	96.0	106.3	115.5	123.7	131.2
		Airside ΔPs		0.05	0.11	0.21	0.32	0.46	0.61	0.79	0.99	1.20

Single/Dual Duct Terminals | Performance Data

Performance Data (continued)

PESV, AESV, DESV • Hot Water Coil Capacity, MBH • 3- and 4-Row

	Rows/ Circuits	gpm	Head Loss	Airflow, cfm								
Size 14				400	700	1000	1300	1600	1900	2200	2500	2800
	Three-Row Multi-Circuit	4.0	1.95	42.5	62.2	76.5	87.5	96.3	103.5	109.5	114.7	119.1
		5.0	2.87	43.2	64.2	79.9	92.2	102.2	110.5	117.6	123.7	129.0
		6.0	3.93	43.7	65.6	82.2	95.5	106.4	115.6	123.5	130.4	136.5
		8.0	6.44	44.4	67.3	85.3	99.9	112.2	122.7	131.8	139.9	147.0
		Airside ΔPs		0.03	0.08	0.15	0.24	0.34	0.46	0.60	0.75	0.92
	Four-Row Multi-Circuit	6.0	2.77	47.6	73.2	93.0	108.8	121.8	132.6	141.8	149.7	156.7
		6.0	2.77	47.6	73.2	93.0	108.8	121.8	132.6	141.8	149.7	156.7
		8.0	4.55	48.2	75.2	96.7	114.3	129.1	141.7	152.6	162.1	170.5
		10.0	6.67	48.6	76.4	99.0	117.9	133.9	147.7	159.7	170.4	180.0
		Airside ΔPs		0.04	0.10	0.20	0.31	0.45	0.61	0.79	1.00	1.22
Size 16	Rows/ Circuits	gpm	Head Loss	Airflow, cfm								
				600	1000	1400	1800	2200	2600	3000	3400	3800
	Three-Row Multi-Circuit	6.0	1.54	60.4	84.3	101.8	115.5	126.4	135.5	143.1	149.7	155.5
		8.0	2.54	61.9	87.8	107.4	123.0	135.9	146.7	155.9	164.0	171.0
		10.0	3.73	62.9	90.0	111.1	128.1	142.2	154.3	164.7	173.8	182.0
		12.0	5.10	63.5	91.6	113.7	131.7	146.8	159.8	171.1	181.1	190.0
		Airside ΔPs		0.04	0.11	0.20	0.31	0.44	0.59	0.76	0.94	1.15
	Four-Row Multi-Circuit	9.0	2.79	68.9	100.8	125.6	145.5	161.9	175.8	187.7	198.0	207.0
		10.0	3.34	69.3	101.9	127.5	148.3	165.6	180.2	192.8	203.9	213.6
		11.0	3.94	69.7	102.9	129.2	150.7	168.6	184.0	197.3	208.9	219.2
		12.0	4.57	69.9	103.6	130.5	152.7	171.3	187.2	201.1	213.3	224.2
		Airside ΔPs		0.06	0.14	0.26	0.40	0.58	0.78	1.00	1.25	1.52
Size 24 x 16	Rows/ Circuits	gpm	Head Loss	Airflow, cfm								
				600	1200	1800	2400	3000	3600	4200	4800	5400
	Three-Row Multi-Circuit	6.0	1.69	66.6	107.8	135.8	156.2	171.9	184.4	194.6	203.2	210.4
		8.0	2.78	67.9	112.5	144.3	168.4	187.5	203.0	216.0	227.0	236.6
		10.0	4.08	68.7	115.4	149.8	176.4	197.9	215.7	230.8	243.8	255.1
		12.0	5.57	69.3	117.4	153.6	182.1	205.4	225.0	241.7	256.2	269.0
		Airside ΔPs		0.02	0.07	0.14	0.23	0.33	0.46	0.61	0.77	0.95
	Four-Row Multi-Circuit	9.0	3.01	73.7	127.6	167.4	198.0	222.2	242.0	258.4	272.3	284.3
		10.0	3.61	74.0	129.0	170.3	202.4	228.2	249.4	267.2	282.4	295.5
		11.0	4.25	74.3	130.2	172.7	206.1	233.2	255.7	274.7	291.0	305.1
		12.0	4.93	74.5	131.1	174.7	209.3	237.6	261.2	281.2	298.5	313.6
		Airside ΔPs		0.03	0.09	0.18	0.30	0.44	0.61	0.80	1.02	1.25

- Hot water capacities are in MBH.
- Data are based upon 180°F entering water and 55°F entering air.
- Head loss is in feet of water.
- Tables are based upon a temperature difference of 125°F between entering air and entering water. For other temperature differences, multiply MBH values by factors below.
- Water enters at lower coil connection to prevent air entrapment.
- Air temperature rise = 927 x MBH/cfm.
- Water temperature drop = 2.04 x MBH/gpm.
- Connection: Single circuit, ½-inch O.D. male solder.
- Multi-circuit, ⅞-inch O.D. male solder.
- Coils are not for steam application.
- gpms below minimum values listed may be in laminar flow range, reducing coil performance. Contact your Titus representative for more information.

Correction Factors for Other Entering Conditions

Δ T	50	60	70	80	90	100	110	125	140	150
Factor	0.40	0.48	0.56	0.64	0.72	0.80	0.88	1.00	1.12	1.20

Note: Airside ΔPs reflects the air pressure drop of the hot water coil.

Suggested Specifications

ESV Basic Unit

See Section S for control specifications.

1. Furnish and install Titus Model (P)(A)(D) ESV single duct, variable air volume terminals of the sizes and capacities shown in the plans.
2. Terminals shall be certified under the ARI Standard 880 Certification Program and carry the ARI Seal. Noncertified terminals may be submitted after testing at an independent testing laboratory under conditions selected by the engineering consultant in full compliance with ARI Standard 880. These tests must be witnessed by the engineering consultant with all costs to be borne by the terminal manufacturer. Testing does not ensure acceptance.
3. The terminal casing shall be minimum 22-gauge galvanized steel, internally lined with ½-inch dual density insulation which complies with UL 181 and NFPA 90A. All exposed insulation edges shall be coated with NFPA 90A approved sealant to prevent entrainment of fibers in the airstream. The discharge connection shall be slip and drive construction for attachment to metal ductwork. The casing shall be constructed to hold leakage to the maximum values shown in the Casing Leakage table.
4. The damper shall be heavy gauge steel with shaft rotating in Delrin® self-lubricating bearings. Nylon bearings are not acceptable. Shaft shall be clearly marked on the end to indicate damper position. Stickers or other removable markings are not acceptable. The damper shall incorporate a mechanical stop to prevent overstroking and a synthetic seal to limit close-off leakage to the maximum values shown in the Damper Leakage table.
5. Actuators shall be capable of supplying at least 35-inch lbs. of torque to the damper shaft and shall be mounted externally for service access. Terminals with internal actuator mounting or linkage connection must include gasketed access panel, removable without disturbing ductwork. Casing with access panel shall be constructed to hold leakage to the maximum values shown in the Casing Leakage table.
6. At an inlet velocity of 2000 fpm, the minumum static pressure required to operate any terminal size shall not exceed 0.13-inch wg for the basic terminal.
7. Sound ratings for the terminal shall not exceed ____ NC at ____ static pressure. Sound performance shall be ARI certified.

Accessories

Hot Water Reheat Coils

1. Hot water reheat coils shall be enclosed in a minimum 20-gauge galvanized steel casing with slip and drive construction for attachment to metal ductwork. Coils shall be factory installed on the terminal discharge. Fins shall be rippled and corrugated heavy gauge aluminum, mechanically bonded to tubes. Tubes shall be copper with minimum wall thickness of 0.016-inch with male solder header connections. Coils shall be leak tested to 300 psi with minimum burst pressure of 1800 psi at ambient temperature. Number of coil rows and circuits shall be selected to provide performance as required per the plans. Coil performance data shall be based on tests run in accordance with ARI Standard 410.

Electric Reheat Coils

(Available on pressure independent terminals only)

1. Electric coils shall be supplied and installed on the terminal by the terminal manufacturer. Coils shall be ETL listed. Coils shall be housed in an attenuator section integral with the terminal with element grid recessed from unit discharge a minimum of 5 inches to prevent damage to elements during shipping and installation. Elements shall be 80/20 nickel chrome, supported by ceramic isolators a maximum of 3.5 inches apart, staggered for maximum thermal transfer and element life and balanced to ensure equal output per step. The integral control panel shall be housed in a NEMA 1 enclosure with hinged access door for access to all controls and safety devices.
2. Electric coils shall contain a primary automatic reset thermal cutout, a secondary manual reset thermal cutout, differential pressure airflow switch for proof of flow, and line terminal block. Unit shall include an optional integral door interlock type disconnect switch that will not allow the access door to be opened while power is on. Non-interlocking type disconnects are not acceptable. All individual components shall be UL listed or recognized.
3. (Optional) Electric coils shall include line fusing, mercury contactors mounted and wired within the control enclosure.

Optional Lynergy Electric Heat

1. Proportional electric coils shall be supplied and installed on the terminal by the terminal manufacturer. Coils shall be ETL listed. Coils shall be housed in an attenuator section integral with the terminal with element grid recessed from unit discharge a minimum of 5 inches to prevent damage to elements during shipping and installation. Elements shall be 80/20 nickel chrome, supported by ceramic isolators a maximum of 3½ inches apart, staggered for maximum thermal transfer and element life, and balanced to ensure equal output per step. The integral control panel shall be housed in a NEMA 1 enclosure with hinged access door for access to all controls and safety devices.
2. Electric coils shall contain a primary automatic reset thermal cutout, a secondary replaceable heat limiter per element, differential pressure airflow switch for proof of flow, and line terminal block. Coil shall include an integral door interlock type disconnect switch, which will not allow the access door to be opened while power is on. Non-interlocking type disconnects are not acceptable. All individual components shall be UL listed or recognized.
3. Heaters shall be equipped with a Lynergy Comfort Controller to control heater coil firing. The control panel shall include an interface to control heater coil firing in proportion to the ATC signal. The ATC signal shall connect to low voltage universal signal interface circuitry supplied and installed by the terminal manufacturer. The universal interface shall allow at least the following seven interface options without additional interface circuitry.

Suggested Specifications (continued)

Optional Lynergy Electric Heat (continued)

3. ATC equipment providers with 0-20mA or 4-20mA signals shall supply and install a suitable dropping resistor to convert the current signal to a 0-10VDC signal or 2-10VDC signals:

   - PWM heat
   - 2 stage heat
   - 0-10V / 0-20mA
   - 2-10V /4-20mA
   - Incremental T-stat
   - Binary
   - 3 point floating

4. A downstream air temperature limit and control shall be automatically invoked by adding a downstream air temperature sensor. When invoked, the downstream air from the heater shall not exceed an adjustable maximum temperature set point. When the ATC's call for heat is less than 100%, the heater shall control the downstream air temperature to a point in proportion to the span between the heater's probable entering air temperature and the maximum air temperature set point.

Optional Standard SCR Electric Heat

1. Proportional, modulating electric coils shall be supplied and installed on the terminal by the terminal manufacturer. Coils shall be ETL listed. Coils shall be housed in an attenuator section integral with the terminal with element grid recessed from unit discharge a minimum of 5 inches to prevent damage to elements during shipping and installation. Elements shall be 80/20 nickel chrome, supported by ceramic isolators a maximum of 3.5 inches apart, staggered for maximum thermal transfer and element life, and balanced to ensure equal output per step. The integral control panel shall be housed in a NEMA 1 enclosure with hinged access door for access to all controls and safety devices.
2. Electric coils shall contain a primary automatic reset thermal cutout, a secondary manual reset thermal cutout, proportional electronic airflow sensor for proof of flow, and line terminal block. The proportional electronic airflow sensor shall be totally independent of the duct static pressure and shall adjust the heater capacity according to the available airflow. The heaters shall deliver maximum heating when needed with normal minimum airflow, reduce heating with lower than minimum airflow and stop heating with no airflow. Unit shall include an integral door interlock type disconnect switch which will not allow the access door to be opened while power is on. Non-interlocking type disconnects are not acceptable. All individual components shall be UL listed or recognized.
3. Heaters shall be equipped with a proportional SCR controller to modulate the heater load according to the temperature control signal. The electronic controller shall be compatible with the following input signals:

   - Variable voltage signal 0-10 VDC
   - Pulse width modulation AC or DC

Fibre-Free Liner

(Substitute the following paragraph 3 for paragraph 3 in the ESV Basic Unit Specification.)

3. The terminal casing shall be minimum 22-gauge galvanized steel, internally lined with engineered polymer foam insulation which complies to UL181 and NFPA 90A. Insulation shall be 1½ pound density, closed cell foam. Exposed fiberglass is not acceptable. The insulation shall be mechanically fastened to the unit casing. The casing shall be constructed to hold leakage to the maximum values shown in the Casing Leakage table.

Casing Leakage

Inlet Size	Casing Leakage, cfm		
	0.25" ΔPs	0.5" ΔPs	1.0" ΔPs
4, 5, 6	2	3	3
7, 8	3	3	5
9, 10	3	4	6
12	4	5	7
14	4	6	9
16	5	7	10

Damper Leakage

Inlet Size	Damper Leakage, cfm		
	1.5" ΔPs	3.0" ΔPs	6.0" ΔPs
4, 5, 6	4	5	7
7, 8	4	5	7
9, 10	4	5	7
12	4	5	7
14	4	6	8
16	5	7	9

Steri-Loc Liner

(Substitute the following paragraph 3 for paragraph 3 in the ESV Basic Unit Specification.)

3. The terminal casing shall be minimum 22-gauge galvanized steel, internally lined with a non-porous, sealed liner which complies with UL 181 and NFPA 90A. Insulation shall be 4 lb. density. All cut edges must be sealed from the airstream using mechanically bonded metal barrier strips. Liners made of Mylar, Tedlar, Silane or woven fiberglass cloth are not acceptable. Insulation shall be equivalent to Titus Steri-Loc or double wall lining is acceptable. The casing shall be constructed to hold leakage to the maximum values shown in the Casing Leakage table.

UltraLoc Liner

(Substitute the following paragraph 3 for paragraph 3 in the ESV Basic Unit Specification.)

3. The terminal casing shall be minimum 22-gauge galvanized steel. The units shall be lined with 1-inch thick matte faced insulation, meeting UL 181 and NFPA 90A, enclosed between the unit casing and a non-perforated internal 22-gauge sheet metal cover extending over the fiberglass insulation, as well as covering the liner cut edges. The discharge connection shall be slip and drive construction for attachment to metal ductwork. The casing shall be constructed to hold leakage to the maximum values shown in the Casing Leakage table.

Single/Dual Duct Terminals | Specifications

Model Number Specification

X	ESV	X	X	X	XX	XXX
P Pneumatic E Electric A Analog Electric D Digital Electric	Model: Single Duct Variable Volume	1 No Inlet Sensor 3 AeroCross™ Sensor	0 Base Unit 1 with Integral Attenuator 3 with Electric Coil Attenuator Section	0 Standard ½" 1 1" 2 Steri-Loc™ 4 UltraLoc 6 No Liner 9 Fibre-Free Lining Type	Casing Configuration 0R Right Hand 0L Left Hand	Inlet Size (specify)

Example: AESV 3120R 16

Analog electronically controlled single duct variable volume terminal, with multi-point sensor, integral attenuator, Steri-Loc™ lining, right hand controls, 16" inlet size.

DESV

Single Duct Terminal Unit
Direct Digital Control, Pressure Independent

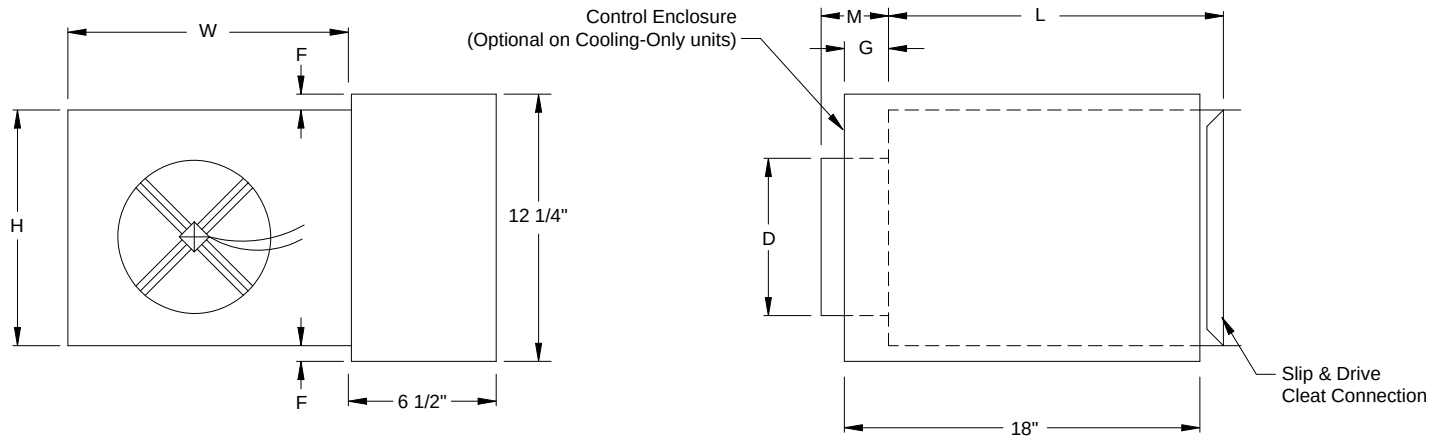

Right hand unit shown. All dimensions are in inches.

Inlet Size	CFM Range	D	F	G	H	L	M	W
4	0-225	3 7/8	2 1/8	7 3/8	8	15 1/2	5 3/8	12
5	0-350	4 7/8	2 1/8	7 3/8	8	15 1/2	5 3/8	12
6	0-500	5 7/8	2 1/8	7 3/8	8	15 1/2	3 3/8	12
7	0-650	6 7/8	1 1/8	7 3/8	10	15 1/2	3 3/8	12
8	0-900	7 7/8	1 1/8	7 3/8	10	15 1/2	3 3/8	12
9	0-1050	8 7/8	-	5 3/8	12 1/2	15 1/2	3 3/8	14
10	0-1400	9 7/8	-	5 3/8	12 1/2	15 1/2	3 3/8	14
12	0-2000	11 7/8	-	5 3/8	15	15 1/2	3 3/8	16
14	0-3000	13 7/8	-	3 3/8	17 1/2	15 1/2	3 3/8	20
16	0-4000	15 7/8	-	3 3/8	18	15 1/2	3 3/8	24
24 x 16	0-8000	23 7/8 x 15 7/8	1 1/8	5 3/8	18	15	3 3/8	38

Accessories (Optional)

Check ☑ if provided.

- ☐ 24 V Control Transformer
- ☐ Dust Tight Enclosure Seal
- ☐ Fibre Free Liner
- ☐ SteriLoc Liner
- ☐ UltraLoc Liner
- ☐ 1" Fiberglass Liner
- ☐ ½" EcoShield Liner
- ☐ 1" EcoShield Liner
- ☐ ½" EcoShield Liner (Foil Face)
- ☐ 1" EcoShield Liner (Foil Face)
- ☐ Disconnect Switch
- ☐ Hanger Brackets
- ☐ Removable Air Flow Sensor
- ☐ Bottom Access Door
- ☐ _____

General Description

- Heavy gauge steel housing. Mechanically sealed and gasketed, leak resistant construction. Less than 2% of nominal cfm at 1.5" sp wg.
- Dual density internal insulation, treated to resist air erosion. Meets requirements of NFPA 90A and UL 181.
- Rectangular discharge opening is designed for slip and drive cleat duct connection.
- Multipoint center averaging inlet velocity sensor.
- Digital control packages can be factory mounted by Titus.
- Choice of right hand or left hand control location.
- Model DESV can be installed horizontally, vertically, or at any angle. Operation is not affected by position.
- Gauge tees for cfm measurement.
-

Accessories (Optional)

☐ Hot Water Coil Section

- 1/2" copper tubes
- Aluminum ripple fins, 10 per inch
- Connections: Single circuit, 1/2" O.D. male solder. Multi-circuit, 7/8" O.D., male solder.
- Coil is installed at discharge of unit.
- On units with attenuators, coil are installed at the discharge of attenuator.

☐ 1 Row
☐ 2 Row
☐ 3 Row
☐ 4 Row

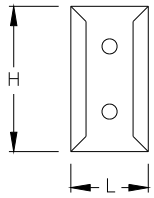

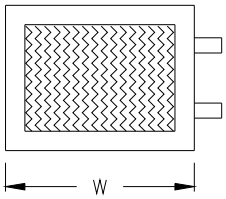

☐ Electric Coil Section ☐ Optional SCR Controlled Electric Heater ☐ Optional Lynergy Controlled Electric Heater

Standard Features

- Single side access to low voltage, high voltage, and electric heater controls.
- Automatic reset thermal cutouts, one per element
- Manual reset secondary protection.
- Positive pressure flow switch
- Magnetic contactor for each step.
- Slip and drive cleat discharge duct connection.

Options

☐ Fuse Block
☐ Disconnect switch, door interlock type
☐ Dust tight construction
☐ Mercury contactors

Supply Voltage

☐ 208V, 1 ph, 60Hz
☐ 240V, 1 ph, 60Hz
☐ 277V, 1 ph, 60Hz
☐ 208V, 3 ph, 60Hz
☐ 480V, 3 ph, 60Hz (4 wire wye standard)

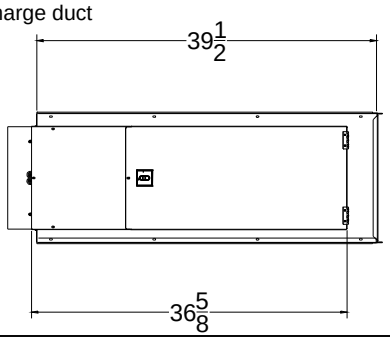

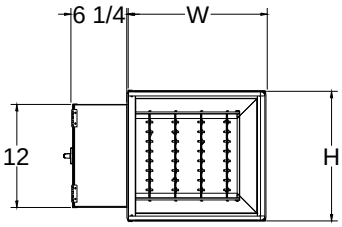

☐ Integral Sound Attenuator

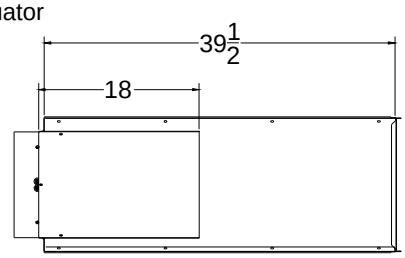

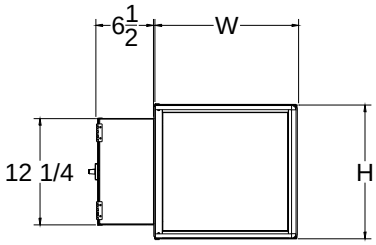

Inlet Size	H	W	Water Coil	
			L (1-2 Row)	L (3-4 Row)
4	8	12	5	7 1/4
5	8	12	5	7 1/4
6	8	12	5	7 1/4
7	10	12	5	7 1/4
8	10	12	5	7 1/4
9	12 1/2	14	5	7 1/4
10	12 1/2	14	5	7 1/4
12	15	16	5	7 1/4
14	17 1/2	20	7 1/2	9 3/4
16	18	24	7 1/2	9 3/4
24 x 16	18	38	5	7 1/4

The total length of the DESV unit is the summation of the unit length (with or without attenuator) and the length of the optional water coil.

This submittal is meant to demonstrate general dimensions of this product. The drawings are not meant to detail every aspect of the product. Drawings are not to scale. Titus reserves the right to make changes without written notice.

All rights reserved. No part of this work may be reproduced or transmitted in any form or by any means, electronic or mechanical, including photocopying and recording, or by any information storage retrieval system without permission in writing from Tomkins Industries, Inc.

KLING STUBBINS

Appendix A.3
Low Pressure Drop Air Filters

Aeropleat® III

MERV 8 Standard Capacity Pleated Panel Filter

The economical choice for those requiring MERV 8 efficiency in HVAC applications.

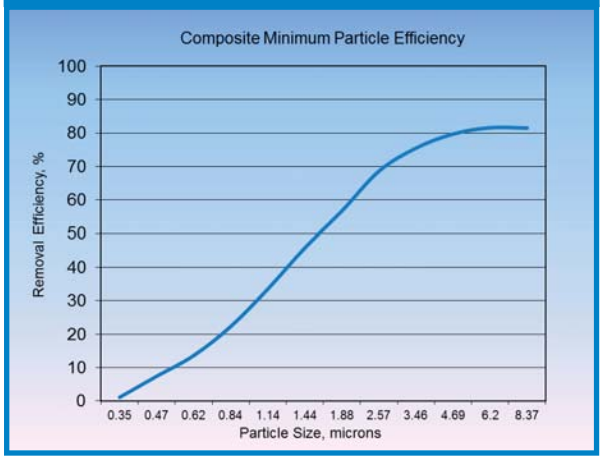

The efficiency chart above is extrapolated from particle size versus efficiency information when evaluated per ASHRAE Standard 52.2.

The Camfil Farr Aeropleat® III pleated filter offers medium grade ASHRAE efficiency, and sets the performance standard for those upgrading from lower efficiency pleats, throw-aways or pads. The Aeropleat III has a MERV 8 when evaluated per ASHRAE Standard 52.2.

As a stand-alone filter, the Aeropleat III will remove many contaminants associated with today's indoor air quality concerns. Available in 1", 2" and 4" depths, its increased media area offers an extended service life when compared to lower efficiency throw-aways or pads. Applications include commercial buildings, educational facilities and specialty manufacturing. As a prefilter, the Aeropleat III offers protection for the higher efficiency final filters required for today's high-technology applications.

Built for today's HVAC systems, the Aeropleat III:

- Has 10 pleats per linear foot (2" deep model) with a radial pleat design for full use of media area.
- A cotton and synthetic media blend which provides medium grade ASHRAE performance and high dust-holding capacity. The media is manufactured from 100% recycled materials in accordance with Camfil Farr's sustainable initiatives.
- Includes a welded wire media grid that is treated for corrosion resistance and prevents media oscillation or pull-away. The wire grid is manufactured from reclaimed metals in accordance with Camfil Farr's sustainable initiatives.
- Has a high wet-strength beverage board frame that is bonded to the media to prevent air bypass. Diagonal support members of the same construction are bonded to he media creating a rigid and durable filter pack. The filter will withstand 2.0" w.g. without failure.
- Is available in 1", 2" and 4" depths.
- Has an ECI[1] value of two stars.

[1] The Energy Cost Index (ECI) is a system that rates a filter's energy usage and its ability to maintain published efficiency over its lifetime. ECI is useful when comparing filters of similar construction and published efficiency. ECI ratings range from a high of 5 stars (low life cycle cost and high overall value) to a low of 1 star (high life cycle cost and low overall value). Details on ECI ratings for Camfil Farr and competitor's products are available from your Camfil Farr sales outlet and on the web at www.camfilfarr.com.

Camfil Farr	Product sheet
Aeropleat® III	1008 - 0910
Camfil Farr - clean air solutions	

Nominal Depth (inches)	Nominal Size (inches)	Part Number	Actual Size (inches)			Airflow Capacity (cfm)	Resistance at Capacity (inches w.g.)	Total Media Area (sq. feet)	Number of Pleats
			Height	Width	Depth				
4”	20 x 16	116307-004	19.38	15.38	3.75”	1110	0.20	12.6	9 pleats per linear foot
	20 x 20	116307-003	19.38	19.38		1390		15.7	
	24 x 12	116307-002	23.38	11.38		1000		11.3	
	24 x 16	116307-012	23.38	15.38		1390		16.1	
	24 x 18	116307-009	23.38	17.38		1500		16.4	
	24 x 20	116307-007	23.38	19.38		1670		18.9	
	24 x 24	116307-001	23.38	23.38		2000		22.7	
	25 x 16	116307-005	24.38	15.38		1390		15.7	
	25 x 20	116307-006	24.38	19.38		1740		19.7	
2”	20 x 14	116300-010	19.50	13.50	1.75”	970	0.28	6.1	10 pleats per linear foot
	20 x 12	116300-017	19.50	11.50		830		5.1	
	20 x 16	116300-001	19.50	15.50		1110		6.5	
	20 x 18	116300-018	19.50	17.50		1250		7.6	
	20 x 20	116300-002	19.50	19.50		1390		8.6	
	20 x 30	404811-002	19.50	29.50		1045		12.6	
	24 x 12	116300-006	23.38	11.38		1000		6.1	
	24 x 18	116300-008	23.50	17.50		1500		9.1	
	24 x 20	116300-007	23.50	19.50		1670		10.3	
	24 x 24	116300-005	23.38	23.38		2000		12.1	
	25 x 16	116300-004	24.50	15.50		1390		7.8	
	25 x 18	116300-009	24.50	17.50		1560		9.5	
	25 x 20	116300-003	24.50	19.50		1740		10.7	
	25 x 14	116300-011	24.50	13.50		1220		7.6	
	24 x 16	116300-012	23.50	15.50		1330		7.8	
	25 x 25	116300-013	24.50	24.50		2170		13.3	
	20 x 10	116300-015	19.50	9.50		700		4.0	
	16 x 16	116300-016	15.50	15.50		890		5.2	
	20 x 15	116300-014	19.50	14.50		1040		6.1	
	25 x 15	116300-019	24.50	14.50		1300		7.6	
1”	24 x 12	119303-009	23.50	11.50	0.88”	700	0.23	3.8	12 pleats per linear foot
	20 x 14	119303-006	19.50	13.50		680		3.7	
	20 x 15	119303-008	19.50	14.50		730		4.0	
	20 x 16	119303-001	19.50	15.50		780		4.3	
	20 x 20	119303-002	19.50	19.50		970		5.4	
	24 x 20	119303-007	23.50	19.50		1165		6.5	
	24 x 24	119303-005	23.50	23.50		1400		7.8	
	25 x 14	119303-011	24.50	13.50		850		4.7	
	25 x 16	119303-004	24.50	15.50		970		5.4	
	25 x 20	119303-003	24.50	19.50		1215		6.7	
	24 x 18	119303-014	23.50	17.50		1050		5.8	
	25 x 18	119303-028	24.50	17.50		1100		6.0	
	24 x 16	119303-010	23.50	15.50		930		5.1	
	25 x 25	119303-013	24.50	24.50		1520		8.5	
	20 x 10	119303-012	19.50	9.50		490		2.8	
	16 x 16	119303-016	15.50	15.50		620		3.4	
	20 x 7	119303-017	19.50	6.50		340		1.9	
	20 x 12	119303-018	19.50	11.50		580		3.2	
	20 x 18	119303-019	19.50	17.50		880		4.8	
	20 x 30	403243-005	19.50	29.50		730		8.0	
	22 x 22	119303-020	21.50	21.50		1180		6.5	
	24 x 10	119303-021	23.50	9.50		580		3.3	
	25 x 10	119303-022	24.50	9.50		610		3.5	
	25 x 12	119303-023	24.50	11.50		730		4.0	
	25 x 15	119303-024	24.50	14.50		910		5.0	
	24 x 14	119303-026	23.50	13.50		820		4.5	
	16 x 12	119303-027	15.50	11.50		470		2.3	

DATA NOTES:
To establish a schedule for filter change, record initial pressure drop when installed, order filters for change when pressure drop has doubled and service unit when replacements are available.
Maximum recommended pressure drop for this product is 1.0 inches w.g.
The Aeropleat III filter is classified by Underwriters Laboratories as UL 900. Maximum operating temperature to 200° F (93° C).
2” & 4” deep filters are rated at 500 fpm and 1” deep filters are rated at 350 fpm.
Tolerance in accordance with *ARI Standard 850*.
For Aeropleat III specifications please consult your local Camfil Farr Distributor or Representative, or visit www.camfilfarr.com.

Camfil Farr is committed to continuous research, development and product improvement. We reserve the right to change designs and specifications without notice.

Camfil Farr
United States Tel: (973) 616-7300 Fax: (973) 616-7771
Canada Tel: (450) 629-3030 Fax: (450) 662-6035
Email: camfilfarr@camfilfarr.com

Media and wire from recycled materials.

ENERGY COST INDEX

Based upon performance of a 24” by 24” by 2”.

camfil FARR
Certified Quality System
ISO 9001:2000

Flanders®
FOREMOST IN AIR FILTRATION

Super-Flow® V

Extended Surface Minipleat Filter

Bulletin PB1000-0511

General

Super-Flow® V extended surface area and low pressure drop minipleat filters are designed for use in most commercial and industrial HVAC systems where medium to high efficiency filtration is required. Super-Flow®V filters are available in average efficiency ranges: 65%, 85%, 95% and 98% per ASHRAE Standard 52.1 test methods and 95% DOP. They may be operated at face velocities from 0 to 750 fpm. Super-Flow®V filters are UL 900 Class 2 listed.

Construction

Super-Flow® V filters are constructed of multiple minipleat panels bonded to flame-retardant plastic panels on top and bottom to make an unusually strong assembly that is both corrosion and moisture resistant. Aerodynamic extruded vertical supports minimize air entry turbulence. Super-Flow® V filters are totally rigid making them ideal for variable air volume (VAV) systems, as well as applications downstream of supply fans.

Low Pressure Drop

Super-Flow® V minipleat filters have an exceptionally low clean pressure drop unmatched by most any filter of the same efficiency. This affords low fan energy costs during much of the life of the filter system. In addition, they are the filters of choice for packaged air conditioning systems that do not have the fan capacity of larger central systems.

Longer service life means material and labor cost savings and less disruption of systems caused by filter change-out shutdowns. High dust holding capacity is a key benefit of a filter with increased media area.

Physical Data

Media: Moisture-resistant microfine fiberglass

Filter Pack: Minipleat panels

Media Support: Adhesive

Top and Bottom Panels: Flame-retardant plastic

Vertical Supports: Aerodynamic extruded vertical supports

Operating limits: 160°F and 100% RH continuous duty

Actual Header Size: Nominal size less 5/8" (e.g. a nominal 24" x 24" filter is actually 23-3/8" x 23-3/8")

Actual Depth: 11-1/2"

Important Features

- Lowest clean pressure drop for energy savings and applicability to small fan systems
- Longer service life because of a very high ratio of media to nominal face area
- Aerodynamic vertical supports minimize air entry turbulence
- Minipleat panels provide rigidity for VAV systems and resistance to turbulent air flow
- May be operated from 0 to 750 fpm face velocity in either air flow direction
- Moisture resistant for humid air applications
- MERV 11-16

Efficiency %	Model Number	Nominal Size HxWxD Inches	250 FPM		375 FPM		500 FPM		625 FPM		750 FPM		Media Area (Sq Ft)	Wt. Each (Lbs.)
			CFM	PD	CFM	PD	CFM	PD	CFM	PD	CFM	PD		
95% DOP	SFVD-95A12	24 x 24 x 12	1000	0.28	1500	0.55	2000	0.75	2500	1.0	*	*	196	18
95% DOP	SFVD-95B12	20 x 24 x 12	800	0.28	1200	0.55	1600	0.75	2000	1.0	*	*	162	14
95% DOP	SFVD-95C12	12 x 24 x 12	500	0.28	750	0.55	1000	0.75	1250	1.0	*	*	98	9
98%	SFV-98A12	24 x 24 x 12	1000	0.25	1500	0.45	2000	0.60	2500	.08	*	*	19	17
98%	SFV-98B12	20 x 24 x 12	800	0.25	1200	0.45	1600	0.60	2000	.08	*	*	162	13
98%	SFV-98C12	12 x 24 x 12	500	0.25	750	0.45	1000	0.60	1250	.08	*	*	98	8
95%	SFV-95A12	24 x 24 x 12	1000	0.14	1500	0.25	2000	0.36	2500	0.51	3000	0.67	196	17
95%	SFV-95B12	20 x 24 x 12	800	0.14	1200	0.25	1600	0.36	2000	0.51	2400	0.67	162	13
95%	SFV-95C12	12 x 24 x 12	500	0.14	750	0.25	1000	0.36	1250	0.51	1500	0.67	98	8
85%	SFV-85A12	24 x 24 x 12	1000	0.07	1500	0.18	2000	0.27	2500	0.40	3000	0.58	196	17
85%	SFV-85B12	20 x 24 x 12	800	0.07	1200	0.18	1600	0.27	2000	0.40	2400	0.58	162	13
85%	SFV-85C12	12 x 24 x 12	500	0.07	750	0.18	1000	0.27	1250	0.40	1500	0.58	98	8
65%	SFV-65A12	24 x 24 x 12	1000	0.05	1500	0.15	2000	0.25	2500	0.38	3000	0.50	196	17
65%	SFV-65B12	20 x 24 x 12	800	0.05	1200	0.15	1600	0.25	2000	0.38	2400	0.50	162	13
65%	SFV-65C12	12 x 24 x12	500	0.05	750	0.15	1000	0.25	1250	0.38	1500	0.50	98	8

Performance Data Notes:

1. PD represents clean pressure drop in inches w.g. The recommended final pressure drop for all models is 2.0 inch w.g.
2. Operation down to zero air flow is satisfactory for all models
3. Efficiency is average and is based on ASHRAE Standard 52.1 test methods for 65%, 85%, 95% and 98% filters. Performance values stated may be averages typical of the products listed. Contact factory for actual performance test reports on specific products.
4. Performance tolerances conform to section 7.4 of ARI Standard 850.
5. Actual filter header is 5/8 inch under on height an width. Actual depth is 11-1/2 inch
6. Performance values shown in this publication may be averages or estimates intended to generally represent product styles. Always contact factory for latest actual test data on specific Flanders models.

Installation Considerations

Super-Flow®V filters may be installed in Flanders PF-1 Holding Frames, K-Trac Filter Framing Modules, Sureseal Side Access Housings or in similar existing hardware. PF-1 Holding Frames are riveted together to form a filter bank. K-Trac Filter Framing Modules are especially suitable for medium to large built-up filter banks. Smaller systems and systems with minimum upstream access space are best served using Sureseal Side Access Housings.

Super-Flow®V filters are furnished with a peripheral header on the air entering side and with foam gaskets on the “H” dimension for the 24 x 24 model and “W” dimension on the 12 x 24 and 20 x 24 models.

Guide Specifications

1.0 General

1.1 Medium and high efficiency extended surface low pressure drop minipleat filters shall be Super-Flow®V models as manufactured by Flanders.

1.2 Filter sizes, efficiencies and capacities shall be as scheduled on the drawings.

2.0 Filter Construction

2.1 Filters shall consist of multiple minipleat panels bonded to flame-retardant plastic panels on top and bottom and aerodynamic design extruded plastic struts.

3.0 Performance

3.1 Initial and final resistances shall not exceed the scheduled values.

3.2 The average efficiency shall be as determined by ASHRAE Standard 52.1 test methods.

3.3 95% DOP models shall be MERV 16, ASHRAE efficiency 98% models shall be MERV 15, 95% model shall be MERV 14, 85% model shall be MERV 13, 65% model shall be MERV 11 by ASHRAE Standard 52.2.

3.4 Filters shall be UL 900 Class 2 listed.

KLING STUBBINS

Appendix A.4
Plate and Frame Heat Exchangers

PF Series: Plate & Frame Heat Exchangers

Taco PF Series Plate and Frame Heat Exchangers are ASME designed and constructed. Computerized product selection helps you choose the heat exchanger that's just right for your application. Their compact size and ease of servicing, coupled with Taco dependability, make the PF Series the perfect choice.

Taco systems made easy®

©Taco Catalog #200-4
Supersedes: 01/23/09

Effective Date: 09/24/10
Printed in USA

TACO PF Series: Plate and Frame Heat Exchanger Specification

Furnish a TACO plate and frame heat exchanger to meet the operating conditions as indicated in the attached schedule.

The exchanger shall be designed, constructed and tested in accordance with Section VIII, Division I of the ASME Pressure Vessel Code, and shall be code stamped. Pressure vessels provided for installation in Canada shall be marked with the appropriate CRN number.

Preference will be given to single pass designs with all system connections to be located on the face of the fixed cover plate.

The plate and frame heat exchanger's fixed and movable covers shall be designed to provide sufficient uniform thickness to withstand all loading. Stiffeners and welded reinforcements shall not be permitted. Any plate within the exchanger's plate pack shall be replaceable without the need to remove other plates.

A roller bearing shall be provided on the movable cover for all units with port sizes 3" or larger. The frame assembly shall be of bolted construction. Welding to the pressure retaining components is not permitted. The frame assembly design shall allow the addition of a minimum of 10% additional plates.

Each plate shall be pressed from a homogenous metal sheet in one step. Each plate channel shall be designed to allow full design pressure on one side with no pressure on the adjacent plate channel. Contact between adjacent plates is required to optimize structural integrity and elimination of vibration.

Gaskets shall be designed to indicate leakage across the sealing gaskets prior to the intermixing of fluids.

The suspension and guidance method in the design of the plates, frame, carrying and guide bars shall mechanically align the plates during tightening. Gasket surfaces shall be used for sealing not for plate alignment. The carrying and guide bar surfaces in contact with the plate pack shall be stainless steel. All other carbon steel surfaces except the bolts shall be epoxy painted.

An aluminum or optional 304 stainless steel OSHA shroud could be provided.

A comprehensive operations and maintenance manual and ASME nameplate shall be attached on the face of the fixed cover.

Connections less than or equal to 2-inch shall be NPT type. Connections larger than 2-inch shall be of studded port design. Each studded port shall be lined with a fluid compatible material to prevent process fluid from coming in contact with the painted cover.

The exchanger shall be hydrostaticly tested in accordance with the requirements of the ASME Code Section VIII Div 1, para. UG-99.

A computer generated submittal and specification sheet indicating the criteria used in each unit's selection shall be submitted for approval.

Applications

Economizer free cooling; ground source heat pumps; ground water cooling; water source heat pump freeze protection isolation; campus (district) heating and cooling; industrial processes; and pressure zone isolation.

1. Frame Plate (Fixed Plate)
2. Pressure Plate (Movable Plate)
3. Support Column
4. Upper Carry Bar
5. Lower Guide Bar
6. Pressure Plate Roller
7. Tightening Bolt
8. Fixing Screws
9. Rubber or Metal Liners
10. Heat Transfer Plates
11. Gaskets

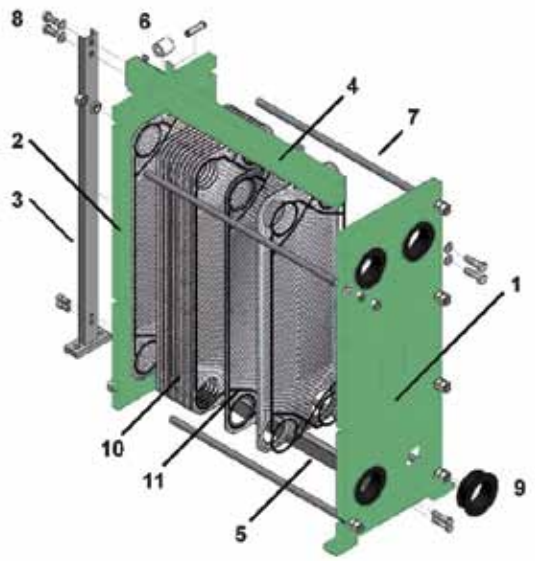

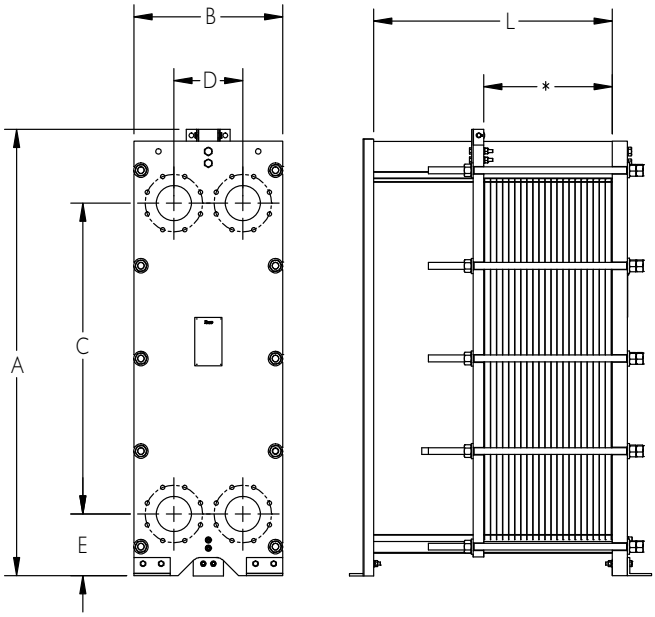

* Plate Pack tightening dimension varies with number of plates. This value is provided within selection program output

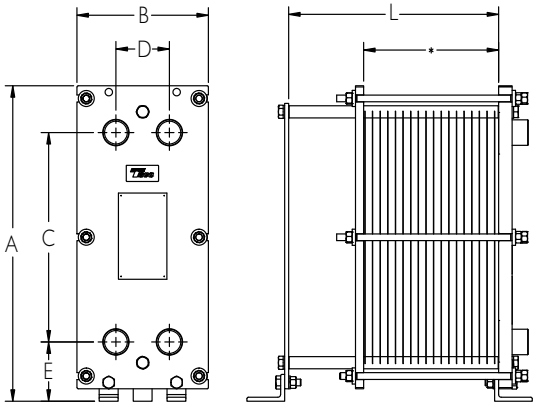

Unit Type	A	B	C	D	E	L	Maximum # of Plates	Port Size		Maximum Flow (GPM)	Maximum Surface Area (Sq. Ft.)
PF05	18.2	6.3	13.3	3.4	3.4	23.7	150	1"	---	54	65
PF09	31.5	6.3	26.6	3.4	3.4	23.7	150	1"	---	54	129
PF10	29.8	12.3	19.4	5.0	6.0	59.0	250	2"	---	220	269
PF16	37.7	12.3	27.3	5.0	6.0	59.0	250	2"	---	220	430
PF22	45.6	12.3	35.2	5.0	6.0	59.0	250	2"	---	220	565
PF19	43.3	17.6	25.6	8.0	8.4	118.0	350	3"	---	484	716
PF205	46.2	18.5	28.3	8.9	8.6	98.5	450	3"	4"	858	1017
PF31	53.2	18.5	35.2	8.9	8.7	118.0	600	3"	4"	858	1937
PF40	62.8	18.5	44.9	8.9	8.5	118.0	600	3"	4"	858	2581
PF50	72.5	18.5	54.6	8.9	8.6	118.0	600	3"	4"	858	3229
PF71	91.3	18.5	74.1	8.9	8.6	118.0	600	3"	4"	858	4521
PF41/42	59.6	24.6	37.1	11.4	10.3	157.5	700	6"	---	1897	3011
PF60/62	73.8	24.6	51.4	11.4	10.2	157.5	700	6"	---	1897	4521
PF80/82	88.2	24.6	65.8	11.4	10.2	157.5	700	6"	---	1897	6027
PF112	108.2	24.6	84.9	11.4	11.0	157.5	700	6"	---	1897	9042
PF70	69.6	30.3	44.5	15.6	12.4	157.5	750	8"	---	3210	5651
PF100	83.8	30.4	58.7	15.6	12.4	157.5	750	8"	---	3210	8073
PF130	98.2	30.3	72.9	15.6	12.7	157.5	750	8"	---	3210	10495
PF120	92.0	45.6	58.7	18.9	14.5	168.5	700	12"	---	7163	9042
PF160	106.7	45.6	73.9	18.9	14.5	168.5	700	12"	---	7163	12055
PF190	121.8	45.6	89.3	18.9	14.5	168.5	700	12"	---	7163	14316

These dimensions may be subject to change

Frame Designs & Operating Pressures: 150 PSI & 300 PSI
Materials: 304SS & 316SS
Standard & High Temperature Gaskets: Nitrile & EPDM

Glue-Free Gaskets
Glue-free gaskets offer fast and easy gasket replacement on site.

Clip-on

Snap-on

KLING STUBBINS

Appendix A.5
Pumps

Series 1510
Centrifugal Pumps

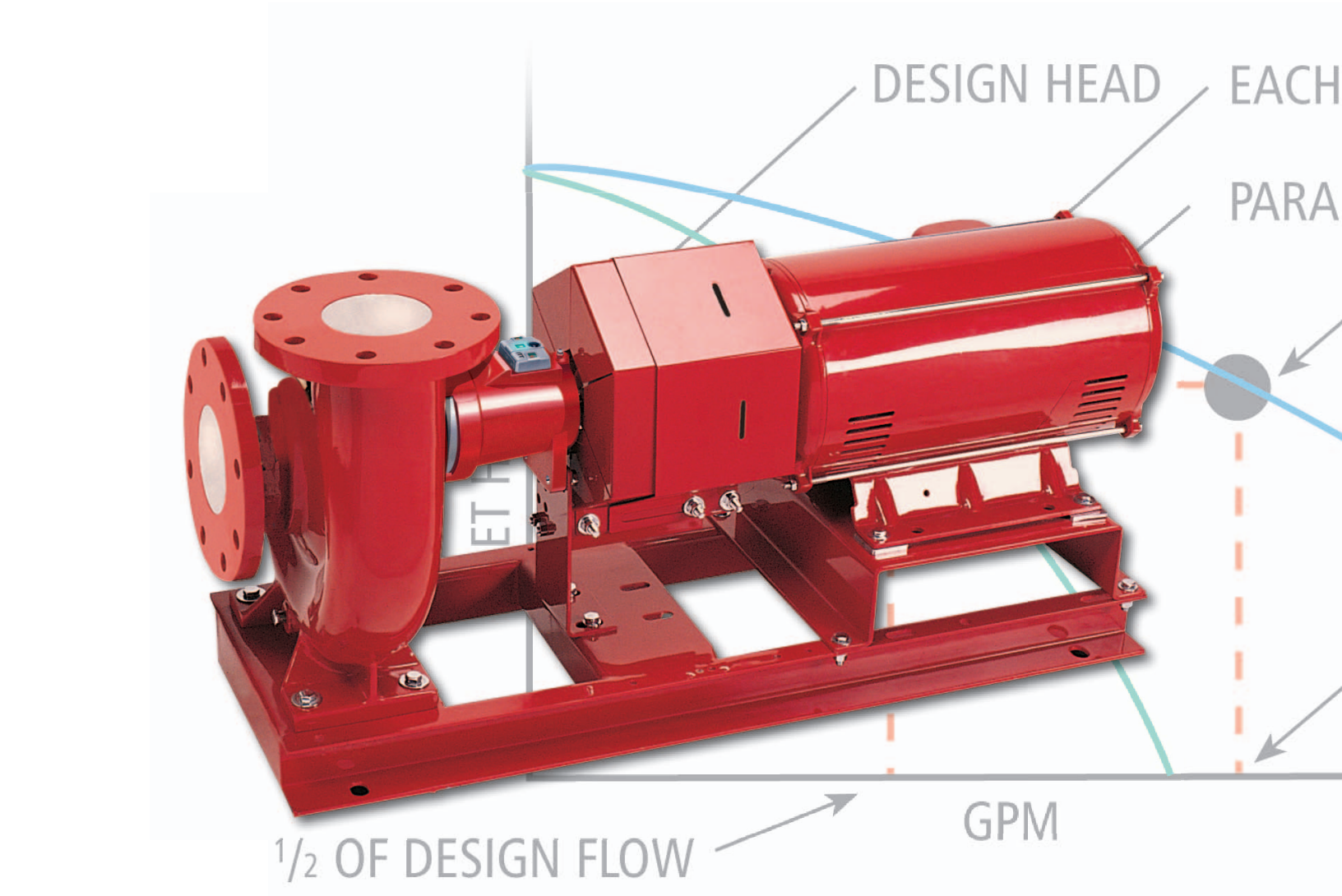

B-207H

Bell & Gossett
a xylem brand

Table of Contents

Useful Pump Formulas 2

Standard Features 3

Technical Data 4

Materials of Construction. 5

Selection Charts 6

Performance Curves 7

Centrifugal Pump Dimensions 8-9

The B&G End Suction Pump System. 10

Typical Specifications 11

Useful Pump Formulas

$$\text{Pressure (PSI)} = \frac{\text{Head (Feet) x Specific Gravity}}{2.31}$$

$$\text{Head (Feet)} = \frac{\text{Pressure (PSI) x 2.31}}{\text{Specific Gravity}}$$

$$\text{Vacuum (Inches of Mercury)} = \text{Dynamic Suction Lift (Feet) x .883 x Specific Gravity}$$

$$\text{Horsepower (Brake)} = \frac{\text{GPM x Head (Feet) x Specific Gravity}}{\text{3960 x Pump Efficiency}}$$

$$\text{Horsepower (Water)} = \frac{\text{GPM x Head (Feet) x Specific Gravity}}{3960}$$

$$\text{Efficiency (Pump)} = \frac{\text{Horsepower (Water)}}{\text{Horsepower (Brake)}} \text{ x 100 Per Cent}$$

$$\text{NPSH (Available)} = \text{Positive Factors} - \text{Negative Factors}$$

Affinity Laws: Effect of change of speed or impeller diameter on centrifugal pumps.

	GPM Capacity	Ft. Head	BHP
Impeller Diameter Change	$Q_2 = \frac{D_2}{D_1} Q_1$	$H_2 = \left(\frac{D_2}{D_1}\right)^2 H_1$	$P_2 = \left(\frac{D_2}{D_1}\right)^3 P_1$
Speed Change	$Q_2 = \frac{RPM_2}{RPM_1} Q_1$	$H_2 = \left(\frac{RPM_2}{RPM_1}\right)^2 H_1$	$P_2 = \left(\frac{RPM_2}{RPM_1}\right)^3 P_1$

Where Q = GPM, H = Head, P = BHP, D = Impeller Dia., RPM = Pump Speed

Take away these eight standard features and you'll have a pump like everyone else's.

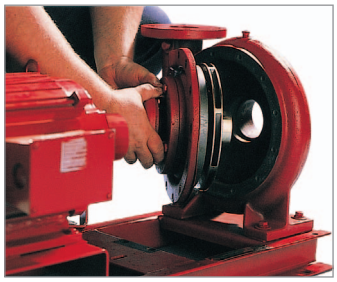

True Back Pullout

A B&G standard in design and construction.Ease in service is assured, while piping and motor remain undisturbed. Extended delays for repairs are virtually eliminated.

Internally Self-Flushing Mechanical Seal

This design is way ahead of its time. This unique seal design is proven in many years of service. It requires no special external flushing provisions, since the design provides for constant efficient flushing action internally. This standard feature ensures maximum seal face lubrication, heat dissipation and debris removal without vulnerable, external flush tubing. The internal flushing action passes two and a half to three times the flow over the seal faces — compared to a few GPM for conventional, stuffing-box designed pumps.

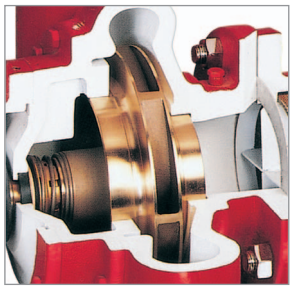

Computer Controlled Impeller Balancing

1510 impellers are balanced to ANSI/HI 9.6.4-2009, balance grade G6.3 standards. This method of computer balancing Impellers provides for quiet, efficient, vibration free performance. Diameters are computer selected at the factory to furnish assurance that your capacity requirements will be met.

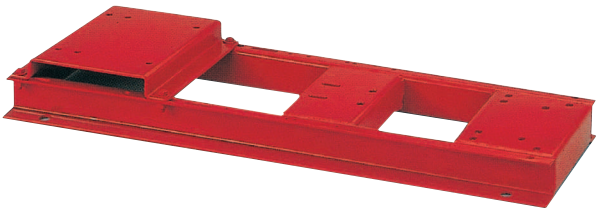

Heavy Duty, Rugged Baseplate

The Bell & Gossett fabricated heavy duty baseplate is supplied as standard on every Series 1510 pump. Unlike rolled steel and "C" channel baseplates, the Series 1510 baseplate provides a heavy duty saddle assembly, full seam welds, closed baseplate ends and an open top to provide ease of access for proper equipment grouting.

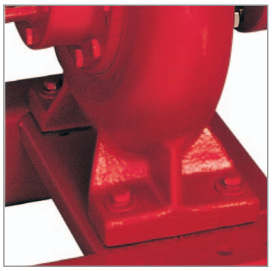

Solid-Foot Mounted Volute

All Series 1510 pumps are provided as standard with an integrally cast volute foot located directly beneath the pump volute. This integrally cast foot ensures that the alignment between the volute and motor assembly is maintained. Without solid support beneath the volute, the piping weight alone will cause distortion which can lead to premature failure of the bearings, shaft and mechanical seal. This feature is equally important on hot water applications. The Series 1510 volute foot provides a solid foundation and eliminates the deflections which would otherwise exist within an unsupported overhung volute during the normal thermal expansion of the system piping against the volute.

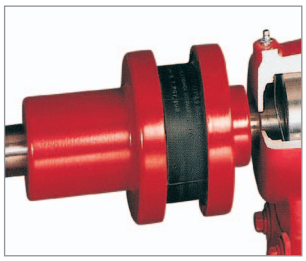

Center Drop-Out Spacer Coupling

Unlike conventional jaw type or rigid style couplings, a center drop-out spacer coupling allows removal of the bearing frame and rotating element without disturbing the pump end pipe alignment or motor electrical connections.

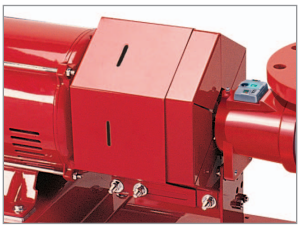

ANSI/OSHA-Compliant Coupling Guard

The coupler guard complies with ANSI B15.1 and OSHA 1910.219. The guard offers increased protection against potential injuries and is standard on all 1510 pumps. The guards include slotted viewing windows for easy inspection.

Patented i-ALERT™ Condition Monitor

Continuously measures vibration and temperature at the outboard bearing and automatically indicates when pre-set levels of vibration and temperature have been exceeded, so that changes can be made before failure occurs. A visual indication of pump health makes walk-around inspections more efficient and accurate. This onboard pump intelligence helps minimize life-cycle costs while maximizing performance.

Technical Data

BALANCE STANDARDS

Impellers are balanced to Hydraulic Institute Standards ANSI/HI 9.6.4-2009.

The allowable residual unbalance in the impeller rotating assembly conforms to ANSI grade G6.3 (Ref. ISO 1940).

ANSI Balance Quality Grades of G2.5 and G1 for the rotating assembly are also available. Consult your local Bell & Gossett Representative for additional details.

VIBRATION LIMITS

Series 1510 pumps conform to Hydraulic Institute ANSI/HI 9.6.4-2009 for recommended acceptable unfiltered field vibration limits (as measured at the pump bearings per ANSI/HI 9.6.4-2009, Figure 9.6.4.2.3.1) for pumps with rolling contact bearings.

PUMP SPEED RPM	OVERALL DISPLACEMENT (Unfiltered) Peak to Peak-Mils (.001")
3600	2.2
1800	3.8
1200	5.8

SEISMIC CAPABILITIES

Series 1510 pumps are capable of withstanding a horizontal load of 0.5g* without adversely affecting pump operation.

*Piping and/or fasteners used to anchor the pump to the mounting pads on the floor are excluded.

MECHANICAL SEAL

Seal Features	
Standard Seal Type	B&G
Internally Flushed Seal	Yes
Enlarged Seal Chamber	Yes
Standard Seal Construction	Buna-Carbon-Ceramic
Standard Working Pressure	175 psig (12 Bar)
Maximum Working Pressure	250 psig (17 Bar)
Standard Seal Temperature Rating	225 deg F (107°C)
Optional Temperature Rating	250 deg F (121°C)

The ceramic material is 99.5% pure alumina oxide, ceramic seat hardness of 68 Rockwell C, or a tensile strength of 300,000 psi.

Materials of Construction

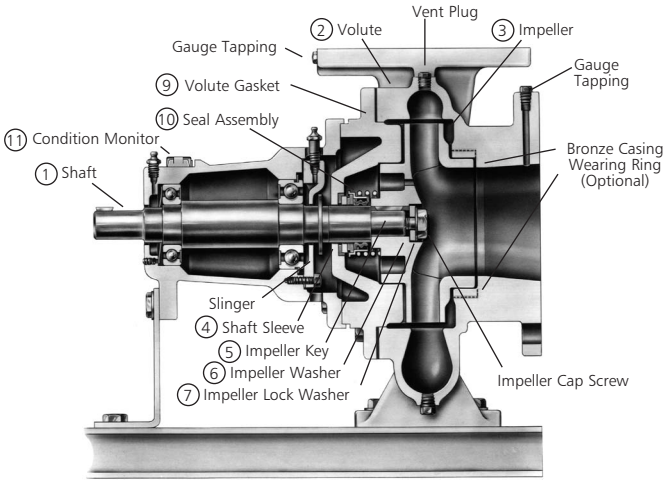

Standard Configuration

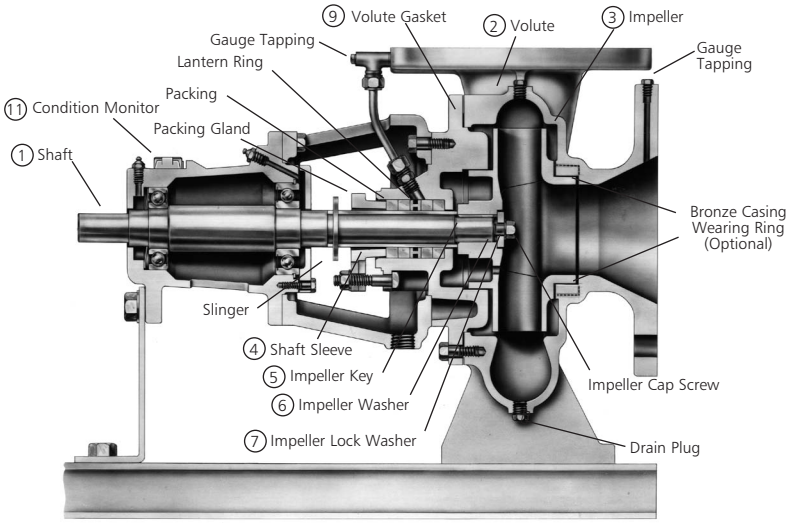

Optional – S Configuration

DESCRIPTION	BRONZE FITTED PUMP (STANDARD CONFIGURATION	ALL IRON PUMP (OPTIONAL)
1 Shaft	Steel SAE 1144	Steel SAE 1144
2 Volute	Cast Iron ASTM #A159	Cast Iron ASTM #A159
3 Impeller	Cast Bronze ASTM #B584	Cast Iron ASTM #A536
4 Shaft Sleeve	Bismuth Bronze #C89835	#304 Stainless Steel ASTM #A312
5 Impeller Key	#304 Stainless Steel	#304 Stainless Steel
6 Impeller Washer	1510 – Steel	Stainless Steel
7 Impeller Lock Washer	#304 Stainless Steel	#304 Stainless Steel
8 Impeller Cap Screw	#304 Stainless Steel	#304 Stainless Steel
9 Volute Gasket	Cellulose Fiber	Cellulose Fiber
10 Seal Assemblies		
11 Condition Monitor	Stainless Steel Encloser	Stainless Steel Encloser
Standard Seal		
Bellows	Buna N	Buna N
Faces	Carbon-Ceramic	Carbon-Ceramic
Metal Parts	Brass	Stainless Steel
Spring	Stainless Steel	Stainless Steel
For Stuffing Box		
10A Flushed Single		
O-Rings	EPREPR	
Faces	Carbon-Tungsten Carbide	Carbon-Tungsten Carbide
Metal Parts	Stainless Steel	Stainless Steel
Spring	Stainless Steel	Stainless Steel
Packed		
Packing	Graphited Impregnated Teflon	Graphited Impregnated Teflon
Gland	Bronze	Cast Iron
Lantern Ring	Filled TFE	Filled TFE

*** For operating temperatures above 250°F, a cooled flush is required – and is recommended for temperatures above 225°F for optimum seal life. On closed systems, cooling is accomplished by inserting a small heat exchanger in the flush line to cool the fluid. Flush-line Filters and Sediment Separators are available on special request.*

OPTIONAL FEATURES

All Iron Construction

Bronze Casing Wear Ring

Stainless Steel Shaft Sleeve

Stainless Steel Shaft

Drip Pan

EPR/Tungsten Carbide Seal

(Standard Configuration only)

Stuffing Box Construction with several seal and packing options

Seal Selection Guide For:

A. Standard Seals

- BUNA-PH Limitations 7-9; Temperature Range –20°F to +225°F
- EPR-PH Limitations 7-11; Temperature Range –20°F to +250°F

For use on open or closed clear water systems. Maximum working pressure 175 psi.

B. Flushed Single Seals (Stuffing Box Design)

- PH Limitations 7-11; Temperature Range –20°F to +300°F**

For use on closed or open systems where the temperature or pressure requirements exceed the limitations of the standard seal. Available in 175 psi, or 250 psi working pressures.

C. Flushed double Seals (Stuffing Box Design)

PH Limitations 7-9; Temperature Range 0°F to +250°F

For use on closed or open low pressure systems which may contain a high concentration of abrasives.An external flush is required. Maximum working pressure 175 psi.

D. Packing (Stuffing Box Design)

PH Limitations 7-9; Temperature Range 0°F to +190°F

For use on open or closed systems which require a large amount of make-up water, as well as systems which are subjected to widely varying chemical conditions and solids buildup.

Selection Charts

60 Hz

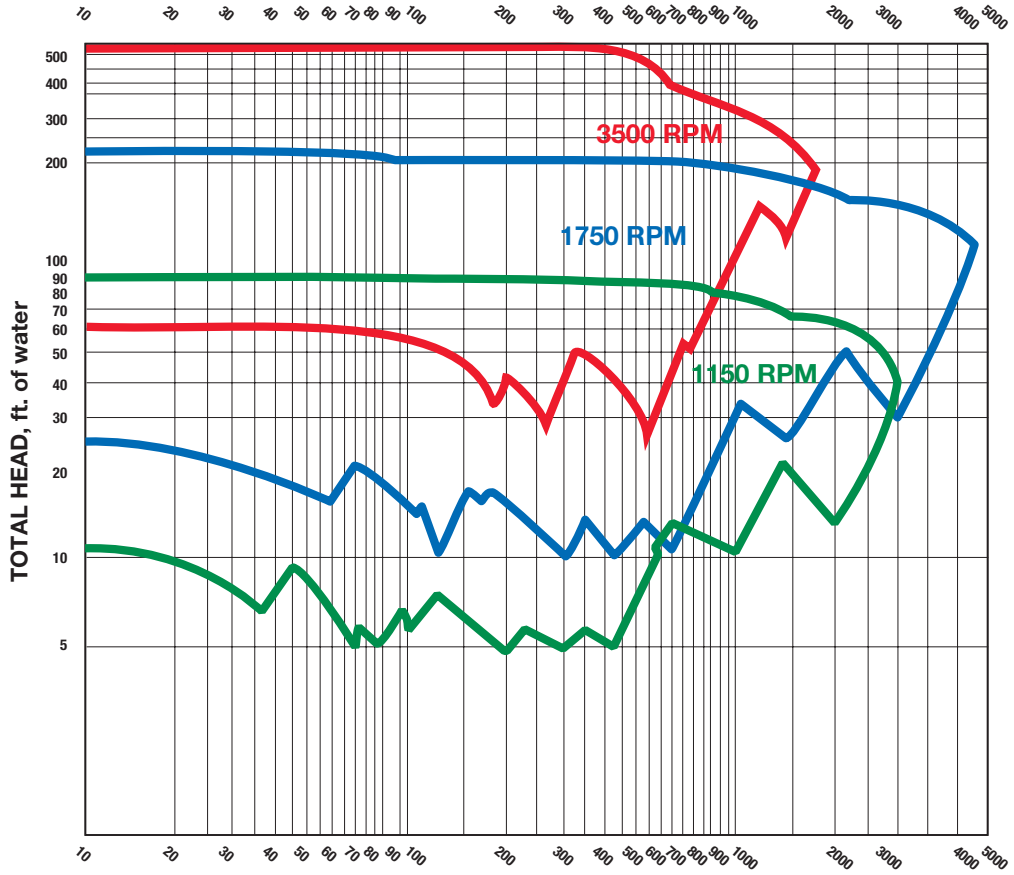

50 Hz

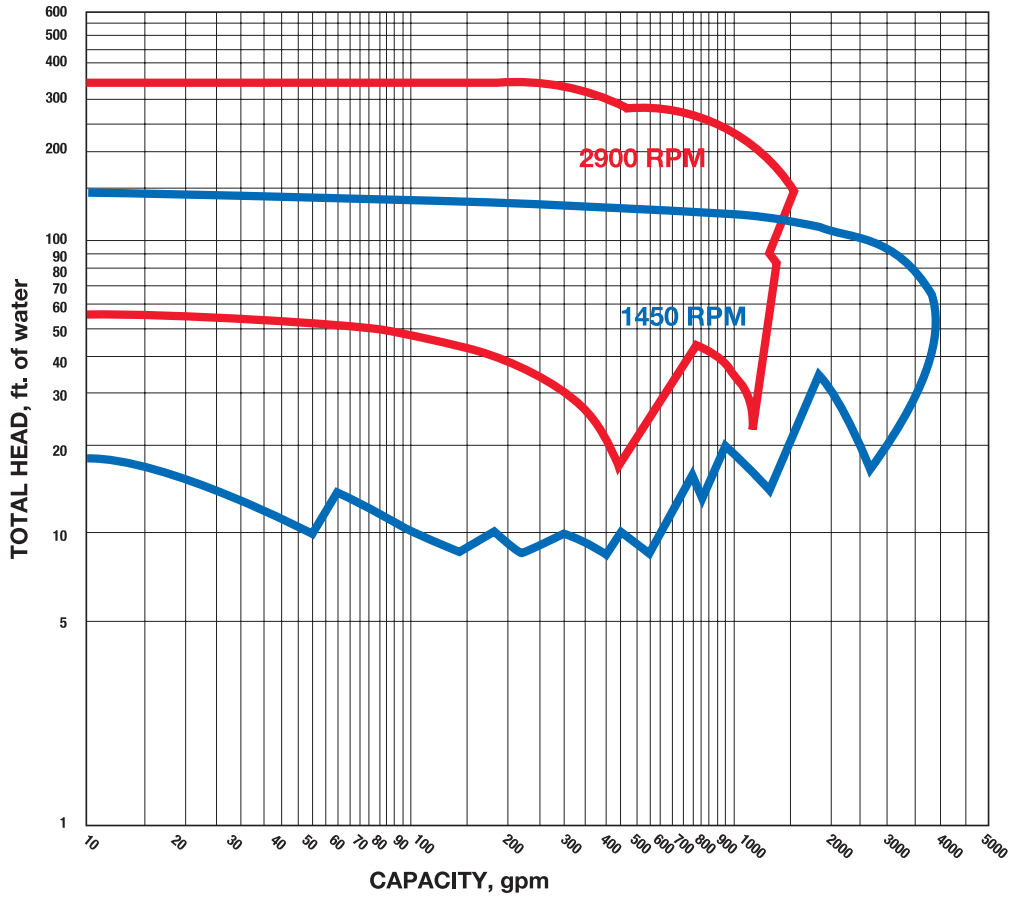

Series 1510 Performance Curves

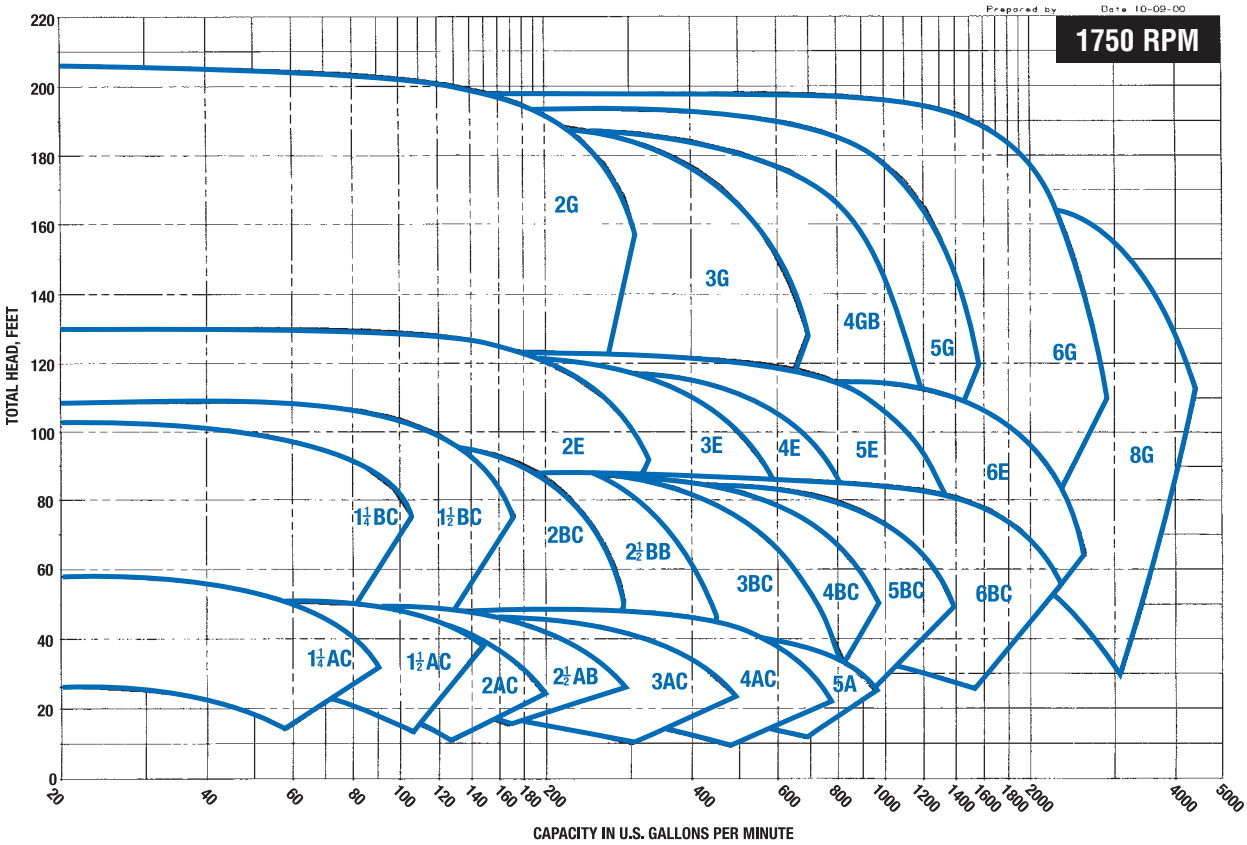

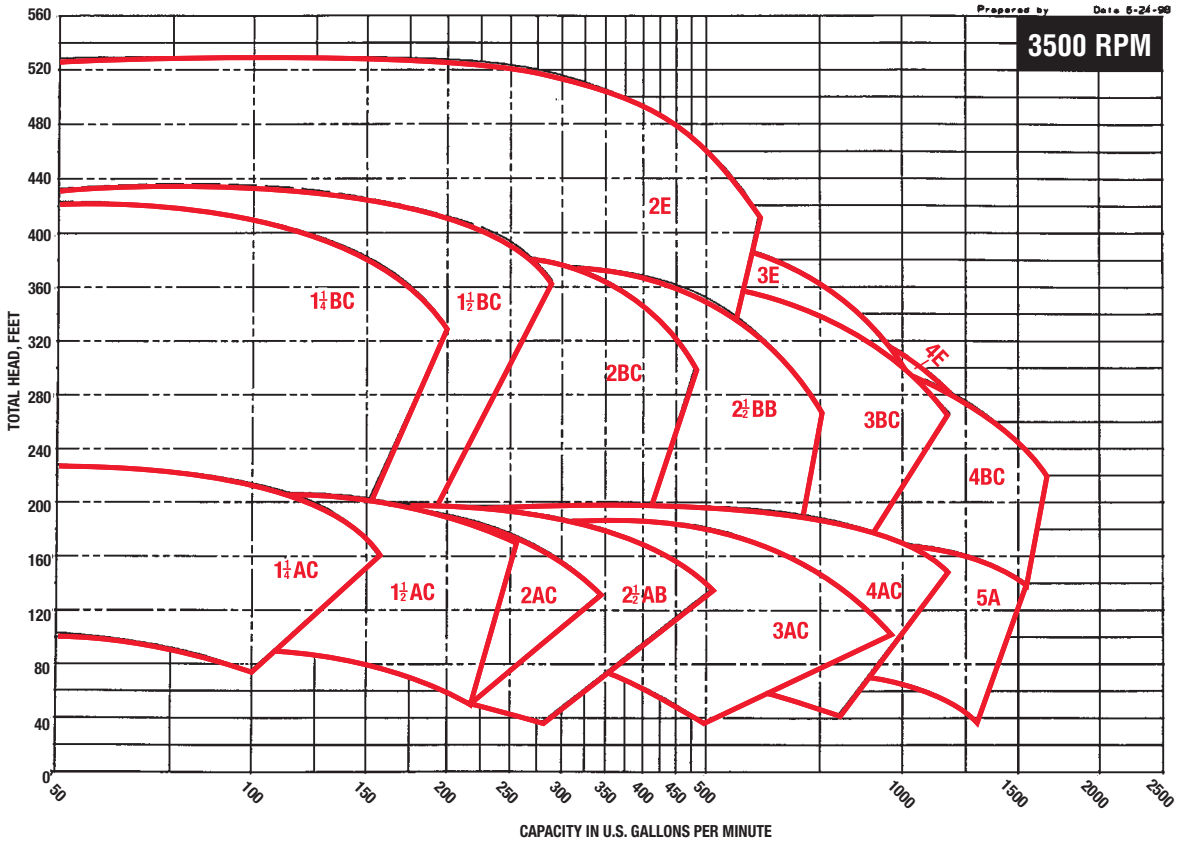

Series 1510 Centrifugal Pumps

Dimensions

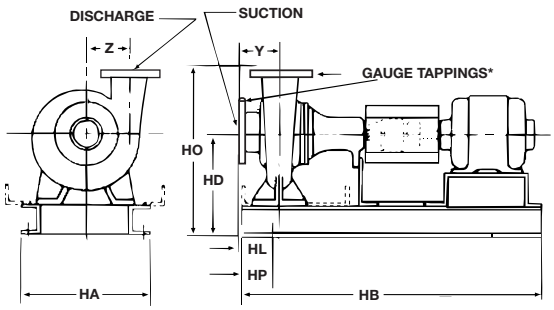

*Gauge Tapping Sizes: 1/8" for NPT, 1/4" for flanged sizes

Motor Horsepower and Frame Tabulation three phase (Dripproof Enclosure)

Horsepower	Frame @ 1750 RPM	Frame @ 3500 RPM	Horsepower	Frame @ 1750 RPM	Frame @ 3500 RPM
1/2	56		20	256T	254T
3/4	56		25	284T	256T
1	143T		30	286T	284TS
1 1/2	145T		40	324T	286TS
2	145T	145T	50	326T	324TS
3	182T	145T	60	364T	326TS
5	184T	182T	75	365T	364TS
7 1/2	213T	184T	100	404TS	365TS
10	215T	213T	125	—	404TS
15	254T	215T			

DIMENSIONS – INCHES (MM)			STANDARD MECHANICAL SEAL PUMP MODEL 1510, 1510-F								STUFFING BOX CONSTRUCTION PUMP MODEL 1510-PF, 1510-S							
PUMP SIZE DISCHARGE	SUCTION SIZE	MOTOR FRAME SIZE	HA	HB	HD	HL	HO	HP	Y	Z	HA	HB	HD	HL	HO	HP	Y	Z
1 1/4 AC (NPT)	1 1/2 (NPT)	56	12 (305)	28 3/4 (730)	9 3/4 (248)	3 1/8 (79)	14 3/4 (375)	3 (76)	3 1/4 (83)	4 1/2 (114)	14 5/8 (371)	34 5/8 (879)	9 3/4 (248)	1 3/4 (44)	14 3/4 (375)	3 (76)	3 1/4 (83)	4 1/2 (114)
		143T-145T																
		182T-184T	14 5/8 (371)	31 (787)		1 3/4 (46)						39 3/4 (1000)						
		213T-215T		34 5/8 (879)														
1 1/4 BC (NPT)		143T-145T		31 (787)	10 3/4 (273)	1 13/16 (46)	18 3/4 (476)			5 1/2 (140)		34 5/8 (879)	10 3/4 (273)	1 13/16 (46)	18 3/4 (476)			5 1/2 (140)
		182T-184T																
		213T-215T		39 3/8(1000)								46 1/2(1181)	12 (305)	2 15/16 (75)	20 (508)	5 (127)		
		254T-256T	16 (406)	46 1/2 (1181)	12(305)	2 15/16 (75)	20(508)	5 (127)			16 (406)	51 3/4 (1314)						
		284TS-286TS			13(330)		21(533)						13(330)		21(533)			
1 1/2 AC (NPT)	2 (NPT)	56	12 (305)	28 3/4 (730)	9 3/4 (248)	3 1/16 (78)	15 3/4 (400)	3 (76)	3 1/8 (79)	4 5/8 (117)	14 5/8 (371)	34 5/8 (879)	9 3/4 (248)	1 11/16 (43)	15 3/4 (400)	3 (76)	3 1/8 (79)	4 5/8 (117)
		143T-145T																
		182T-184T	14 5/8 (371)	31(787)	10 3/4 (273)	1 11/16 (43)						39 3/4(1000)						
		213T-215T		34 5/8(879)														
		254T-256T		39 3/8(1000)			16 3/4(425)				16(406)	46 1/2(1181)	12(305)	2 13/16(71)	18(457)	5(127)		
1 1/2 BC (NPT)		143T-145T		31 (787)			17 1/4 (438)			5 3/4 (146)	14 5/8 (371)	34 5/8 (879)	10 3/4 (273)	1 11/16 (43)	17 1/4 (438)	3 (76)		5 3/4 (146)
		182T-184T																
		213T-1750		34 5/8(879)								39 3/4(1000)						
		213T-215T-3500		39 3/8(1000)								46 1/2(1181)	12 (305)	2 13/16 (71)	18 1/2 (470)	5 (127)		
		254T-256T	16 (406)	46 1/2 (1181)	12(305)	2 13/16 (71)	18 1/2(470)	5 (127)			16 (406)	51 3/4 (1314)						
		284TS-286TS			13(330)		19 1/2(495)						13(330)		19 1/2(495)			
2 AC	2 1/2	56	12 (305)	28 3/4 (730)	9 3/4 (248)	3 9/16 (90)	16 1/4 (413)	3 (76)	3 1/2 (89)	4 3/4 (121)	14 5/8 (371)	34 5/8 (879)	9 3/4 (248)	2 9/16 (56)	16 1/4 (413)	3 (76)	3 1/2 (89)	4 3/4 (121)
		143T-145T																
		182T-184T	14 5/8 (371)	31(787)		2 9/16 (56)												
		213T-215T		34 5/8(879)							16 (406)	46 1/2(1181)	11(279)	3 5/16 (84)	17 1/2(445)	5 (127)		
		254T-256T		39 3/8(1000)			17 1/4(438)					51 3/4(1314)	12(305)		18 1/2(470)			
2 BC		143T-145T		31 (787)	10 3/4 (273)	2 11/16 (68)	17 3/4 (451)		4 (102)	5 7/8 (149)	14 5/8 (371)	34 5/8 (879)	10 3/4 (273)	2 11/16 (68)	17 3/4 (451)	3 (76)	4 (102)	5 7/8 (149)
		182T-184T																
		213T-215T-1750		34 5/8(879)								39 3/8(1000)						
		254T-3500		39 3/8(1000)								46 1/2(1181)	12 (305)	3 13/16 (97)	19 (483)	5 (127)		
		254T-256T	16 (406)	46 1/2 (1181)	12(305)	3 13/16 (97)	19(483)	5 (127)			16 (406)	51 3/4 (1314)						
		284TS-286TS			13(330)		20(508)						13(330)		20(508)			
		324TS-326TS			12(305)		19(483)						12(305)		19(483)			
2 E†	3	182T	16 (406)	42 1/4 (1073)	14 (356)	6 1/2 (165)	22 (559)	5 (127)	5 1/2 (140)	6 1/2 (165)		42 1/4 (1073)	14 (356)	6 1/2 (165)	22 (559)	5 (127)	5 1/2 (140)	6 1/4 (165)
		184T																
		213T																
		215T																
		254T																
		286TS		46 1/2(1181)		4 1/8 (105)						51 3/4 (1314)		4 1/8 (105)				
		324TS		51 3/4 (1314)														
		326TS																
		364TS	24 (610)	56 (1422)	16 1/2 (419)	4 3/4 (121)	24 1/2 (622)	6 (152)			24 (610)	56 (1422)	16 1/2 (419)	4 3/4 (121)	24 1/2 (622)	6 (152)		
		365TS																
2 G†		213T-215T	16 (406)	46 1/2 (1181)	14 (356)	3 7/8 (98)	23 (584)	5 (127)		7 1/4 (184)	16 (406)	46 1/2(1181)	14 (356)	3 7/8 (98)	23 (584)	5 (127)		7 1/4 (184)
		254T-256T										51 3/4 (1314)						
		284T		51 3/4(1314)														
2 1/2 AB		56	12 (305)	28 3/4 (730)	9 3/4 (248)	4 3/8 (111)	15 3/4 (400)	3 (76)	4 1/4 (108)	4 11/16 (119)	14 5/8 (371)	34 5/8 (879)	9 3/4 (248)	3 (76)	15 3/4 (400)	3 (76)	4 1/4 (108)	4 11/16 (119)
		143T-145T																
		182T-184T	14 5/8 (371)	31(787)		3 (76)												
		213T-215T		34 5/8(879)							16 (406)	46 1/2(1181)	11(279)	4 1/8 (105)	17 (432)	5 (127)		
		254T-256T		39 3/8(1000)			16 3/4(425)					51 3/4(1314)	12(305)					
2 1/2 BB		182T-184T		31(787)	10 3/4 (273)	2 3/4 (70)	17 1/2 (445)		4 (102)	6 (152)	14 5/8 (371)	34 5/8(879)	10 3/4 (273)	2 3/4 (70)	17 1/2 (445)	3 (76)	4 (102)	6 (152)
		213T-215T		34 5/8(879)								39 3/4(1000)						
		284TS-286TS	16 (406)	46 1/2 (1181)	13(330)	3 7/8 (98)	19 3/4(502)	5 (127)			16 (406)	51 3/4 (1314)	13(330)	3 7/8 (98)	19 3/4(502)	5 (127)		
		324TS-326TS			12(305)		18 3/4(476)						12(305)		18 3/4(476)			
		346TS		51 3/4(1314)	13(330)		19 3/4(502)						13(330)		19 3/4(502)			
3 AC	4	143T-145T	12(305)	28 3/4(730)	9 3/4 (248)	4 5/16(110)	15 3/4 (400)	3 (76)	4 1/8 (105)	5 (127)	14 5/8 (371)	34 5/8 (879)	9 3/4 (248)	2 15/16 (75)	15 3/4 (400)	3 (76)	4 1/8 (105)	5 (127)
		182T-184T	14 5/8 (371)	31(787)		2 15/16 (75)												
		215T		39 3/8(1000)								46 1/2(1181)	11(279)	4 1/16 (103)	17(432)	5 (127)		
		254T-256T	16 (406)	46 1/2 (1181)	12(305)	4 1/16 (103)	18(457)	5 (127)			16 (406)	51 3/4 (1314)	12(305)		18(457)			
		284TS-286TS			13(330)		19(483)						13(330)		19(483)			

These dimensions are not to be used for installation purposes unless certified. †250 psi (17 bar) available Maximum Working Pressure 175 psi (12 bar)

Series 1510 Centrifugal Pumps cont.'d

DIMENSIONS – INCHES (MM)			STANDARD MECHANICAL SEAL PUMP MODEL 1510, 1510-F								STUFFING BOX CONSTRUCTION PUMP MODEL 1510-PF, 1510-S							
PUMP SIZE DISCHARGE	SUCTION SIZE	MOTOR FRAME SIZE	HA	HB	HD	HL	HO	HP	Y	Z	HA	HB	HD	HL	HO	HP	Y	Z
3 BC	4	182T-184T	14 5/8 (371)	31(787)	10 3/4 (273)	3 11/16 (94)	18 1/4 (464)	3 (76)	4 3/4 (121)	6 1/8 (156)	14 5/8 (371)	34 5/8(879)	10 3/4 (273)	3 11/16 (94)	18 1/4 (464)	3 (76)	4 3/4 (121)	6 1/8 (156)
		213T-215T		34 5/8(870)								39 3/8(1000)						
		254T		39 3/8(1000)							16 (406)	46 1/2(1181)	12(305)	4 13/16 (122)	19 1/2(495)	5 (127)		
		284TS-286TS	16 (406)	46 1/2 (1181)	13(330)		20 1/2(521)	5 (127)				51 3/4 (1314)	13(330)		20 1/2(521)			
		324TS-326TS			12(305)		19 1/2(495)						12(305)		19 1/2(495)			
3 E†		184T	16 (406)	42 1/4 (1073)	14 (356)	6 11/16 (170)	23 1/2 (597)	5 (127)	5 1/2 (140)	7 3/8 (187)	16 (406)	42 1/4 (1073)	14 (356)	6 11/16 (170)	23 1/2 (597)	5 (127)	5 1/2 (140)	7 3/8 (187)
		213T-215T																
		254T																
		256T		46 1/2(1181)		4 5/16 (110)						51 3/4 (1314)		4 5/16 (110)				
		326TS		51 3/4(1314)														
		364TS-365TS	24 (610)	56 (1422)	16 1/2 (419)	4 15/16 (125)	26 (660)	6 (152)			24 (610)	56 (1422)	16 1/2 (419)	4 15/16 (125)	26 (660)	6 (152)		
		404TS																
3 G†		213T-215T	16 (406)	46 1/2 (1181)	14 (356)	4 1/8 (105)	23 1/2 (597)	5 (127)	5 5/8 (143)	8 (203)	16 (406)	46 1/2(1181)	14 (356)	4 1/8 (105)	23 1/2 (597)	5 (127)	5 5/8 (143)	8 (203)
		254T-256T										51 3/4 (1314)						
		284T-286T		51 3/4 (1314)														
		324T																
4 AC†	5	145T	14 5/8 (371)	31 (787)	10 3/4 (273)	4 5/16 (110)	18 1/4 (464)	3 (76)	4 15/16 (125)	5 3/4 (146)	14 5/8 (371)	34 5/8 (879)	10 3/4 (273)	4 5/16 (110)	18 1/4 (464)	3 (76)	4 15/16 (125)	5 3/4 (146)
		182T-184T																
		213T		34 5/8(870)							16 (406)	39 3/8(1000)						
		215T		39 3/8(1000)								46 1/2(1181)	12 (305)	5 7/16 (138)	19 1/2 (495)	5 (127)		
		254T-256T	16 (406)	46 1/2 (1181)	12(305)	5 7/16 (138)	19 1/2(495)	5 (127)				51 3/4 (1314)						
		284TS-286TS			13(330)		20 1/2(521)						13(330)		20 1/2(521)			
		324TS-326TS			12(305)		19 1/2(495)						12(305)		19 1/2(495)			
4 BC		213T-215T	14 5/8 (371)	34 5/8(870)	12 3/4 (324)	4 (102)	20 3/4 (527)	3 (76)	5 (127)	7 (178)		46 1/2(1181)	14 (356)	5 1/8 (130)	22 (559)		5 (127)	7 (178)
		254T		39 3/8(1000)								51 3/4 (1314)						
		256T	16 (406)	46 1/2 (1181)	14 (356)	5 1/8 (130)	22 (559)	5 (127)			N/A							
		286TS																
		324TS-326TS		51 3/4(1314)														
		364TS-365TS	24 (610)	56 (1422)	16 1/2 (419)	5 3/4 (146)	24 1/2 (622)	6 (152)										
		404TS																
4 E†		213T-215T	16 (406)	42 1/4 (1073)	14 (356)	6 11/16 (170)	23 3/4 (603)	5 (127)	5 9/16 (141)	7 1/4 (184)	16 (406)	42 1/4 (1073)	14 (356)	6 11/16 (170)	23 3/4 (603)	5 (127)	5 9/16 (141)	7 1/4 (184)
		254T																
		256T		46 1/2(1181)		4 5/16 (110)						51 3/4 (1314)		4 5/16 (110)				
		284T-286T		51 3/4 (1314)														
		324TS-326TS																
		364TS-365TS	24 (610)	56 (1422)	16 1/2 (419)	4 15/16 (125)	26 1/4 (667)	6 (152)			24 (610)	56 (1422)	16 1/2 (419)	4 15/16 (125)	26 1/4 (667)	6 (152)		
		404TS																
4 GB		213T-215T	16 (406)	46 1/2 (1181)	15 (381)	5 3/8 (137)	25 (635)	5 (127)	6 (152)	8 9/16 (217)	16 (406)	46 1/2(1181)	15 (381)	5 3/8 (137)	25 (635)	5 (127)	6 (152)	8 9/16 (217)
		254T-256T										51 3/4 (1314)						
		284T-286T		51 3/4 (1314)														
		324T																
5 A†	6	182T-184T	14 5/8 (371)	31(787)	12 3/4 (324)	5 3/4 (146)	21 1/4 (540)	3 (76)	5 13/16 (148)	6 1/4 (159)	14 5/8 (371)	34 5/8(879)	12 3/4 (324)	5 3/4 (146)	21 1/4 (540)	3 (76)	5 13/16 (148)	6 1/4 (159)
		213T-215T		34 5/8(870)								39 3/8(1000)						
		254T-256T	16 (406)	46 1/2 (1181)	14 (356)	6 7/8 (175)	22 1/2 (572)	5 (127)			16 (406)	51 3/4 (1314)	14 (356)	6 7/8 (175)	22 1/2 (572)	5 (127)		
		284TS-286TS																
		324TS-326TS		51 3/4 (1314)														
		364TS																
5 BC†		213T-215T		46 1/2 (1181)	15 (381)	4 9/16 (116)	25 (635)		6 (152)	7 1/2 (191)		46 1/2(1181)	15 (381)	6 7/16 (164)	25 (635)		6 (152)	7 1/2 (191)
		254T										51 3/4 (1314)						
		256T				6 7/16 (164)												
		284T		51 3/4(1314)														
5 E†		254T-256T		46 1/2(1181)		4 7/16 (113)	25 1/2 (648)		5 7/16 (138)	7 15/16 (202)				4 7/16 (113)	25 1/2 (648)		5 7/16 (138)	7 15/16 (202)
		284T-286T		51 3/4 (1314)														
		324T																
5 G†		254T-256T	24 (610)	56 (1422)	16 1/2 (419)	5 7/16 (138)	29 1/2 (749)	6 (152)	6 (152)	9 (229)	24 (610)	56 (1422)	16 1/2 (419)	5 7/16 (138)	29 1/2 (749)	6 (152)	6 (152)	9 (229)
		284T-286T																
		324T-326T																
		364T-365T																
6 BC†	8	254T-256T	16 (406)	46 1/2(1181)	15 (381)	8 3/8 (213)	25 1/2 (648)	5 (127)	7 (178)	8 1/4 (210)	16 (406)	51 3/4 (1314)	15 (381)	8 3/8 (213)	25 1/2 (648)	5 (127)	7 (178)	8 1/4 (210)
		284T-286T		51 3/4 (1314)														
		324T-326T																
6 E†		254T-256T	24 (610)	56 (1422)	16 1/2 (419)	6 (152)	27 1/2 (699)	6 (152)	6 1/8 (156)	8 1/2 (216)	24 (610)	56 (1422)	16 1/2 (419)	6 (152)	27 1/2 (699)	6 (152)	6 1/8 (156)	8 1/2 (216)
		284T-286T																
		324T-326T																
		364T																
6 G†*		"L" FRAME – TO AND INCLUDING 12 1/2" IMPELLER																
		256T	24 (610)	56 (1422)	16 1/2 (419)	6 1/4 (159)	30 1/2 (775)	6 (152)	6 1/2 (165)	9 5/16 (237)	24 (610)	56 (1422)	16 1/2 (419)	6 1/4 (159)	30 1/2 (775)	6 (152)	6 1/2 (165)	9 5/16 (237)
		284T-286T																
		324T-326T																
		364T-365T																
		404TS																
		"XL" FRAME – 12 5/8" IMPELLER AND LARGER																
		365TS	26 (660)	59 1/4 (1505)	17 (432)	6 1/2 (165)	31 (787)	6 (152)	6 1/2 (165)	9 5/16 (237)	26 (660)	59 1/4 (1505)	17 (432)	6 1/2 (165)	31 (787)	6 (152)	6 1/2 (165)	9 5/16 (237)
		404TS-405TS																

These dimensions are not to be used for installation purposes unless certified.

†250 psi (17 bar) available

Maximum Working Pressure 175 psi (12 bar)

*13 1/2" impeller for 1450 RPM service with "L" frame.

8G ONLY

DIMENSIONS – INCHES (MM)			STUFFING BOX CONSTRUCTION PUMP MODEL 1510-S						
PUMP SIZE DISCHARGE	SUCTION SIZE	MOTOR FRAME SIZE	HA	HB	HD	HL	HO	HP	Y
8G (203)	10 (254)	284T-445TS	28 (711)	70 (1778)	18 1/4 (464)	.44 (11)	35.7 (907)	1 1/4 (32)	4 3/4 (121)

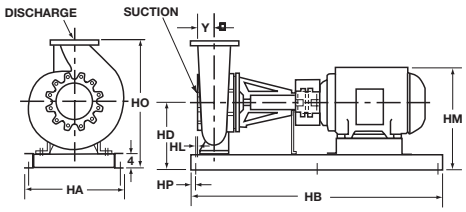

Flanges are: 125# ANSI - Standard

THE B&G End Suction Pump System

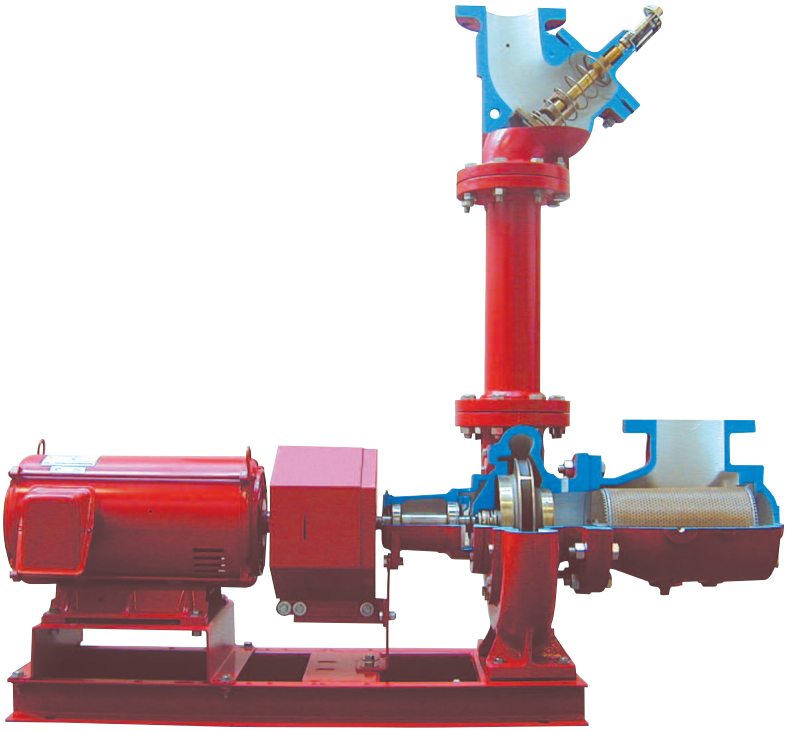

Consists of:

B&G Series 1510 Pump
B&G Triple Duty Valve
B&G Suction Diffuser

Triple Duty Valve

- Lowest Pressure Drop
- ASHRAE 90.1 Energy Efficient Design
- Three Valves in one!
  - Nonslam drip-tight check valve
  - Positive shutoff valve
  - Calibrated system balance valve
- EPDM Disc Soft Seat Design
- Repack Under Pressure
- Brass Seat & Bronze Disc
- Stainless Steel Stem
- Multi-turn Valve (8-9 turns) vs 1/4 turn range of control
- Available connections – Threaded – Flanged – Grooved
- ESP-Plus System Selection

Suction Diffuser

- Full length stainless steel straightening vanes
- Oversize cylinder assures minimum strainer pressure drop
- Pressure gauge tap
- Magnetic drain plug to protect pump seals
- Adjustable support foot
- Space saving design reduces the "footprint" size of the unit
- Available connections – Threaded – Flanged – Grooved
- Reducer and elbow provide multiple combinations of inlet and pump suction configurations which eliminate the need for reducer fittings
- ESP-Plus System Selection

Typical Specification for Series 1510 Base Mounted, Flexible Coupled, End-Suction Pumps

Furnish and install pumps with performance characteristics as shown on plans. Pumps shall be base mounted, single stage, end suction design with a foot mounted volute to allow removal and service of the entire rotating assembly without disturbing the pump piping, electrical motor connections or pump to motor alignment.

A CSA certified condition monitor shall be installed on the pump power end to continuously measure vibration and temperature at the outboard bearing. Vibration modes shall be based on ANSI/HI 9.6.4-2009 and ISO 101816 recommended levels. Vibration alarms shall be at 100% increase over pump baseline. Minimum vibration of 0.125 inch/sec is required to avoid nuisance tripping. A high vibration alarm shall be at 0.50 inch/sec. Temperature alarm shall be at 195°F (91°C). The condition monitors' electronics shall be potted in epoxy and surrounded by a stainless steel enclosure. Accuracy shall be +/- 15% within an ambient temperature range of -40°F to 212°F (-40°C to 100°C).

Pump volute shall be Class 30 cast iron with integrally-cast pedestal support feet. The impeller shall be cast bronze enclosed type, balanced to ANSI/HI 9.6.4-2009 balance grade G6.3 and keyed to the shaft and secured by a locking capscrew.

The liquid cavity shall be sealed off at the pump shaft by an internally-flushed mechanical seal with ceramic seal seat and carbon seal ring, suitable for continuous operation at 225°F (107°C). A replaceable bronze shaft sleeve shall completely cover the wetted area under the seal.

Pump shall be rated for minimum of 175 psi (12 bar) working pressure. Volute shall have gauge tappings at the suction and discharge nozzles and vent and drain tappings at the top and bottom.

The pump(s) vibration limits shall conform to Hydraulic Institute ANSI/HI 9.6.4-2009 for recommend acceptable unfiltered field vibration limits (as measured per ANSI/HI 9.6.4-2009 Figure 9.6.4.2.3.1) for pumps with rolling contact bearings.

Baseplate shall be of structural steel or fabricated steel channel with fully enclosed sides and ends, and securely welded cross members. Grouting area shall be fully open. The combined pump and motor baseplate shall be sufficiently stiff as to limit the susceptibility of vibration. The minimum baseplate stiffness shall conform to ANSI/HI 1.3-2009 for Horizontal Baseplate Design standards.

The seismic capability of the pump shall allow it to withstand a horizontal load of 0.5g, excluding piping and/or fasteners used to anchor the pump to mounting pads or to the floor, without adversely affecting pump operation.

A flexible type, center drop-out design coupler, capable of absorbing torsional vibration, shall be employed between the pump and motor. Pumps for variable speed application shall be provided with a suitable coupler sleeve. The coupling shall be shielded by a dual rated ANSI B15.1 & OSHA 1910.219 compliant coupling guard and contain viewing windows for inspection of the coupling.

Motor shall meet NEMA and EISA 2007 (where applicable) specifications and shall be of the size, voltage and enclosure called for on the plans. Pump and motor shall be factory aligned, and shall be realigned by the contractor per factory recommendations after installation.

The pump(s) selected shall conform to ANSI/HI 9.6.3.1 standards for Preferred Operating Region (POR) unless otherwise approved by the engineer.

Each pump shall be factory hydrostatically tested per Hydraulic Institute standards. It shall then be thoroughly cleaned and painted with at least one coat of high grade paint prior to shipment.

The pump(s) shall be manufactured, assembled and tested in an ISO 9001 approved facility.

Pumps shall be Series 1510 as manufactured by Xylem Bell &Gossett or equal.

Xylem |ˈzīləm|

1) The tissue in plants that brings water upward from the roots;
2) a leading global water technology company.

We're 12,000 people unified in a common purpose: creating innovative solutions to meet our world's water needs. Developing new technologies that will improve the way water is used, conserved, and re-used in the future is central to our work. We move, treat, analyze, and return water to the environment, and we help people use water efficiently, in their homes, buildings, factories and farms. In more than 150 countries, we have strong, long-standing relationships with customers who know us for our powerful combination of leading product brands and applications expertise, backed by a legacy of innovation.

For more information on how Xylem can help you, go to www.xyleminc.com

xylem
Let's Solve Water

Xylem Inc.
8200 N. Austin Avenue
Morton Grove, Illinois 60053
Phone: (847) 966-3700
Fax: (847) 965-8379
www.xyleminc.com/brands/bellgossett

Bell & Gossett is a trademark of Xylem Inc. or one of its subsidiaries.
© 2011 Xylem Inc. B-207H January 2011

KLING STUBBINS

Appendix A.6
High Efficiency Water Fixtures

HIGH-EFFICIENCY TOILET

Royal® Model Flushometer 111-1.28

EPA GREEN POWER PARTNER

Sloan Valve Company is buying renewable energy certificates to meet 100% of the company's purchased electricity use at its Franklin Park, Illinois facility.

Made with Renewable Energy

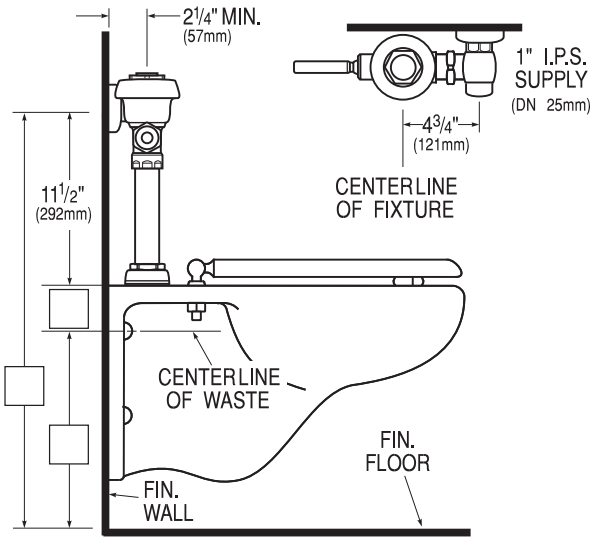

Description

Exposed Water Closet Flushometer, for floor mounted or wall hung top spud bowls.

Flush Cycle

Model 111-1.28 High Efficiency (1.28 gpf/4.8 Lpf)

Specifications

Quiet, Exposed, Diaphragm Type, Chrome Plated Closet Flushometer for left or right hand supply with the following features:

- PERMEX™ Synthetic Rubber Diaphragm with Dual Filtered Fixed Bypass
- ADA Compliant Metal Oscillating Non-Hold-Open Handle with Triple Seal Handle Packing
- 1" I.P.S. Screwdriver Bak-Chek® Angle Stop
- Free Spinning Vandal Resistant Stop Cap
- Adjustable Tailpiece
- High Back Pressure Vacuum Breaker Flush Connection with One-piece Bottom Hex Coupling Nut
- Spud Coupling and Flange for 1½" Top Spud
- Sweat Solder Adapter w/Cover Tube & Cast Wall Flange w/Set Screw
- High Copper, Low Zinc Brass Castings for Dezincification Resistance
- Non-Hold-Open Handle, Fixed Metering Bypass and No External Volume Adjustment to Ensure Water Conservation
- Flush Accuracy Controlled by CID™ Technology
- Diaphragm, Handle Packing, Stop Seat and Vacuum Breaker molded from PERMEX™ Rubber Compound for Chloramine Resistance

Valve Body, Cover, Tailpiece and Control Stop shall be in conformance with ASTM Alloy Classification for Semi-Red Brass. Valve shall be in compliance to the applicable sections of ASSE 1037.

Variations

☐ XVV Valve Less Vacuum Breaker

☐ SG SaniGuard® Antimicrobial Handle and Socket

Accessories

See Accessories Section of the Sloan catalog for details on these and other Flushometer variations.

Fixtures

Consult Sloan for Sloan brand matching fixture options.

Made In The USA

CERTIFIED cradle to cradle SILVER

Buy American Act Compliant

This space for Architect/Engineer approval

Job Name _____ Date _____

Model Specified _____ Quantity _____

Variations Specified _____

Customer/Wholesaler _____

Contractor _____

Architect _____

The information contained in this document is subject to change without notice.

SLOAN®

SLOAN VALVE COMPANY • 10500 SEYMOUR AVE. • FRANKLIN PARK, IL 60131
Ph: 1-800-982-5839 or 1-847-671-4300 • Fax: 1-800-447-8329 or 1-847-671-4380
www.sloanvalve.com

Royal 111-1.28 S.S. — Rev. 1 (11/10)
Copyright © 2010 SLOAN VALVE COMPANY

HEU
HIGH-EFFICIENCY URINAL

Made with Renewable Energy

Buy American Act Compliant

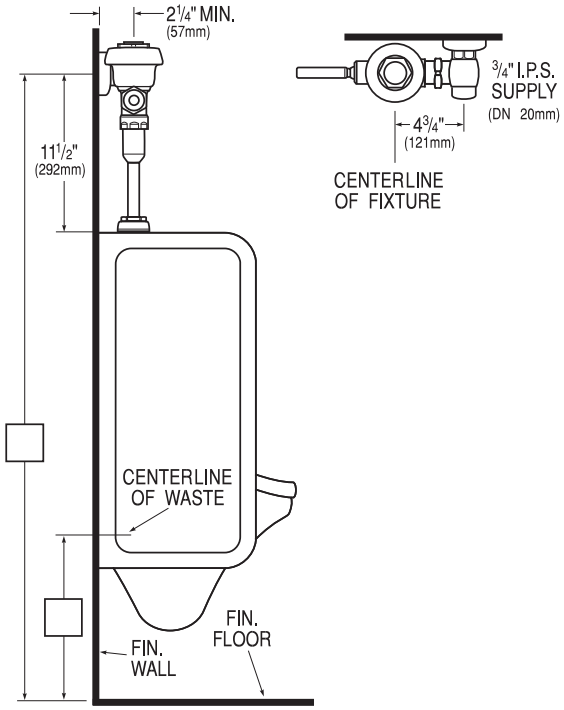

Royal® Model Flushometer 186

Description
Exposed Urinal Flushometer, for ¾" top spud urinals.

Flush Cycle
- ☐ Model 186-0.125 (0.125 gpf/0.5 Lpf)
- ☐ Model 186-0.25 (0.25 gpf/1.0 Lpf)
- ☐ Model 186-0.5 (0.5 gpf/1.9 Lpf)

Specifications
Quiet, Exposed, Diaphragm Type, Chrome Plated Urinal Flushometer with the following features:

- For Flushing Volumes 0.125 and 0.25: Dual Linear Filtered Bypass Diaphragm
- For Flushing Volume 0.5: Dual Filtered Bypass Diaphragm
- ADA Compliant Metal Oscillating Non-Hold-Open Handle with Triple Seal Handle Packing
- ¾" I.P.S. Screwdriver Bak-Chek® Angle Stop
- Free Spinning Vandal Resistant Stop Cap
- Adjustable Tailpiece
- High Back Pressure Vacuum Breaker Flush Connection with One-piece Bottom Hex Coupling Nut
- Spud Coupling and Flange for ¾" Top Spud
- Sweat Solder Adapter w/Cover Tube & Cast Wall Flange w/Set Screw
- High Copper, Low Zinc Brass Castings for Dezincification Resistance
- Non-Hold-Open Handle, Fixed Metering Bypass and No External Volume Adjustment to Ensure Water Conservation
- Flush Accuracy Controlled by CID Technology
- Diaphragm, Handle Packing, Stop Seat and Vacuum Breaker molded from PERMEX® Rubber Compound for Chloramine Resistance

Valve Body, Cover, Tailpiece and Control Stop shall be in conformance with ASTM Alloy Classification for Semi-Red Brass. Valve shall be in compliance to the applicable sections of ASSE 1037 and ANSI/ASME A112.19.2.

Variations
- ☐ HL-3 — 3" Metal Oscillating Push Button on front of valve (does not meet ADA requirements)
- ☐ SG — SaniGuard® Antimicrobial Handle and Socket

Accessories
See Accessories Section of the Sloan catalog for details on these and other Flushometer variations.

Fixtures
Consult Sloan for Sloan brand matching

EPA GREEN POWER PARTNER

Sloan Valve Company is buying renewable energy certificates to meet 100% of the company's purchased electricity use at its Franklin Park, Illinois facility.

U.S. GREEN BUILDING COUNCIL MEMBER

This space for Architect/Engineer approval

Job Name _____ Date _____

Model Specified _____ Quantity _____

Variations Specified _____

Customer/Wholesaler _____

Contractor _____

Architect _____

The information contained in this document is subject to change without notice.

SLOAN®

SLOAN VALVE COMPANY • 10500 SEYMOUR AVE. • FRANKLIN PARK, IL. 60131
Ph: 1-800-982-5839 or 1-847-671-4300 • Fax: 1-800-447-8329 or 1-847-671-4380
www.sloanvalve.com

Copyright © 2011 SLOAN VALVE COMPANY

Efficiency Series

Model
WETS 2000.1001-1.28
Manual HET Flushometer and HET Water Closet

DESCRIPTION

Complete HET system with exposed manual Royal® closet Flushometer and vitreous china fixture.

Flush Cycle

Model WETS 2000.1001-1.28 (1.28 gpf/4.8 Lpf)

HIGH-EFFICIENCY TOILET

SPECIFICATIONS

Quiet, exposed, diaphragm type, chrome plated closet HET Flushometer and HET vitreous china floor mount fixture with the following features:

Flushometer

- PERMEX® Synthetic Rubber Diaphragm with Dual Filtered Fixed Bypass
- Metal oscillating Non-Hold-Open Handle with Triple Seal Handle Packing
- 1" I.P.S. Screwdriver Bak-Chek® Angle Stop
- Free spinning Vandal Resistant Stop Cap
- Adjustable Tailpiece
- High Back Pressure Vacuum Breaker Flush Connection with One-piece Bottom Hex Coupling Nut
- Spud Coupling and Flange for 1 1/2" Top Spud
- Sweat Solder Adapter with Cover Tube and Cast Wall Flange with Set Screw
- High copper, low zinc brass castings for dezincification resistance
- Non-Hold-Open Handle, Fixed Metering Bypass and no external volume adjustment to ensure water conservation
- Flush accuracy controlled by CID® technology
- Diaphragm, Handle Packing, Stop Seat and Vacuum Breaker molded from PERMEX® rubber compound for chloramine resistance
- Valve Body, Cover, Tailpiece and Control Stop shall be in conformance with ASTM Alloy Classification for Semi-Red Brass. Valve shall be in compliance to the applicable sections of ASSE 1037.

Fixture

- Vitreous china
- Floor mounted
- 1 1/2" I.P.S. top spud inlet
- 2 1/8" trapway diameter
- Integral flushing rim
- Elongated bowl
- Siphon jet flush
- Closet bolts and caps included
- 100% factory flush tested
- Toilet seat not included
  Compatible with toilet seat models:
  Olsonite 10CT, Bemis 1955CT, &
  Church Commercial 295CT
- Water closet shall be in compliance to the applicable sections of ASME A112.19.2/CSA B45.1
- Compliant with Buy American Act when purchased as a combination

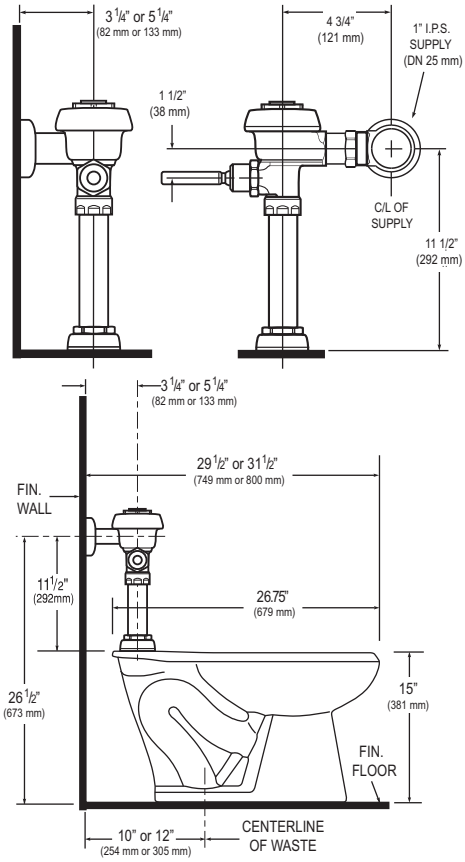

Listed by I.A.P.M.O.

EPA GREEN POWER PARTNER

Sloan Valve Company is buying renewable energy certificates to meet 100% of the company's purchased electricity use at its Franklin Park, Illinois facility.

NOTE:
Plumbing System Requirements
- Minimum Flowing Pressure: 25 PSI
- Minimum Flow Rate: 18 GPM

This space for Architect/Engineer approval

Job Name _____ Date _____

Model Specified _____ Quantity _____

Variations Specified _____

Customer/Wholesaler _____

Contractor _____

Architect _____

The information contained in this document is subject to change without notice.

Sloan Valve Company
10500 Seymour Avenue,
Franklin Park, IL 60131
Phone: 1-800-9-VALVE-9 (982-5839)
or 1-847-671-4300
Fax: 1-800-447-8329 or 1-847-671-4380
www.sloanvalve.com

Copyright © 2010 Sloan Valve Company

Rev. 0b (10/10)

SLOAN®
Efficiency Series

Model
WETS 2050.1001-1.28
Manual HET Flushometer and HET Wall Hung Water Closet

DESCRIPTION

Complete HET system with exposed manual Royal® Flushometer and vitreous china wall hung fixture.

Flush Cycle
Model WETS-2050.1001-1.28 (1.28 gpf/4.8 Lpf)

HET HIGH-EFFICIENCY TOILET

Meets the American Disabilities Guidelines and ANSI A117.1 requirements when installed according to these requirements.

NOTE:
Plumbing System Requirements
- Minimum Flowing Pressure: 25 PSI
- Minimum Flow Rate: 18 GPM

SPECIFICATIONS

Quiet, exposed, diaphragm type, chrome plated HET Flushometer and vitreous china water closet with the following features:

Flushometer
- PERMEX® Synthetic Rubber Diaphragm with Dual Filtered Fixed Bypass
- ADA compliant metal oscillating Non-Hold-Open Handle with Triple Seal Handle Packing
- 1" I.P.S. Screwdriver Bak-Chek® Angle Stop
- Free spinning Vandal Resistant Stop Cap
- Adjustable Tailpiece
- High Back Pressure Vacuum Breaker Flush Connection with One-piece Bottom Hex Coupling Nut
- Spud Coupling and Flange for 1-1/2" Top Spud
- Sweat Solder Adapter with Cover Tube and Cast Wall Flange with Set Screw
- High copper, low zinc brass castings for dezincification resistance
- Non-Hold-Open Handle, Fixed Metering Bypass and no external volume adjustment to ensure water conservation
- Flush accuracy controlled by CID® technology
- Diaphragm, Handle Packing, Stop Seat and Vacuum Breaker molded from PERMEX® rubber compound for chloramine resistance
- Valve Body, Cover, Tailpiece and Control Stop shall be in conformance with ASTM Alloy Classification for Semi-Red Brass. Valve shall be in compliance to the applicable sections of ASSE 1037.

Fixture
- Wall hung vitreous china elongated bowl
- Siphon jet flushing action
- 1-1/2" I.P.S. top spud inlet
- 2 1/8" fully glazed trapway diameter
- Integral flushing rim
- Water spot area 9 1/2" x 8 1/4"
- Mounting hardware, carrier and toilet seat not included
- Compatible with toilet seat models: Olsonite 10CT, Bemis 1955CT & Church Commercial 295CT
- Compatible with carrier model: Jay R. Smith 0210Y-M54
- Water closet shall be in compliance to the applicable sections of ASME A112.19.2/CSA B45.1
- Compliant with Buy American Act when purchased as a combination

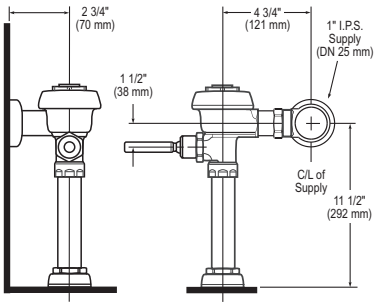

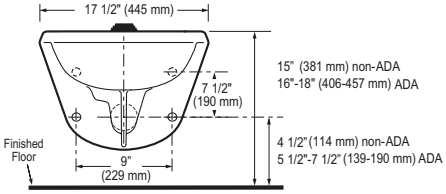

Designed to meet ADA standards when bowl is 17" - 19" high **including seat**

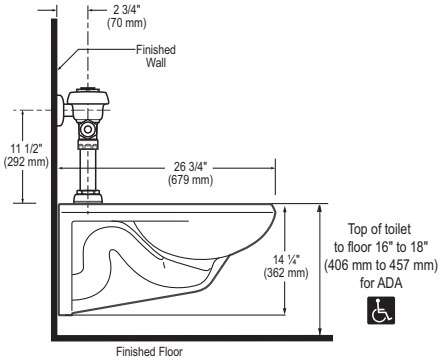

EPA GREEN POWER PARTNER

Sloan Valve Company is buying renewable energy certificates to meet 100% of the company's purchased electricity use at its Franklin Park, Illinois facility.

This space for Architect/Engineer approval

Job Name _____ Date _____

Model Specified _____ Quantity _____

Variations Specified _____

Customer/Wholesaler _____

Contractor _____

Architect _____

The information contained in this document is subject to change without notice.

SLOAN®
Sloan Valve Company
10500 Seymour Avenue
Franklin Park, IL 60131
Phone: 1-800-9-VALVE-9 (982-5839)
or 1-847-671-4300
Fax: 1-800-447-8329 or 1-847-671-4380
www.sloanvalve.com

Copyright © 2010 Sloan Valve Company
Rev. 0b (06/10)

Efficiency Series

Model

WETS 2020.1001-1.28

Manual HET Flushometer and ADA Compliant HET Water Closet

DESCRIPTION

Complete HET system with exposed manual Royal® closet Flushometer and vitreous china ADA compliant fixture.

Flush Cycle

Model WETS 2020.1001-1.28 (1.28 gpf/4.8 Lpf)

HIGH-EFFICIENCY TOILET

Meets the American Disabilities guidelines and ANSI A117.1 requirements when installed according to these requirements

NOTE:
Plumbing System Requirements
- Minimum Flowing Pressure: 25 PSI
- Minimum Flow Rate: 18 GPM

SPECIFICATIONS

Quiet, exposed, diaphragm type, chrome plated HET closet Flushometer and HET vitreous china ADA compliant fixture with the following features:

Flushometer

- PERMEX® Synthetic Rubber Diaphragm with Dual Filtered Fixed Bypass
- ADA compliant metal oscillating Non-Hold-Open Handle with Triple Seal Handle Packing
- 1" I.P.S. Screwdriver Bak-Chek® Angle Stop
- Free spinning Vandal Resistant Stop Cap
- Adjustable Tailpiece
- High Back Pressure Vacuum Breaker Flush Connection with One-piece Bottom Hex Coupling Nut
- Spud Coupling and Flange for 1 1/2" Top Spud
- Sweat Solder Adapter w/Cover Tube and Cast Wall Flange w/Set Screw
- High copper, low zinc brass castings for dezincification resistance
- Non-Hold-Open Handle, Fixed Metering Bypass and no external volume adjustment to ensure water conservation
- Flush accuracy controlled by CID® technology
- Diaphragm, Handle Packing, Stop Seat and Vacuum Breaker molded from PERMEX® rubber compound for chloramine resistance
- Valve Body, Cover, Tailpiece and Control Stop shall be in conformance with ASTM Alloy Classification for Semi-Red Brass. Valve shall be in compliance to the applicable sections of ASSE 1037.

Fixture

- ADA compliant
- Vitreous china
- Floor Mounted
- 1 1/2" I.P.S. top spud inlet
- 2 1/8" trapway diameter
- Integral flushing rim
- Elongated bowl
- Siphon jet flush
- Closet bolts and caps included
- 100 % factory flush tested
- Toilet seat not included
  Compatible with toilet seat models:
  Olsonite 10CT, Bemis 1955CT &
  Church Commercial 295CT
- Water closet shall be in compliance to the applicable sections of ASME A112.19.2/CSA B45.1
- Compliant with Buy American Act when purchased as a combination

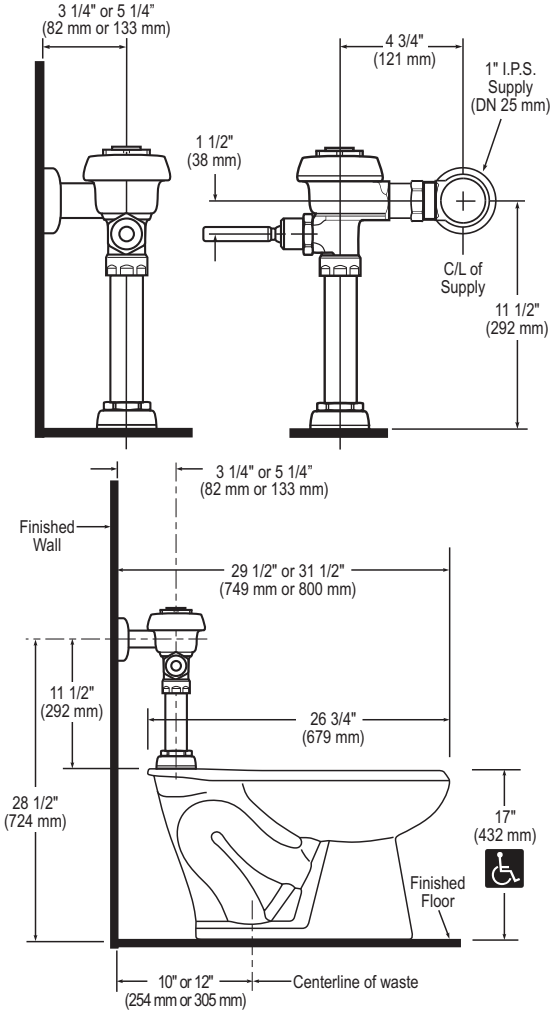

EPA GREEN POWER PARTNER

Sloan Valve Company is buying renewable energy certificates to meet 100% of the company's purchased electricity use at its Franklin Park, Illinois facility.

This space for Architect/Engineer approval

Job Name	Date
Model Specified	Quantity
Variations Specified	
Customer/Wholesaler	
Contractor	
Architect	

The information contained in this document is subject to change without notice.

Sloan Valve Company
10500 Seymour Avenue,
Franklin Park, IL 60131
Phone: 1-800-9-VALVE-9 (982-5839)
or 1-847-671-4300
Fax: 1-800-447-8329 or 1-847-671-4380
www.sloanvalve.com

Copyright © 2010 Sloan Valve Company

Rev. 0b (10/10)

COMMERCIAL PLASTIC SEATS

MODEL 295CT

- **ELONGATED SEAT, OPEN FRONT LESS COVER**
- **SOLID PLASTIC**
- **POSTUREPEDIC CONTOUR DESIGN**
- **STA-TITE®, COMMERCIAL FASTENING SYSTEM™**

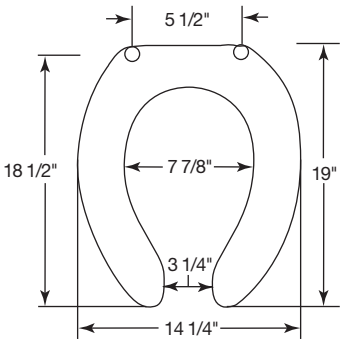

Ring thickness is 13/16"
Ring thickness including the bumper is 1"
Height of Seat is 2-1/4"

Seats shall be No. _____ as manufactured by Church Seats. Seats shall be heavy weight and injection-molded of solid plastic. Seats shall be open front less cover for elongated bowl and feature exclusive Posturepedic contour design and four large molded-in bumpers. Seats shall have STA-TITE®, Commercial Fastening System™, featuring concealed check hinges with 300 Series stainless steel posts and pintles that stop seat 11 degrees beyond vertical.

Color to be _____.
(Specify white or fixture manufacturer's color.)

Hinges shall be 295CT / 295SSCT.
(Circle model based on description below.)

295CT Concealed check hinge stops seat 11° beyond vertical.
295SSCT Self-sustaining, concealed check hinge holds seat in any raised position up to 11° beyond vertical.

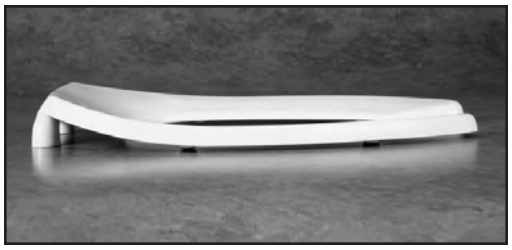

STATITE®

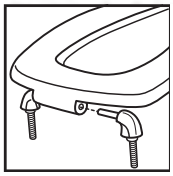

Assemble hinges.

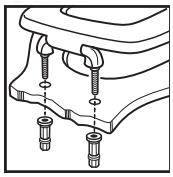

Finger-tighten fastening nuts.

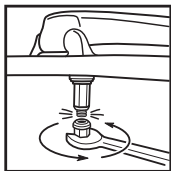

Using wrench, tighten until lower portion shears off.

Church Seats, Sheboygan Falls, WI 53085
www.ChurchSeats.com

Phone: 920-467-2664 800-233-7328 Fax: 920-467-8573

KLING STUBBINS

Appendix A.7
Air Handling Unit – Pre-Balancing Test Report and New Airflows

Appendix A.7
McCormack AHU Pre-Balancing Test Report and New Airflows

Unit #	Actual Airflow (CFM)	Actual S.P. (in W.C.)	**Recommended Airflow (CFM)**	Resulting S.P. (in W.C.)	Service	Location
AHU-1	25,550	10.69	**31,360**	Static pressure to be below maximum static pressure rating of ducts	Induction Units	Level 7
AHU-2	17,850	4.89	**29,290**		Induction Units	Level 7
AHU-3	22400**	9.50	**36,985**		Induction Units	Level 22
AHU-4	42,717	8.95	**42,240**		Induction Units	Level 22
AHU-5	38,949	9.50	**39,565**		Interior	Level 22
AHU-6	31,108	9.50	**39,565**		Interior	Level 22
AHU-7	34,430	8.30	**39,565**		Interior	Level 22
AHU-8	36,700	7.10	**39,565**		Interior	Level 22
AHU-9	28,340	5.92	**37,025**		Interior	Level 7
AHU-10			**-**		Interior	Level 7
AHU-11	25,320	6.08	**34,550**		Interior	Level 7
AHU-12	34,440	4.90	**36,990**		Interior	Level 7
AHU-13	23,440	9.25	**-**		8th Floor	Level 7
AHU-14	12,590	3.95	**20,470**		Kitchen and Café	Level 7
AHU-15	7,200	2.73	**15,770**		Main Lobby	Level 7
AHU-16			**-**		8th Floor Data Center	Level 7

**Balancer unsure of duct size. Calculated 22,400 CFM, but in following other AHU factors, calculates to 32,xxx CFM

KLING STUBBINS

Appendix A.8
Level 7 - Air Handling Unit Ductwork Changes

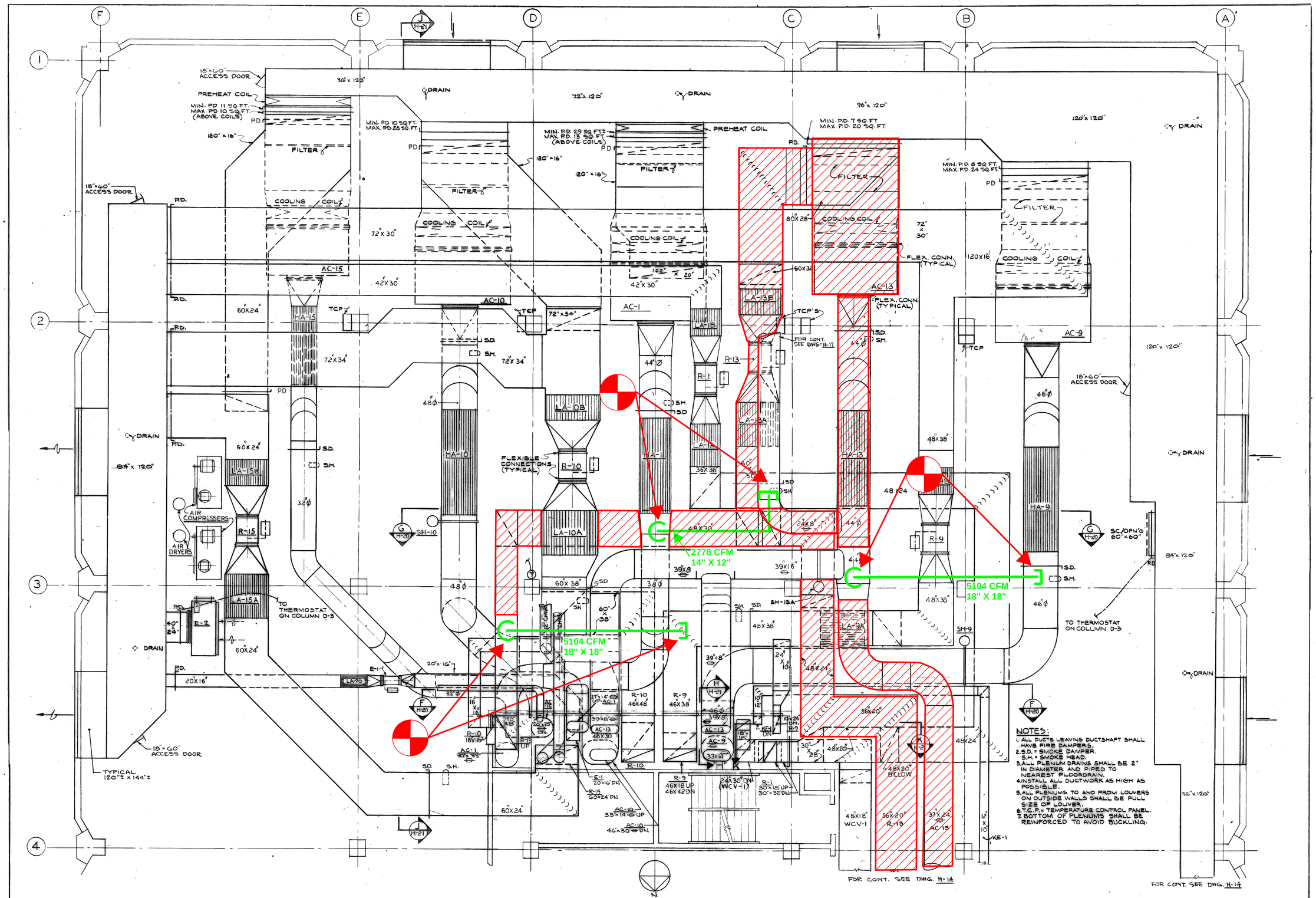

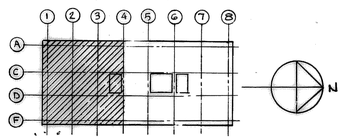

SEVENTH FLOOR MECH. ROOM SOUTH - DUCTWORK

NO	REVISIONS	DATE

SCALE ¼"=1'-0"
DATE AUG. 2, 1972
COMM 1430
APPROVED L.L.L.

GOVERNMENT CENTER COMMISSION
OFFICE BUILDING
ONE ASHBURTON PLACE
HOYLE, DORAN AND BERRY, INC. ARCHITECTS BOSTON

H-15

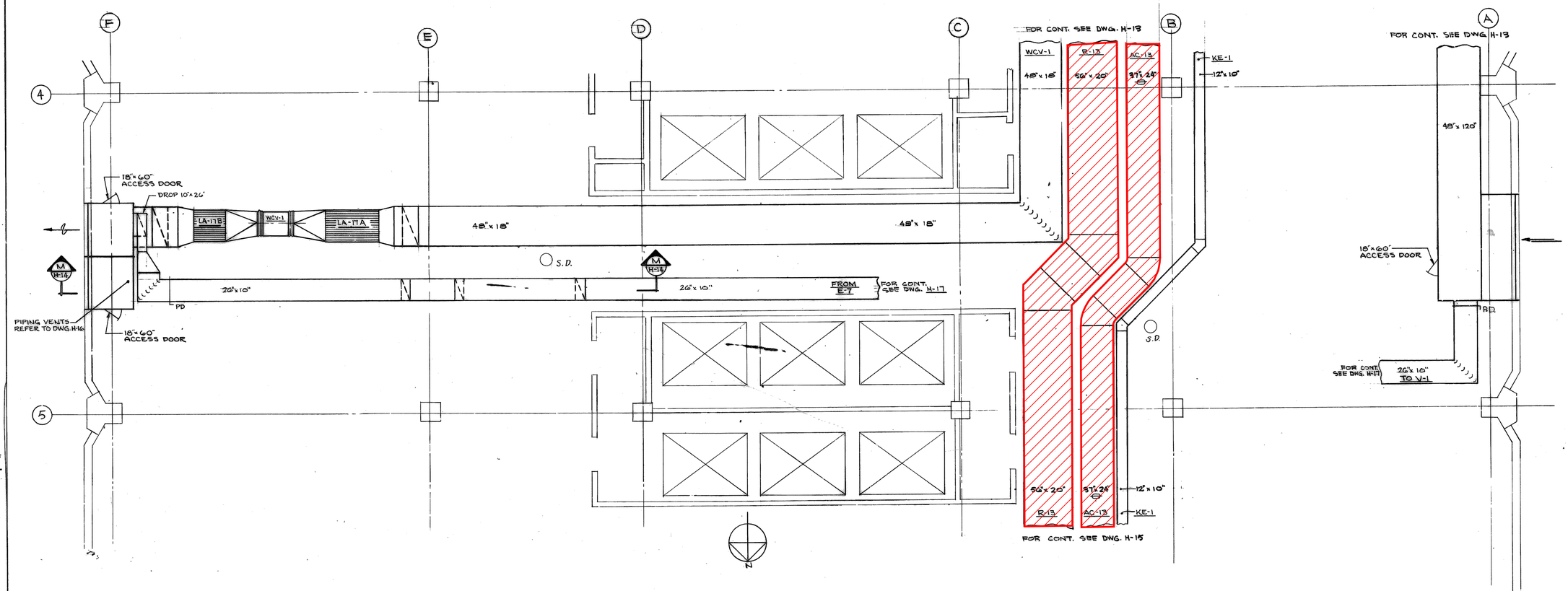

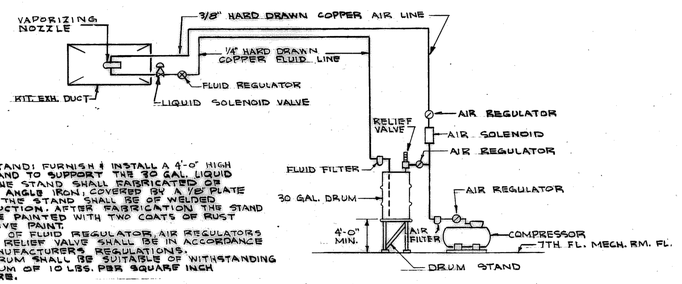

NOTES:
1. DRUM STAND: FURNISH & INSTALL A 4'-0" HIGH DRUM STAND TO SUPPORT THE 30 GAL. LIQUID DRUM. THE STAND SHALL FABRICATED OF 1¼" x 1¼" ANGLE IRON, COVERED BY A 1/8" PLATE ON TOP. THE STAND SHALL BE OF WELDED CONSTRUCTION. AFTER FABRICATION THE STAND SHALL BE PAINTED WITH TWO COATS OF RUST PREVENTIVE PAINT.
2. SETTING OF FLUID REGULATOR, AIR REGULATORS AND AIR RELIEF VALVE SHALL BE IN ACCORDANCE WITH MANUFACTURER'S REGULATIONS.
3. LIQUID DRUM SHALL BE SUITABLE OF WITHSTANDING A MINIMUM OF 10 LBS. PER SQUARE INCH PRESSURE.

AIR KEM DETAIL
NO SCALE

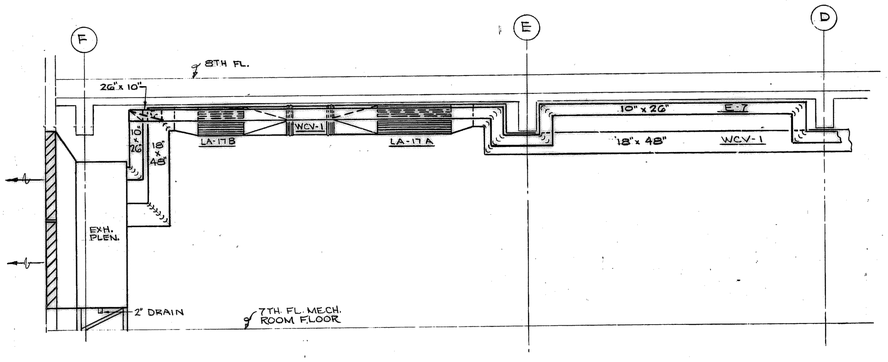

SECTION M H-14
SCALE: 1/4" = 1'-0"

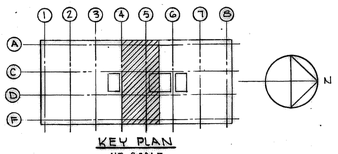

KEY PLAN
NO SCALE

SEVENTH FLOOR MECH. ROOM CENTER-DUCTWORK

NO	REVISIONS	DATE

SCALE: AS NOTED
DATE: AUG. 2, 1972
COMM: 1430
APPROVED: L.L.L.

GOVERNMENT CENTER COMMISSION
OFFICE BUILDING
ONE ASHBURTON PLACE
HOYLE, DORAN AND BERRY, INC. ARCHITECTS BOSTON

H-14

2552 CFM
14" X 12"

2552 CFM
14" X 12"

2552 CFM
14" X 12"

2778 CFM
14" X 12"

2552 CFM
14" X 12"

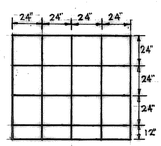

CARBON FILTER DETAIL
(FRONT ELEV.)
NO SCALE

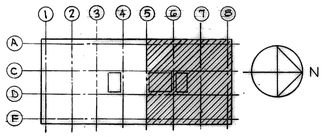

KEY PLAN
NO SCALE

SEVENTH FLOOR MECH. ROOM NORTH - DUCTWORK

NO	REVISIONS	DATE

SCALE 1/4" = 1'-0"
DATE AUG. 2, 1972
COMM 1430
APPROVED L.L.L.

GOVERNMENT CENTER COMMISSION
OFFICE BUILDING
ONE ASHBURTON PLACE
HOYLE, DORAN AND BERRY, INC. ARCHITECTS BOSTON

H 15

KLING STUBBINS

Appendix B
ECM Matrix and Cost Estimate

Commonwealth of Massachusetts
Division of Capital Asset Management (DCAM)
Energy Upgrades - McCormack, Lindemann and State House
Project Number DCP1021 ES1

RECOMMENDED ECM Summary Matrix - McCormack

	OPTIONAL
	DM

TOTAL PROJECT COST	$20,029,890	$23,249,504	$29,042,014

Bldg	Paragraph in Report	ECM Number	ECM Description	Summary of Proposed ECM	Revised Cost ($)	Revised Cost ($) 11/12/2012	Reason for Change in Cost Estimate	Annual Savings ($/yr)	Simple Payback Period (years)		Comment
	13	1.02	Lighting replacements	Maintain existing T8 technology and upgrade existing T12s to T8. Provide new CFL and LED bulbs to replace existing incandesent bulbs	7,051			1,971	3.6		Recommended
	13	2.01	Lighting controls	Retrotfit areas with automated controls (occupancy sensors, daylight harvesting (though this will include some ballast replacements)	1,154,709	3,307,061	Number of dimmable ballasts increased from 1,803 to 8,264. The original estimate was based on daylight harvesting (exterior zone) lighting only, while the	106,584	10.8		(Cost minus incentive) Worst case wired control (typical industry design). Additional design for wireless controls with addressable dimmable ballasts (with a cost of $962,519 for a payback without incentive of 17.4 years, and with potential utility rebates of $234,430
	11.7	3.01	Replace Garage Exhaust fan motors	Replace pump and fan motors greater than 5 hp with more efficient model	3,300	6,356		65	50.8		Controllers are necessary.
	12	4.01	Energy dashboard	Install energy dashboard to visualize building energy consumption and trending	24,210	6,324		14,000	1.7	optional	Recommended as a pilot installation in one building
		4.10	Replace pneumatic controls with DDC controllers	Replace pneumatic logic and actuation at air handling units and central plant with DDC controls	876,600	4,248,330	Original based solely on AHUs. New estimate includes AHUs and central plant, VAV boxes, etc	10,000	87.7	DM	Recommended. If this item is elected, Items 4.13 (chilled water temperature reset and optimized start/stop) will not be required. The controls portion of Items 17.03 (VAV), 9.01 (chilled water distribution) and 17.09 (economizers) will also not be required.
	11.19	4.13	Condenser water temperature relief	Allow condenser water supply temperature to drift down under low wet-bulb conditions	900	0		4,000	0.2		Recommended
	11.22	4.13.1	Optimized air handling unit start/stop	Start and stop air handling units based on predicted outside air and room air temperatures							Recommended. Cost: $900, Savings: $5,000
	10.2.3	4.13.2	Chilled water temperature reset	Reset chilled water supply temperature during offpeak times	900	0		2,800	0.3	optional	Recommended
	15.2	5.03	Reduce cooling tower makeup water	Optimize cycles of concentration in consultation with water treatment vendor	900	0		1,000	0.9		Recommended
	15.3	5.03.1	Recover cooling coil condensate	Collect condensate from cooling coils and use for cooling tower makeup	158,963	122,635		9,500	16.7	Optional	Recommended
	15.1	5.06	Replace toilet fixtures	Replace valves at toilet fixtures (water closets, urinals, lavatories) with low flow type	539,360	455,800		17,500	30.8	optional	Recommended
	11.9	9.01	Chilled water distribution improvement	Replace 3-way cooling coil control valves with 2-way type, and install variable speed drives on secondary chilled water pumps	65,325	0		42,000	1.6		Recommended
	11.7	10.00	Insulate domestic hot water heaters	Insulate domestic hot water heat exchangers to reduce heat loss to surrounding room	8,100	9,137		1,200	6.8	DM	Recommended
	11.6	10.00.1	Insulate pumps	Insulate hot water and chilled water pumps to reduce heat loss to surrounding room	5,015	44,415		2,720	1.8	optional	Recommended
	14.3	11.01	Vending machine power reduction	Delamp vending machines and deenergize when area is unoccupied	675	635		720	0.9		Recommended. ECM applied to coolers with nonperishable goods.
	16.2	12.01	Inner window	Install a second window inside of the existing single pane windows	2,625,000	2,467,500		150,000	17.5		Even though payback is extended, recommended to improve occupant comfort
	10.2.12	15.02	Condenser water heat recovery	Use condenser water to preheat domestic hot water, or use condenser water as input to second chiller to generate hot water	35,513	43,776		2,600	13.7		Recommended (per mtg with DCAM & BSB on 12/19/2011). Condenser water is available year-round from data center chiller.
		17.00	Replace induction unit controls	Replace controls from pneumatic to DDC	4,624,000	1,569,330	The scope of work for this ECM was refined after meeting with the controls contractor (ENE)	70,720	65.4		Recommended (per mtg with DCAM & BSB on 12/19/2011). Estimated cost is $3,400 per unit.
	11.10	17.00.1	Reduce duct leakage	Seal large ductwork in mechanical rooms with aerosol-sealant	3,840	3,610		21,000	0.2		Recommended as a pilot installation in one building
	11.11	17.02	Low-resistance air filters	Replace filters with low pressure-drop model							Recommended. Cost: $23,487, Savings: $28,500
	11.1	17.02.1	Synchronous fan drives	Use cogged fan belts and pulleys to reduce power transmission loss							Recommended. Cost: $41,160, Savings: $17,000
		17.02.2	Replace air handling units	Like-kind replacement of air handling units (except AC-10 & 16)	7,875,000	8,321,788	Airflows increased. Also includes now the cost of return fans, new ductwork, sheaves and pulleys	12,000	656.3	DM	Recommended. This ECM will encompass savings from 17.02 (synchronous drives and low-resistance filters) and 4.13 (optimized start/stop).
	11.2	17.03	Replace constant volume air distribution with variable volume	Replace constant volume boxes with variable volume boxes, install variable speed drives on fans	976,500	1,515,123		270,000	3.6		Recommended
	11.14	17.09	Reactivate economizers	Upgrade controls and repair outside air and relief air dampers so that airside economizer cycle can be used	664,380	31,076		81,000	8.2		Recommended. If no AHUS these must be done
	11.13	17.10	Demand control ventilation	Install carbon-dioxide sensors in conference rooms to reduce supply airflow when room is unoccupied	34,650	7,699		13,200	2.6		Recommended
	11.5	23.00	Replace pumps with higher-efficiency model	Replace chilled water, heating hot water and condenser water pumps with more efficient model	345,000	370,125		6,555	52.6	DM	Recommended (per mtg with DCAM & BSB on 12/19/2011). DCAM/BSB to forward list of pumps that were recently replaced.
			Engineering, FP, Training			718,784					

TOTAL PROJECT	$ 20,029,890.37	$ 23,249,504.00	$ 841,134.94	23.81
TOTAL w/out OPTIONALS:	#VALUE!	$ 22,611,193.00	$ 768,794.94	#VALUE!
Total DM	$ 1,709,220.37		$ 127,254.94	13.43
TOTAL w/out DM or OPTIONAL:	#VALUE!		$ 641,540.00	#VALUE!

Notes:

1: Not including utility rebates.

Evaluated but to be done "in House" or included in another project:

7	4.09	Retrocommissioning & Commissioning	Retrocommissioning of air handling units, central plant and distribution equipment & commissioning of new equipment	840,000			80,000	10.5		Recommended
7.4	19.00	Measurement and verification	Instrumentation to monitor utilities on an ongoing basis	600,000			14,500	41.4		Recommended with temporary instrumentation to prove savings

Line No.	Building	BOD #	ECM #	ECM Description	Summary of ECM	Estimated # of Instances / Description of Work	QTY	UNIT			MAN-HOUR RATE	LABOR RATE	MATERIAL Unit Price	DIRECT UNIT COST	CONTRACTOR MARK-UP & CONTINGENCY	TOTAL COST	TOTAL UNIT PRICE
71.	McCormack			Engineering Cost by Design/Build Contractor		3% of "construction" total cost										$ 678,000	
72.	McCormack	11.00		Training and Maintenance (include professional video tapping of training sessions)			1	LS						$ 14,500.00	41%	$ 20,445	$ 20,445
73.	McCormack	11.00		Develop training and maintenance program (part of Engineering cost)			1	LS									
74.	McCormack	11.00		Provide training session			1	LS			40.00	$ 150.0	$ 1,000.00	$ 7,000.00	41%	$ 9,870	
75.	McCormack	11.00		Video tape training session (no editing)			1	LS			40.00	$ 187.5		$ 7,500.00	41%	$ 10,575	
76.	McCormack	7.40 & 7.50		Fire protection system	Modifications at mechanical rooms to accommodate changes made		1	LS						$ 14,850.00	41%	$ 20,939	$ 20,939
77.	McCormack	7.40		Fire protection system	Relocate sprinkler heads	Assumed 20 heads per mechanical mechanical space	2	EA			30.00	$ 85.0	$ 1,000.00	$ 3,550.00	41%	$ 10,011	
78.	McCormack	7.40		Fire protection system	Piping to relocate sprinkler heads	Assumed 100 feet per mechanical space	2	EA			35.00	$ 85.0	$ 900.00	$ 3,875.00	41%	$ 10,928	
80.	McCormack		17.02	Replace air handling units	Like-kind replacement of air handling units (except AHU's 10, 13 & 16)	13 AHUs (between 16,000 - 40,000 CFM)	13	EA						$ 430,000.00	41%	$ 7,881,900	$ 606,300
81.	McCormack	5.4.3.c		Replace air handling unit AHU-1			1	EA				$ 85.0		$ 392,000.00	41%	$ 552,720	
82.	McCormack	5.4.3.c		Replace air handling unit AHU-2			1	EA				$ 85.0		$ 366,125.00	41%	$ 516,236	
83.	McCormack	5.4.3.c		Replace air handling unit AHU-3			1	EA				$ 85.0		$ 462,312.50	41%	$ 651,861	
84.	McCormack	5.4.3.c		Replace air handling unit AHU-4			1	EA				$ 85.0		$ 528,000.00	41%	$ 744,480	
85.	McCormack	5.4.3.c		Replace air handling unit AHU-5			1	EA				$ 85.0		$ 494,562.50	41%	$ 697,333	
86.	McCormack	5.4.3.c		Replace air handling unit AHU-6			1	EA				$ 85.0		$ 494,562.50	41%	$ 697,333	
87.	McCormack	5.4.3.c		Replace air handling unit AHU-7			1	EA				$ 85.0		$ 494,562.50	41%	$ 697,333	
88.	McCormack	5.4.3.c		Replace air handling unit AHU-8			1	EA				$ 85.0		$ 494,562.50	41%	$ 697,333	
89.	McCormack	5.4.3.c		Replace air handling unit AHU-9			1	EA				$ 85.0		$ 462,812.50	41%	$ 652,566	
90.	McCormack	5.4.3.c		Replace air handling unit AHU-11			1	EA				$ 85.0		$ 431,875.00	41%	$ 608,944	
91.	McCormack	5.4.3.c		Replace air handling unit AHU-12			1	EA				$ 85.0		$ 462,375.00	41%	$ 651,949	
93.	McCormack	5.4.3.c		Replace air handling unit AHU-14			1	EA				$ 85.0		$ 255,875.00	41%	$ 360,784	
94.	McCormack	5.4.3.c		Replace air handling unit AHU-15			1	EA				$ 85.0		$ 197,125.00	41%	$ 277,946	
96.	McCormack	4.4.A		Replace air handling units	New house keeping pad for AHU		13	EA			32.00	$ 85.0	$ 600.00	$ 3,320.00	41%	$ 60,856	
97.	McCormack	5.4.3.g		Replace air handling units	Air handlers to have VFD's (included in price of air handler)												
98.	McCormack		15.02	Condenser water heat recovery	Use condenser water to preheat domestic hot water, or use condenser water as input to second chiller to generate hot water	Heat exchanger, pumps, piping, controls	1	LS						$ 31,039.50	41%	$ 43,766	$ 43,766
99.	McCormack	5.4.3.f	15.02	Condenser water heat recovery	ASSUMED QUANTITY	Pumps (2 duplex sets/system per Mech Engr)	4	EA			1.00	$ 85.0	$ 465.00	$ 550.00	41%	$ 3,102	
100.	McCormack	5.4.3.f	15.02	Condenser water heat recovery	ASSUMED QUANTITY (100' EA)	Piping	400	LF			0.19	$ 85.0	$ 5.70	$ 21.85	41%	$ 12,323	
101.	McCormack	5.4.3.f	15.02	Condenser water heat recovery	ASSUMED QUANTITY	Controls	4	EA			16.00	$ 85.0	$ 640.00	$ 2,000.00	41%	$ 11,280	
102.	McCormack	5.4.3.f		Condenser water heat recovery	Heat exchanger	2 per system per Mech Engr; ASSUMED EACH 7.5 gpm	2	EA			4.00	$ 85.0	$ 1,800.00	$ 2,140.00	41%	$ 6,035	
103.	McCormack	not in BOD		Condenser water heat recovery	Pipe insulation		400	LF			0.07	$ 85.0	$ 1.00	$ 7.21	41%	$ 4,064	
104.	McCormack	not in BOD		Condenser water heat recovery	Equipment insulation	Assume 30 SF Each	60	SF	2	30	0.73	$ 85.0	$ 3.83	$ 65.63	41%	$ 5,552	
105.	McCormack	4.4.c		Condenser water heat recovery	House keeping pads for heat exchanger		2	EA					$ 500.00	$ 500.00	41%	$ 1,410	
106.	McCormack		17.02	Synchronous fan drives	Use cogged fan belts and pulleys to reduce power transmission loss	27 - Remove existing pulleys, belts, sheaves, and provide new	14	EA						$ 921.20	41%	$ 18,184	$ 1,299
107.	McCormack	5.4.3.c and 5.4.3.d	17.02	Synchronous fan drives	NEW PULLEYS, BELTS AND SHEAVES (AHU come with appropriate pulleys, belts and sheaves)	14	14	EA			8.00	$ 85.0	$ 300.00	$ 980.00	41%	$ 19,345	
108.	McCormack		17.03	Replace constant volume air distribution with variable volume	Replace constant volume boxes with variable volume boxes, install variable speed drives on fans	672 VAV Boxes (VFDs supplied w/ new AHUs)	672	EA						$ 1,599.04	41%	$ 1,515,123	$ 2,255
109.	McCormack	5.4.3.h	17.03	Replace constant volume air distribution with variable volume	50-250 CFM VAV BOXES		79	EA			8.00	$ 85.0	$ 850.00	$ 1,530.00	41%	$ 170,427	
110.	McCormack	5.4.3.h	17.03	Replace constant volume air distribution with variable volume	300 -600 CFM VAV BOXES		448	EA			8.50	$ 85.0	$ 860.00	$ 1,582.50	41%	$ 999,634	
111.	McCormack	5.4.3.h	17.03	Replace constant volume air distribution with variable volume	650-1000 CFM VAV BOXES		105	EA			9.00	$ 85.0	$ 880.00	$ 1,645.00	41%	$ 243,542	

Line No.	Building	BOD #	ECM #	ECM Description	Summary of ECM	Estimated # of Instances / Description of Work	QTY	UNIT			MAN-HOUR RATE	LABOR RATE	MATERIAL Unit Price	DIRECT UNIT COST	CONTRACTOR MARK-UP & CONTINGENCY	TOTAL COST	TOTAL UNIT PRICE
112.	McCormack	5.4.3.h	17.03	Replace constant volume air distribution with variable volume	1050-1300 CFM VAV BOXES		40	EA			10.00	$ 85.0	$ 950.00	$ 1,800.00	41%	$ 101,520	
113.	McCormack	5.4.3.p		Induction Unit Local Control	Provide vacancy senors in closed offices. Provide local temperature control thermostats. Provide new electric to pneumatic transducers.		1,325	EA						$ 840.00	41%	$ 1,569,330	$ 1,184
114.	McCormack	5.4.3.p		Induction Unit Local Control	Occupancy senors, relays, wiring and controls per space	Quantity provided by Mech Engr (email dated 10/26/12)	1,325	EA			4.00	$ 85.0	$ 500.00	$ 840.00	41%	$ 1,569,330	
115.	McCormack		23.00	Replace pumps with higher-efficiency model	Replace chilled water, heating hot water and condenser water pumps with more efficient model	15 (including motors)	15	EA						$ 17,500.00	41%	$ 370,125	$ 24,675
116.	McCormack	5.4.3.k	23.00	Replace pumps with higher-efficiency model	Replace pumps; CHWP-7, CH/HWP-8	50 HP	2	EA			66.00	$ 85.0	$ 31,903.00	$ 37,513.00	41%	$ 105,787	
117.	McCormack	5.4.3.k	23.00	Replace pumps with higher-efficiency model	Replace pumps; HWP-9	50 HP	1	EA			36.00	$ 85.0	$ 17,600.00	$ 20,660.00	41%	$ 29,131	
118.	McCormack	5.4.3.k	23.00	Replace pumps with higher-efficiency model	Replace pumps; CHWP-19, CHW-20	40 HP	2	EA			54.00	$ 85.0	$ 17,544.00	$ 22,134.00	41%	$ 62,418	
119.	McCormack	5.4.3.k	23.00	Replace pumps with higher-efficiency model	Replace pumps; CHW-21	40 HP	1	EA			30.00	$ 85.0	$ 11,600.00	$ 14,150.00	41%	$ 19,952	
120.	McCormack	5.4.3.k	23.00	Replace pumps with higher-efficiency model	Replace pumps; DWP-3, DWP-4	30 HP	2	EA			51.00	$ 85.0	$ 15,868.00	$ 20,203.00	41%	$ 56,972	
121.	McCormack	5.4.3.k	23.00	Replace pumps with higher-efficiency model	Replace pumps; DWP-1, DWP-2	15 HP	2	EA			37.00	$ 85.0	$ 12,618.00	$ 15,763.00	41%	$ 44,452	
122.	McCormack	5.4.3.k	23.00	Replace pumps with higher-efficiency model	Replace pumps; CHWP-16,CH/HWP-17,	5 HP	2	EA			24.00	$ 85.0	$ 8,059.00	$ 10,099.00	41%	$ 28,479	
123.	McCormack	5.4.3.k	23.00	Replace pumps with higher-efficiency model	Replace pumps; HWP-18, HWP-22, HWP-23	5 HP	3	EA			14.00	$ 85.0	$ 4,000.00	$ 5,190.00	41%	$ 21,954	
124.	McCormack	5.4.3.g			Pump motors to have VFD's (included with pump replacement where required)												
125.	McCormack		10.00	Insulate pumps	Insulate hot water and chilled water pumps to reduce heat loss to surrounding room	15 pumps - 2" fiberglass insulation	1	LS						$ 31,500.00	41%	$ 44,415	$ 44,415
126.	McCormack	5.4.3.l	10.00	Insulate pumps	50 HP	3 EACH	96	SF	3	32	0.73	$ 85.0	$ 3.83	$ 65.63	41%	$ 8,883	
127.	McCormack	5.4.3.l	10.00	Insulate pumps	40 HP	3 EACH	96	SF	3	32	0.73	$ 85.0	$ 3.83	$ 65.63	41%	$ 8,883	
128.	McCormack	5.4.3.l	10.00	Insulate pumps	30 HP	2 EACH	64	SF	2	32	0.73	$ 85.0	$ 3.83	$ 65.63	41%	$ 5,922	
129.	McCormack	5.4.3.l	10.00	Insulate pumps	15 HP	2 EACH	64	SF	2	32	0.73	$ 85.0	$ 3.83	$ 65.63	41%	$ 5,922	
130.	McCormack	5.4.3.l	10.00	Insulate pumps	5 HP	5 EACH	160	SF	5	32	0.73	$ 85.0	$ 3.83	$ 65.63	41%	$ 14,805	
131.	McCormack		10.00	Insulate domestic hot water heaters	Insulate domestic hot water heat exchangers to reduce heat loss to surrounding room	6 - Plate and frame DWH, 2" fiberglass insulation	6	EA						$ 1,080.00	41%	$ 9,137	$ 1,523
132.	McCormack	5.4.3.l	10.00	Insulate domestic hot water heaters	INSULATE DOMESTIC HOT WATER HEAT EXCHANGERS	6 EACH - Assume unit 6' x 3' x 2'- at $15 per sf.	6	EA				$ 85.0		$ 1,080.00	41%	$ 9,137	
133.	McCormack		3.01	Replace fans and motors	Replace motors with more efficient model	14 Each	14	EA						$ 17,820.00	41%	$ 351,767	$ 25,126
134.	McCormack	5.4.3.d	3.01	Replace fan & motor	40 HP motors (RF-6), 28635 cfm	1 EACH	1	EA			44.00	$ 85.0	$ 22,080.00	$ 25,820.00	41%	$ 36,406	
135.	McCormack	5.4.3.d	3.01	Replace fan & motor	30 HP motors (RF-5, RF-7, RF-8, RF-9, RF-11), 29000 - 34100 cfm	5 EACH	5	EA			42.75	$ 85.0	$ 20,380.00	$ 24,013.75	41%	$ 169,297	
136.	McCormack	5.4.3.d	3.01	Replace fan & motor	25 HP motors (RF-12), 31510 cfm	1 EACH	1	EA			42.00	$ 85.0	$ 19,950.00	$ 23,520.00	41%	$ 33,163	
137.	McCormack	5.4.3.d	3.01	Replace fan & motor	20 HP motors (RF-4), 21120 cfm	1 EACH	1	EA			35.14	$ 85.0	$ 16,210.00	$ 19,196.90	41%	$ 27,068	
138.	McCormack	5.4.3.d	3.01	Replace fan & motor	15 HP motors (RF-1, RF-2, RF-3), 15700 - 18100 cfm	3 EACH	3	EA			33.50	$ 85.0	$ 12,070.00	$ 14,917.50	41%	$ 63,101	
139.	McCormack	5.4.3.d	3.01	Replace fan & motor	7.5 HP motors (RF-15), 9770 cfm	1 EACH	1	EA			25.75	$ 85.0	$ 9,470.00	$ 11,658.75	41%	$ 16,439	
140.	McCormack	5.4.3.d	3.01	Replace motor	5 HP motors (M-1, M-2)	2 EACH	2	EA			6.75	$ 85.0	$ 1,680.00	$ 2,253.75	41%	$ 6,356	
141.	McCormack	5.4.3.d			Fan motors to have VFD's included with motor replacement where required												
142.	McCormack		9.01	Chilled water distribution improvement	Replace 3-way cooling coil control valves with 2-way type	13 Valves	1	LS						$ 26,130.00	41%	$ 36,843	$ 36,843
143.	McCormack	5.4.3.m	9.01	Chilled water distribution improvement	REPLACE CONTROL VALVES	13 EACH	13	EA			6.00	$ 85.0	$ 1,500.00	$ 2,010.00	41%	$ 36,843	
145.	McCormack		17.00	Reduce duct leakage	Seal large ductwork in mechanical rooms with aerosol-sealant	50% of large ductwork on mech. Floors	4	LOC						$ 640.00	41%	$ 3,610	$ 902
146.	McCormack	5.4.3.o	17.00	Reduce duct leakage	SEAL LARGE DUCTWORK	ASSUMED 4 LOCATIONS	4	LOC			4.00	$ 85.0	$ 300.00	$ 640.00	41%	$ 3,610	
149.	McCormack		17.00	Reduce duct leakage	Ductwork at Mechanical Level 7	Ductwork replacement	1	LS						$ 54,108.26	41%	$ 76,293	$ 76,293
150.	McCormack			Reduce duct leakage	Remove ductwork on Mechanical level 7	Ref Dwgs H-13, H-14 & H-15	10,500	LBS			0.04	$ 85.0		$ 3.50	41%	$ 51,818	
151.	McCormack			Reduce duct leakage	New ductwork on Mechanical level 7	Ref Dwgs H-13, H-14 & H-15	1,300	LBS			0.11	$ 85.0	$ 0.80	$ 10.15	41%	$ 18,605	$ 14
152.	McCormack			Reduce duct leakage	Ductwork insuation	Ref Dwgs H-13, H-14 & H-15	860	SF			0.05	$ 85.0	$ 0.34	$ 4.84	41%	$ 5,870	$ 7
153.	McCormack		17.10	Duct Mains Differential Pressure	Differential pressure sensors/wiring/controls to monitor duct mains vs outdoor pressure		1	LS						$ 13,000.00	41%	$ 18,330	$ 18,330
154.	McCormack				Duct pressure sensor/transmitter & controls	Duct pressure monitoring for each AHU	13	pt				$ 85.0	$ 1,000.00	$ 1,000.00	41%	$ 18,330	

Line No.	Building	BOD #	ECM #	ECM Description	Summary of ECM	Estimated # of Instances / Description of Work	QTY	UNIT			MAN-HOUR RATE	LABOR RATE	MATERIAL Unit Price	DIRECT UNIT COST	CONTRACTOR MARK-UP & CONTINGENCY	TOTAL COST	TOTAL UNIT PRICE
156.	McCormack		17.10	Demand control ventilation	Install carbon-dioxide sensors in conference rooms to reduce supply airflow when room is unoccupied	55 Conference Rooms	13	EA						$ 420.00	41%	$ 7,699	$ 592
157.	McCormack	5.4.3.i			Install CO2 sensors in return air duct of AHU's		13	ea			2.00	$ 85.0	$ 250.00	$ 420.00	41%	$ 7,699	
158.	McCormack		17.09	Reactivate economizers	Repair outside air and relief air dampers so that airside economizer cycle can be used		1	LS						$ 22,040.00	41%	$ 31,076	$ 31,076
159.	McCormack	5.4.3.j	17.09	Reactivate economizers	REPAIR DAMPERS	13 AHUx2/EA = 26 EA	26	EA			2.00	$ 85.0	$ 50.00	$ 220.00	41%	$ 8,065	
160.	McCormack	5.4.3.j	17.09	Reactivate economizers	REBALANCING	1 LUMP SUM	1	LS			80.00	$ 170.0	$ 2,720.00	$ 16,320.00	41%	$ 23,011	
161.	McCormack		4.01	Energy dashboard	Install energy dashboard to visualize building energy consumption and trending	Provide monitors, controls, wiring	1	LS						$ 4,485.00	41%	$ 6,324	$ 6,324
162.	McCormack	5.4.3.n	4.01	Energy dashboard	ENERGY DASHBOARD - MONITORS	1 required per Mech Engr (ref. email dated 10-26-12)	1	EA			6.00	$ 85.0	$ 2,000.00	$ 2,510.00	41%	$ 3,539	
163.	McCormack	5.4.3.n	4.01	Energy dashboard	ENERGY DASHBOARD - CONDUIT & WIRE	For 1 monitor only per Mech Engr (ref. email dated 10-26-12); ASSUMED LF/EA (200')	200	LF			0.05	$ 85.0	$ 3.05	$ 6.88	41%	$ 1,939	
164.	McCormack	5.4.3.n	4.01	Energy dashboard	ENERGY DASHBOARD - CONTROLS		1	LS			4.00	$ 150.0		$ 600.00	41%	$ 846	
165.	McCormack			Building Automation System (BAS)			1	LS						$ 3,000,000.00	41%	$ 4,230,000	
166.	McCormack	8.00		Building Automation System (BAS)	New BAS and all controls upgrades		600,000	SF					$ 5.00	$ 5.00	41%	$ 4,230,000	$ 7
167.	McCormack		2.01	Lighting controls	Retrofit areas with automated controls (occupancy sensors, daylight harvesting (though this will include some ballast replacements)	Lighting controls and lamping	1	LS						$ 2,345,433.18	41%	$ 3,307,061	$ 3,307,061
168.	McCormack	9.9.3.b	2.01	Lighting controls	DAYLIGHT HARVESTING - PHOTOCELLS	PHOTOCELLS	795	EA			1.14	$ 85.0	$ 116.00	$ 213.16	41%	$ 238,936	
169.	McCormack	9.9.4	2.01	Lighting controls	DAYLIGHT HARVESTING - DIMMABLE BALLASTS	DIMMABLE BALLASTS	8,264	EA			1.00	$ 85.0	$ 104.00	$ 189.00	41%	$ 2,202,273	
170.	McCormack	9.9.3.a	2.01	Lighting controls	OCCUPANCY SENSORS - WALL SENSOR (PIR)	WALL SENSOR (PIR)	1,144	EA			1.14	$ 85.0	$ 116.00	$ 213.16	41%	$ 343,828	
171.	McCormack	9.9.3.a	2.01	Lighting controls	OCCUPANCY SENSORS - SENSOR (DUAL TECH.)	SENSOR (DUAL TECH.)	350	EA			1.23	$ 85.0	$ 185.00	$ 289.64	41%	$ 142,935	
172.	McCormack	9.9.3.c	2.01	Lighting controls	OCCUPANCY SENSORS - REMOTE POWER PACKS	REMOTE POWER PACKS	1,494	EA			0.80	$ 85.0	$ 38.50	$ 106.50	41%	$ 224,347	
173.	McCormack	9.9.3.c		Lighting controls	Local controllers	Local occupancy sensor switches	1,050	EA			0.33	$ 85.0	$ 68.50	$ 96.81	41%	$ 143,320	
174.	McCormack	9.11.1	2.01	Lighting controls	T8 LAMPING - # OF LAMPS	# OF LAMPS	14	EA			0.15	$ 85.0	$ 12.00	$ 24.75	41%	$ 489	
175.	McCormack	9.11.1	2.01	Lighting controls	T8 LAMPING - # OF FIXTURES (2x2 RECESSED TROFFER)	# OF (2x2 RECESSED TROFFER)	7	EA			1.40	$ 85.0	$ 80.00	$ 199.34	41%	$ 1,967	
176.	McCormack	9.11.1	2.01	Lighting controls	T8 LAMPING - # OF DIFFUSERS	T8 LAMPING - # OF DIFFUSERS	7	EA			0.50	$ 85.0	$ 50.00	$ 92.50	41%	$ 913	
177.	McCormack	9.11.1	2.01	Lighting controls	T8 LAMPING - # OF ELECTRONIC BALLASTS	# OF ELECTRONIC BALLASTS	7	EA			0.50	$ 85.0	$ 20.00	$ 62.50	41%	$ 617	
178.	McCormack	9.11.1	2.01	Lighting controls	NEW CFL LAMPS - # OF LAMPS FOR (DOWNLIGHTS)	# OF LAMPS FOR (DOWNLIGHTS)	40	EA			0.15	$ 85.0	$ 12.00	$ 24.75	41%	$ 1,396	
179.	McCormack	9.11.1	2.01	Lighting controls	NEW CFL LAMPS - # OF 3W LED'S FOR (DOWNLIGHTS)	# OF 3W LED'S FOR (DOWNLIGHTS)	27	EA			0.15	$ 85.0	$ 20.00	$ 32.75	41%	$ 1,247	
180.	McCormack	9.11.1	2.01	Lighting controls	PROGRAMMING	Controls	1	LS			40.00	$ 85.0		$ 3,400.00	41%	$ 4,794	
181.	McCormack		11.01	Vending machine power reduction	Delamp vending machines and de-energize when area is unoccupied	3.00	3	EA						$ 150.00	41%	$ 635	$ 212
182.	McCormack	section 09	11.01	Vending machine power reduction	Occupancy sensor based vending machine control is required	3 EACH	3	EA			1.00	$ 150.0		$ 150.00	41%	$ 635	
183.	McCormack		5.06	Replace toilet fixtures	Replace valves at toilet fixtures (water closets, urinals, lavatories) with low flow type	63 Urinals (1/8 gpf) / 257 Toilets (1.28 gpf)	1	LS						$ 323,262.50	41%	$ 455,800	$ 455,800
184.	McCormack	6.3.4.a and 6.3.4.b	5.06	Replace toilet fixtures	URINALS (1/8 GPF) (assumes carrier in place and usa	63 EACH	63	EA			4.00	$ 85.0	$ 620.00	$ 960.00	41%	$ 85,277	
185.	McCormack	6.3.4.c	5.06	Replace toilet fixtures	TOILETS (1.28 GPF) (assumes carrier in place and usa	257 EACH	257	EA			4.50	$ 85.0	$ 640.00	$ 1,022.50	41%	$ 370,523	
186.	McCormack		5.03	Reduce cooling tower makeup water	Optimize cycles of concentration in consultation with water treatment vendor	Change controls to allow more solids in water, decreasing blowdown	1	LS						$ 600.00	41%	$ 846	$ 846
187.	McCormack	5.01.1.a	5.03	Reduce cooling tower makeup water	PROGRAMMING	Controls	1	LS			4.00	$ 150.0		$ 600.00	41%	$ 846	
188.	McCormack		5.03	Recover cooling coil condensate	Collect condensate from cooling coils and use for cooling tower makeup	13 AHUs - provide piping, pumps, storage tank, controls	1	LS						$ 86,974.93	41%	$ 122,635	$ 122,635
189.	McCormack	5.4.3.e	5.03	Recover cooling coil condensate	PIPING	ASSUMED QTY (100'/Ea tank)	1,300	LF			0.19	$ 85.0	$ 5.70	$ 21.85	41%	$ 40,051	
190.	McCormack	5.4.3.e	5.03	Recover cooling coil condensate	PUMPS	From Mechanical Schedule M-900	20	EA			1.00	$ 85.0	$ 156.00	$ 241.00	41%	$ 6,796	
191.	McCormack	5.4.3.e	5.03	Recover cooling coil condensate	STORAGE TANK	ASSUMED QTY	13	EA			8.00	$ 85.0	$ 2,500.00	$ 3,180.00	41%	$ 58,289	

Line No.	Building	BOD #	ECM #	ECM Description	Summary of ECM	Estimated # of Instances / Description of Work	QTY	UNIT			MAN-HOUR RATE	LABOR RATE	MATERIAL Unit Price	DIRECT UNIT COST	CONTRACTOR MARK-UP & CONTINGENCY	TOTAL COST	TOTAL UNIT PRICE
192.	McCormack	5.4.3.e	5.03	Recover cooling coil condensate	PROGRAMMING	Controls	13	LS			4.00	$ 150.0		$ 600.00	41%	$ 10,998	
193.	McCormack	4.4.B		Recover cooling coil condensate	House keeping pad for tank		13	EA						$ 500.00	41%	$ 6,500	
194.	McCormack	3.60	12.01	Inner window	Install a second window inside of the existing single pane windows	50,000 SF of window area @ $35/SF	50,000	SF						$ 35.00	41%	$ 2,467,500	$ 49
195.	McCormack	3.60	12.01	Inner window	Install a second window inside of the existing single pane	50,000 SF of window area @ $35/SF	50,000	SF						$ 35.00	41%	$ 2,467,500	
196.	Lindemann			Engineering Cost by Design/Build Contractor		3% of "construction" total cost										$ 172,000	
197.	Lindemann	11.00		Training and Maintenance (include professional video tapping of training sessions)	SEE MCORMACK BUILDING												
198.	Lindemann	7.40 & 7.50		Fire protection system	Modifications at mechanical rooms to accommodate changes made		1	LS						$ 11,880.00	41%	$ 16,751	$ 16,751
199.	Lindemann	7.40		Fire protection system	Relocate sprinkler heads	Assumed 4 heads per mechanical room	8	EA			6.00	$ 85.0	$ 200.00	$ 710.00	41%	$ 8,009	
200.	Lindemann	7.40		Fire protection system	Piping to relocate sprinkler heads	Assumed 20 feet per mechanical room	8	EA			7.00	$ 85.0	$ 180.00	$ 775.00	41%	$ 8,742	
202.	Lindemann			Replace air handling units	Like-kind replacement of air handling units	18 AHUs (between 1000 - 20,000 CFM)	18	EA						$ 68,000.00	41%	$ 1,725,840	$ 95,880
203.	Lindemann	5.4.3.c		Replace air handling unit AHU-1			1	EA				$ 85.0		$ 124,880.00	41%	$ 176,081	
204.	Lindemann	5.4.3.c		Replace air handling unit AHU-2			1	EA				$ 85.0		$ 143,600.00	41%	$ 202,476	
205.	Lindemann	5.4.3.c		Replace air handling unit AHU-3			1	EA				$ 85.0		$ 14,280.00	41%	$ 20,135	
206.	Lindemann	5.4.3.c		Replace air handling unit AHU-4			1	EA				$ 85.0		$ 110,960.00	41%	$ 156,454	
207.	Lindemann	5.4.3.c		Replace air handling unit AHU-5			1	EA				$ 85.0		$ 65,600.00	41%	$ 92,496	
208.	Lindemann	5.4.3.c		Replace air handling unit AHU-6			1	EA				$ 85.0		$ 80,640.00	41%	$ 113,702	
209.	Lindemann	5.4.3.c		Replace air handling unit AHU-7			1	EA				$ 85.0		$ 21,040.00	41%	$ 29,666	
210.	Lindemann	5.4.3.c		Replace air handling unit AHU-8			1	EA				$ 85.0		$ 72,800.00	41%	$ 102,648	
211.	Lindemann	5.4.3.c		Replace air handling unit AHU-9			1	EA				$ 85.0		$ 13,520.00	41%	$ 19,063	
212.	Lindemann	5.4.3.c		Replace air handling unit AHU-10			1	EA				$ 85.0		$ 52,920.00	41%	$ 74,617	
213.	Lindemann	5.4.3.c		Replace air handling unit AHU-11			1	EA				$ 85.0		$ 103,240.00	41%	$ 145,568	
214.	Lindemann	5.4.3.c		Replace air handling unit AHU-12			1	EA				$ 85.0		$ 145,280.00	41%	$ 204,845	
215.	Lindemann	5.4.3.c		Replace air handling unit AHU-13			1	EA				$ 85.0		$ 62,720.00	41%	$ 88,435	
216.	Lindemann	5.4.3.c		Replace air handling unit AHU-14			1	EA				$ 85.0		$ 11,000.00	41%	$ 15,510	
217.	Lindemann	5.4.3.c		Replace air handling unit AHU-15			1	EA				$ 85.0		$ 60,680.00	41%	$ 85,559	
218.	Lindemann	5.4.3.c		Replace air handling unit AHU-16			1	EA				$ 85.0		$ 8,000.00	41%	$ 11,280	
219.	Lindemann	5.4.3.c		Replace air handling unit AHU-17			1	EA				$ 85.0		$ 16,000.00	41%	$ 22,560	
220.	Lindemann	5.4.3.c		Replace air handling unit AHU-18			1	EA				$ 85.0		$ 40,000.00	41%	$ 56,400	
221.	Lindemann	4.4.A		Replace air handling units	New house keeping pad for AHU		18	EA			32.00	$ 85.0	$ 600.00	$ 3,320.00	41%	$ 84,262	
223.	Lindemann		15.02	Condenser water heat recovery	Use condenser water to preheat domestic hot water, or use condenser water as input to second chiller to generate hot water	Heat exchanger, pumps, piping, controls	1	LS						$ 24,236.25	41%	$ 34,173	$ 34,173
224.	Lindemann	5.4.3.h	15.02	Condenser water heat recovery	ASSUMED QUANTITY	Pumps (1 duplex sets/system per Mech Engr)	2	EA			1.00	$ 85.0	$ 465.00	$ 550.00	41%	$ 1,551	
225.	Lindemann	5.4.3.h	15.02	Condenser water heat recovery	ASSUMED QUANTITY (250' EA per Mech Engr - email dated 10/26/2012)	Piping	500	LF			0.19	$ 85.0	$ 5.70	$ 21.85	41%	$ 15,404	
226.	Lindemann	5.4.3.h		Condenser water heat recovery	Heat exchanger	1 per system per Mech Engr; ASSUMED EACH 7.5 gpm	1	EA			4.00	$ 85.0	$ 1,800.00	$ 2,140.00	41%	$ 3,017	
227.	Lindemann	not in BOD		Condenser water heat recovery	Piping Insulation		500	LF			0.07	$ 85.0	$ 1.00	$ 7.21	41%	$ 5,080	
228.	Lindemann	not in BOD		Condenser water heat recovery	Equipment insulation	Assume 30 SF Each	30	SF	1	30	0.73	$ 85.0	$ 3.83	$ 65.63	41%	$ 2,776	
229.	Lindemann	5.4.3.h	15.02	Condenser water heat recovery	ASSUMED QUANTITY	Controls	2	EA			16.00	$ 85.0	$ 640.00	$ 2,000.00	41%	$ 5,640	
230.	Lindemann	4.4.C		Condenser water heat recovery	House keeping pads for heat exchanger		1	EA					$ 500.00	$ 500.00	41%	$ 705	
231.	Lindemann		17.02	Synchronous fan drives	Use cogged fan belts and pulleys to reduce power transmission loss	17 - Remove existing pulleys, belts, sheaves, and provide new	17	EA						$ 980.00	41%	$ 23,491	$ 1,382
232.	Lindemann	5.4.3.c and 5.4.3.d	17.02	Synchronous fan drives	NEW PULLEYS, BELTS AND SHEAVES (AHU come with appropriate pulleys, belts and sheaves)		17	EA			8.00	$ 85.0	$ 300.00	$ 980.00	41%	$ 23,491	
233.	Lindemann		3.01	Replace fan coil unit motors	Install more-efficient brushless motors in fan coil units	450 FCUs	450	EA						$ 448.05	41%	$ 284,288	
234.	Lindemann	5.4.3.f	3.01	Replace fan coil unit motors	Replace 277v motors with 1/10 HP 120v motors	450 motors per Mech Engr	450	EA			2.33	$ 85.0	$ 250.00	$ 448.05	41%	$ 284,288	

Line No.	Building	BOD #	ECM #	ECM Description	Summary of ECM	Estimated # of Instances / Description of Work	QTY	UNIT			MAN-HOUR RATE	LABOR RATE	MATERIAL Unit Price	DIRECT UNIT COST	CONTRACTOR MARK-UP & CONTINGENCY	TOTAL COST	TOTAL UNIT PRICE
235.	Lindemann		23.00	Replace pumps with higher-efficiency model	Replace chilled water, heating hot water and condenser water pumps with more efficient model	11 (including motor)	11	EA						$ 14,900.00	41%	$ 231,099	$ 21,009
236.	Lindemann	5.4.3.l	23.00	Replace pumps with higher-efficiency model	Replace pumps; HWP-1, HWP-2	60 HP	2	EA			36.00	$ 85.0	$ 22,025.00	$ 25,085.00	41%	$ 70,740	
237.	Lindemann	5.4.3.l	23.00	Replace pumps with higher-efficiency model	Replace pumps; CHWP-1, CHWP-2, CHWP-3	40 HP	3	EA			54.00	$ 85.0	$ 15,344.00	$ 19,934.00	41%	$ 84,321	
238.	Lindemann	5.4.3.l	23.00	Replace pumps with higher-efficiency model	Replace pumps; CWP-1, CWP-2	20 HP	2	EA			24.00	$ 85.0	$ 8,500.00	$ 10,540.00	41%	$ 29,723	
239.	Lindemann	5.4.3.l	23.00	Replace pumps with higher-efficiency model	Replace pumps; PCHWP-1, PCHWP-2	15 HP	2	EA			18.00	$ 85.0	$ 8,000.00	$ 9,530.00	41%	$ 26,875	
240.	Lindemann	5.4.3.l	23.00	Replace pumps with higher-efficiency model	Replace pumps; HWP-3, HWP-4	10 HP	2	EA			16.00	$ 85.0	$ 5,500.00	$ 6,860.00	41%	$ 19,345	
241.	Lindemann		10.00	Insulate pumps	Insulate hot water and chilled water pumps to reduce heat loss to surrounding room	11 pumps - 2" fiberglass insulation	1	LS						$ 23,100.00	41%	$ 32,571	$ 32,571
242.	Lindemann	5.4.3.m	10.00	Insulate pumps	60 HP	2 EACH	64	SF	2	32	0.73	$ 85.0	$ 3.83	$ 65.63	41%	$ 5,922	
243.	Lindemann	5.4.3.m	10.00	Insulate pumps	40 HP	3 EACH	96	SF	3	32	0.73	$ 85.0	$ 3.83	$ 65.63	41%	$ 8,883	
244.	Lindemann	5.4.3.m	10.00	Insulate pumps	20 HP	2 EACH	64	SF	2	32	0.73	$ 85.0	$ 3.83	$ 65.63	41%	$ 5,922	
245.	Lindemann	5.4.3.m	10.00	Insulate pumps	15 HP	2 EACH	64	SF	2	32	0.73	$ 85.0	$ 3.83	$ 65.63	41%	$ 5,922	
246.	Lindemann	5.4.3.m	10.00	Insulate pumps	10 HP	2 EACH	64	SF	2	32	0.73	$ 85.0	$ 3.83	$ 65.63	41%	$ 5,922	
247.	Lindemann		10.00	Insulate domestic hot water heaters	Insulate domestic hot water heat exchangers to reduce heat loss to surrounding room	3 - Plate and frame DWH, 2" fiberglass insulation	3	EA						$ 900.00	41%	$ 3,807	$ 1,269
248.	Lindemann	5.4.3.m	10.00	Insulate domestic hot water heaters	INSULATE DOMESTIC HOT WATER HEAT EXCHANGERS	3 EACH	3	EA				$ 85.0		$ 900.00	41%	$ 3,807	
249.	Lindemann		3.01	Replace fans & motors	Replace fans with more efficient model motors	17 EACH	17	EA						$ 8,360.00	41%	$ 200,389	$ 11,788
250.	Lindemann	5.4.3.d	3.01	Replace fan & motor	5 HP motors (RF-1, RF-9, RF-14), 16000 - 22100 cfm	3 EACH	3	EA			16.50	$ 85.0	$ 9.00	$ 1,411.50	41%	$ 5,971	
251.	Lindemann	5.4.3.d	3.01	Replace fan & motor	5 HP motors (RF-8), 12906 cfm	1 EACH	1	EA			25.50	$ 85.0	$ 13,330.00	$ 15,497.50	41%	$ 21,851	
252.	Lindemann	5.4.3.d	3.01	Replace fan & motor	3 HP motors (RF-2, RF-6), 10100 - 13000 cfm	2 EACH	2	EA			25.00	$ 85.0	$ 12,550.00	$ 14,675.00	41%	$ 41,384	
253.	Lindemann	5.4.3.d	3.01	Replace fan & motor	3 HP motors (RF-5, RF-11, RF-15), 6000 - 9000 cfm	3 EACH	3	EA			23.50	$ 85.0	$ 8,650.00	$ 10,647.50	41%	$ 45,039	
254.	Lindemann	5.4.3.d	3.01	Replace fan & motor	2 HP motors (RF-4, RF-7, RF-17), 6000 - 9000 cfm	3 EACH	3	EA			20.75	$ 85.0	$ 7,060.00	$ 8,823.75	41%	$ 37,324	
255.	Lindemann	5.4.3.d	3.01	Replace fan & motor	1.5 HP motors (RF-10), 5470 cfm	1 EACH	1	EA			20.75	$ 85.0	$ 6,610.00	$ 8,373.75	41%	$ 11,807	
256.	Lindemann	5.4.3.d	3.01	Replace fan & motor	1 HP motors (RF-3, RF-13), 4000 - 4500 cfm	2 EACH	2	EA			20.75	$ 85.0	$ 6,130.00	$ 7,893.75	41%	$ 22,260	
257.	Lindemann	5.4.3.d	3.01	Replace fan & motor	3/4 HP motors (RF-12), 3250 cfm	1 EACH	1	EA			18.50	$ 85.0	$ 4,250.00	$ 5,822.50	41%	$ 8,210	
258.	Lindemann	5.4.3.d	3.01	Replace fan & motor	1/2 HP motors (RF-16), 1500 cfm	1 EACH	1	EA			17.50	$ 85.0	$ 3,200.00	$ 4,687.50	41%	$ 6,609	
259.	Lindemann		9.01	Chilled water distribution improvement	Replace 3-way cooling coil control valves with 2-way type, and install variable speed drives on secondary chilled water pumps	18 Valves	1	LS						$ 36,180.00	41%	$ 51,014	$ 51,014
260.	Lindemann	5.4.3.n	9.01	Chilled water distribution improvement	REPLACE CONTROL VALVES	18 EACH	18	EA			6.00	$ 85.0	$ 1,500.00	$ 2,010.00	41%	$ 51,014	
262.	Lindemann		17.00	Reduce duct leakage	Seal large ductwork in mechanical rooms with aerosol-sealant	50% of large ductwork on mech. Floors	4	EA						$ 640.00	41%	$ 3,610	$ 902
263.	Lindemann	5.4.3.q	17.00	Reduce duct leakage	SEAL LARGE DUCTWORK	ASSUMED 4 LOCATIONS	4	EA			4.00	$ 85.0	$ 300.00	$ 640.00	41%	$ 3,610	
266.	Lindemann		17.10	Demand control ventilation	Install carbon-dioxide sensors in conference rooms to reduce supply airflow when room is unoccupied	10 Conference Rooms	18	EA						$ 420.00	41%	$ 10,660	$ 592
268.	Lindemann	5.43.j		DCV/CO2 Sensors	Provide new CO2 sensors for each AHU in the return air duct		18	EA			2.00	$ 85.0	$ 250.00	$ 420.00	41%	$ 10,660	
269.	Lindemann		17.09	Reactivate economizers	Repair outside air and relief air dampers so that airside economizer cycle can be used		1	LS						$ 24,240.00	41%	$ 34,178	$ 34,178
270.	Lindemann	5.4.3.k	17.09	Reactivate economizers	REPAIR DAMPERS	18 AHUx2/EA = 36 EA	36	EA			2.00	$ 85.0	$ 50.00	$ 220.00	41%	$ 11,167	
271.	Lindemann	5.4.3.k	17.09	Reactivate economizers	REBALANCING	1 LUMP SUM	1	LS			80.00	$ 170.0	$ 2,720.00	$ 16,320.00	41%	$ 23,011	
276.	Lindemann		4.13	Optimized air handling unit start/stop	Start and stop air handling units based on predicted outside air and room air temperatures	30 hrs of run time/yr savings	1	LS						$ 600.00	41%	$ 846	
277.	Lindemann	not in BOD	4.13	Optimized air handling unit start/stop	PROGRAMMING	Controls	1	LS			4.00	$ 150.0		$ 600.00	41%	$ 846	
278.	Lindemann		4.01	Energy dashboard	Install energy dashboard to visualize building energy consumption and trending	Provide monitors, controls, wiring	1	LS						$ 4,485.00	41%	$ 6,324	$ 6,324
279.	Lindemann	5.4.3.p	4.01	Energy dashboard	ENERGY DASHBOARD - MONITORS	1 required per Mech Engr (ref. email dated 10-26-12)	1	EA			6.00	$ 85.0	$ 2,000.00	$ 2,510.00	41%	$ 3,539	

Line No.	Building	BOD #	ECM #	ECM Description	Summary of ECM	Estimated # of Instances / Description of Work	QTY	UNIT			MAN-HOUR RATE	LABOR RATE	MATERIAL Unit Price	DIRECT UNIT COST	CONTRACTOR MARK-UP & CONTINGENCY	TOTAL COST	TOTAL UNIT PRICE
280.	Lindemann	5.4.3.p	4.01	Energy dashboard	ENERGY DASHBOARD - CONDUIT & WIRE	For 1 monitor only per Mech Engr (ref. email dated 10-26-12); ASSUMED LF/EA (200')	200	LF			0.05	$ 85.0	$ 3.05	$ 6.88	41%	$ 1,939	
281.	Lindemann	5.4.3.p	4.01	Energy dashboard	ENERGY DASHBOARD - CONTROLS		1	LS			4.00	$ 85.0		$ 600.00	41%	$ 846	
282.	Lindemann			Building Automation System (BAS)			1	LS						$ 1,750,000.00	41%	$ 2,467,500	
283.	Lindemann	8.00		Building Automation System (BAS)	New BAS and all controls upgrades		350,000	SF					$ 5.00	$ 5.00	41%	$ 2,467,500	$ 7
284.	Lindemann		2.01	Lighting controls	Retrofit areas with automated controls (occupancy sensors, daylight harvesting (though this will include some ballast replacements)	See Description Below	1	LS						$ 280,245.94	41%	$ 395,147	$ 395,147
285.	Lindemann	9.9.3.b	2.01	Lighting controls	DAYLIGHT HARVESTING - PHOTOCELLS	PHOTOCELLS	232	EA			1.14	$ 85.0	$ 116.00	$ 213.16	41%	$ 69,727	
287.	Lindemann	9.9.3.a	2.01	Lighting controls	OCCUPANCY SENSORS - WALL SENSOR (PIR)	WALL SENSOR (PIR)	277	EA			1.14	$ 85.0	$ 116.00	$ 213.16	41%	$ 83,252	
288.	Lindemann	9.9.3.a	2.01	Lighting controls	OCCUPANCY SENSORS - SENSOR (DUAL TECH.)	SENSOR (DUAL TECH.)	253	EA			1.23	$ 85.0	$ 185.00	$ 289.64	41%	$ 103,321	
289.	Lindemann	9.9.3.a	2.01	Lighting controls	OCCUPANCY SENSORS - REMOTE POWER PACKS	REMOTE POWER PACKS	530	EA			0.80	$ 85.0	$ 38.50	$ 106.50	41%	$ 79,587	
290.	Lindemann	9.9.3.c		Lighting controls	Local controllers		398	EA			0.33	$ 85.0	$ 68.50	$ 96.81	41%	$ 54,325	
295.	Lindemann	9.11.1	2.01	Lighting controls	NEW CFL LAMPS - # OF LAMPS FOR (DOWNLIGHTS)	# OF LAMPS FOR (DOWNLIGHTS)	4	EA			0.15	$ 85.0	$ 12.00	$ 24.75	41%	$ 140	
297.	Lindemann	9.11.1	2.01	Lighting controls	PROGRAMMING	Controls	1	LS			40.00	$ 85.0		$ 3,400.00	41%	$ 4,794	
298.	Lindemann		11.01	Vending machine power reduction	Delamp vending machines and de-energize when area is unoccupied	9.00	9	EA						$ 150.00	41%	$ 1,904	
299.	Lindemann	section 09	11.01	Vending machine power reduction	Occupancy sensor based vending machine control is required	9 EACH	9	EA			1.00	$ 150.0		$ 150.00	41%	$ 1,904	
300.	Lindemann		5.06	Replace toilet fixtures	Replace valves at toilet fixtures (water closets, urinals, lavatories) with low flow type	20 Urinals (0.5 gpf) / 136 Toilets (1.28 gpf)	1	LS						$ 159,282.50	41%	$ 224,588	$ 224,588
301.	Lindemann	6.3.4.c	5.06	Replace toilet fixtures	URINALS (0.125 GPF)	20 EACH	20	EA			4.00	$ 85.0	$ 620.00	$ 960.00	41%	$ 27,072	
302.	Lindemann	6.3.4.a and 6.3.4.b	5.06	Replace toilet fixtures	TOILETS (1.28 GPF)	137 EACH	137	EA			4.50	$ 85.0	$ 640.00	$ 1,022.50	41%	$ 197,516	

MCCORMACK BUILDING	**$**	**23,287,780**
LINDEMANN BUILDING	**$**	**5,920,178**
TOTAL	**$**	**29,207,959**

KLING STUBBINS

Appendix C
Asbestos O&M Program Manual

COVINO ENVIRONMENTAL ASSOCIATES INC
300 Wildwood Avenue • Woburn, Massachusetts 01801
Tel 781.933.2555 • Fax 781.932.9402 • email mail@covinoinc.com

November 14, 2006

Mr. Vincent Cirigliano
Bureau of State Office Buildings
One Ashburton Place, Room #107
Boston, MA 02199

Ref: Covino Project 05.01462
Asbestos Operations and Maintenance Program Manual
Massachusetts Bureau of State Office Buildings

Dear Mr. Cirigliano:

As requested, enclosed please find ten copies of our final submittal of the Asbestos Operations & Maintenance (O&M) Program Manual for the six buildings managed by the Commonwealth of Massachusetts Bureau of State Office Buildings. Selected reference information on asbestos will be provided under separate cover.

Should you have any questions please call.

Sincerely,
COVINO ENVIRONMENTAL ASSOCIATES, INC.

Glenn N. Potter
Director, Building Sciences Group

Enclosures

ASBESTOS OPERATIONS & MAINTENANCE PROGRAM MANUAL

Commonwealth of Massachusetts
Bureau of State Office Buildings
One Ashburton Place
Boston, Massachusetts

Prepared for:

Bureau of State Office Buildings
Room 107
One Ashburton Place
Boston, Massachusetts

Prepared by:

Covino Environmental Associates, Inc.
300 Wildwood Avenue
Woburn, Massachusetts

Covino Project 05.01462

September 26, 2006

CONTENTS

SECTION **PAGE**

1.0 INTRODUCTION *1*

2.0 DEFINITIONS *2*

3.0 KEY ROLES *6*

4.0 ASBESTOS IDENTIFICATION *7*

5.0 SUMMARY OF KNOWN ACM *12*

6.0 COMMUNICATION *34*

7.0 QUALIFICATIONS AND TRAINING *43*

8.0 PLANNED RENOVATION & MAINTENANCE ACTIVITIES *45*

9.0 ABATEMENT ACTIVITIES *51*

10.0 EMERGENCY RESPONSE *64*

11.0 PERIODIC SURVEILLANCE *68*

12.0 RECORDKEEPING *98*

13.0 PERIODIC EVALUATION *101*

14.0 ASBESTOS REGULATIONS *102*

1.0 Introduction

The following Asbestos Operations & Maintenance (O&M) Program manual has been developed for the in-place management of asbestos-containing materials at six buildings managed by the Commonwealth of Massachusetts Bureau of State Office Buildings (BSB). The primary goal of this program is to provide guidelines and procedures so that asbestos can be pro-actively managed in accordance with federal, state, and local regulations while protecting the safety of building employees, tenant agencies, and visitors.

The purpose of the Operations and Maintenance (O&M) Program is to minimize the exposure of building occupants and visitors to airborne asbestos fibers. To accomplish this goal, the O&M Program contains information for cleaning already released asbestos fibers from surfaces if applicable, preventing future release by minimizing the disturbance of and damage to asbestos-containing materials, and monitoring asbestos conditions throughout the building. Important O&M Program elements include notifying building occupants of the locations of asbestos-containing materials, training maintenance staff in special procedures for cleaning and handling asbestos, establishing a process that ensures that asbestos-containing materials are not disturbed during facility repairs and renovations, and periodically re-inspecting areas containing asbestos. The O&M Program also establishes a recordkeeping system that documents employee training, O&M activities, abatement of asbestos, and the results of periodic reinspections. All records generated as a result of implementing this O&M Program, as well as this document, shall be kept by a designated Asbestos Program Manager.

2.0 Definitions

Accessible

Material is subject to disturbance by building occupants or custodial or maintenance personnel in the course of their normal activities.

Asbestos

Asbestiform varieties of chrysotile, crocidolite, amosite, anthophyllite, tremolite or actinolite.

ACM

Any material or product that contains 1% or more asbestos. Friable materials containing less than 10% asbestos must be verified using point counting methods or assumed to be ACM. Note that certain asbestos regulation apply to materials that contain less than 1% asbestos.

Asbestos Debris

ACM that can be identified by color, texture, or composition, or dust if the dust is determined by an accredited inspector to be ACM.

Assumed ACM

Any suspect ACM material that has not been adequately tested to determine if the material is ACM or non-ACM.

Bulk Sample

A sample of a suspect ACM material that is submitted to a qualified analytical laboratory for analysis to determine asbestos content. Bulk sample collection should be performed by Massachusetts Certified Asbestos Inspectors and analyzed by Massachusetts Certified Analytical Providers.

BSB

Commonwealth of Massachusetts, Bureau of State Office Buildings.

Building

Includes the State House, John W. McCormack, Charles F. Hurley and Erich Lindemann buildings located in Boston and the Registry buildings located in Pittsfield and Springfield.

Damaged Friable ACM

Friable miscellaneous ACM which has deteriorated or sustained physical injury such that the internal structure (cohesion) of the material is inadequate or which has delaminated such that it's bond to the substrate (adhesion) is inadequate or which for any other reason lacks fiber cohesion or adhesion qualities. Such damage or deterioration may be illustrated by the separation of ACM into layers; separation of ACM from the substrate; a flaking, blistering or crumbling of the ACM surface; water damage; significant or repeated water stains, scrapes, gouges, mars or other signs of physical injury to the ACM. Asbestos debris originating from the ACM in questions may also

indicate damage.

Encapsulation

Treatment of ACM with a material that surrounds or embeds asbestos fibers in an adhesive matrix to prevent the release of fibers, as the encapsulant creates a membrane over the surface (bridging encapsulant) or penetrates the material and binds its components together (penetrating encapsulant).

Enclosure

An airtight, impermeable, permanent barrier around ACM to prevent the release of asbestos fibers into the air.

Fiber Release Episode

Any uncontrolled or unintentional disturbance of ACM resulting in visible emissions.

Friable

A material that when dry, may be crumbled, pulverized or reduced to powder by hand pressure, and includes previously nonfriable material after such previously nonfriable material becomes damaged to the extent that when dry it may be crumbled, pulverized or reduced to powder by hand pressure.

Functional Space

A room, group of rooms or homogenous area (including crawlspaces or spaces between dropped ceilings and roof decks) designated by a person accredited to prepare management plans, design abatement projects, or conduct response actions.

High Efficiency Particulate Air (HEPA)

A filtering system capable of trapping and retaining at least 99.97 percent of all mono dispersed particles 0.3 um in diameter or larger.

Homogeneous Area

An area of surfacing material, thermal system insulation or miscellaneous material that is uniform in color and texture.

Miscellaneous Material

Interior building material on structural components, structural members or fixtures, such as floor tiles and ceiling tiles, and does not include surfacing materials or thermal system insulation.

Operations and Maintenance Program

A program of work practices to maintain friable ACM in good condition, ensure clean up of asbestos fibers previously released and prevent further release by minimizing and controlling friable ACM disturbance or damage.

2.0 Definitions

Potential Damage

Circumstances in which:

1. Friable ACM is in an area regularly used by building occupants, including maintenance personnel, in the course of their normal activities.
2. There are indications that there is a reasonable likelihood that the material, or its covering, will become damaged, deteriorated or delaminated due to changes in building use, occupancy, operations and maintenance practices or recurrent damage.

Potential Significant Damage

Circumstances in which:

1. Friable ACM is in an area regularly used by building occupants, including maintenance personnel, in the course of their normal activities.
2. There are indications that there is a reasonable likelihood that the material or its covering will become significantly damaged, deteriorated or delaminated due to changes in building use, occupancy, operations and maintenance practices or recurrent damage.
3. The material is subject to major or continuing disturbances due to factors such as vibration, air erosion or accessibility.

Preventive Measures

Actions taken to reduce disturbance of ACM or otherwise eliminate the reasonable likelihood of the materials becoming damaged or significantly damaged.

Removal

Taking out or stripping of substantially all ACM from a damaged area, functional space or a homogeneous area in a building.

Repair

Returning damaged ACM to an undamaged condition or to an intact state so as to prevent fiber release.

Response Action

A method, including removal, encapsulation, enclosure, repair or operation and maintenance that protect human health and the environment from friable ACM.

Routine Maintenance Area

An area, such as a boiler room or mechanical room where maintenance employees or contract workers regularly conduct maintenance activities but that is not normally frequented by building occupants.

Significantly Damaged Friable ACM

Means damaged friable ACM where the damage is extensive and severe.

2.0 Definitions

Surfacing Material

Material in a building that is sprayed on, troweled on or otherwise applied to surfaces such as an acoustical plaster on ceilings, fireproofing materials on structural members or other materials applied on surfaces for acoustical, fireproofing or other purposes.

Thermal System Insulation

Material in a building applied to pipes, fittings, boilers, breeching, tanks, ducts or other internal structural components to prevent heat loss or gain or water condensation or for other purposes.

Vibration

The periodic motion of friable ACM which may result in the release of asbestos fibers.

3.0 Key Roles

This section describes the key roles and responsibilities of firms and individuals involved in the management of asbestos located in buildings managed by BSB.

Program Manager

The Program Manager is an employee of BSB who has overall responsibility and authority for the implementation of the Asbestos O&M Program and for the day to day management of various asbestos-related activities at one or more BSB managed buildings. Asbestos-related activities include, but are not necessarily limited to asbestos abatement, renovation, maintenance or housekeeping work that may disturb ACM, asbestos inspection, and asbestos air monitoring. The Program Manager will assign qualified individuals to perform the various tasks required by the program. The person designated as the Program Manager shall be a person in a suitable position of authority to make decisions regarding asbestos issues on behalf of BSB and to authorize the funding and resources required to implement the program.

Asbestos Consultant

The Asbestos Consultant is an industrial hygiene consulting firm that provides asbestos inspection, laboratory analysis, project monitoring, abatement design, asbestos management, and training services.

Outside Contractor

An Outside Contractor is a company or individual other than an Asbestos Removal Contractor who is contracted either directly or indirectly by BSB.

Asbestos Removal Contractor

The Asbestos Removal Contractor is a Massachusetts DOS licensed asbestos contractor who is hired either directly or indirectly by BSB to perform asbestos abatement in a BSB managed building.

Tenant Agency

A Tenant Agency is any Massachusetts State agency who occupies space a BSB managed building.

Tenant Agency Representative

A Tenant Agency Representative is the person(s) designated by a Tenant Agency to be the contact person for the agency regarding asbestos matters.

Keeper of the Records:

The Keeper of the Records is an employee of BSB designated by the Program Manager who is primarily responsible for maintaining permanent files of all asbestos-related documents for the company.

4.0 Asbestos Identification

This section provides a general overview of some of the types of ACM that may be encountered in public office buildings. Note that not all of the examples of ACM included in this section are present in buildings managed by BSB and additional types of ACM not included may be present.

Asbestos was historically used in the manufacture of thousands of different types of materials that are found in buildings today. Even today, asbestos is used in the manufacture of some building materials, although on a much smaller extent than in years past. Identification of those building materials containing asbestos can be difficult because the visual appearance of a product containing asbestos may be identical to non-asbestos products.

ACM generally falls into one of three categories – surfacing materials, thermal system insulation, and miscellaneous materials. Some examples of ACM from each of the three categories are presented on the following pages. Some of these materials may be present in buildings managed by BSB, however, this list is not all-inclusive and additional types of ACM products may be present.

Examples of Thermal System Insulation (TSI)

Boilers – TSI associated with boilers (and furnaces) includes block and mudded insulation. The TSI is normally either visible or covered by a canvas covering, however, the TSI is sometimes enclosed by an outer metal jacket. Miscellaneous types of ACM such as gaskets, brick, flex connectors, etc. are sometimes present.

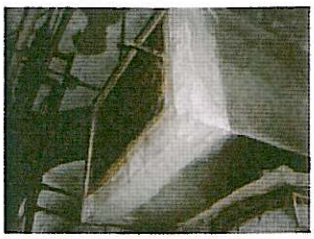

Breeching – TSI on boiler breeching

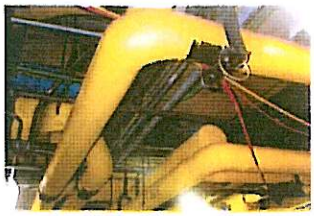

Piping Systems – ACM associated with various piping systems include TSI such as corrugated paper insulation, rolled paper insulation, pre-formed block pipe insulation, cloth wraps, coatings on fiberglass insulation, coatings on foam glass insulation, mudded insulation at fittings, etc. and may include miscellaneous types of ACM such as packings, gaskets, etc.

Examples of Thermal System Insulation (TSI)

Pipe Fitting Insulation – Mudded ACM pipe fitting insulation on valves and elbows of fiberglass insulated lines.

Hanger block insulation – block ACM insulation at pipe hanger on fiberglass insulated steam riser.

Examples of Miscellaneous ACM

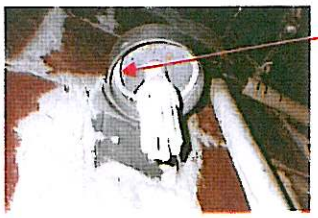

Asbestos gasket in light fixture

Asbestos gasket on electrical controls housing on piping

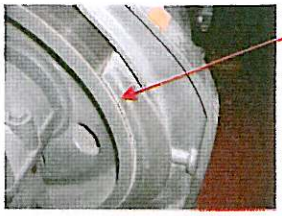

Asbestos brake pad on elevator machinery

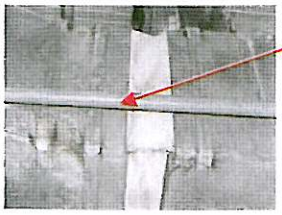

Asbestos flexible duct connector

Asbestos waterproofing on concrete retaining wall

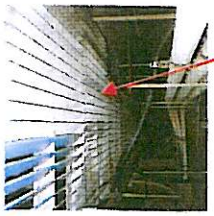

Asbestos louvers on cooling tower

Examples of Miscellaneous ACM

Asbestos floor tile

Asbestos duct sealant (red color)

Asbestos roofing materials

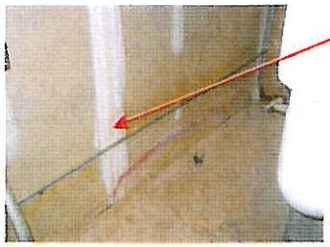

Asbestos joint compound materials on gypsum board wall

Examples of Surfacing ACM

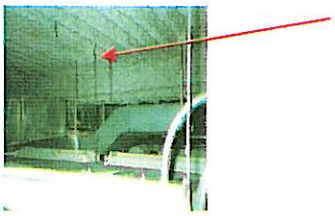

Asbestos fireproofing applied to deck and beams

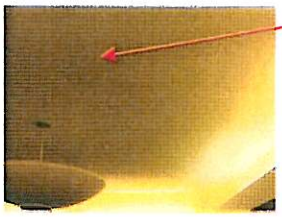

Acoustical asbestos ceiling material

5.0 Summary of Known ACM

Tables 5-1 through 5-6 of this section provide summaries of observed suspect ACMs and laboratory analysis results for the six buildings managed by the BSB. Information on the types of suspect ACM present in each building is based on the results of limited inspections of selected spaces in the buildings; therefore, additional ACMs may be present. Additional asbestos inspection and bulk sampling will be required prior to the start of all renovation or demolition activities. In some instances, the listed ACMs may have been removed from the building after the inspection date.

Table 5-1
Summary of Suspect Asbestos-Containing Materials
John W. McCormack Building
One Ashburton Place, Boston, Massachusetts
October 11 and 27, 2005

Material Description	Observed Locations	Analytical Results
Mudded fitting insulation and end seam sealant on fibrous glass pipe insulation	**Throughout building including mechanical areas, within mechanical chases, etc.**	**Positive** **10% Chrysotile Asbestos**
Spray-applied fire proofing	Throughout building on structural components	No Asbestos Detected
Joint compound on gypsum board[1]	**Throughout building on original gypsum board walls such as the common walls between the hallways and perimeter office suites, bathroom walls, etc.**	**Positive** **2% Chrysotile Asbestos**
Caulking on seams of air handling units	**Twenty-second floor, seventh floor, and level one mechanical rooms**	**Positive** **6% - 10% Chrysotile Asbestos**
Fire stop (various colors) at penetrations in walls and floors	**Throughout, including induction units located in perimeter offices, and in electrical and telephone services rooms**	**Positive** **6% - 12% Chrysotile Asbestos**

[1] The asbestos-containing joint compound has contaminated the gypsum board. Note that joint compound was not observed on the prefabricated gypsum wall panels used for interior office partitions.

Table 5-1
Summary of Suspect Asbestos-Containing Materials
John W. McCormack Building
One Ashburton Place, Boston, Massachusetts
October 11 and 27, 2005

Material Description	Observed Locations	Analytical Results
Skim coat plaster	Perimeter walls, column enclosures, stair towers and janitor's closets throughout; plaza level perimeter and interior walls	No Asbestos Detected
Base coat plaster	Perimeter walls, column enclosures, stair towers and janitor's closets throughout; plaza level perimeter and interior walls	No Asbestos Detected
12" Tan floor tile and associated mastic	**Various areas throughout building, exposed and beneath carpet**	**Positive 4% - 10% Chrysotile Asbestos**
12" Tan floor tile with streaks and associated mastic	**Various areas throughout building, exposed and beneath carpet**	**Positive 10% - 13% Chrysotile Asbestos**
2" Brown cove base	Various areas throughout building	No Asbestos Detected
Adhesive associated with 2" brown cove base	Various areas throughout building	No Asbestos Detected
2" Tan cove base	Various areas throughout building	No Asbestos Detected
Adhesive associated with 2" tan cove base	Various areas throughout building	No Asbestos Detected
3" Brown cove base	Various areas throughout building	No Asbestos Detected
Adhesive associated with 3" brown cove base	Various areas throughout building	No Asbestos Detected
3" Tan cove base	Various areas throughout building	No Asbestos Detected

Table 5-1
Summary of Suspect Asbestos-Containing Materials
John W. McCormack Building
One Ashburton Place, Boston, Massachusetts
October 11 and 27, 2005

Material Description	Observed Locations	Analytical Results
Adhesive associated with 3" tan cove base	Various areas throughout building	No Asbestos Detected
3" Green cove base	Various areas throughout building	No Asbestos Detected
Adhesive associated with 3" green cove base	Various areas throughout building	No Asbestos Detected
1½' x 5' Ceiling tiles	Throughout	No Asbestos Detected
Replacement 1½' x 5' Ceiling tiles	Various areas throughout	No Asbestos Detected
1' x 1' Ceiling tiles	Common areas throughout building	No Asbestos Detected
Caulking in seam at wall and floor union	Parking garage	No Asbestos Detected
Caulking in granite panel seems	Lobby, first floor	No Asbestos Detected
Gasket stored on table	Seventh floor mechanical room	No Asbestos Detected
Insulation on condensate tank	Level 3, parking garage	No Asbestos Detected
Duct seam sealant (various colors)	**Throughout including air handing units and associated ducts located in mechanical rooms, above suspended ceilings, and within mechanical chases, etc.**	**Positive 5% - 18% Chrysotile Asbestos**
Adhesive associated with internal fibrous glass duct insulation	Throughout including ducts located in mechanical rooms, above suspended ceilings, and within mechanical chases, etc.	No Asbestos Detected
Condensate line wrap within induction unit enclosures	Induction units located in perimeter offices	No Asbestos Detected

Table 5-1
Summary of Suspect Asbestos-Containing Materials
John W. McCormack Building
One Ashburton Place, Boston, Massachusetts
October 11 and 27, 2005

Material Description	Observed Locations	Analytical Results
Glazing compound associated with interior windows and doors	**Throughout**	**Positive** **6% - 12% Chrysotile Asbestos**
Caulking in seem concrete column and CMU block walls	Stair towers A and B	No Asbestos Detected
Coating on lower fibrous glass wall	Twenty-second floor mechanical room	No Asbestos Detected
Floor leveling compound	Conference rooms, twenty-first floor	No Asbestos Detected
Caulking between metal window frame and plaster	Throughout	No Asbestos Detected
Caulking within fire hose cabinets	Throughout	No Asbestos Detected
Fire hose material	Throughout	No Asbestos Detected
Paint on concrete beams	Stair towers A and B	No Asbestos Detected
Grout associated with ceramic tiles	Restrooms throughout	No Asbestos Detected
Mortar base associated with ceramic tiles	Restrooms throughout	No Asbestos Detected
Coating on metal ceiling grid edge	**Throughout building around perimeter of ceiling tile grid**	**Positive** **10% Chrysotile Asbestos**
Carpet adhesive	Throughout	No Asbestos Detected
Adhesive at corner guard	Various areas throughout	No Asbestos Detected

Table 5-1
Summary of Suspect Asbestos-Containing Materials
John W. McCormack Building
One Ashburton Place, Boston, Massachusetts
October 11 and 27, 2005

Material Description	Observed Locations	Analytical Results
Prefabricated wall panels	Various areas throughout	No Asbestos Detected
Lead shielding above ceiling tile grid	Various areas throughout	No Asbestos Detected
Vinyl sheet flooring	Daycare, first floor	No Asbestos Detected
Duct insulation associated with kitchen exhaust	Plaza level; sampling was limited to one location.	No Asbestos Detected
Skim coat over duct insulation associated with kitchen exhaust	Plaza level; sampling was limited to one location.	No Asbestos Detected
Prefabricated concrete panels	Penthouse mechanical room	No Asbestos Detected
Adhesive on sign	Various areas throughout	No Asbestos Detected
Adhesive behind decorative handrail detail	Elevators	No Asbestos Detected
Pipe thread dressing	Penthouse mechanical room	No Asbestos Detected
Caulking in expansion joint	**Air intake room, level 1 mechanical room**	**Positive** **5% Chrysotile Asbestos**

Table 5-2
Summary of Suspect Asbestos-Containing Materials
Charles F. Hurley Building
19 Staniford Street, Boston, Massachusetts
October 24 and 27, 2005 and April 19, 2006

Material Description	Material Description	Material Description
Duct seam sealant[2] (various colors)	**Throughout**	**Positive 8% Chrysotile Asbestos**
Caulking at door to filter compartment	Mechanical rooms 1, 2, and 3	No Asbestos Detected
Adhesive on cork vibration dampener	**Beneath air handling units, mechanical rooms 1, 2, and 3**	**Positive 13% - 20% Chrysotile Asbestos**
Paper beneath cork vibration dampener	**Beneath air handling units, mechanical rooms 1, 2, and 3**	**Positive 45% Chrysotile Asbestos**
Pipe insulation debris on floors	**Upper and lower steam tunnels (Entry restricted to authorized personnel only)**	**Positive 20% - 45% Chrysotile Asbestos**
Coating on wall	Storage room	No Asbestos Detected
Caulking at wall/floor union	Storage room	No Asbestos Detected
Window glazing compound	Throughout	No Asbestos Detected
Joint compound on gypsum board	Throughout	No Asbestos Detected
Gypsum board	Throughout	No Asbestos Detected

[2] Newer non-ACM duct seam sealant may be applied over older asbestos-containing duct seam sealant.

Table 5-2
Summary of Suspect Asbestos-Containing Materials
Charles F. Hurley Building
19 Staniford Street, Boston, Massachusetts
October 24 and 27, 2005 and April 19, 2006

Material Description	Material Description	Material Description
Floor tile associated with raised flooring panels (stored)	Storage room	No Asbestos Detected
Adhesive associated with floor tile on raised flooring panels (stored)	Storage room	No Asbestos Detected
2' x 2' Ceiling tiles with random perforations	Basement	No Asbestos Detected
2' x 2' Fissured ceiling tiles	Basement	No Asbestos Detected
Residual wood at top of column	Basement	No Asbestos Detected
Carpet adhesive (various colors)	Various areas throughout	No Asbestos Detected
2' x 2' Suspended ceiling tiles	Various areas throughout	No Asbestos Detected
2' x 2' Newer suspended ceiling tiles	Various areas throughout	No Asbestos Detected
Coating on rear of induction unit enclosures	**Throughout within perimeter induction units**	**Positive 10% - 15% Chrysotile Asbestos**
Caulk in joint between perimeter wall and concrete floor slab	**Throughout**	**Positive 12% Chrysotile Asbestos**
Caulk in joint between concrete floor slab and metal window frame	**Throughout**	**Positive 8% Chrysotile Asbestos**
Vapor barrier/mastic on perimeter walls	**Observed on the sixth floor and assumed present throughout within perimeter walls.**	**Positive 12% - 15% Chrysotile Asbestos**

Table 5-2
Summary of Suspect Asbestos-Containing Materials
Charles F. Hurley Building
19 Staniford Street, Boston, Massachusetts
October 24 and 27, 2005 and April 19, 2006

Material Description	Material Description	Material Description
Black mastic between column and metal wall panel	**Elevator lobby, fifth floor**	**Positive 4% - 15% Chrysotile Asbestos**
Mastic on top of concrete wall on wood	**At stick pin**	**Positive 12% Chrysotile Asbestos**
Skim coat plaster	Throughout	No Asbestos Detected
Base coat plaster	Throughout	No Asbestos Detected
Red fire stop	Various areas throughout	No Asbestos Detected
Adhesive associated with former phone booths	Sixth floor	No Asbestos Detected
Vapor barrier within wet walls	**Restrooms areas under ceramic floor and wall tiles**	**Positive 18% Chrysotile Asbestos**
Textured coating on suspended acoustical ceiling plaster	Various areas throughout	No Asbestos Detected
Lead shielding above suspended ceiling tiles	Second floor, Part I	No Asbestos Detected
12" Gray floor tiles	First floor, Part I	No Asbestos Detected
Adhesive associated with 12" gray floor tiles	**First floor, Part I**	**Positive 2% Chrysotile Asbestos**

Table 5-2
Summary of Suspect Asbestos-Containing Materials
Charles F. Hurley Building
19 Staniford Street, Boston, Massachusetts
October 24 and 27, 2005 and April 19, 2006

Material Description	Material Description	Material Description
Gasket at bolted pipe flange connection	Throughout on mechanical components	Positive 85% Chrysotile Asbestos
Mudded pipe fitting insulation, end seam sealant, and insulation at pipe hangers on fiberglass insulated lines	Throughout	Positive (based on previous bulk sampling results)
Pipe insulation	Observed in basement and tunnels, additional may be present in other building areas.	Positive (based on previous bulk sampling results)
Spray-applied fireproofing	All accessible ACM fireproofing has been removed and inaccessible areas have been enclosed within solid barriers	Positive (based on previous bulk sampling results)
9" floor tile and associated floor tile adhesive	Observed in various areas below carpet	Positive (based on previous bulk sampling results)

Table 5-2
Summary of Suspect Asbestos-Containing Materials
Charles F. Hurley Building
19 Staniford Street, Boston, Massachusetts
October 24 and 27, 2005 and April 19, 2006

Material Description	Material Description	Material Description
Gray insulation on water cooling tank (scheduled to be removed)	Mechanical Room #1, lower level	No Asbestos Detected
Brown window caulk	Garage	No Asbestos Detected
Expansion joint caulk	Garage	No Asbestos Detected
Caulk at wall panels	Garage	No Asbestos Detected
Gray duct seam sealant	Garage	No Asbestos Detected
Black mastic at deck drain pan	Garage	No Asbestos Detected
Emergency generator exhaust insulation	**Emergency Generator Room**	**Positive (based on previous Hygienetics report)**

Table 5-3
Summary of Suspect Asbestos-Containing Materials
Erich Lindemann Building
25 Staniford Street, Boston, Massachusetts
November 7-14, 2005 and April 20-21, 2006

Material Description	Observed Locations	Analytical Results
Caulking between concrete and metal window frame	**Throughout at perimeter of floors**	**Positive** **3% Chrysotile Asbestos**
Debris on floor surfaces	Various mechanical areas throughout building	No Asbestos Detected
Skim coat plaster	Throughout	No Asbestos Detected
Base coat plaster	Throughout	No Asbestos Detected
Grout associated with ceramic tiles	Various areas throughout	No Asbestos Detected
Mortar base associated with ceramic tiles	Various areas throughout	No Asbestos Detected
Textured ceiling material	Throughout	No Asbestos Detected
Brown cove base	Various areas throughout	No Asbestos Detected
Brown adhesive associated with brown cove base	Various areas throughout	No Asbestos Detected
9" White floor tiles with brown streaks	**Throughout, exposed and beneath carpet**	**Positive** **10% Chrysotile Asbestos**
Adhesive associated with 9" white floor tiles with brown streaks	Throughout, exposed and beneath carpet	No Asbestos Detected
Caulking at metal panels associated with air handling units	**Mechanical rooms**	**Positive** **10% Chrysotile Asbestos**
Foil-backed duct insulation and associated adhesive	Mechanical rooms	No Asbestos Detected

Table 5-3
Summary of Suspect Asbestos-Containing Materials
Erich Lindemann Building
25 Staniford Street, Boston, Massachusetts
November 7-14, 2005 and April 20-21, 2006

Material Description	Observed Locations	Analytical Results
Pipe thread sealant on sprinkler pipes	Throughout	No Asbestos Detected
Fire stop within induction unit	Throughout	No Asbestos Detected
Vapor barrier under fans	Mechanical rooms	No Asbestos Detected
Caulking at fresh air louvers	**Mechanical rooms**	**Positive** **2% Chrysotile Asbestos**
White block pipe insulation	**Maintenance area, ground floor and reportedly present on steam line in elevator shaft 5**	**Positive** **5% Chrysotile and** **40% Amosite Asbestos**
Stick pin adhesive associated with fibrous glass insulation panels	**Courthouse storage room (former pool)**	**Positive** **18% - 20% Chrysotile Asbestos**
Black mastic on concrete walls behind fibrous glass insulation panels	**Observed in courthouse storage room (former pool) and may be present in on foundation walls in other building areas**	**Positive** **18% Chrysotile Asbestos**
Spray-applied fire proofing	Loading dock area	No Asbestos Detected
1' x 1' Acoustical tile	Fifth floor	No Asbestos Detected
Adhesive associated with 1' x 1' acoustical tile	Fifth floor	No Asbestos Detected
Joint compound on gypsum board	Various areas throughout	No Asbestos Detected

Table 5-3
Summary of Suspect Asbestos-Containing Materials
Erich Lindemann Building
25 Staniford Street, Boston, Massachusetts
November 7-14, 2005 and April 20-21, 2006

Material Description	Observed Locations	Analytical Results
Caulking as expansion joint between ceramic wall tiles	Courthouse storage room (former pool)	No Asbestos Detected
2' x 2' Ceiling tiles	Fourth floor	No Asbestos Detected
Window glazing compound associated with window in door	Various areas throughout	No Asbestos Detected
Gaskets debris on floor	**Pool mechanical room**	**Positive** **65% Chrysotile Asbestos**
12" Blue floor tiles	Fourth floor	No Asbestos Detected
12" White floor tiles	Courthouse storage room (former pool)	No Asbestos Detected
Black adhesive associated with 12" white floor tile	Courthouse storage room (former pool)	No Asbestos Detected
12" White floor tiles with brown streaks	**Fifth floor**	**Positive** **9% Chrysotile Asbestos**
Black adhesive associated with 12" white floor tiles with brown streaks	Fifth floor	No Asbestos Detected
Butyl tape associated with windows	Gym	No Asbestos Detected
Gray cove base	Kitchen	No Asbestos Detected
Adhesive associated with gray cove base	Kitchen	No Asbestos Detected
Black coating on fiberglass debris	Pool mechanical room	No Asbestos Detected

Table 5-3
Summary of Suspect Asbestos-Containing Materials
Erich Lindemann Building
25 Staniford Street, Boston, Massachusetts
November 7-14, 2005 and April 20-21, 2006

Material Description	Observed Locations	Analytical Results
Stick pins associated with internal duct insulation	Observed in mechanical areas and may be present in other areas	Assumed Positive
Red duct seam sealant	Observed in mechanical rooms and on fifth floor. Assume present throughout building on duct seams	Positive (based on previous bulk sampling results)
Mudded pipe fitting insulation on fiberglass insulated lines	Throughout building	Positive (based on previous bulk sampling results)
Block insulation at pipe hangers	Throughout building	Positive (based on previous bulk sampling results)

Table 5-4
Summary of Suspect Asbestos-Containing Materials
Massachusetts State House
Boston, Massachusetts
December 14 - 28, 2005 and March 6 - 7, 2006

Material Description	Observed Locations	Analytical Results
Stick pin adhesive	**Attic above House of Representatives**	**Positive** **25% Chrysotile Asbestos**
Pipe insulation debris on floor	**Sub-basement, boiler room crawl space, coal pocket, and crawl space beneath room #55**	**Positive** **10% - 70% Chrysotile and 20% Amosite Asbestos**
Floor tile debris	**Crawl space beneath room #55**	**Positive** **10% Chrysotile Asbestos**
Adhesive associated with floor tile debris	Crawl space beneath room #551 rooms	No Asbestos Detected
Caulking on HVAC unit	Sub-basement, boiler room	No Asbestos Detected
Fireproofing on structural steel	Various areas throughout building	No Asbestos Detected
Textured coating on wall	Sub-basement, boiler room	No Asbestos Detected
Textured paint on steel columns and beams	Various areas throughout building	No Asbestos Detected
Adhesive on fiberglass insulation	Sub-basement, boiler room	No Asbestos Detected
Ceiling plaster	Sub-basement, boiler room	No Asbestos Detected
Textured coating on concrete	Electric room	No Asbestos Detected
Skim coat ceiling plaster	Sub-basement, old fan room	No Asbestos Detected

Table 5-4
Summary of Suspect Asbestos-Containing Materials
Massachusetts State House
Boston, Massachusetts
December 14 - 28, 2005 and March 6 - 7, 2006

Material Description	Observed Locations	Analytical Results
Base coat ceiling plaster	Sub-basement, old fan room	No Asbestos Detected
Adhesive on wall	Coal pocket	No Asbestos Detected
Brush motor	Sub-basement, storage room	No Asbestos Detected
Ceiling plaster	Various areas throughout building	No Asbestos Detected
Gypsum wall board	Various areas throughout building	No Asbestos Detected
Joint compound associated with gypsum wallboard	Various areas throughout building	No Asbestos Detected
Red duct seam sealant	Various areas throughout building	No Asbestos Detected
Wall plaster skim coat	Various areas throughout building	No Asbestos Detected
Wall plaster base coat	Various areas throughout building	No Asbestos Detected
Plaster patch at duct penetration	Various areas throughout building	No Asbestos Detected
Vibration damper cloth on air handling units	**Attic access through room #528**	**Positive 90% Chrysotile Asbestos**
Black coating on fiberglass duct insulation	**Attic above Senate Chambers**	**Positive 12% Chrysotile Asbestos**
Vibration damper cloth	**Attic above Senate Chambers**	**Positive 90% Chrysotile Asbestos**

Table 5-4
Summary of Suspect Asbestos-Containing Materials
Massachusetts State House
Boston, Massachusetts
December 14 - 28, 2005 and March 6 - 7, 2006

Material Description	Observed Locations	Analytical Results
Tan coating on fiberglass duct insulation	Attic above House of Representatives	No Asbestos Detected
Caulking on metal AHU panel	Fifth floor west side penthouse	No Asbestos Detected
9" green floor tile	**Various areas throughout building**	**Positive** **8% - 12% Chrysotile Asbestos**
Adhesive associated with 9" green floor tile	**Various areas throughout building**	**Assume Positive**
Ceiling plaster – base coat	House Chambers	No Asbestos Detected
Jute-backed flooring	Access to crawl space beneath House Chambers	No Asbestos Detected
Paper beneath jute-backed flooring	Access to crawl space beneath House Chambers	No Asbestos Detected
Black floor tile	**Various areas throughout building as a border tile**	**Positive** **18% Chrysotile Asbestos**
Adhesive associated with black floor tile	**Various areas throughout building**	**Assume Positive**
Glazing compound associated with glass floor panels	Fifth floor, library	No Asbestos Detected
Pink insulation	Various areas throughout building	No Asbestos Detected
Carpet adhesive	Various areas throughout building	No Asbestos Detected
Ceramic tile adhesive	Restrooms throughout	No Asbestos Detected

5.0 Summary of Known ACM

Table 5-4
Summary of Suspect Asbestos-Containing Materials
Massachusetts State House
Boston, Massachusetts
December 14 - 28, 2005 and March 6 - 7, 2006

Material Description	Observed Locations	Analytical Results
2' x 2' white ceiling tile (fissured)	Various areas throughout building	No Asbestos Detected
Vinyl cove base	Various areas throughout building	No Asbestos Detected
Adhesive associated with vinyl cove base	**Various areas throughout building**	**Positive NAD - 2% Chrysotile Asbestos**
12" gray floor tile	**Various areas throughout building**	**Positive 8% Chrysotile Asbestos**
Adhesive associated with 12" gray floor tile	**Various areas throughout building**	**Positive NAD – 10% Chrysotile Asbestos**
12" white floor tile	Various areas throughout building	No Asbestos Detected
Mastic associated with 12" white floor tile	Various areas throughout building	No Asbestos Detected
2' x 4' white ceiling tile (fissured)	Various areas throughout building	No Asbestos Detected
9" brown floor tile	**Various areas throughout building**	**Positive 10% Chrysotile Asbestos**
Adhesive associated with 9" brown floor tile	**Various areas throughout building**	**Positive 10% Chrysotile Asbestos**
2' x 2' gypsum ceiling tile	Various areas throughout building	No Asbestos Detected

5.0 Summary of Known ACM

Table 5-4
Summary of Suspect Asbestos-Containing Materials
Massachusetts State House
Boston, Massachusetts
December 14 - 28, 2005 and March 6 - 7, 2006

Material Description	Observed Locations	Analytical Results
White fire stop	East wing, fifth floor electric room	No Asbestos Detected
12" white ceiling tile (spline)	Various areas throughout building	No Asbestos Detected
9" gray floor tile	**Various areas throughout building**	**Positive 8% Chrysotile Asbestos**
Adhesive associated with 9" gray floor tile	**Various areas throughout building**	**Positive 10% Chrysotile Asbestos**
2' x 4' white ceiling tile (2' x 2' pattern)	Various areas throughout building	No Asbestos Detected
2' x 2' white ceiling tile (rough texture)	Various areas throughout building	No Asbestos Detected
2' x 2' white ceiling tile (smooth)	Various areas throughout building	No Asbestos Detected
2' x 2' white ceiling tile (fissured)	Various areas throughout building	No Asbestos Detected
Wall panel adhesive	**Observed in Room 213, East Wing where a section of paneling was removed. Assume present in other areas**	**Positive 13% Chrysotile Asbestos**

5.0 Summary of Known ACM

Table 5-5
Summary of Suspect Asbestos-Containing Materials
Pittsfield Registry Building
333 East Street, Pittsfield, Massachusetts
December 5, 2005

Material Description	Observed Locations	Analytical Results
Textured skim coat ceiling plaster	**Throughout basement**	**Positive 2% - 3% Chrysotile Asbestos**
Base coat ceiling plaster	**Throughout basement**	**Positive (assumed contaminated by skim coat plaster)**
9" Beige floor tiles	**Basement**	**Positive 10% - 12% Chrysotile Asbestos**
Adhesive associated with 9" beige floor tiles	Basement	No Asbestos Detected
Pipe insulation	**Throughout building**	**Positive 35% Chrysotile Asbestos**
Mudded pipe fitting insulation	**Throughout building**	**Assumed Positive**
Black paper above 12" ceiling tiles	First and second floor	No Asbestos Detected
Joint compound on gypsum board	Throughout	No Asbestos Detected
Gypsum board	Throughout	No Asbestos Detected
2' x 4' Ceiling tiles	Various areas throughout	No Asbestos Detected
Brown floor tiles below carpet	**Various areas throughout building**	**Positive 10% Chrysotile Asbestos**

5.0 Summary of Known ACM

Table 5-5
Summary of Suspect Asbestos-Containing Materials
Pittsfield Registry Building
333 East Street, Pittsfield, Massachusetts
December 5, 2005

Material Description	Observed Locations	Analytical Results
Adhesive associated with brown floor tiles beneath carpet	First floor	No Asbestos Detected
12" white floor tile with black streak floor tiles	First floor	No Asbestos Detected
Adhesive associated with 12" white floor tile with black streak floor tiles	**First floor**	**Positive 2% Chrysotile Asbestos**
Smooth skim coat plaster	Throughout building	No Asbestos Detected
Base coat plaster	Throughout building	No Asbestos Detected
12" beige floor tile	Various areas throughout building	No Asbestos Detected
Adhesive associated with 12" beige floor tiles	**Various areas throughout building**	**Positive 8% Chrysotile Asbestos**
Boiler exhaust duct insulation	Basement	No Asbestos Detected
Red duct seam sealant	Various areas throughout building	No Asbestos Detected
Cove base adhesive	**Throughout building**	**Positive 2% Chrysotile Asbestos**
Black paper above first floor ceiling tiles	First floor	No Asbestos Detected

Table 5-6
Summary of Suspect Asbestos-Containing Materials
Springfield Registry
165 Liberty Street, Springfield, Massachusetts
November 21, 2005

Material Description	Observed Locations	Analytical Results
Joint compound on gypsum board	**Various areas, first and second floors**	**Positive 2% Chrysotile Asbestos**
Skim coat on concrete columns	Various areas throughout first floor	No Asbestos Detected
Yellow carpet adhesive	Second floor	No Asbestos Detected
Base molding	First and second floors	No Asbestos Detected
Base molding (various colors) and associated adhesive	**First and second floors**	**Positive 2% Tremolite Asbestos**
Mudded fittings on fibrous glass pipe insulation	Various areas, first and second floors	No Asbestos Detected
2' x 4' ceiling tiles	Various areas, first and second floors	No Asbestos Detected
1' x 1' wall tiles	Second floor	No Asbestos Detected
Adhesive associated with 1' x 1' wall tiles	Second floor	No Asbestos Detected
Black window sills	**Various areas, first and second floors**	**Positive 12% Chrysotile Asbestos**
Cement board	**Stairwells**	**Positive 38% Chrysotile Asbestos**
9" Floor tiles (various colors and patterns) and associated adhesive	**Various areas, first and second floors**	**Positive 5% - 12% Chrysotile Asbestos**

6.0 Communication

6.1. Purpose

1. Effective communication between BSB employees, contractors, vendors and tenants will ensure that:

   a) All regulatory requirements are met.

   b) All work will be performed in accordance with the Asbestos O&M Program.

   c) Persons lacking appropriate training are prevented from disturbing asbestos-containing materials.

   d) Misunderstandings will be prevented.

6.2. Communication with Building Tenants

1. Communication between the asbestos program manager, and building tenants shall be documented to file.

2. The Asbestos Program Manager will inform building tenants that the Asbestos O&M Program Manual is available for their review. An example notification letter is provided in this section (Form 6-1).

3. When a copy of the written Asbestos O&M Program Manual is provided to a tenant, Section 5 may be amended to include only information that is specific to the tenant's leased space(s).

4. The Asbestos Program Manager will respond to building tenants' questions concerning the program.

6.3. Outside Contractor/Vendor Communication

1. All contractors and vendors must be notified of the presence and locations of ACM or Assumed ACM in the areas where they will be working. They will also be notified that any work that may disturb ACM or assumed ACM must be performed in accordance with the specific requirements of the O&M Program. An example contractor notification letter is provided in this section (Form 6-2).

2. When a copy of the written Asbestos O&M Program Manual is provided to an outside contractor or vendor, Section 5 may be amended to include only information that is specific to the building(s) where the work will be performed.

3. Before a contractor or vendor may begin work, receipt of the letter of notification should be signed by a responsible person of the contractor firm and returned to the Asbestos Program Manager. The contractor should certify that all employees have received the proper asbestos training for the work activities that they will perform, as outlined in Section 7, Qualifications and Training.

4. If a contractor or vendor encounters any suspect ACM or assumed ACM, or if any planned activity may potentially disturb ACM or assumed ACM then the contractor or vendor must notify the Asbestos Program Manager. The Asbestos Program Manager shall arrange for all necessary asbestos testing and abatement services.

6.4. Employee Communication

1. The Asbestos Program Manager will notify all BSB employees that perform work activities in buildings on the site where accessible asbestos is present of the presence of asbestos in areas where they work through a written notification. An example employee notification letter is provided in this section (Form 6-3).

2. The Asbestos Program Manager shall review all BSB Work Order Tickets for maintenance and renovation activities that will be performed by BSB employees in areas of the building where ACM is present. The Asbestos Program Manager shall determine if the maintenance activity may disturb ACM. All maintenance activities that may disturb ACM will be performed by an Asbestos Contractor. An example permit form is provided as Form 6-5.

6.5. Warning Labels and Signs

1. Regulations require employers to use asbestos warning labels and warning signs to notify workers of the presence of previously installed ACM and presumed ACM in routine maintenance areas. The purpose of the warning labels and warning signs is to make workers aware of the materials so that they do not inadvertently disturb the materials. The Asbestos Program Manager shall determine the appropriate types and locations of warning labels and warning signs to be posted in the building. Note that building maintenance and custodial staff should be warned that even non-labeled materials could contain asbestos.

2. Posted warning signs are required to demarcate a regulated area during asbestos abatement activities. These signs will be posted at a distance from the regulated area so that persons that do not have appropriate asbestos training and protective equipment can

read the signs and not enter the regulated work areas.

Signs will be posted immediately before work begins by the Asbestos Removal Contractor and will be removed after the work is completed. The signs will read as follows:

DANGER
ASBESTOS
CANCER AND LUNG DISEASE HAZARD
AUTHORIZED PERSONNEL ONLY
RESPIRATORS AND PROTECTIVE CLOTHING
ARE REQUIRED IN THIS AREA

3. Warning labels will be affixed to all asbestos waste containers by the Asbestos Removal Contractor before the waste containers are removed from the regulated work areas. The labels will read as follows:

DANGER
CONTAINS ASBESTOS FIBERS
AVOID CREATING DUST
CANCER AND LUNG DISEASE HAZARD
(DO NOT BREATH ASBESTOS FIBERS)

4. US EPA Generator labels will be attached to all asbestos waste containers before the waste containers are removed from the regulated area and will read as follows:

GENERATOR: *Commonwealth of Massachusetts*
WASTE GENERATION LOCATION: Building Address
CONTRACTOR (*Name of Abatement Contractor*)
ASBESTOS CONTRACTOR LICENSE (AC#####)
ASBESTOS DISPOSAL FACILITY (_____)

6.6. Emergency Contacts and Telephone Numbers

1. Emergency contact names and telephone numbers will be maintained and distributed by the Asbestos Program Manager to the following persons:

   a) The Building Manager
   b) All contractors/vendors who conduct any activities that may disturb ACM or

assumed ACM.

2. An example emergency contact list is provided in this section (Form 6-4).

Form 6 -1
Example Building Tenant Notification

Date
Address

Dear Agency Representative:

This letter serves as notice that BSB is in the process of implementing an Asbestos Operations & Maintenance Program for _____. The Asbestos Operations and Maintenance Program Manual is available for your review in the *building management office*. The program covers the management of asbestos-containing materials that are present in the building, including materials located in tenant areas, common areas, and in mechanical/maintenance areas.

Your cooperation is required for successful implementation of the Asbestos Operations & Maintenance Program. You must notify the BSB's asbestos program manager prior to performing any activities in the building that may result in the disturbance of asbestos-containing materials or assumed asbestos-containing materials. These activities may include, but are not necessarily limited to, the following:

- Replacement of flooring finishes (carpet, floor tile, linoleum, etc.)
- Removal or replacement of wall, column, or ceilings finishes
- Any renovation or demolition activities
- Repairs or replacement of HVAC system components
- Work in above-ceiling areas and in mechanical or electrical shafts

Please contact us if you have any questions.

Sincerely yours,

Form 6-2
Example Contractor/Vendor Notification Form

Date
Address

Dear Contractor / Vendor:

This letter serves as notice that BSB is in the process of implementing an Asbestos Operations & Maintenance Program for _____. The program covers the management of asbestos-containing materials that are present in the building, including materials located in tenant areas, common areas, and in mechanical/maintenance areas.

All work activities that might contact or disturb asbestos-containing materials, presumed asbestos-containing materials or other suspect asbestos-containing materials must be performed in accordance with the Asbestos Operations & Maintenance Program. Please review the Asbestos Operation & Maintenance Program Manual, which is available for your review. The return of one signed copy of this letter confirms your receipt of the above referenced information.

Please contact me if you have any questions.

Sincerely yours,

RECEIPT ACKNOWLEDGED BY (NAME): _____

SIGNATURE: _____

TITLE: _____

COMPANY: _____

Form 6-3
Employee Notification Form

Date

To: All Employees

Reference: Asbestos Operations & Maintenance Program

This letter serves as notice that BSB is in the process of implementing an Asbestos Operations & Maintenance Program for all BSB managed buildings. The program covers the management of asbestos-containing materials that are present in the buildings, including materials located in tenant agency areas, common areas, and in mechanical/maintenance areas.

Your cooperation is required for successful implementation of the Asbestos Operations and Maintenance Program. You must notify your supervisor prior to performing any activities that might result in the disturbance of asbestos-containing materials, presumed asbestos-containing materials, or otherwise suspect asbestos-containing materials. Please note that employees are prohibited from performing work activities that disturb asbestos.

The Asbestos Operation and Maintenance Program Manual is available for your review in the BSB office at One Ashburton Place. If you have any questions, please contact BSB's Asbestos Program Manager.

Sincerely yours,

Form 6-4
ASBESTOS EMERGENCY CONTACTS

CONTACT	CONTACT NAME/FIRM	WORK PHONE NUMBER	PAGER/CELL PHONE
Asbestos Program Manager			
Abatement Contractor			
Asbestos Testing Services			
Mass. DEP – Northeast Region Office			
Mass. DEP – Western Region Office			
MA DOS			
EPA Region 1			
OSHA			
Boston OEA			

Form 6-5

Example Permit for Performing Maintenance/Renovation Work in areas where ACM is present

Work Permit

1. BSB Work Order Ticket No._____

2. Exact location of area involved (include building name, room number, location within room, etc._____

3. Description of work involved_____

_____

_____

4. Starting Date_____ Anticipated Completion Date_____

5. Name and telephone number of proposed work supervisor_____

6. Name and telephone number of person applying for permit _____

7. If applicable, date contractor notified of ACM in proposed work area_____

8. *Approximate amount of asbestos present (linear feet, square feet), type and accessibility of material)_____

_____

9. *Recommended work practices to reduce the possibility of ACM disturbance_____

_____

_____

10. *Protective equipment to be used (respirator, coveralls, etc.)_____

_____

TO BE FILLED OUT BY ASBESTOS PROGRAM MANAGER

Accepted_____ Rejected_____

Date Authorized:_____

Printed Name_____ Signature_____

Asbestos Program Manager:

The designated Asbestos Program Manager shall be a BSB employee that has the authority and resources to fulfill the duties of position. The asbestos program manager will receive a minimum of eight (8) hours of asbestos training applicable to performing the duties required by this Asbestos O&M Program. Attending the "Asbestos Coordinator/LEA Designated Person" course offered IEE located in Wilmington, Massachusetts or any similar courses that is offered by a Massachusetts licensed training provider will be adequate. It may also be helpful for the Asbestos Program Manager to receive 40-hour EPA asbestos inspector/management planner and the 40-hour EPA asbestos contractor supervisor training.

Engineering, Maintenance, and Housekeeping Employees:

All employees, including employees of outside contractors and vendors that perform engineering, maintenance, or housekeeping activities in areas where ACM is present shall be provided with a minimum of two (2) hours of on-site asbestos awareness training. The content of the training will include, but not be limited to, the following elements:

1. Background information on asbestos, including its uses and forms.
2. Health effects of exposure to asbestos.
3. How to recognize and avoid disturbing ACM.
4. Recognition of ACM damage and deterioration.
5. Proper response to fiber-release episodes.
6. OSHA housekeeping requirements.
7. Basic requirements and availability of the Asbestos O&M Program manual.
8. Summary of known ACM and assumed ACM in engineering, maintenance, and housekeeping work areas.

General Contractor Employees:

All General Contractor employees, including employees of subcontractors that perform construction activities in areas where ACM or assumed ACM is present shall receive a minimum of two (2) hours of site-specific asbestos awareness training. The content of the training will include, but not be limited to, the following elements:

1. Background information on asbestos, including its uses and forms.
2. Health effects of exposure to asbestos.
3. Worker protection programs, including the use of respirators and other personal protective equipment.

4. How to recognize and avoid disturbing ACM.
5. Recognition of ACM damage and deterioration.
6. Proper response to fiber-release episodes.
7. OSHA housekeeping requirements.
8. Basic requirements and availability of the Asbestos O&M Program manual.
9. Summary of known ACM and assumed ACM in the General Contractor's work areas.

Refresher Training:

A refresher training course shall be required every year for persons who have completed initial asbestos awareness training and that continue to perform work activities requiring asbestos awareness training. The refresher training course shall be a minimum of one hour (1 hour) in duration and shall include the following information:

1. Update on O&M Program changes.
2. Review of the types and locations of known ACM and assumed ACM at the site.
3. Review of precautions to be taken to prevent disturbance of ACM.
4. Review of procedures to be taken in the event that damaged ACM is observed encountered.
5. Update on abatement activities completed during the previous year and planned future abatement activities.

The purpose of this section is to provide guidelines for some common building renovation and maintenance activities that have the potential to disturb ACM. Examples of some common building renovation and maintenance activities that may disturb ACM are provided, however, these examples are not inclusive of all building-related activities that may disturb ACM. Abatement activities performed to remove or repair ACM, which are discussed in Section 9.0, are not included in the section.

The Asbestos Program Manager shall review BSB Work Order Tickets and other proposed renovation and maintenance activities that will be performed in areas of the buildings where ACM is present. The Asbestos Program Manager shall determine if the maintenance activity may disturb ACM. All maintenance activities that may disturb ACM will be performed by a licensed Asbestos Contractor.

Table 8-1
Recommendations for Renovation and Maintenance Activities

Activity Description	Recommended Actions
Replacement of existing flooring finishes including floor tile, linoleum, hardwood flooring, carpet, etc.	1. Suspect ACM that may be disturbed during flooring removal include floor tile, linoleum, cove base, stair treads, mastics, flooring paper, adhesives, etc. Note that removal of non-asbestos floor coverings may disturb underlying ACM. 2. Review existing inspection and bulk sampling reports to determine if any suspect ACM that may be disturbed have previously been sampled and analyzed to determine asbestos content. 3. Perform asbestos sampling and analysis on any suspect ACM that have not previously been tested or where previous testing information is inconclusive. 4. Ensure that any work that may disturb ACM is performed by a licensed asbestos contractor in accordance with the Asbestos O&M Program.

Table 8-1
Recommendations for Renovation and Maintenance Activities

Activity Description	Recommended Actions
Interior painting	1. Suspect ACM that may be disturbed during interior painting activities include joint compound, gypsum board, caulk, plaster, acoustical finishes, etc. 2. Review existing inspection and bulk sampling reports to determine if any suspect ACM that may be disturbed have previously been sampled and analyzed to determine asbestos content. 3. Perform asbestos sampling and analysis on any suspect ACM that have not previously been tested or where previous testing information is inconclusive. 4. Ensure that any work that may disturb ACM is performed by a licensed asbestos contractor or Asbestos O&M Team Member (< 3 sq ft) in accordance with the Asbestos O&M Program.
Buffing/waxing resilient floor coverings	1. Resilient flooring materials that contain asbestos must be maintained in accordance with EPA and OSHA guidelines to prevent disturbance. 2. Review existing inspection and bulk sampling reports to determine if the resilient flooring materials have previously been sampled and analyzed to determine asbestos content. 3. Perform asbestos sampling and analysis on any suspect ACM that have not previously been tested or where previous testing information is inconclusive. 4. Ensure that maintenance personnel that are responsible for maintaining asbestos-containing resilient flooring materials are provided with asbestos awareness training on an annual basis. 5. Use low speed buffers (<300 rpm) 6. Maintain good wax coatings on flooring (2-3 coats recommended) 7. Use low abrasion buffing pads 8. Do not sand, drill, cut, or otherwise disturb asbestos-containing flooring.

Table 8-1
Recommendations for Renovation and Maintenance Activities

Activity Description	Recommended Actions
Door and/or lockset replacement	1. Suspect ACM that may be disturbed during door replacement and/or lockset removal include asbestos-containing linings in fire-rated doors, ACM caulk in door frames, and asbestos-cement materials. Note that door transoms may also contain ACM. 2. ACM linings are normally a white block material or corrugated paper. Do not remove locksets or drill, core, or cut into doors containing suspect linings. 3. Perform asbestos sampling and analysis on any suspect ACM that are observed within door linings. 4. Ensure that any work that may disturb ACM is performed by a licensed asbestos contractor in accordance with the Asbestos O&M Program.
Elevator maintenance	1. Suspect ACM that may be disturbed by elevator maintenance activities include asbestos-cement products, brake shoes, etc. 2. Review existing inspection and bulk sampling reports to determine if any suspect ACM that may be disturbed have previously been sampled and analyzed to determine asbestos content. 3. Perform asbestos sampling and analysis on any suspect ACM that have not previously been tested or where previous testing information is inconclusive. 4. Ensure that any work that may disturb ACM is performed by a licensed asbestos contractor in accordance with the Asbestos O&M Program.
Mechanical/plumbing repairs and upgrades	1. Suspect ACM that may be disturbed during mechanical/plumbing repair and upgrade projects may include pipe insulation, pipe fitting insulation, duct insulation, duct seam sealant, stick pin adhesives, gaskets, flex connectors, etc. 2. Review existing inspection and bulk sampling reports to determine if any suspect ACM materials that may be disturbed have previously been sampled and analyzed to determine asbestos content. 3. Perform asbestos sampling and analysis on any suspect ACM that have not previously been tested or where previous testing information is inconclusive. 4. Ensure that any work that may disturb ACM is performed by a licensed asbestos contractor in accordance with the Asbestos O&M Program.

Table 8-1
Recommendations for Renovation and Maintenance Activities

Activity Description	Recommended Actions
Window repairs/replacement	1. Suspect ACM that may be disturbed during window repair or replacement projects include window frame caulk, glazing compounds, waterproofing mastics, etc. 2. Review existing inspection and bulk sampling reports to determine if any suspect ACM that may be disturbed have previously been sampled and analyzed to determine asbestos content. 3. Perform asbestos sampling and analysis on any suspect ACM that have not previously been tested or where previous testing information is inconclusive. 4. Ensure that any work that may disturb ACM is performed by a licensed asbestos contractor in accordance with the Asbestos O&M Program.
Façade repairs and upgrades	1. Suspect ACM that may be disturbed during building façade repair and upgrade projects include expansion joint caulk, asbestos-cement siding, waterproofing mastics, paints, etc. 2. Review existing inspection and bulk sampling reports to determine if any suspect ACM that may be disturbed have previously been sampled and analyzed to determine asbestos content. 3. Perform asbestos sampling and analysis on any suspect ACM that have not previously been tested or where previous testing information is inconclusive. 4. Ensure that any work that may disturb ACM is performed by a licensed asbestos contractor in accordance with the Asbestos O&M Program.
Electrical upgrades	1. Suspect ACM that may be disturbed during electrical upgrade projects include high voltage wire insulation, cloth wraps, asbestos-cement sleeves, insulators, etc. Also, where work is performed in tight areas where friable ACM is present. 2. Review existing inspection and bulk sampling reports to determine if any suspect ACM that may be disturbed have previously been sampled and analyzed to determine asbestos content. 3. Perform asbestos sampling and analysis on any suspect ACM that have not previously been tested or where previous testing information is inconclusive. 4. Ensure that any work that may disturb ACM is performed by a licensed asbestos contractor in accordance with the Asbestos O&M Program.

Table 8-1
Recommendations for Renovation and Maintenance Activities

Activity Description	Recommended Actions
Roofing repairs/replacement	1. Suspect ACM that may be disturbed roofing repair or replacement projects include asphalt-based roofing materials, felts, asbestos-cement roofing products, flashing cements, caulk, etc. 2. Review existing inspection and bulk sampling reports to determine if any suspect ACM that may be disturbed have previously been sampled and analyzed to determine asbestos content. 3. Perform asbestos sampling and analysis on any suspect ACM that have not previously been tested or where previous testing information is inconclusive. 4. Ensure that any work that may disturb ACM is performed by a licensed asbestos contractor in accordance with the Asbestos O&M Program.
Demolition of buildings and structures	1. A comprehensive asbestos inspection must be performed prior to the start of any demolition activities. 2. All identified ACM must be removed prior to demolition by a licensed asbestos contractor in accordance with the Asbestos O&M Program. 3. If additional suspect ACM are encountered during building demolition activities, then precautions should be taken to prevent disturbance of the suspect ACM and bulk sampling and laboratory analysis should be performed to determine the materials asbestos content.
Selective demolition of wall partitions	1. Suspect ACM that may be disturbed during selective demolition of wall partitions include joint compound, gypsum board, wall plaster, moldings, molding adhesive, asbestos-cement panels, etc. 2. Review existing inspection and bulk sampling reports to determine if any suspect ACM that may be disturbed have previously been sampled and analyzed to determine asbestos content. 3. Perform asbestos sampling and analysis on any suspect ACM that have not previously been tested or where previous testing information is inconclusive. 4. Ensure that any work that may disturb ACM is performed by a licensed asbestos contractor in accordance with the Asbestos O&M Program.

Table 8-1
Recommendations for Renovation and Maintenance Activities

Activity Description	Recommended Actions
Selective demolition of acoustical ceilings	1. Suspect ACM that may be disturbed during selective demolition of acoustical ceilings include textured ceilings, joint compound, gypsum board, ceiling plaster, ceiling tile, glue daubs, asbestos-cement panels, etc. 2. Review existing inspection and bulk sampling reports to determine if any suspect ACM that may be disturbed have previously been sampled and analyzed to determine asbestos content. 3. Perform asbestos sampling and analysis on any suspect ACM that have not previously been tested or where previous testing information is inconclusive. 4. Ensure that any work that may disturb ACM is performed by a licensed asbestos contractor in accordance with the Asbestos O&M Program.

9.0 Abatement Activities

The purpose of this section is to provide general guidelines for asbestos abatement activities performed at buildings managed by BSB. Abatement activities include either the removal or repair of ACM and building activities that could disturb ACM and therefore require special asbestos engineering controls and work methods.

All building activities that may disturb ACM will be performed by an Asbestos Removal Contractor using certified asbestos workers and supervisors. No asbestos abatement activities will be performed by BSB employees.

The Asbestos Removal Contractor shall provide appropriate training, medical monitoring, and personal protective equipment for all workers and supervisors who perform abatement activities.

Pre-abatement Requirements:

1. Massachusetts DOS licensed Asbestos Contractors will be used for all asbestos abatement activities.
2. Tenants and Construction Managers shall notify the Asbestos Program Manager at least two weeks prior to the start of any planned asbestos abatement activities.
3. For emergency abatement projects, notify the Asbestos Program Manager as soon as feasible before the start of the emergency abatement activity.
4. The Asbestos Program Manager will notify each building owner employee that will be working in areas of the building that are located in or adjacent to the building area(s) where asbestos abatement activities will occur.
5. The Asbestos Program Manager will notify employers such as tenants, contractors, subcontractors, security contractors, etc., that have employees who will be working in areas of the building that are located in or adjacent to the building area(s) where asbestos abatement activities will occur.
6. The Asbestos Program Manager will verify that the asbestos contractor has provided all applicable asbestos notifications and has obtained all necessary permits to perform the planned activities.
7. The Asbestos Program Manager will arrange for asbestos project monitoring services to be provided by the building owner's Industrial Hygiene Consultant.
8. The Asbestos Consultant will review the proposed removal methods and engineering controls with the Asbestos Removal Contractor. The proposed locations for decontamination facilities, air filtration device exhaust, critical barriers, and temporary water and electrical service will also be reviewed.

9. For competitively bid projects and complex abatement projects, the Asbestos Program Manager will arrange for the Asbestos Consultant to prepare an asbestos abatement technical specification or a written work plan. Abatement specifications and work plans will be prepared by Massachusetts DOS licensed Asbestos Project Designers.

During Abatement:

The following are general requirements that must be met during all asbestos abatement activities. Additional requirements will vary depending on the actual types and quantities of ACM involved and the specific site conditions.

1. All work shall meet or exceed applicable asbestos regulations and industry standards.
2. All asbestos removal shall be performed using wet methods.
3. All critical barriers shall be inspected by the Asbestos Contractor during each work shift and maintained in good condition throughout the project.
4. No visible dust emissions shall be permitted during any asbestos abatement activities.
5. All air filtration devices shall be delivered to the site free of any asbestos contamination and shall be equipped with HEPA filters. All air filtration devices shall be exhausted to the outdoors.
6. All asbestos abatement activities shall be performed in regulated asbestos work areas. Regulated asbestos work areas shall be clearly delineated and all non-authorized persons shall be restricted from entering the work areas.
7. Airborne asbestos fiber levels inside regulated work areas shall be reduced to the lowest concentrations feasible using the appropriate work practices and engineering controls.
8. Airborne fiber levels outside of the regulated work areas shall not be permitted to exceed 0.010 fibers per cubic centimeter of air or established pre-abatement levels as measured by phase contrast microscopy and/or transmission electron microscopy. Asbestos removal contractors shall stop work immediately when notified of elevated airborne fiber concentrations measured outside of the work area and shall perform misting of the work area and decontamination as directed by the Asbestos Consultant.

9.0 Abatement Activities

Post Abatement Requirements:

1. A closeout package shall be forwarded to the Asbestos Program Manager by the Asbestos Contractor no later than 45 days after the completion of each asbestos abatement project. Closeout documents shall include, as a minimum, the following documentation:
   a. Asbestos Contractor's license issued by the Massachusetts DOS.
   b. Asbestos Abatement Worker and Supervisor certifications issued by the Massachusetts DOS for each asbestos worker and supervisor that is employed on the project.
   c. Asbestos worker and supervisor training certificates issued by an approved training provider for each asbestos worker and supervisor that is employed on the project.
   d. Respirator fit test records for workers employed on the project.
   e. Medical surveillance monitoring records for workers employed on the project.
   f. Asbestos exposure monitoring reports for workers employed on the project.
   g. Asbestos contractor's daily sign-in/out logs with printed and signed name and Massachusetts DOS certification number for each person who enters the asbestos work area, with the times of entry and exiting.
   h. Asbestos Notifications.
   i. Asbestos waste shipping records signed by the transporter and disposal facility operator for all waste generated by the project.
   j. Notice of violations, cease and desist orders, or other issued by a regulatory authority to the asbestos contractor on the project.
   k. Injury reports and incident reports prepared by the asbestos contractor relating to the project.

2. An asbestos air monitoring report shall be forwarded by the Asbestos Consultant to the Asbestos Program Manager no later than 45 days after the completion of each asbestos abatement project. Asbestos air monitoring reports shall include, as a minimum, the following documentation:
   a. Laboratory analysis results for all air sampling performed by the Project Monitor during the asbestos abatement activity.
   b. The Massachusetts DOS Laboratory Certification number(s) for all air sample analysis performed during the abatement project.
   c. Massachusetts DOS certification number(s) for each asbestos project monitor on site

during the abatement project.

d. Daily field logs prepared by the Asbestos Consultant's project monitor(s).

Joint Compound-Related Operations and Maintenance Activities:

Drilling Holes in Gypsum Board Walls and Ceilings Where ACM Joint Compound is Present as required for anchors, fasteners, cable penetrations, etc.:

1. The location(s) where holes are required should be marked.

2. The drilling work should be performed while the area is not occupied.

3. A regulated work area will be established that encompasses the drilling locations by posting asbestos warning signs and "danger" tape at each entrance to the regulated work area. Access to the regulated work area will be restricted to asbestos-trained persons.

4. Install red "asbestos danger" tape to create a regulated work area extending a minimum of twenty feet from the drilling area. Post asbestos danger signs at perimeter of regulated work area.

5. The HVAC system servicing the regulated area will be shut down during the work.

6. Minimum personnel protective equipment for workers performing the drilling shall be disposable full body coveralls with head and foot coverings, eye protection, and ½ face air purifying respirators equipped with P-100 filters, unless a greater level of protection is required.

7. Moveable objects should be removed from the area where the holes will be drilled.

8. Install a single layer of 6-mil thickness polyethylene sheeting "drop cloth" on the floor below each location where drilling is required. Where feasible the drop cloth shall extend a minimum of five feet from the drilling area. If the procedure will be performed from a lift or staging, then prepare floor of lift or staging by covering with a protective drop cloth.

9. Mist drilling location with a lockdown encapsulant using a hand operated spray bottle.

10. Use appropriate electric hand-held drill with shroud attachment provided by manufacturer. Attach HEPA vacuum to exhaust port of drill shroud.

11. Ensure that the HEPA vacuum utilized meets the minimum requirements of the shroud manufacturer.

12. Turn on HEPA vacuum prior to start of drilling.

13. Ensure that drill shroud has full contact with wall or ceiling surface throughout drilling operation. Workers should hold shroud against drilling surface for a sufficient period to

allow the dust to fully evacuate from the shroud before removing from wall or ceiling surface.

14. Clean drill and bit using wet wiping and HEPA vacuuming methods.

15. Utilize HEPA vacuum and/or wet cleaning cloths to remove any residual dust from drilling surface and all adjacent surfaces.

16. Install anchor, fastener, conduit, wire, etc.

17. Apply paint or a bridging encapsulant to seal exposed edges of drilled hole.

18. Remove floor poly sheeting by folding inwards.

19. Perform a final cleaning of work area using a HEPA vacuum.

20. Remove work area preparations and engineering controls.

21. All used poly, tapes, cleaning material and clothing that may contain ACM dust or debris shall be containerized and disposed of as asbestos-containing waste.

Installing Electrical and Tel/Com Boxes in Gypsum Board Walls and Ceilings Where ACM Joint Compound is Present:

1. The exact location(s) where openings for boxes are required should be marked in advance.

2. The work will be performed off-hours.

3. A regulated work area will be established that encompasses the opening locations by posting asbestos warning signs and "danger" tape at each entrance to the regulated work area. Access to the regulated work area will be restricted to asbestos-trained persons.

4. Install red "asbestos danger" tape to create a regulated work area extending a minimum of twenty feet from the location where the boxes will be installed area. Post asbestos danger signs at perimeter of regulated work area.

5. The HVAC system servicing the regulated area will be shut down during the work.

6. Minimum personnel protective equipment for workers performing the work shall be disposable full body coveralls with head and foot coverings, eye protection, and ½ face air purifying respirators equipped with P-100 filters, unless a greater level of protection is required.

7. Moveable objects should be removed from the area where the holes will be made.

8. Install a single layer of 6-mil thickness polyethylene sheeting "drop cloth" on the floor below each location where openings are required. Where feasible the drop cloth shall extend a minimum of five feet from the location where the boxes will be installed. If the procedure will be performed from a lift or staging, then prepare floor of lift or staging by covering with a protective drop cloth.

9. Mist opening location with a lockdown encapsulant using a hand operated spray bottle.

10. Carefully trace the outline of the required opening using a sharp utility knife. Peal away paper facing of gypsum board and any associated seam tape and joint compound and place directly in an asbestos disposal bag.

11. Mist exposed gypsum material with a lockdown encapsulant using a hand operated spray bottle.

12. Utilize drywall saw to remove the remaining gypsum board and trim as necessary with utility knife. A second worker should hold the nozzle of a HEPA vacuum directly below the point of cutting in order to capture any dust and debris released by the cutting activity.

13. Utilize HEPA vacuum and/or wet cleaning cloths to remove any residual dust from opening and all adjacent surfaces.

14. Apply paint or a bridging encapsulant to seal exposed edges of wall or ceiling opening.

15. Install electrical or tel/com box and associated wiring, cable, receptacles, switches, etc.

16. Remove floor poly sheeting by folding inwards.

17. Perform a final cleaning of work area using a HEPA vacuum.

18. Remove work area preparations and engineering controls.

19. All used poly, tapes, cleaning material and clothing shall be containerized and disposed as asbestos-containing material.

Repairing Minor Areas of Damage in Gypsum Board Walls and Ceilings Where ACM Joint Compound is Present:

1. The exact location(s) where repairs are required should be marked in advance and measurements made to confirm that the area to be repair is no greater than three square feet in size.

2. The work will be performed off-hours.

3. A regulated work area will be established that encompasses the repair locations by posting asbestos warning signs and "danger" tape at each entrance to the regulated work area. Access to the regulated work area will be restricted to asbestos-trained persons.

4. Install red "asbestos danger" tape to create a regulated work area extending a minimum of twenty feet from the location where the boxes will be installed area. Post asbestos danger signs at perimeter of regulated work area.

5. The HVAC system servicing the regulated area will be shut down during the work.

6. Minimum personnel protective equipment for workers performing the work shall be disposable full body coveralls with head and foot coverings, eye protection, and ½ face air purifying respirators equipped with P-100 filters, unless a greater level of protection is required.

7. Moveable objects should be removed from the area where the repairs will be made.

8. Install a single layer of 6-mil thickness polyethylene sheeting "drop cloth" on the floor below each location where repairs are required. Where feasible the drop cloth shall extend a minimum of five feet from the location where the repairs will be performed. If the procedure will be performed from a lift or staging, then prepare floor of lift or staging by covering with a protective drop cloth.

9. Mist repair location with a lockdown encapsulant using a hand operated spray bottle.

10. Remove any loose paint and joint compound and trim rough edges as necessary using a sharp utility knife. A second worker should hold the nozzle of a HEPA vacuum directly below the point of cutting in order to capture any dust and debris released by the cutting activity. Place removed materials directly in an asbestos disposal bag.

11. Install drywall patch material as necessary to fill any openings.

12. Utilize HEPA vacuum and/or wet cleaning cloths to remove any residual dust from opening and all adjacent surfaces.

13. Apply non-asbestos joint compound to repair area and smooth with putty knifes. Allow time for joint compound to begin to dry.

14. Smooth repair area using a dampened sponge and allow to dry.

15. If necessary, sand patch area and feather to existing surface using care not to disturb existing ACM joint compound. It may be helpful to tint the non-asbestos joint compound used for repairs in order to provide a visual indicator to cease sanding before the existing ACM joint compound is disturbed.

16. Apply paint using a roller or brush to complete repair.

17. Remove floor poly sheeting by folding inwards.

18. Perform a final cleaning of work area using a HEPA vacuum.

19. Remove work area preparations and engineering controls.

20. All used poly, tapes, cleaning material and clothing shall be containerized and disposed as asbestos-containing material.

Flooring Finishes-Related Operations and Maintenance Activities:

Core Drilling Activities in Locations Where ACM Floor Tile and/or Mastic is Present

1. Where core drilling is required, the floor tile and mastic will be removed from the coring location(s) by the licensed asbestos removal contractor using MA DOS certified asbestos workers prior to the start of coring activities. Floor tile and mastic removal work will be overseen by a competent person as required by OSHA regulations.

2. The location(s) where core drilling is required will be marked in advance. To the extent feasible, core drilling locations will be adjusted to fall within a single floor tile.

3. The floor tile and mastic removal and core drilling work will be performed off-hours.

4. A regulated work area will be established that encompasses the coring locations by posting asbestos warning signs and yellow caution tape at each entrance to the regulated work area. Access to the regulated work area will be restricted to asbestos-trained persons.

5. The HVAC system servicing the regulated area will be shut down during the work.

6. Minimum personnel protective equipment for workers performing the floor tile removal shall be disposable full body coveralls, rubber boots, eye protection, and ½ face air purifying respirators equipped with P-100 filters, unless a greater level of protection is required.

7. The floor tile (s) that will be removed will be heated using an electric heat gun to soften the tile sufficiently to allow intact removal.

8. The tile will be gently removed intact using hand tools and placed in asbestos disposal bags or drums and wetted for disposal as asbestos containing waste. Reinforced containers shall be utilized to prevent tearing of disposal containers.

9. The floor tile mastic will be removed from the coring location using a low-odor liquid mastic removal solvent. Care shall be taken to prevent the solvent from damaging remaining flooring. Cloth rags and nylon scrubbing pads shall be used to remove all mastic from the coring location(s). All used cleaning materials shall be containerized and disposed of as asbestos-containing waste in accordance with federal, state, and local regulations.

10. A visual inspection will be performed by the asbestos removal contractor's supervisor or by a Massachusetts DOS certified asbestos project monitor to determine if visible dust or debris remains in the coring location(s). The asbestos removal contractor shall continue cleaning activities until it is determined that all visible dust and debris has been removed.

11. Asbestos waste will not be stored in the buildings. All asbestos waste will be removed on a daily basis by the asbestos removal contractor.

12. The Asbestos Program Manager or Asbestos Consultant will inspect the underside of the floor slab in each coring location to determine if other ACMs are present that may be disturbed by the planned coring activities.

13. Coring of the cleaned floor will be performed by workers that have received a minimum of 2 hours of asbestos awareness training and that have received site-specific information regarding the presence of asbestos-containing materials in the coring locations.

Removal of Carpet Adhered to Floor Tile

1. Removal of carpet will be performed by workers that have received a minimum of 2 hours of asbestos awareness training and that have received site-specific information regarding the presence of asbestos-containing materials in the carpet removal locations.

2. Carpet removal workers shall use caution when cutting sections of carpet to be removed to prevent damage to the underlying floor tile.

3. Completely intact but loose floor tiles that are exposed during carpet removal shall remain in the area for reinstallation by the licensed asbestos removal contractor. Care shall be used to ensure that any loose floor tiles are not disposed of with the carpet.

4. If floor tile breakage occurs or if deteriorated floor tiles are encountered, carpet removal activities shall immediately stop and the carpet and damaged areas of floor tile will be removed by the licensed asbestos removal contractor using asbestos work practices and engineering controls accordance with 310 CMR 7.15 and 453 CMR 6.00.

Installation of Wall Partition Sole Plates (Wall Track) over ACM Floor Tile and/or Mastic

1. Installation of wall track will be performed by the licenses asbestos contractor or by 16-hour trained asbestos associated workers.

2. The location(s) where the wall track will be attached will be marked in advance.

3. If floor tile that the wall track will be fastened to is deteriorated or if the floor tile and/or mastic will be subject to drilling, cutting, abrading, sanding, chipping, breaking, or sawing, then this procedure will not be utilized and the floor tiles and mastic will be removed by the licensed asbestos removal contractor using asbestos work practices and engineering controls accordance with 310 CMR 7.15 and 453 CMR 6.00.

4. The installation work will be performed during off-hours.

5. A regulated work area will be established that encompasses the installation locations by posting asbestos warning signs and yellow caution tape at each entrance to the regulated work area. Access to the regulated work area will be restricted to asbestos-trained persons. No

smoking, eating, drinking, chewing tobacco or gum, or applying cosmetics is permitted in the regulated work area.

6. The HVAC system servicing the regulated area will be shut down during the work.

7. The wall track will be attached to the floor using powder-actuated fasteners.

8. Workers operating the powder-actuated fasteners shall be certified to operate powder-actuated tools and shall follow all appropriate safety precautions recommended by the tools manufacturer.

9. Minimum personnel protective equipment for workers performing the installation shall be disposable full body coveralls, rubber boots, eye protection, hearing protection, hard hats, and ½ face air purifying respirators equipped with P-100 filters, unless a greater level of protection is required.

10. A bead of caulk will be applied to all sides of the bottom of the wall track prior to fastening. The purpose of the caulk is to seal any gaps between the bottom of the wall track and the flooring. Alternatively, a four-inch wide strip of double-sided duct tape may be used to create an airtight seal between the floor tile and the wall track.

11. If breakage occurs to flooring as a result of the fastening or if visible dust emissions are observed, installation activities shall immediately stop and the floor tile and mastic located in the wall track installation locations will be removed by the licensed asbestos removal contractor using asbestos work practices and engineering controls accordance with 310 CMR 7.15 and 453 CMR 6.00. Decontamination of the area shall be performed using wet cleaning methods and/or HEPA vacuuming.

10.0 Emergency Response

Emergency Response:

As long as ACM remains in the building, the potential for an emergency episode involving the release of asbestos is present. This section describes contingency measures in the event of an emergency involving the release of asbestos fibers. Building emergencies which do not involve asbestos in any way are not affected by these provisions.

1. A minor fiber release episode involves the uncontrolled or unintentional release or disturbance of three or fewer square or linear feet of ACM that produces visible dust or debris.

2. A major fiber release episode involves the uncontrolled or unintentional release or disturbance of greater than three square or linear feet of ACM that produces visible dust or debris.

3. Building personnel shall be aware of any possible evidence of fiber release episodes, including debris near the presence of damaged ACM, or water or physical damage to ACM. Debris associated with known asbestos-containing materials should be assumed to be asbestos-containing unless bulk sampling and laboratory analysis of the debris indicates otherwise.

4. The Asbestos Program Manager shall be notified in the event that BSB, Tenant Agencies, maintenance, engineering, or housekeeping staff becomes aware of ACM that has been disturbed.

5. The Asbestos Program Manager shall assess the situation and determine whether ACM may have been disturbed and the actions to take. The Asbestos Program Manager shall determine whether the situation is an emergency.

6. An emergency is an unplanned situation which is a threat to life or property. When assessing the situation, the Asbestos Program Manager shall consider whether a situation may become more of an emergency before a licensed asbestos contractor will arrive on site.

7. The Asbestos Program Manager shall take the minimum actions necessary to ensure the protection of life and property until an asbestos contractor arrives on site. Actions that may be taken include, but are not necessarily limited to:

   - ✓ Restricting access to the fiber release area to ensure that the ACM is not further disturbed by building occupants.
   - ✓ Shutting down HVAC systems servicing the fiber release area.

- ✓ Evacuating areas of the building impacted by a major fiber release episode.
- ✓ Prohibiting building occupants from removing asbestos contaminated items from the fiber release area.

8. The Asbestos Program Manager shall document each fiber release episode, including reports from all involved parties, the amount of ACM disturbed, and all measures taken. (See Example Form 10-1)

9. The Asbestos Removal Contractor will be used to perform repair or removal of damaged ACM and decontamination of building surfaces associated with both minor and major fiber release episodes.

10. The following minimum work practice requirements, engineering controls, and personal protective equipment shall be utilized by the Asbestos Removal Contractor when responding to minor fiber release episodes:
    - ✓ Establish regulated work area by posting asbestos danger signs.
    - ✓ Restrict access to the regulated work area to only authorized asbestos-trained persons.
    - ✓ Workers shall wear full-body disposable protective coveralls and appropriate respiratory protection.
    - ✓ Wet all ACM debris with amended water and place debris in double 6-mil thickness polyethylene asbestos disposal bags.
    - ✓ Encapsulate exposed edges of remaining ACM.
    - ✓ Thoroughly clean all surfaces located within the regulated work area using HEPA vacuuming and wet cleaning methods.
    - ✓ The use of dry sweeping methods shall be prohibited.
    - ✓ Repeat cleaning until all visible dust and debris is removed from the regulated work area.
    - ✓ A final visual inspection of the regulated work area shall be performed by the Asbestos Supervisor and/or the Owner's Asbestos Consultant.
    - ✓ Containerize all used cleaning cloths, protective clothing, filters, etc. in double 6-mil thickness polyethylene asbestos disposal bags.
    - ✓ Complete an asbestos waste shipping record and attach generator labels to all asbestos disposal bags and dispose as ACM waste at an EPA permitted disposal facility.

11. The following minimum work practice requirements, engineering controls, and personal protective equipment shall be utilized by the Asbestos Removal Contractor when

responding to major fiber release episodes:

- ✓ Obtain emergency waiver from the Massachusetts DEP and DOS.
- ✓ Establish a negative pressure regulated work area by posting asbestos danger signs, sealing all openings from the work area, and installing a sufficient number of air filtration devices equipped with HEPA filters to maintain a minimum negative air pressure of 0.02 inches water column.
- ✓ Shutdown all HVAC system components located within the regulated work area. Seal all grills, vents, and diffusers with 2 layers of 6-mil thickness polyethylene sheeting secured with duct tape.
- ✓ Establish a decontamination unit for workers.
- ✓ Establish a decontamination unit for removal of ACM waste and equipment from the work area.
- ✓ Restrict access to the regulated work area to only authorized asbestos-trained persons.
- ✓ Workers shall wear full-body disposable protective coveralls and appropriate respiratory protection.
- ✓ Wet all ACM debris with amended water and place debris in double 6-mil thickness polyethylene pre-printed asbestos disposal bags.
- ✓ Encapsulate exposed edges of remaining ACM.
- ✓ Thoroughly clean all surfaces located within the regulated work area using HEPA vacuuming and wet cleaning methods.
- ✓ The use of dry sweeping methods shall be prohibited.
- ✓ A final visual inspection shall be performed by the Owner's Asbestos Consultant. Cleaning of the work area shall be repeated until the Owner's Asbestos Consultant determines that all visible dust and debris have been removed from the regulated work area.
- ✓ The Owner's Asbestos Consultant will perform air clearance monitoring within the regulated work area in accordance with Massachusetts DOS requirements.
- ✓ Containerize all used cleaning cloths, protective clothing, filters, etc. in double 6-mil thickness polyethylene pre-printed asbestos disposal bags.
- ✓ Complete an asbestos waste shipping record and attach generator labels to all asbestos disposal bags and dispose as ACM waste at an authorized asbestos disposal facility.

Form 10-1
Asbestos Emergency Response Form

Estimated Date and Time of ACM Disturbance:_____

Location: Floor_____ **Area:**_____

Type of ACM(s) Disturbed:_____

Likely Cause of Damage to ACM(s) (Attach additional notes if needed):

_____
_____
_____
_____
_____

Describe Response Actions Taken (Attach additional notes if needed):

_____
_____
_____
_____

Asbestos Contractor(s), Asbestos Consultant(s) and Building Employees Involved in Response:

Name	Company	DOS Cert. No.

Start Date of Abatement: _____

Completion Date of Abatement:_____

Quantities of ACM Removed/Repaired _____

Air Samples Collected During Abatement Activities? Yes* / No

***Please attach report from laboratory analyzing air samples which includes - (1) Name and Address of Laboratory, (2) Date and Results of Air Samples, (3) Name and Signature of Person Performing Analysis, (4) Method of Analysis, and (5) Applicable Laboratory Certification Numbers.**

Report Prepared by:

Name:_____ **Title:**_____

Signature: _____ **Date:**_____

Periodic Surveillance:

1. As long as a building contains ACM or assumed ACM, a periodic surveillance will be conducted of ACM in each building managed by BSB on an annual basis.
2. The periodic surveillance will consist of a visual inspection of all known ACM or assumed ACM located in accessible areas of the building.
3. The purpose of the surveillance is to determine if there has been a change in the condition of the materials.
4. The periodic surveillance inspection will be conducted by individuals familiar with the building and the specific locations of asbestos at the site. The person(s) performing the periodic surveillance does not require licensure as a Mass. DOS asbestos inspector; however, the person(s) must receive at least 2 hours of asbestos awareness training.
5. The findings of the surveillance inspection shall be recorded in writing and signed and dated by the person performing the surveillance. Forms that may be used to record periodic surveillance results are provided in this section (Form 11-1 through 11-6).
6. The following information shall be recorded for each periodic surveillance inspection:
   a. Date(s)of the periodic surveillance
   b. Name of the person(s) performing the inspection
   c. Note the presence of any damage due to water, contact, and other damage.
   d. Changes in building use that may have an impact on asbestos, such as installation of new equipment
7. Submit the above information to the Asbestos Program Manager.

11.0 Periodic Surveillance

Figure 11-1

FORM FOR PERIODIC REINSPECTION OF ACM

Name of Person Performing the Surveillance Reinspection:_____

Date of Inspection:_____

Building: John W. McCormack Building, One Ashburton Place, Boston, Massachusetts

MATERIAL DESCRIPTION	LOCATION	OBSERVED CONDITION (check one)			DESCRIPTION OF DAMAGE (List location(s) and type(s) of damage and any comments. Attach additional sheets as necessary)
Mudded fitting insulation and end seam sealant on fibrous glass pipe insulation	Throughout building including mechanical areas, within mechanical chases, etc.	**Good**	**Damaged**	**Significantly Damaged**	
Joint compound on gypsum board	Throughout building on original gypsum board walls such as the common walls between the hallways and perimeter office suites, bathroom walls, etc.	**Good**	**Damaged**	**Significantly Damaged**	

11.0 Periodic Surveillance

Building: John W. McCormack Building, One Ashburton Place, Boston, Massachusetts

MATERIAL DESCRIPTION	LOCATION	OBSERVED CONDITION (check one)			DESCRIPTION OF DAMAGE (List location(s) and type(s) of damage and any comments. Attach additional sheets as necessary)
Caulking on seams of air handling units	Twenty-second floor, seventh floor, and level one mechanical rooms	**Good**	**Damaged**	**Significantly Damaged**	
Fire stop (various colors) at penetrations in walls and floors	Throughout, including induction units located in perimeter offices, and in electrical and telephone services rooms	**Good**	**Damaged**	**Significantly Damaged**	
12" Tan floor tile and associated mastic	Various areas throughout building, exposed and beneath carpet	**Good**	**Damaged**	**Significantly Damaged**	

11.0 Periodic Surveillance

Building: John W. McCormack Building, One Ashburton Place, Boston, Massachusetts

MATERIAL DESCRIPTION	LOCATION	OBSERVED CONDITION (check one)			DESCRIPTION OF DAMAGE (List location(s) and type(s) of damage and any comments. Attach additional sheets as necessary)
12" Tan floor tile with streaks and associated mastic	Various areas throughout building, exposed and beneath carpet	**Good**	**Damaged**	**Significantly Damaged**	
Duct seam sealant (various colors)	Throughout including air handing units and associated ducts located in mechanical rooms, above suspended ceilings, and within mechanical chases, etc.	**Good**	**Damaged**	**Significantly Damaged**	
Glazing compound associated with interior windows and doors	Throughout	**Good**	**Damaged**	**Significantly Damaged**	

11.0 Periodic Surveillance

Building: John W. McCormack Building, One Ashburton Place, Boston, Massachusetts

MATERIAL DESCRIPTION	LOCATION	OBSERVED CONDITION (check one)			DESCRIPTION OF DAMAGE (List location(s) and type(s) of damage and any comments. Attach additional sheets as necessary)
Coating on metal ceiling grid edge	Throughout building around perimeter of ceiling tile grid	**Good**	**Damaged**	**Significantly Damaged**	
Caulking in expansion joint	Air intake room, level 1 mechanical room	**Good**	**Damaged**	**Significantly Damaged**	

11.0 Periodic Surveillance

Figure 11-2

FORM FOR PERIODIC REINSPECTION OF ACM

Name of Person Performing the Surveillance Reinspection:_____

Date of Inspection:_____

Building: Charles F Hurley Building, 19 Staniford Street, Boston, Massachusetts

MATERIAL DESCRIPTION	LOCATION	OBSERVED CONDITION (check one)			DESCRIPTION OF DAMAGE (List location(s) and type(s) of damage and any comments. Attach additional sheets as necessary)
Duct seam sealant (various colors)	Throughout	Good	Damaged	Significantly Damaged	
Adhesive on cork vibration dampener	Beneath air handling units, mechanical rooms 1, 2, and 3	Good	Damaged	Significantly Damaged	

11.0 Periodic Surveillance

Building: Charles F Hurley Building, 19 Staniford Street, Boston, Massachusetts

MATERIAL DESCRIPTION	LOCATION	OBSERVED CONDITION (check one)			DESCRIPTION OF DAMAGE (List location(s) and type(s) of damage and any comments. Attach additional sheets as necessary)
Paper beneath cork vibration dampener	Beneath air handling units, mechanical rooms 1, 2, and 3	**Good**	**Damaged**	**Significantly Damaged**	
Pipe insulation debris on floors	Upper and lower steam tunnels	**Good**	**Damaged**	**Significantly Damaged**	
Coating on rear of induction unit enclosures	Throughout within perimeter induction units	**Good**	**Damaged**	**Significantly Damaged**	

11.0 Periodic Surveillance

Building: Charles F Hurley Building, 19 Staniford Street, Boston, Massachusetts

MATERIAL DESCRIPTION	LOCATION	OBSERVED CONDITION (check one)			DESCRIPTION OF DAMAGE (List location(s) and type(s) of damage and any comments. Attach additional sheets as necessary)
Caulk in joint between perimeter wall and concrete floor slab	Throughout	Good	Damaged	Significantly Damaged	
Caulk in joint between concrete floor slab and metal window frame	Throughout	Good	Damaged	Significantly Damaged	
Vapor barrier/mastic on perimeter walls	Observed on the sixth floor and assumed present throughout within perimeter walls.	Good	Damaged	Significantly Damaged	

11.0 Periodic Surveillance

Building: Charles F Hurley Building, 19 Staniford Street, Boston, Massachusetts

MATERIAL DESCRIPTION	LOCATION	OBSERVED CONDITION (check one)			DESCRIPTION OF DAMAGE (List location(s) and type(s) of damage and any comments. Attach additional sheets as necessary)
Black mastic between column and metal wall panel	Elevator lobby, fifth floor	Good	Damaged	Significantly Damaged	
Mastic on top of concrete wall on wood	At stick pin	Good	Damaged	Significantly Damaged	
Vapor barrier within wet walls	Restrooms areas under ceramic floor and wall tiles	Good	Damaged	Significantly Damaged	

11.0 Periodic Surveillance

Building: Charles F Hurley Building, 19 Staniford Street, Boston, Massachusetts

MATERIAL DESCRIPTION	LOCATION	OBSERVED CONDITION (check one)			DESCRIPTION OF DAMAGE (List location(s) and type(s) of damage and any comments. Attach additional sheets as necessary)
Adhesive associated with 12" gray floor tiles	First floor, Part I	**Good**	**Damaged**	**Significantly Damaged**	
Gasket at bolted pipe flange connection	Throughout on mechanical components	**Good**	**Damaged**	**Significantly Damaged**	
Mudded pipe fitting insulation, end seam sealant, and insulation at pipe hangers on fiberglass insulated lines	Throughout	**Good**	**Damaged**	**Significantly Damaged**	

11.0 Periodic Surveillance

Building: Charles F Hurley Building, 19 Staniford Street, Boston, Massachusetts

MATERIAL DESCRIPTION	LOCATION	OBSERVED CONDITION (check one)			DESCRIPTION OF DAMAGE (List location(s) and type(s) of damage and any comments. Attach additional sheets as necessary)
Pipe insulation	Observed in basement and tunnels, additional may be present in other building areas.	**Good**	**Damaged**	**Significantly Damaged**	
Spray-applied fireproofing	All accessible ACM fireproofing has been removed and inaccessible areas have been enclosed within solid barriers	**Good**	**Damaged**	**Significantly Damaged**	
9" floor tile and associated floor tile adhesive	Observed in various areas below carpet	**Good**	**Damaged**	**Significantly Damaged**	

11.0 Periodic Surveillance

Building: Charles F Hurley Building, 19 Staniford Street, Boston, Massachusetts

MATERIAL DESCRIPTION	LOCATION	OBSERVED CONDITION (check one)			DESCRIPTION OF DAMAGE (List location(s) and type(s) of damage and any comments. Attach additional sheets as necessary)
Emergency generator exhaust insulation	Emergency Generator Room	Good	Damaged	Significantly Damaged	

11.0 Periodic Surveillance

Figure 11-3

FORM FOR PERIODIC REINSPECTION OF ACM

Name of Person Performing the Surveillance Reinspection:_____

Date of Inspection:_____

Building: Erich Lindemann Building, 25 Staniford Street, Boston, Massachusetts

MATERIAL DESCRIPTION	LOCATION	OBSERVED CONDITION (check one)			DESCRIPTION OF DAMAGE (List location(s) and type(s) of damage and any comments. Attach additional sheets as necessary)
Caulking between concrete and metal window frame	Throughout at perimeter of floors	Good	Damaged	Significantly Damaged	
9" White floor tiles with brown streaks	Throughout, exposed and beneath carpet	Good	Damaged	Significantly Damaged	

11.0 Periodic Surveillance

Building: Erich Lindemann Building, 25 Staniford Street, Boston, Massachusetts

MATERIAL DESCRIPTION	LOCATION	OBSERVED CONDITION (check one)			DESCRIPTION OF DAMAGE (List location(s) and type(s) of damage and any comments. Attach additional sheets as necessary)
Caulking at metal panels associated with air handling units	Mechanical rooms	Good	Damaged	Significantly Damaged	
Caulking at fresh air louvers	Mechanical rooms	Good	Damaged	Significantly Damaged	
White block pipe insulation	Maintenance area, ground floor and reportedly present on steam line in elevator shaft 5	Good	Damaged	Significantly Damaged	

11.0 Periodic Surveillance

Building: Erich Lindemann Building, 25 Staniford Street, Boston, Massachusetts

MATERIAL DESCRIPTION	LOCATION	OBSERVED CONDITION (check one)			DESCRIPTION OF DAMAGE (List location(s) and type(s) of damage and any comments. Attach additional sheets as necessary)
Stick pin adhesive associated with fibrous glass insulation panels	Courthouse storage room (former pool)	Good	Damaged	Significantly Damaged	
Black mastic on concrete walls behind fibrous glass insulation panels	Observed in courthouse storage room (former pool) and may be present in on foundation walls in other building areas	Good	Damaged	Significantly Damaged	
Gaskets debris on floor	Pool mechanical room	Good	Damaged	Significantly Damaged	

11.0 Periodic Surveillance

Building: Erich Lindemann Building, 25 Staniford Street, Boston, Massachusetts

MATERIAL DESCRIPTION	LOCATION	OBSERVED CONDITION (check one)			DESCRIPTION OF DAMAGE (List location(s) and type(s) of damage and any comments. Attach additional sheets as necessary)
12" White floor tiles with brown streaks	Fifth floor	Good	Damaged	Significantly Damaged	
Stick pins associated with internal duct insulation	Observed in mechanical areas and may be present in other areas	Good	Damaged	Significantly Damaged	
Red duct seam sealant	Observed in mechanical rooms and on fifth floor. Assume present throughout building on duct seams	Good	Damaged	Significantly Damaged	

11.0 Periodic Surveillance

Building: Erich Lindemann Building, 25 Staniford Street, Boston, Massachusetts

MATERIAL DESCRIPTION	LOCATION	OBSERVED CONDITION (check one)			DESCRIPTION OF DAMAGE (List location(s) and type(s) of damage and any comments. Attach additional sheets as necessary)
Mudded pipe fitting insulation on fiberglass insulated lines	Throughout building	Good	Damaged	Significantly Damaged	
Block insulation at pipe hangers	Throughout building	Good	Damaged	Significantly Damaged	

11.0 Periodic Surveillance

Figure 11-4

FORM FOR PERIODIC REINSPECTION OF ACM

Name of Person Performing the Surveillance Reinspection:_____

Date of Inspection:_____

Building: Massachusetts State House, Boston, Massachusetts

MATERIAL DESCRIPTION	LOCATION	OBSERVED CONDITION (check one)			DESCRIPTION OF DAMAGE (List location(s) and type(s) of damage and any comments. Attach additional sheets as necessary)
Stick pin adhesive	Attic above House of Representatives	**Good**	**Damaged**	**Significantly Damaged**	
Pipe insulation debris on floor	Sub-basement, boiler room crawl space, coal pocket, and crawl space beneath room #55	**Good**	**Damaged**	**Significantly Damaged**	

11.0 Periodic Surveillance

Building: Massachusetts State House, Boston, Massachusetts

MATERIAL DESCRIPTION	LOCATION	OBSERVED CONDITION (check one)			DESCRIPTION OF DAMAGE (List location(s) and type(s) of damage and any comments. Attach additional sheets as necessary)
Floor tile debris	Crawl space beneath room #55	Good	Damaged	Significantly Damaged	
Vibration damper cloth on air handling units	Attic access through room #528	Good	Damaged	Significantly Damaged	
Black coating on fiberglass duct insulation	Attic above golden dome (above Senate Chambers)	Good	Damaged	Significantly Damaged	

11.0 Periodic Surveillance

Building: Massachusetts State House, Boston, Massachusetts

MATERIAL DESCRIPTION	LOCATION	OBSERVED CONDITION (check one)			DESCRIPTION OF DAMAGE (List location(s) and type(s) of damage and any comments. Attach additional sheets as necessary)
Vibration damper cloth	Attic above golden dome (above Senate Chambers)	Good	Damaged	Significantly Damaged	
9" green floor tile	Various areas throughout building	Good	Damaged	Significantly Damaged	
Adhesive associated with 9" green floor tile	Various areas throughout building	Good	Damaged	Significantly Damaged	

11.0 Periodic Surveillance

Building: Massachusetts State House, Boston, Massachusetts

MATERIAL DESCRIPTION	LOCATION	OBSERVED CONDITION (check one)			DESCRIPTION OF DAMAGE (List location(s) and type(s) of damage and any comments. Attach additional sheets as necessary)
Black floor tile	Various areas throughout building as a border tile	Good	Damaged	Significantly Damaged	
Adhesive associated with black floor tile	Various areas throughout building	Good	Damaged	Significantly Damaged	
Adhesive associated with vinyl cove base	Various areas throughout building	Good	Damaged	Significantly Damaged	

11.0 Periodic Surveillance

Building: Massachusetts State House, Boston, Massachusetts

MATERIAL DESCRIPTION	LOCATION	OBSERVED CONDITION (check one)			DESCRIPTION OF DAMAGE (List location(s) and type(s) of damage and any comments. Attach additional sheets as necessary)
12" gray floor tile	Various areas throughout building	Good	Damaged	Significantly Damaged	
Adhesive associated with 12" gray floor tile	Various areas throughout building	Good	Damaged	Significantly Damaged	
9" brown floor tile	Various areas throughout building	Good	Damaged	Significantly Damaged	

11.0 Periodic Surveillance

Building: Massachusetts State House, Boston, Massachusetts

MATERIAL DESCRIPTION	LOCATION	OBSERVED CONDITION (check one)			DESCRIPTION OF DAMAGE (List location(s) and type(s) of damage and any comments. Attach additional sheets as necessary)
Adhesive associated with 9" brown floor tile	Various areas throughout building	Good	Damaged	Significantly Damaged	
9" gray floor tile	Various areas throughout building	Good	Damaged	Significantly Damaged	
Adhesive associated with 9" gray floor tile	Various areas throughout building	Good	Damaged	Significantly Damaged	

11.0 Periodic Surveillance

Building: Massachusetts State House, Boston, Massachusetts

MATERIAL DESCRIPTION	LOCATION	OBSERVED CONDITION (check one)			DESCRIPTION OF DAMAGE (List location(s) and type(s) of damage and any comments. Attach additional sheets as necessary)
Wall panel adhesive	Observed in Room 213, East Wing where a section of paneling was removed. Assume present in other areas	Good	Damaged	Significantly Damaged	

11.0 Periodic Surveillance

Figure 11-5

FORM FOR PERIODIC REINSPECTION OF ACM

Name of Person Performing the Surveillance Reinspection:_____

Date of Inspection:_____

Building: Pittsfield Registry Building, 333 East Street, Pittsfield, Massachusetts

MATERIAL DESCRIPTION	LOCATION	OBSERVED CONDITION (check one)			DESCRIPTION OF DAMAGE (List location(s) and type(s) of damage and any comments. Attach additional sheets as necessary)
Textured skim coat ceiling plaster	Throughout basement	Good	Damaged	Significantly Damaged	
Base coat ceiling plaster	Throughout basement	Good	Damaged	Significantly Damaged	

11.0 Periodic Surveillance

Building: Pittsfield Registry Building, 333 East Street, Pittsfield, Massachusetts

MATERIAL DESCRIPTION	LOCATION	OBSERVED CONDITION (check one)			DESCRIPTION OF DAMAGE (List location(s) and type(s) of damage and any comments. Attach additional sheets as necessary)
9" Beige floor tiles	Basement	Good	Damaged	Significantly Damaged	
Pipe insulation	Throughout	Good	Damaged	Significantly Damaged	
Mudded pipe fitting insulation	Throughout	Good	Damaged	Significantly Damaged	

11.0 Periodic Surveillance

Building: Pittsfield Registry Building, 333 East Street, Pittsfield, Massachusetts

MATERIAL DESCRIPTION	LOCATION	OBSERVED CONDITION (check one)			DESCRIPTION OF DAMAGE (List location(s) and type(s) of damage and any comments. Attach additional sheets as necessary)
Brown floor tiles below carpet	Various areas throughout	Good	Damaged	Significantly Damaged	
Adhesive associated with 12" white floor tile with black streak floor tiles	First floor	Good	Damaged	Significantly Damaged	
Adhesive associated with 12" beige floor tiles	Various areas throughout	Good	Damaged	Significantly Damaged	

11.0 Periodic Surveillance

Building: Pittsfield Registry Building, 333 East Street, Pittsfield, Massachusetts

MATERIAL DESCRIPTION	LOCATION	OBSERVED CONDITION (check one)			DESCRIPTION OF DAMAGE (List location(s) and type(s) of damage and any comments. Attach additional sheets as necessary)
		Good	Damaged	Significantly Damaged	
Cove base adhesive	Throughout				

Figure 11-6

FORM FOR PERIODIC REINSPECTION OF ACM

Name of Person Performing the Surveillance Reinspection:_____

Date of Inspection:_____

Building: Springfield Registry, 165 Liberty Street, Springfield, Massachusetts

MATERIAL DESCRIPTION	LOCATION	OBSERVED CONDITION (check one)			DESCRIPTION OF DAMAGE (List location(s) and type(s) of damage and any comments. Attach additional sheets as necessary)
Joint compound on gypsum board	Various areas, first and second floors	Good	Damaged	Significantly Damaged	
Base molding (various colors) and associated adhesive	Various areas, first and second floors	Good	Damaged	Significantly Damaged	

11.0 Periodic Surveillance

Building: Springfield Registry, 165 Liberty Street, Springfield, Massachusetts

MATERIAL DESCRIPTION	LOCATION	OBSERVED CONDITION (check one)			DESCRIPTION OF DAMAGE (List location(s) and type(s) of damage and any comments. Attach additional sheets as necessary)
Black window sills	Various areas, first and second floors	Good	Damaged	Significantly Damaged	
Cement board	Stairwells	Good	Damaged	Significantly Damaged	
9" Floor tiles (various colors and patterns) and associated adhesive	Various areas, first and second floors	Good	Damaged	Significantly Damaged	

12.0 Recordkeeping

Purpose

1. Recordkeeping is one of the most critical aspects of an Asbestos O&M Program. When all records detailed in this section are kept accurately and in an orderly fashion, the following goals will be met:
   a) Compliance with all federal, state, and local regulatory requirements.
   b) Documentation will provide increased liability protection.
   c) Effective communication with employees, tenants, contractors, and regulatory agency officials will minimize or prevent misunderstandings.

Record Retention

1. Employee training records will be held for the duration of employment plus 30 years.
2. Building records will be held for as long as the buildings are owned by the current owner and shall be transferred to subsequent owners.

Keeper of the Records

1. The Asbestos Program Manager will designate an employee of BSB as Keeper of the Records. The Keeper of the Records will maintain permanent files for all asbestos-related documents in the BSB offices located at One Ashburton Place, Boston, Massachusetts.
2. All files containing an employee's personal information (medical records, social security numbers, etc.) will be treated as confidential material.
3. It may be useful to maintain a database containing electronic versions (pdf files) of asbestos-related documents organized by building and type of document. This will provide a convenient means to quickly review existing asbestos information on a building.

Records to be Maintained

The following documentation shall be maintained in BSB's permanent Asbestos O&M Program files:

1. Records of asbestos training received by BSB employees.
2. Records of asbestos training received by employees of outside contractors and vendors.

3. Records of all employee exposure monitoring performed on BSB employees.
4. Records of all employee exposure monitoring performed on employees of outside contractors and vendors that are related to work performed at buildings managed by BSB.
5. Asbestos area air monitoring results performed for periodic surveillance purposes.
6. Asbestos air monitoring results performed in response to an asbestos release.
7. Asbestos air monitoring results performed during asbestos abatement activities.
8. Respirator training, respirator fit testing and medical surveillance records for BSB employees.
9. Respirator training, respirator fit testing and medical surveillance records for employees of outside contractors and vendors that are related to work performed at buildings managed by BSB.
10. Records of periodic surveillance.
11. Asbestos inspection reports.
12. Asbestos bulk sampling results.
13. Asbestos abatement specifications and work plans.
14. Asbestos abatement contractor closeout documents for each asbestos abatement activity. Asbestos contractor closeout documents shall include, as a minimum, the following documentation:
    a. Asbestos contractor's license issued by the Mass. DOS.
    b. Asbestos worker and supervisor licenses issued by Mass. DOS for each asbestos worker and supervisor that is employed on the project.
    c. Asbestos worker and supervisor training certificates issued by an approved training provider for each asbestos worker and supervisor that is employed on the project.
    d. Respirator fit test records for workers employed on the project.
    e. Medical surveillance monitoring records for workers employed on the project.
    f. Asbestos exposure monitoring reports for workers employed on the project.
    g. Asbestos contractor's daily sign-in/out logs with printed and signed name and Mass. DOS license number for each person who enters the asbestos work area, with the times of entry and exiting.
    h. Asbestos Notifications.
    i. Asbestos waste shipping records signed by the transporter and landfill operator for all waste generated by the project.

12.0 Recordkeeping

j. Notice of violations, cease and desist orders, or other issued by a regulatory authority to the asbestos contractor on the project.

k. Injury reports and incident reports prepared by the asbestos contractor relating to the project.

13.0 Periodic Evaluation

The Asbestos O&M Program will be periodically evaluated and revised to reflect changes in the regulations, state of the art procedures, and to allow for changes to the program.

Schedule for Evaluation

The Asbestos O&M Program will be evaluated at the following times:

- ✓ Annually.
- ✓ Whenever there is a significant change in federal, state, or local regulations or a change in BSB's asbestos guidelines.

Criteria for Evaluation

The criteria for evaluating the program will be:

- ✓ The health and safety of employees, building occupants and visitors.
- ✓ Protection of the environment.
- ✓ Compliance with regulatory requirements.
- ✓ Practicality of the Program.

Partial Revisions

Section 5 of the Asbestos O&M Program Manual may require revision periodically to update information on the types and locations of asbestos in the buildings based on the results of future abatement activities and asbestos inspections that are conducted in buildings managed by BSB.

14.0 Asbestos Regulations

A list of asbestos regulations and guidance documents are provided below for reference.

1. Environmental Protection Agency (EPA):
   - US EPA Title 40, Part 61, "NESHAP"
   - US EPA Title 40 CFR 763, "AHERA-Model Accreditation Plan
   - Guidance for Controlling Friable Asbestos-Containing Materials in Buildings.
   - A Guide to Respiratory Protection for the Asbestos Abatement Industry.
2. Occupational Safety and Health Administration (OSHA):
   - Asbestos Construction Standard, 29 CFR Part 1926.1101
   - Asbestos General Industry Standard, 29 CFR 1910.1001
   - Respiratory Protection, 29 CFR 1910.134
   - Construction Industry Standards, 29 CFR 1926
   - General Industry Standards, 29 CFR 1910
3. U.S. Department of Transportation:
   - 49 CFR 100 - 185, Transportation
4. National Institute for Occupational Safety and Health (NIOSH):
   - "Respiratory Protection A Guide for the Employee."
5. American National Standards Institute (ANSI):
   - Z86.1-1973 - Commodity Specification for Air
   - Z9.2 - HEPA Filter Specifications
   - Z88.2-1980-Respiratory Protective Equipment
6. Massachusetts Division of Occupational Safety:
   - The Removal, Containment or Encapsulation of Asbestos (453 CMR 6.00)
7. Massachusetts Department of Environmental Protection:
   - Amendments to Regulations 310 CMR 7.00, 7.09, 7.15 to Control Airborne Asbestos Emissions for the Control of Air Pollution
8. City of Boston
   - The Environment Department Regulations
   - Fire Department Regulations