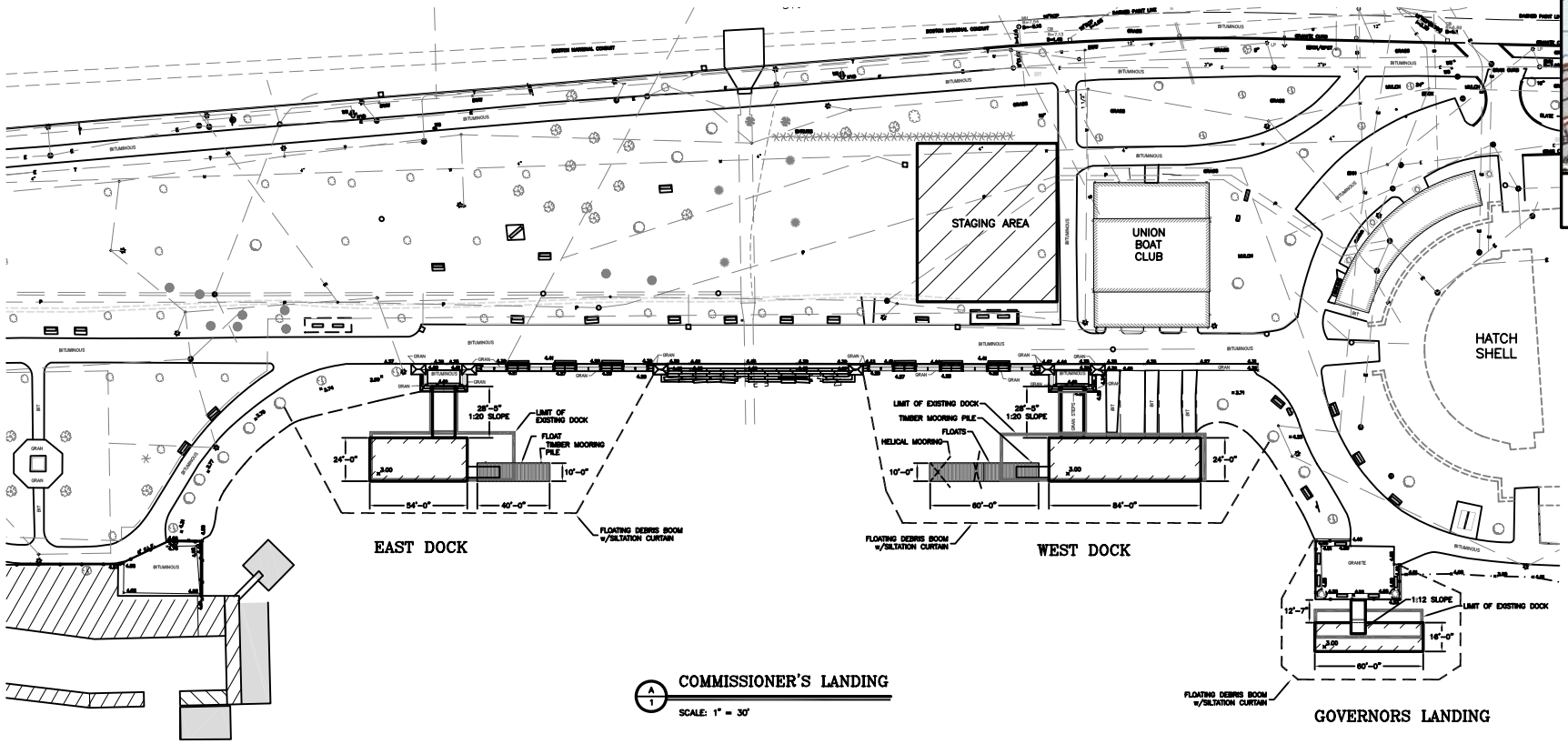

A/1 COMMISSIONER'S LANDING

SCALE: 1" = 30'

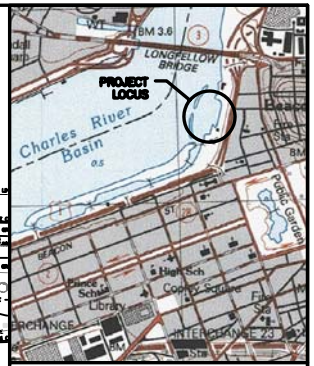

LOCUS PLAN

0 1000 2000

SCALE: 1" = 1,000'

NOTES

1. THIS SURVEY WAS PERFORMED BY BRYANT ASSOCIATES TO FACILITATE DESIGN AND ENGINEERING SERVICES FOR THE RESTORATION OF THE HISTORIC GRANITE OVERLOOK AND STORROW LAGOON COPING ALONG THE CHARLES RIVER BASIN, BOSTON, MA.
2. SURVEY WAS PERFORMED UTILIZING TOTAL STATION AND DATA COLLECTOR.
3. VERTICAL DATUM IS NAVD 1988.
4. PROJECT SOURCE BENCHMARK IS NGS POINT A-37 LOCATED IN THE SOUTHWEST CORNER OF THE FOUNDATION OF THE THIRD ENTRANCE AND MEMORIAL MONUMENT TO BOSTON COMMON PARK ALONG BEACON STREET, DIRECTLY ACROSS STREET FROM SPRUCE STREET, 0.05 MILE EAST OF CHARLES STREET, 38 FEET SOUTH OF THE CENTERLINE OF STREET LINE, 24 FEET NORTHEAST OF A CONCRETE LAMP POLE.
5. OWNERSHIP OF PROPERTY FROM CHARLES RIVER TO STORROW DRIVE IS WITH THE DEPARTMENT OF CONSERVATION AND RECREATION.
6. THE SURFACE EVIDENCE OF THE UTILITIES SHOWN HAS BEEN LOCATED BY FIELD SURVEY. THE LINEWORK REPRESENTING UNDERGROUND STRUCTURES AND PIPES HAS BEEN SHOWN HEREON IN ITS APPROXIMATE LOCATION BASED ON AVAILABLE RECORD PLANS. THE SURVEYOR MAKES NO GUARANTEES THAT THE UNDERGROUND UTILITIES SHOWN COMPRISE ALL SUCH UTILITIES IN THE AREA, EITHER IN SERVICE OR ABANDONED. THE SURVEYOR FURTHER DOES NOT WARRANT THAT THE UNDERGROUND UTILITIES SHOWN ARE IN THE EXACT LOCATION INDICATED ALTHOUGH HE DOES CERTIFY THAT THEY ARE LOCATED AS ACCURATELY AS POSSIBLE FROM INFORMATION AVAILABLE. THE SURVEYOR HAS NOT PHYSICALLY LOCATED THE UNDERGROUND UTILITIES.
7. HORIZONTAL DATUM: MASSACHUSETTS STATE PLANE COORDINATE SYSTEM NAD 1983(1998).

BCE Bourne Consulting Engineering

COMMONWEALTH OF MASSACHUSETTS

DEPARTMENT OF CONSERVATION & RECREATION
DIVISION OF PLANNING & ENGINEERING

RESTORATION OF THE HISTORIC GRANITE OVERLOOKS AND STORROW LAGOON COPING
CHARLES RIVER ESPLANADE - BOSTON

TIMBER DOCKS
COMMISSIONER'S & GOVERNORS LANDINGS

DESIGNED: BAP	CONTRACT NO. PL99-059-C1A		DRAWING NO.
CHECKED:			1
DRAWN: JC	REF.	CONT.	SCALE: AS SHOWN
CHECKED:	ACC.		DATE: 01/15/07

1 OF 8

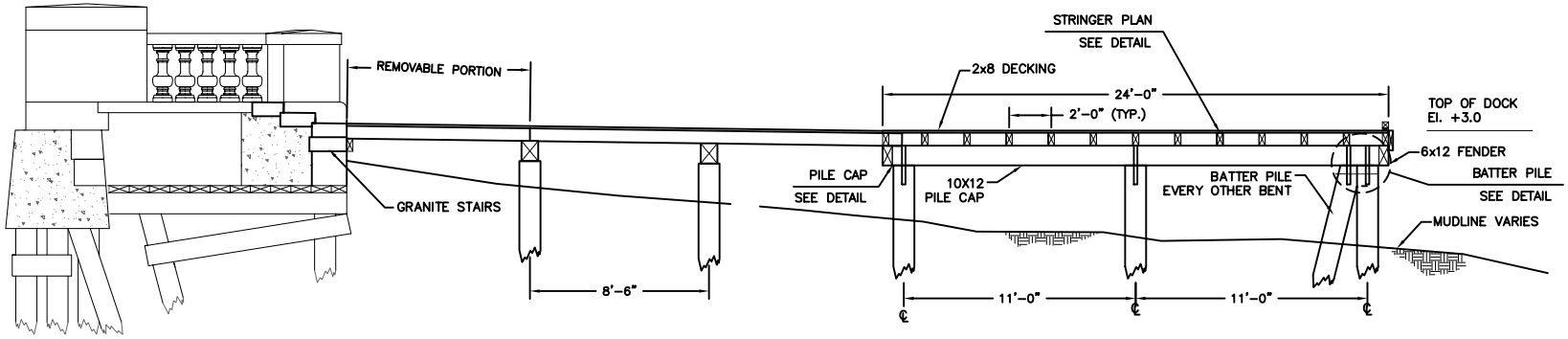

COMMISSIONER'S EAST

SCALE: 3/8"=1'-0"

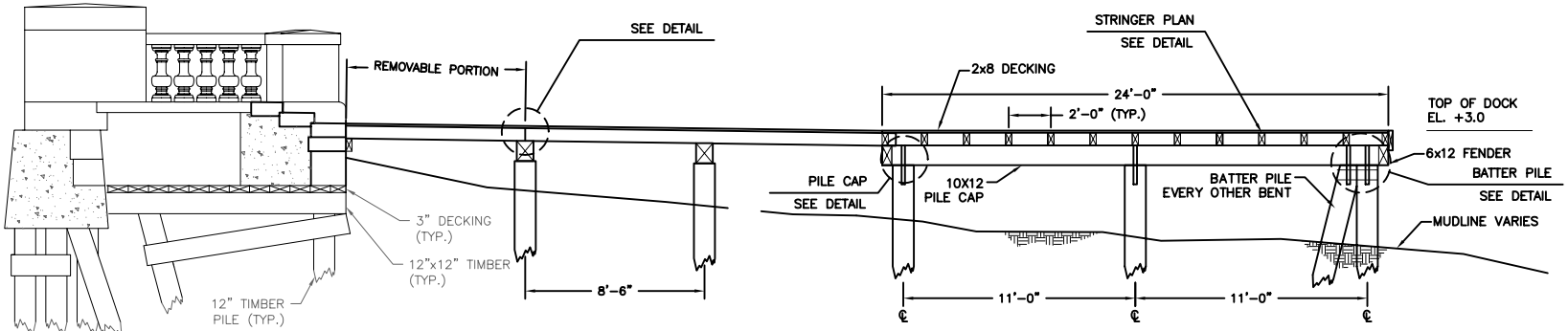

COMMISSIONER'S WEST

SCALE: 3/8"=1'-0"

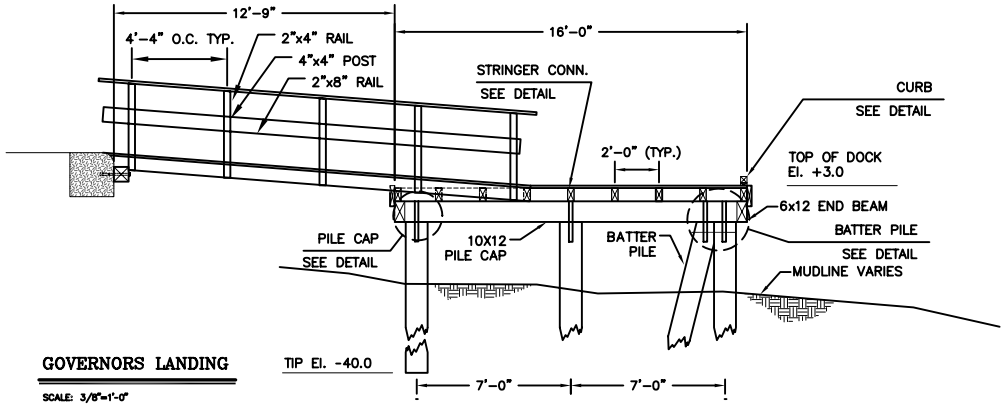

GOVERNORS LANDING

SCALE: 3/8"=1'-0"

RIVER LEVELS NAVD 88 datum

NORMAL WATER LEVEL	1.57	(108.0 MDC)
HIGHEST WATER LEVEL	2.07	(108.5 MDC)
LOWEST WATER LEVEL	0.07	(106.5 MDC)

TIMBER PIER SECTIONS

GRANITE LANDINGS PROJECT
CHARLES RIVER ESPLANADE
BOSTON, MA
FEBRUARY 2007

Bourne Consulting Engineering

EXHIBIT

File: X:\26600-\26629\EXISTING STRUCTURES\Recommendations\WorkGroup 020707\Timber Pier Sections.dwg