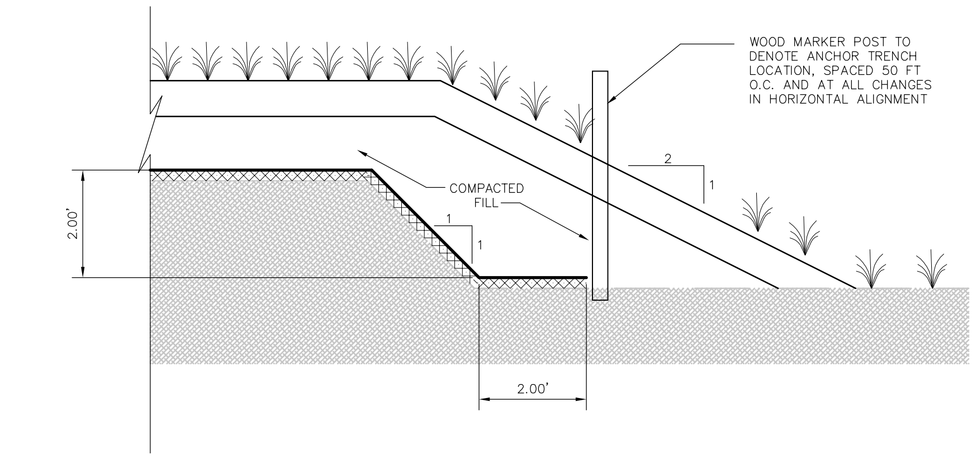

TEMPORARY FINAL COVER ANCHOR TRENCH IN WASTE

DETAIL 1 (1 | 2)
SCALE: 1"= 2'

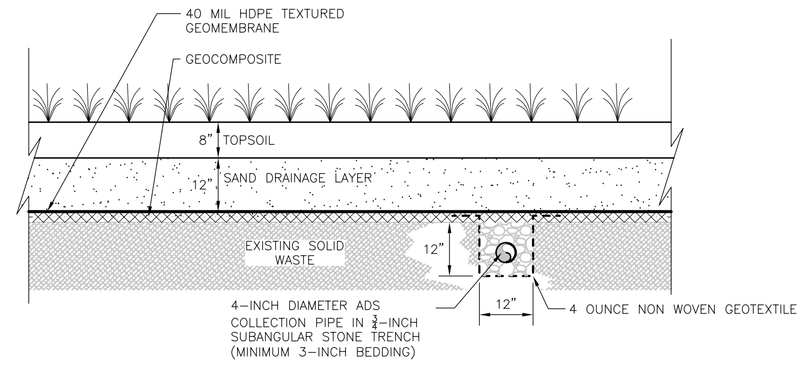

LANDFILL GAS COLLECTION PIPE AND FINAL COVER COMPONENTS

DETAIL 2 (1 | 2)
SCALE: 1"= 2'

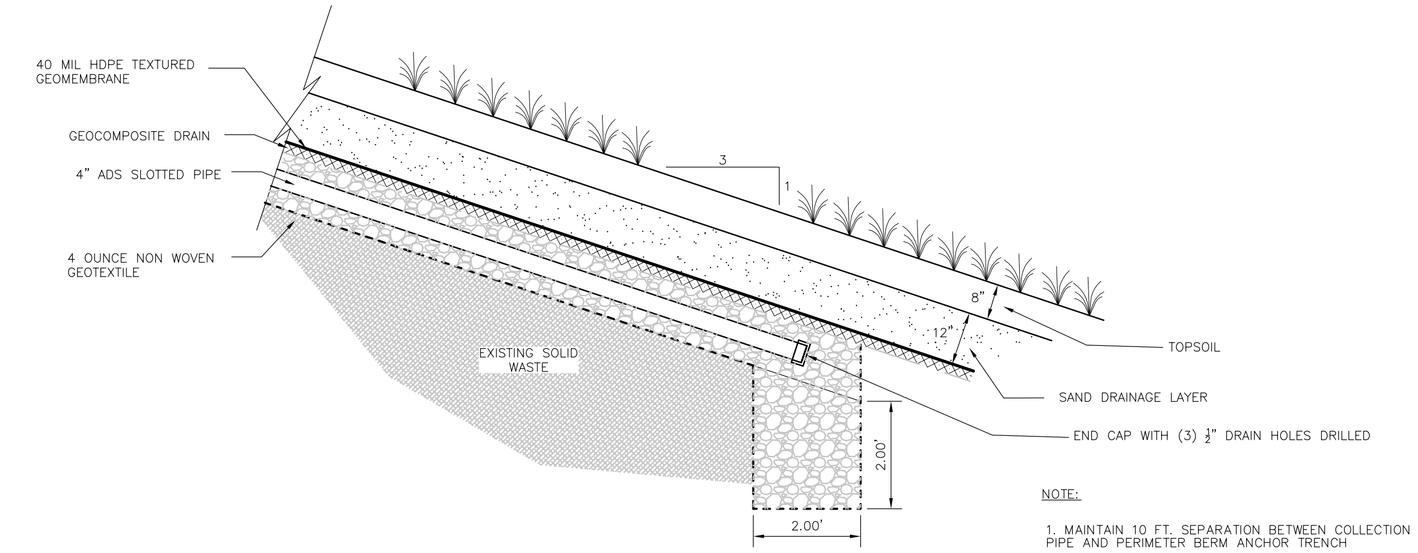

NOTE:

1. MAINTAIN 10 FT. SEPARATION BETWEEN COLLECTION PIPE AND PERIMETER BERM ANCHOR TRENCH

LANDFILL GAS COLLECTION TRENCH STONE SUMP

DETAIL 3 (1 | 2)
SCALE: 1"= 2'

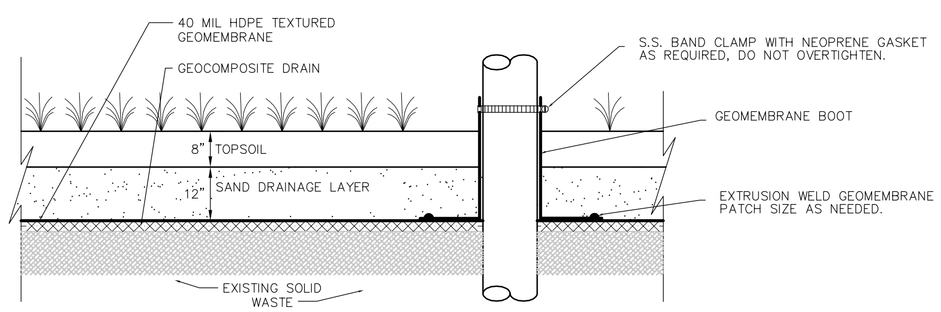

LANDFILL GAS COLLECTION PIPE PENETRATION BOOT

DETAIL 4 (1 | 2)
SCALE: NOT TO SCALE

NOTES:

1. TYPICAL WELL BOOT SHOWN OR APPROVED EQUAL AS PROVIDED BY GEOMEMBRANE LINER INSTALLER.
2. COORDINATE CONSTRUCTION DETAILS WITH GEOMEMBRANE INSTALLER.

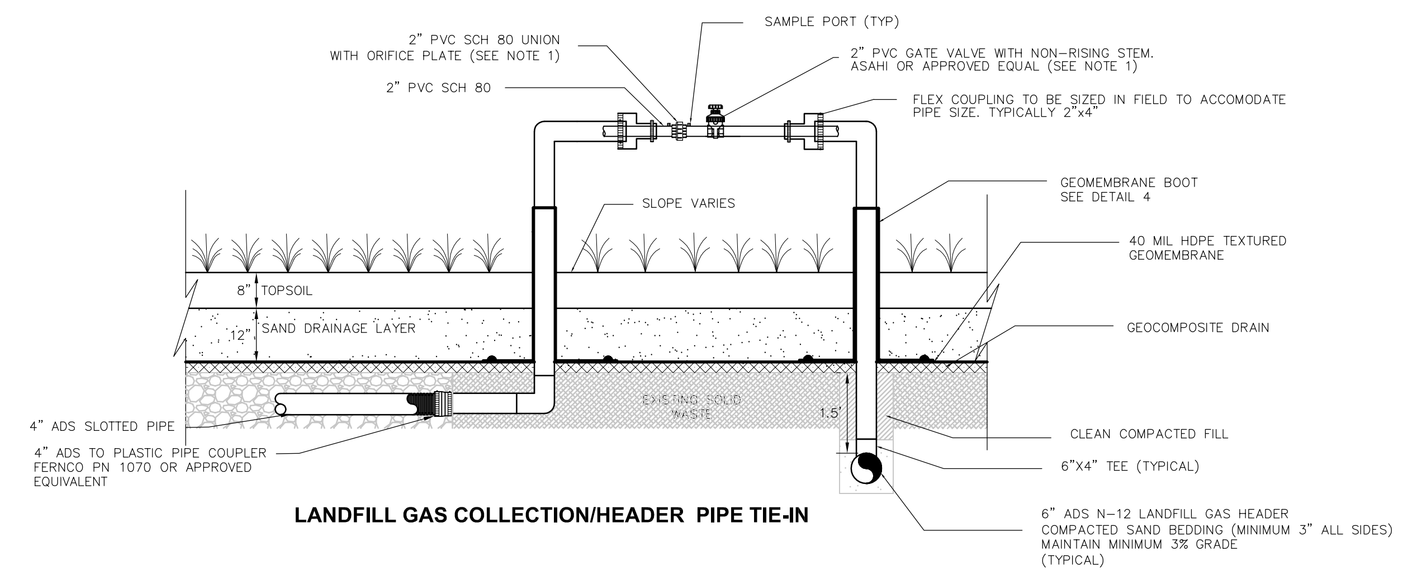

LANDFILL GAS COLLECTION/HEADER PIPE TIE-IN

DETAIL 5 (1 | 2)
SCALE: NOT TO SCALE

NOTE:

1. ORIFICE PLATE AND 2" GATE VALVE CAN BE SUBSTITUTED WITH 2" INTERCHANGEABLE ORIFACE PLATE WELLHEAD AND KANAFLEX HOSE MANUFACTURED BY LFG SPECIALTIES OR APPROVED EQUAL.

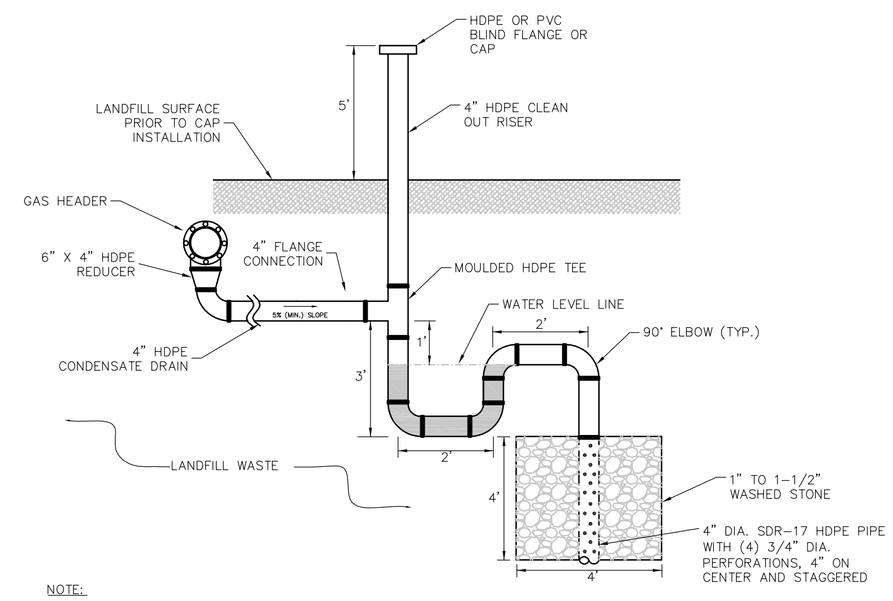

NOTE:

1. DETAIL TAKEN FROM DRAWING TITLED " LANDFILL GAS MANAGEMENT DETAILS" DATED MARCH 3, 2006, PREPARED BY SITEC ENVIRONMENTAL.
2. IF FIELD CONDITIONS WARRANT, BASED ON GRADE AND LOCATION, EXISTING CONDENSATE INFILTRATORS MAY BE USED TO DRAIN PROPOSED HEADER.

CONDENSATE INFILTRATOR

DETAIL 8 (1 | 2)
SCALE: NOT TO SCALE

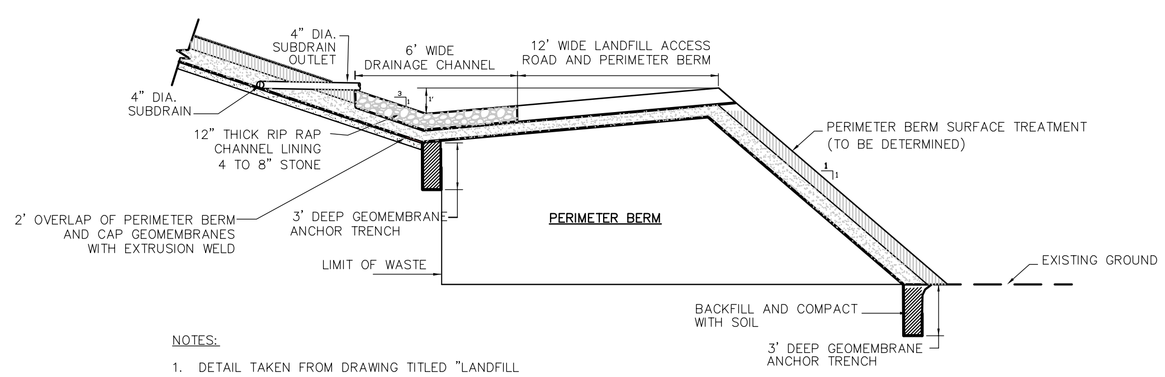

NOTES:

1. DETAIL TAKEN FROM DRAWING TITLED "LANDFILL CROSS-SECTIONS AND PERIMETER ACCESS ROAD/BERM DETAIL" DATED MARCH 17, 2006, PREPARED BY SITEC ENVIROMENTAL.
2. PERMANENT PERIMETER BERM ANCHOR TRENCH TO BE INSTALLED IN AREAS WHERE BERM IS AT FINAL DESIGN HEIGHT. COORDINATE LOCATIONS WITH OWNER PRIOR TO CONSTRUCTION.

PERMANENT PERIMETER BERM ANCHOR TRENCH

DETAIL 6 (1 | 2)
SCALE: NOT TO SCALE

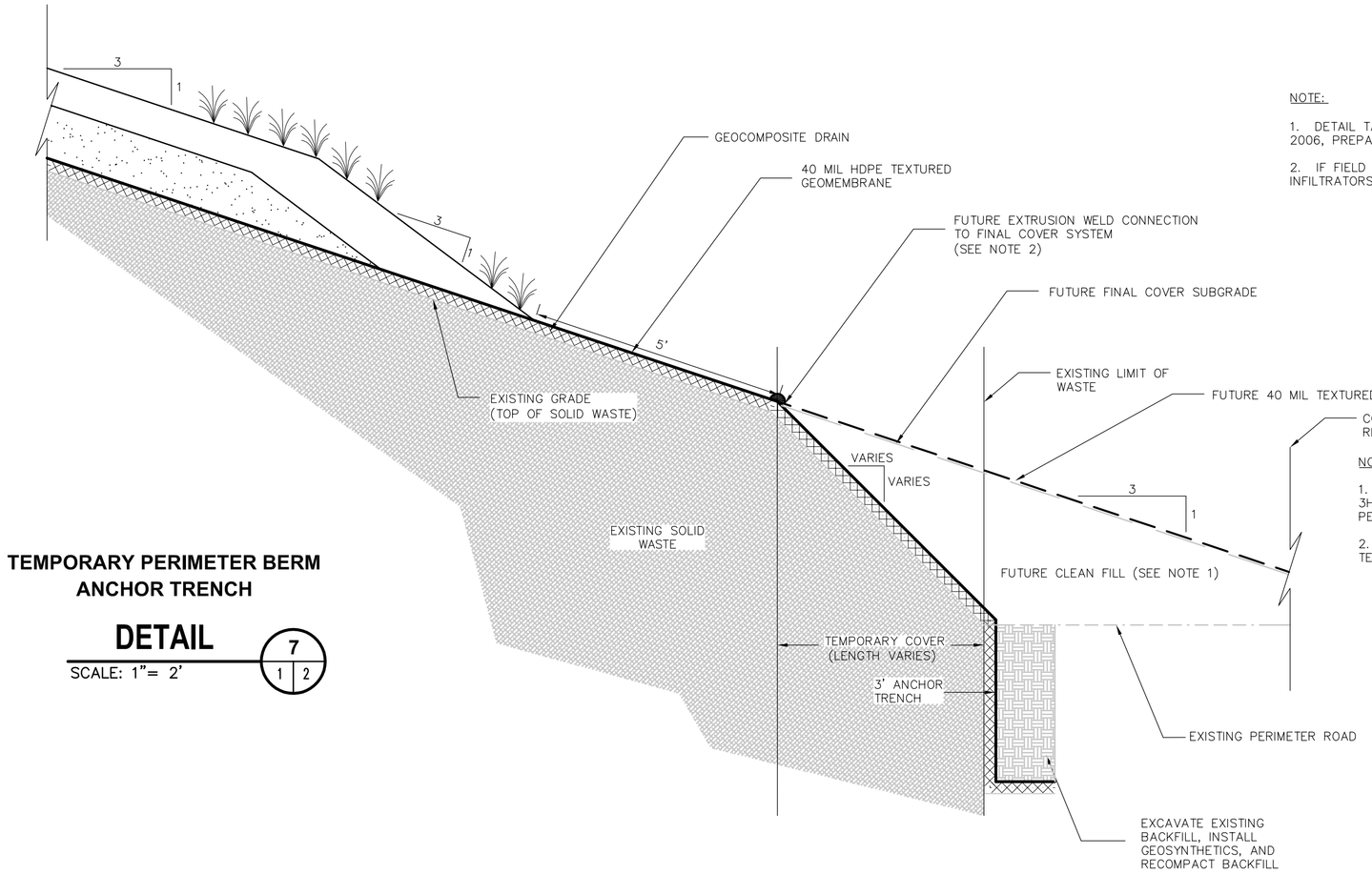

NOTES:

1. CLEAN FILL WILL BE PLACED TO CONSTRUCT 3H:1V FINAL COVER SUBGRADE AND PERMITTED, PERIMETER BERM. REFER TO DETAIL 6, THIS SHEET.
2. AFTER FILL HAS BEEN PLACED, EXTRUSION WELD TEMPORARY LINER TO FINAL LINER.

TEMPORARY PERIMETER BERM ANCHOR TRENCH

DETAIL 7 (1 | 2)
SCALE: 1"= 2'

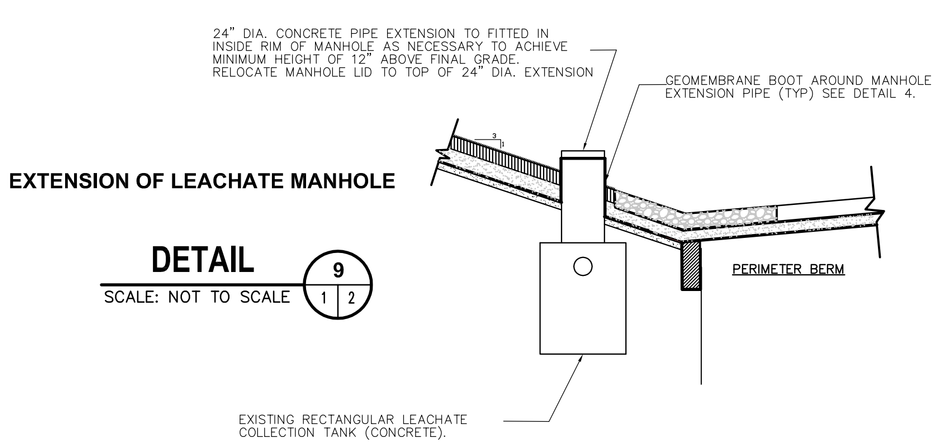

EXTENSION OF LEACHATE MANHOLE

DETAIL 9 (1 | 2)
SCALE: NOT TO SCALE

1" 1/2" 0" 1"

MARK A. SWYKA, P.E.

MA.P.E. Lic. No. 46691 Date

REV	DATE	DESCRIPTION	DWN BY	DES BY	CHK BY	APP BY

DATE OF ISSUE 10/24/06 | DRAWN BY MRB | DESIGNED BY MRB | CHECKED BY AJK | APPROVED BY MS

CORNERSTONE Environmental Group, LLC

This drawing represents intellectual property of Cornerstone Environmental Group, LLC. Any modification to the original by other than Cornerstone Environmental Group, LLC personnel vandals its original purpose and as such is rendered void. Cornerstone Environmental Group, LLC will not be held liable for any changes made to this document without express written consent of the originator.

NEW VENTURES ASSOCIATES, LLC
CROW LANE LANDFILL GAS COLLECTION PLAN
NEWBURYPORT, MASSACHUSETTS

GAS DETAILS

SHEET NO. **2**

PROJECT NO. 060251