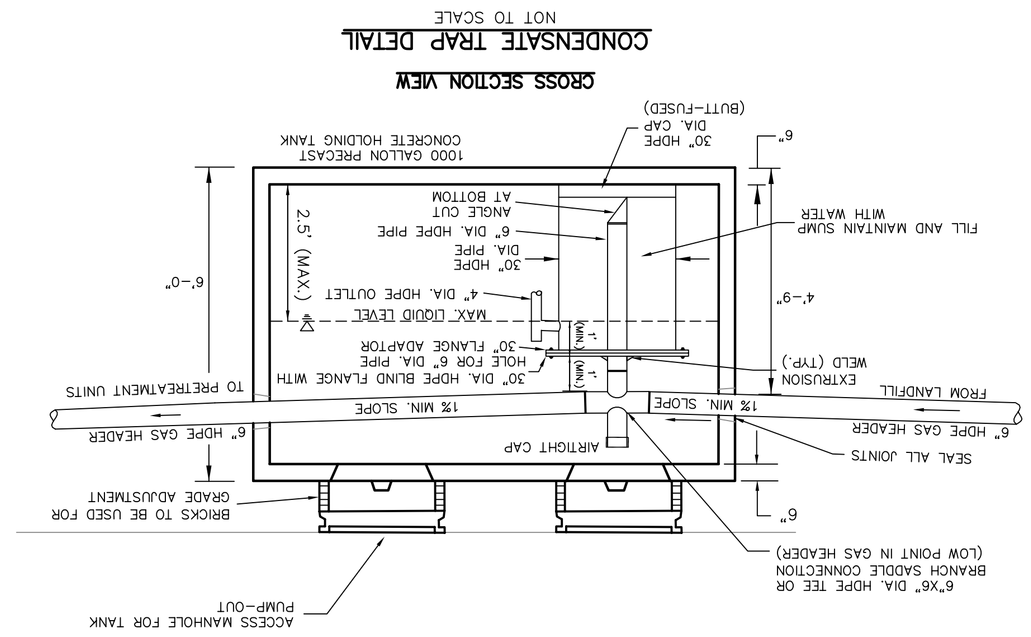


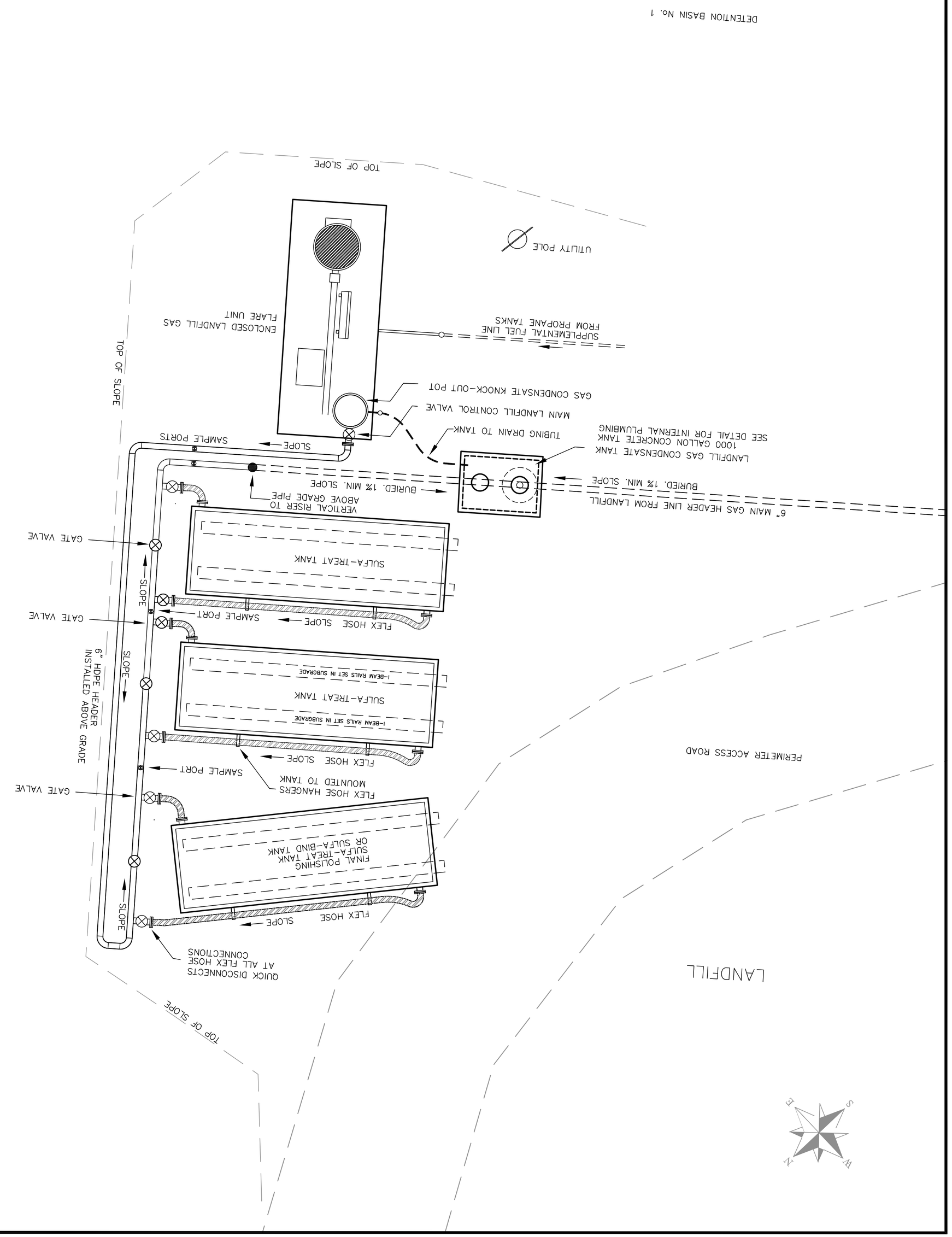


SITEC ENVIRONMENTAL
Civil and Environmental Engineering
Land Use Planning and Surveying
Hazardous and Solid Waste Consultants

769 Plain Street, Unit C
Marshfield, MA 02050
PHONE (781) 319-0100
FAX (781) 834-4783

project: CORRECTIVE ACTION DESIGN
CROW LANE LANDFILL
NEWBURYPORT, MASSACHUSETTS

client: NEW VENTURES ASSOCIATES, L.L.C.

drawing title: LANDFILL GAS TREATMENT SYSTEM
PIPING DIAGRAM

scale: 1"=5'
date: MAR. 1, 2007
drawn: JAC
checked: MQ
approved: ARQ
drawing number: 1

| No. | Date | Revision Description | Chkd. by | Appvd. by |
|---|---|---|---|---|
| | | | | |

Acad No.
File No.