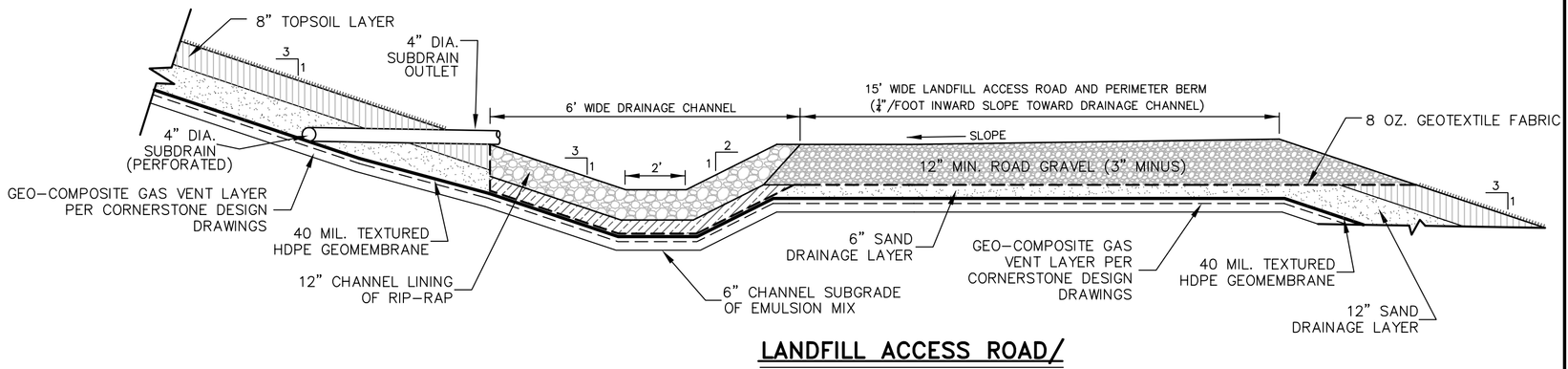

LANDFILL ACCESS ROAD/ DRAINAGE SWALE DETAIL

NOT TO SCALE

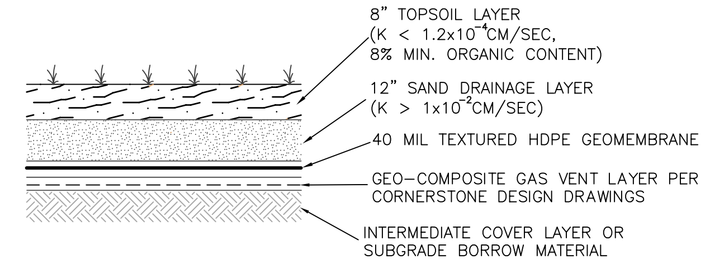

FINAL COVER SYSTEM COMPONENTS

NOT TO SCALE

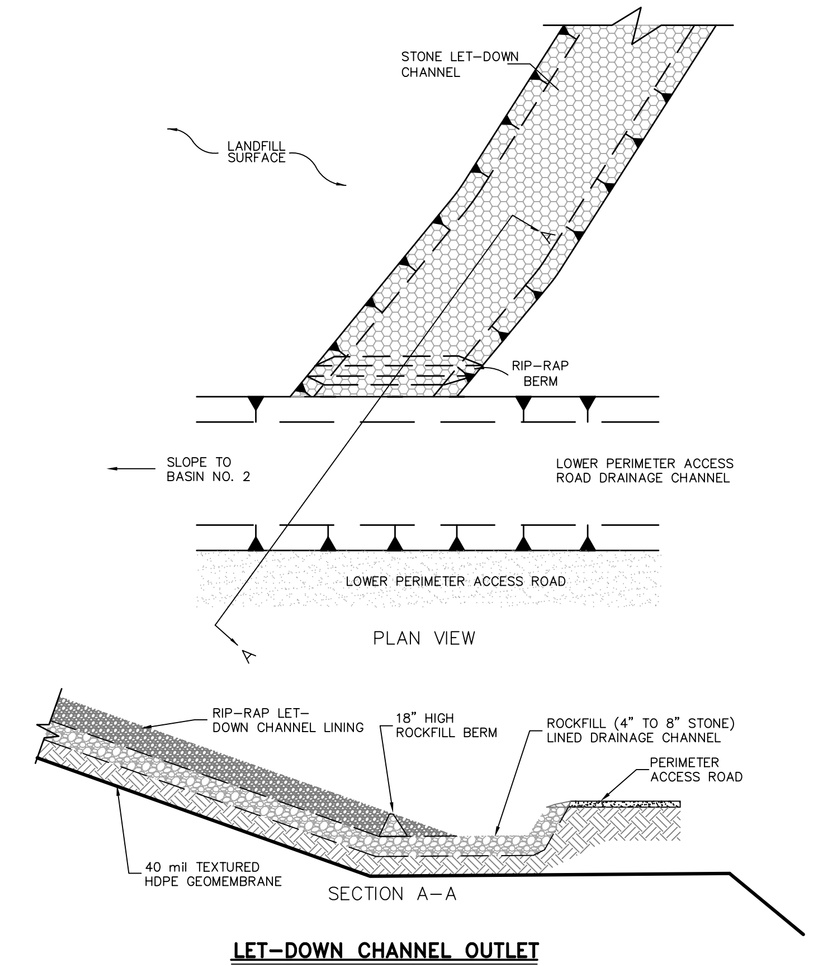

LET-DOWN CHANNEL OUTLET

NOT TO SCALE

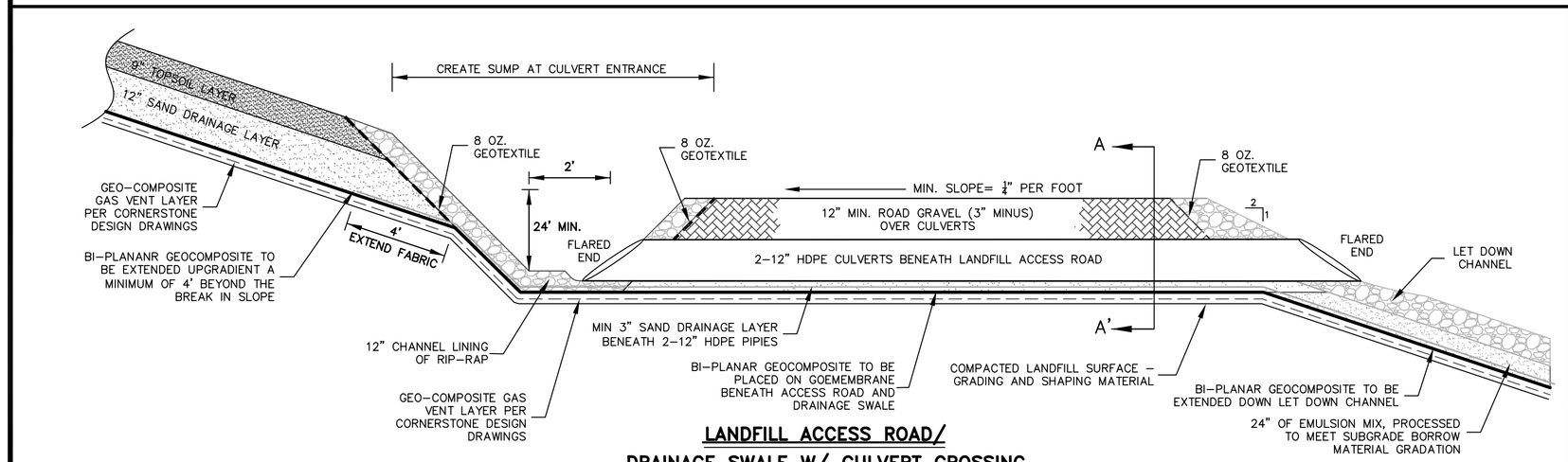

LANDFILL ACCESS ROAD/ DRAINAGE SWALE W/ CULVERT CROSSING

NOT TO SCALE

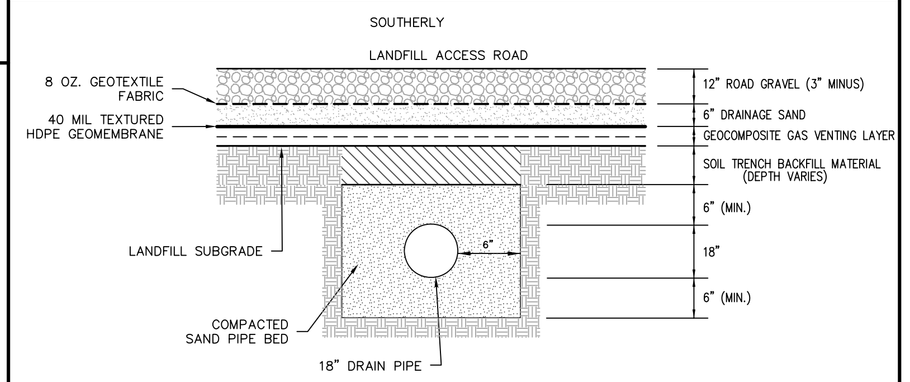

DRAINAGE PIPE TRENCH DETAIL

NOT TO SCALE

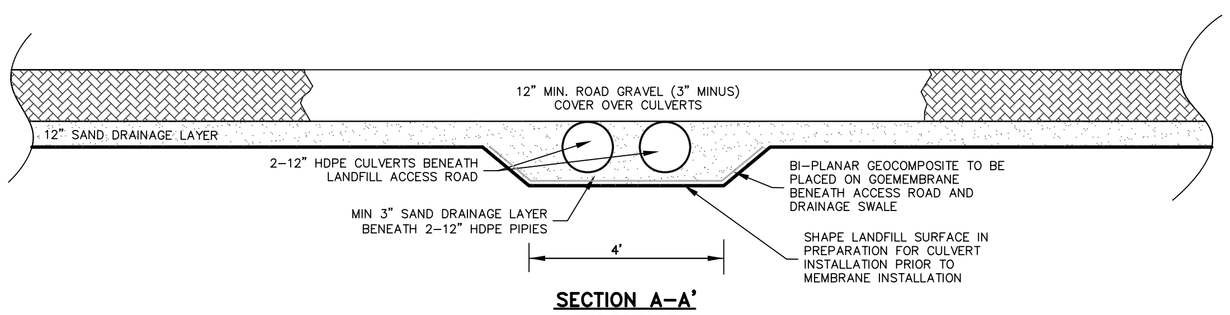

SECTION A-A'

NOT TO SCALE

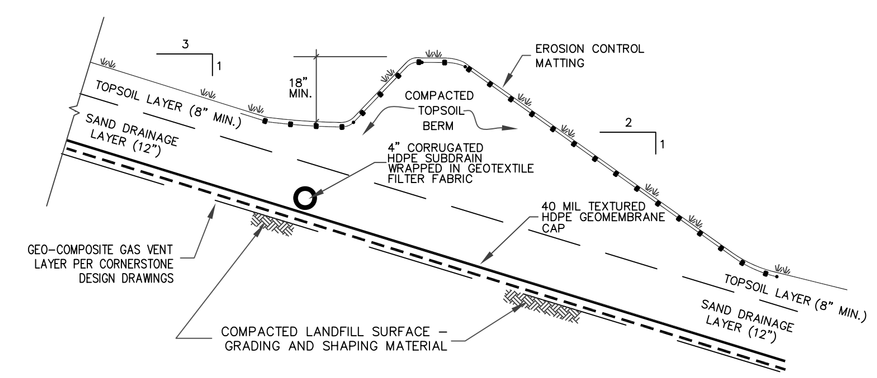

STORM WATER DIVERSION BERM AND SUBDRAIN PIPING

NOT TO SCALE

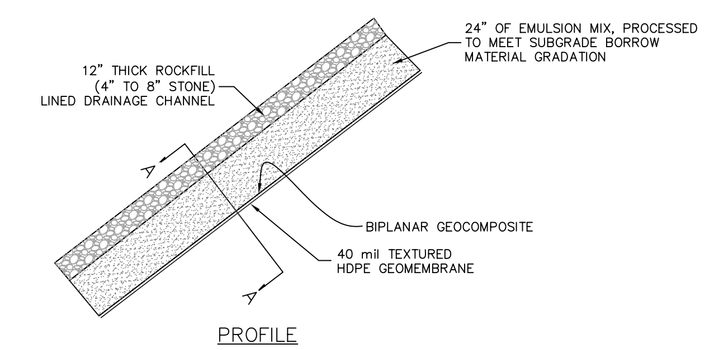

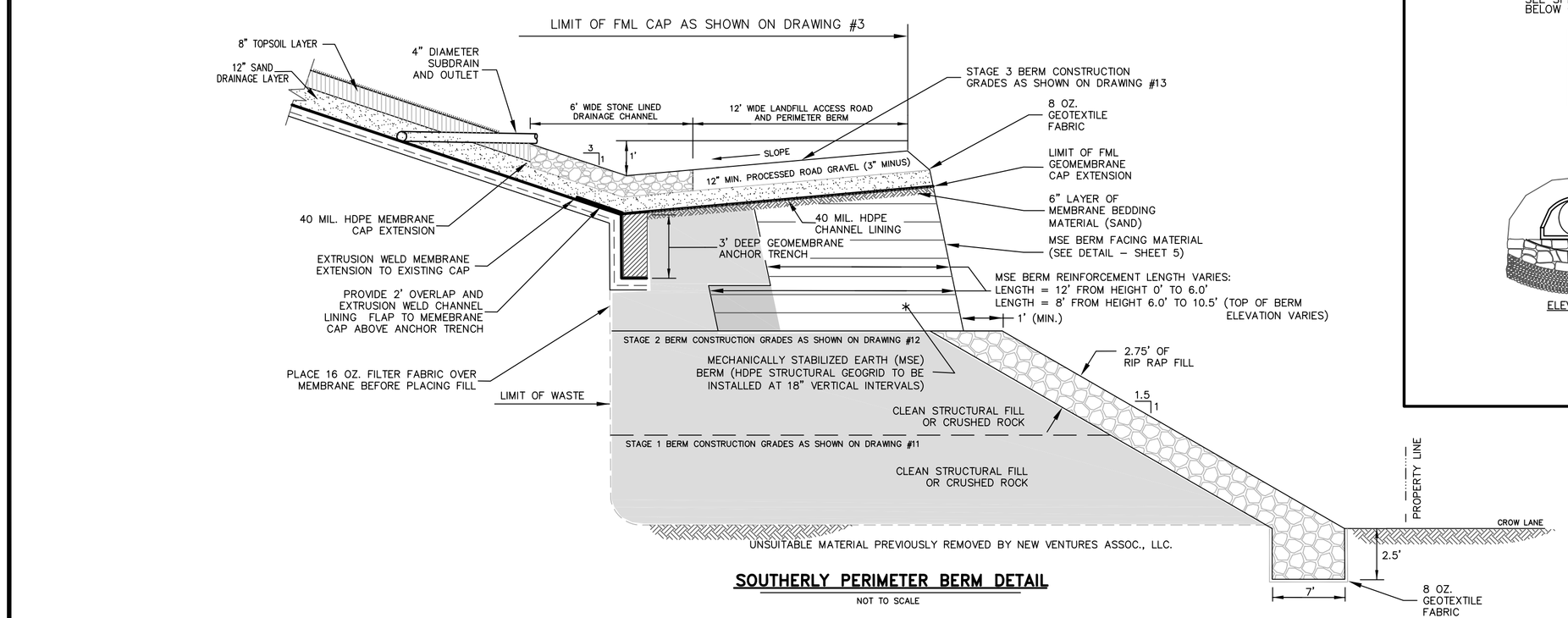

SOUTHERLY PERIMETER BERM DETAIL

NOT TO SCALE

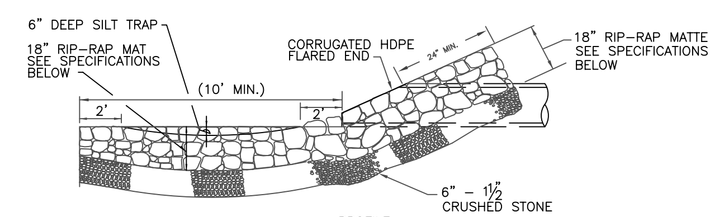

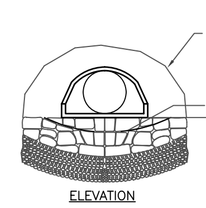

RIP-RAP SPECIFICATIONS

1. THE RIP-RAP SHALL BE COMPRISED OF DURABLE STONE WHICH MEETS THE REQUIREMENTS OF THE COMMONWEALTH OF MASSACHUSETTS STANDARD SPECIFICATIONS FOR HIGHWAYS AND BRIDGES M2.02.3 (STONE FOR PIPE ENDS.)
2. THE RIP-RAP SHALL BE UNDERLAYED WITH A FILTER BLANKET CONSISTING OF 1½" CRUSHED STONE.
3. THE FILTER BLANKET NEED NOT BE COMPACTED, BUT SHALL BE GRADED TO A UNIFORM SURFACE WITH A MINIMUM THICKNESS OF 6".

FLARED END W/RIP-RAP DETAIL

NOT TO SCALE

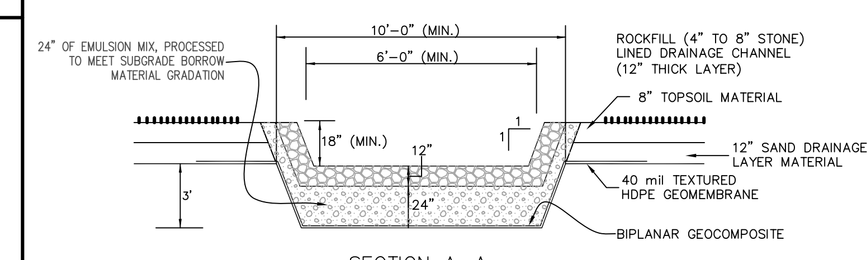

NOTES: EMULSION MIX MATERIAL IS PETROLEUM CONTAMINATED SOILS THAT HAVE BEEN STABILIZED BY A 2% TO 4% ASPHALT EMULSION AND HAVE BEEN GIVEN A BENEFICIAL USE DETERMINATION BY D.E.P.

FINAL COVER LET-DOWN CHANNEL

NOT TO SCALE

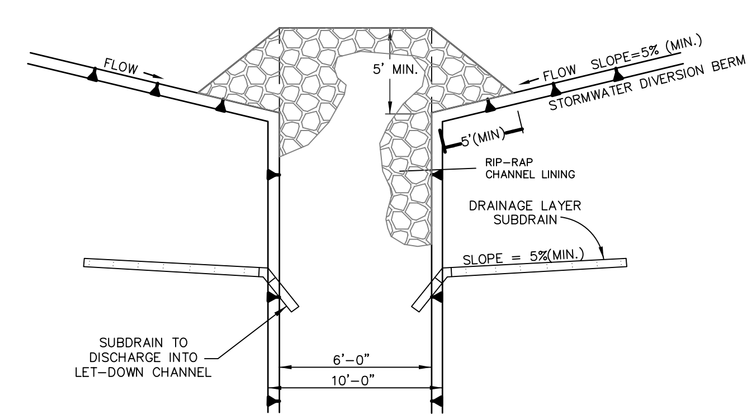

LET-DOWN CHANNEL INLET

NOT TO SCALE

No.	Date	Revision Description	Chkd. by	Appvd. by
1	12/20/06	REVISIONS PER CORNERSTONE DESIGN		
2	1/9/07	REVISED SOUTHERLY PERIMETER BERM DETAIL		
3	2/23/07	REVISED MSE BERM REINFORCEMENT LENGTH		
4	5/9/07	REVISED SOUTHERLY BERM DETAIL		

scale: AS SHWON
date: MAR. 17, 2006
drawn: JAC
checked: MQ
approved: ARQ
drawing number: 6

project: CORRECTIVE ACTION DESIGN
CROW LANE LANDFILL
NEWBURYPORT, MASSACHUSETTS

client: NEW VENTURES ASSOCIATES, L.L.C.

drawing title: FINAL CLOSURE SYSTEM DETAILS AND STORMWATER MANAGEMENT SYSTEM DETAILS 1

SITEC ENVIRONMENTAL
Civil and Environmental Engineering
Land Use Planning and Surveying
Hazardous and Solid Waste Consultants
769 Plain Street, Unit C
Marshfield, MA 02050
PHONE (781) 319-0100
FAX (781) 834-4783

Acad No. NBP CAD DRAIN DET.dwg
File No. SE05-533