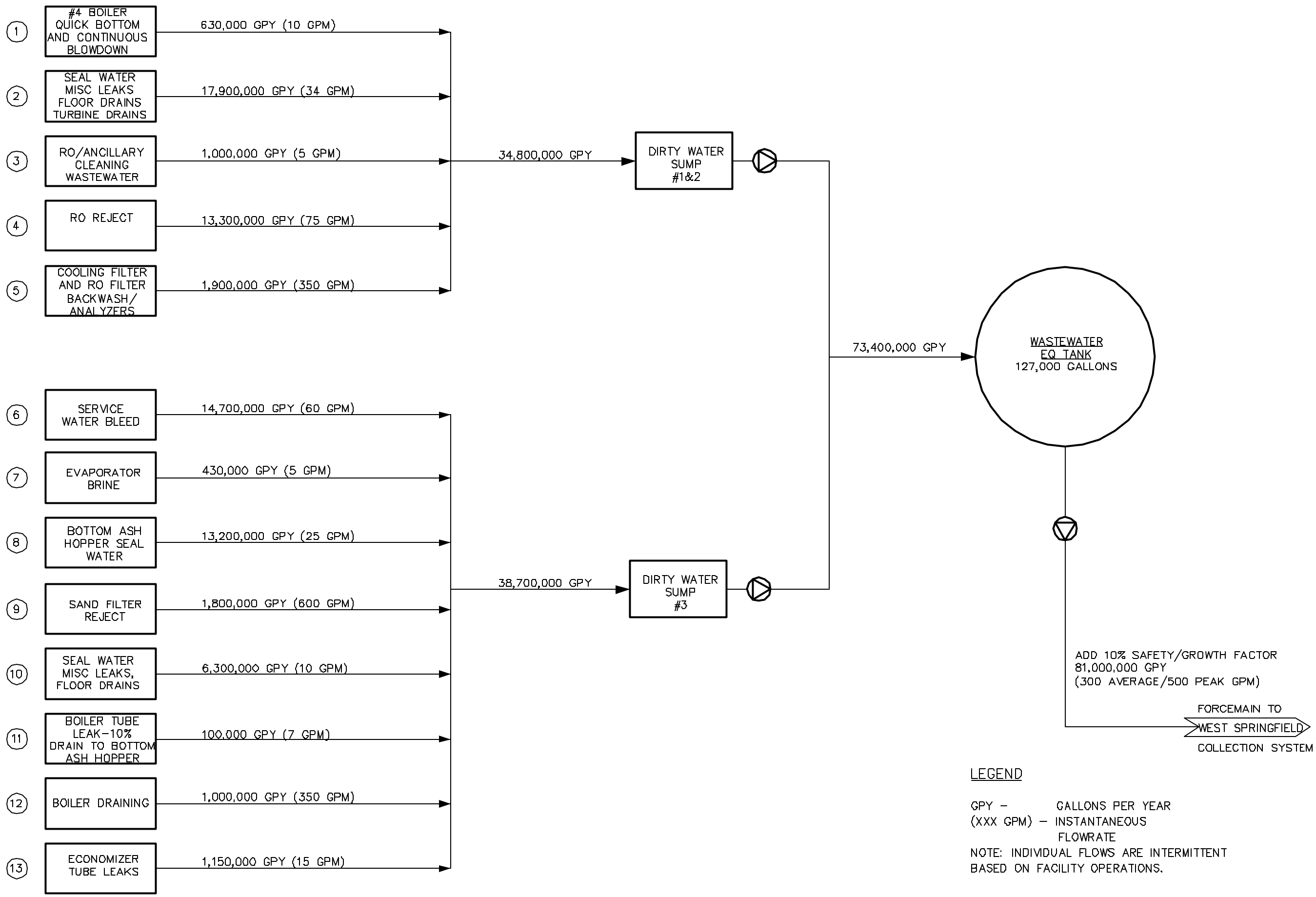

WOODARD & CURRAN
Engineering · Science · Operations
800-426-4262
PORTLAND, ME

PROPOSED WATER BALANCE
BLOCK FLOW DIAGRAM
POTW DISCHARGE

DESIGNED BY: AGB
DRAWN BY: AGB
CHECKED BY: HJV
FILE: 205804.01-FIG1-30

CONSOLIDATED EDISON
GENERATING STATION
WEST SPRINGFIELD, MA.

PRELIMINARY ENGINEERING
WASTEWATER MANAGEMENT
SYSTEM

JOB NO: 205804.01
DATE: MARCH 2002
SCALE: NTS

FIG - 1

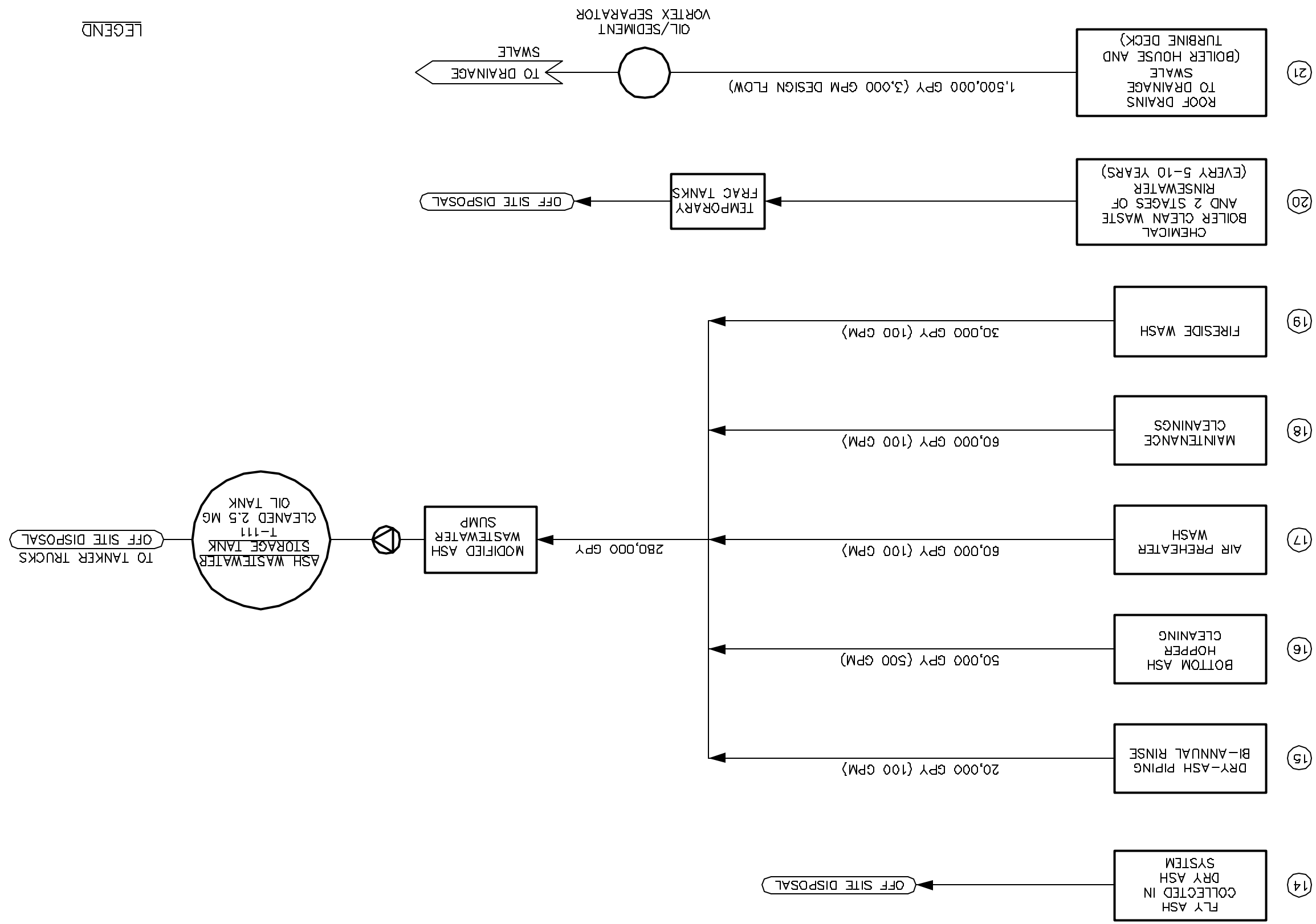

CONSOLIDATED EDISON
GENERATING STATION
WEST SPRINGFIELD, MA.

PRELIMINARY ENGINEERING
WASTEWATER MANAGEMENT
SYSTEM

JOB NO: 205804
DATE: MARCH 2002
SCALE: NTS

FIG - 2

PROPOSED WATER BALANCE BLOCK FLOW DIAGRAM NON-POTW DISCHARGES

DESIGNED BY: AGB
DRAWN BY: AGB
CHECKED BY: HJV
FILE: 205804-FIG2-30

WOODARD & CURRAN
Engineering . Science . Operations
PORTLAND, ME
800-426-4262