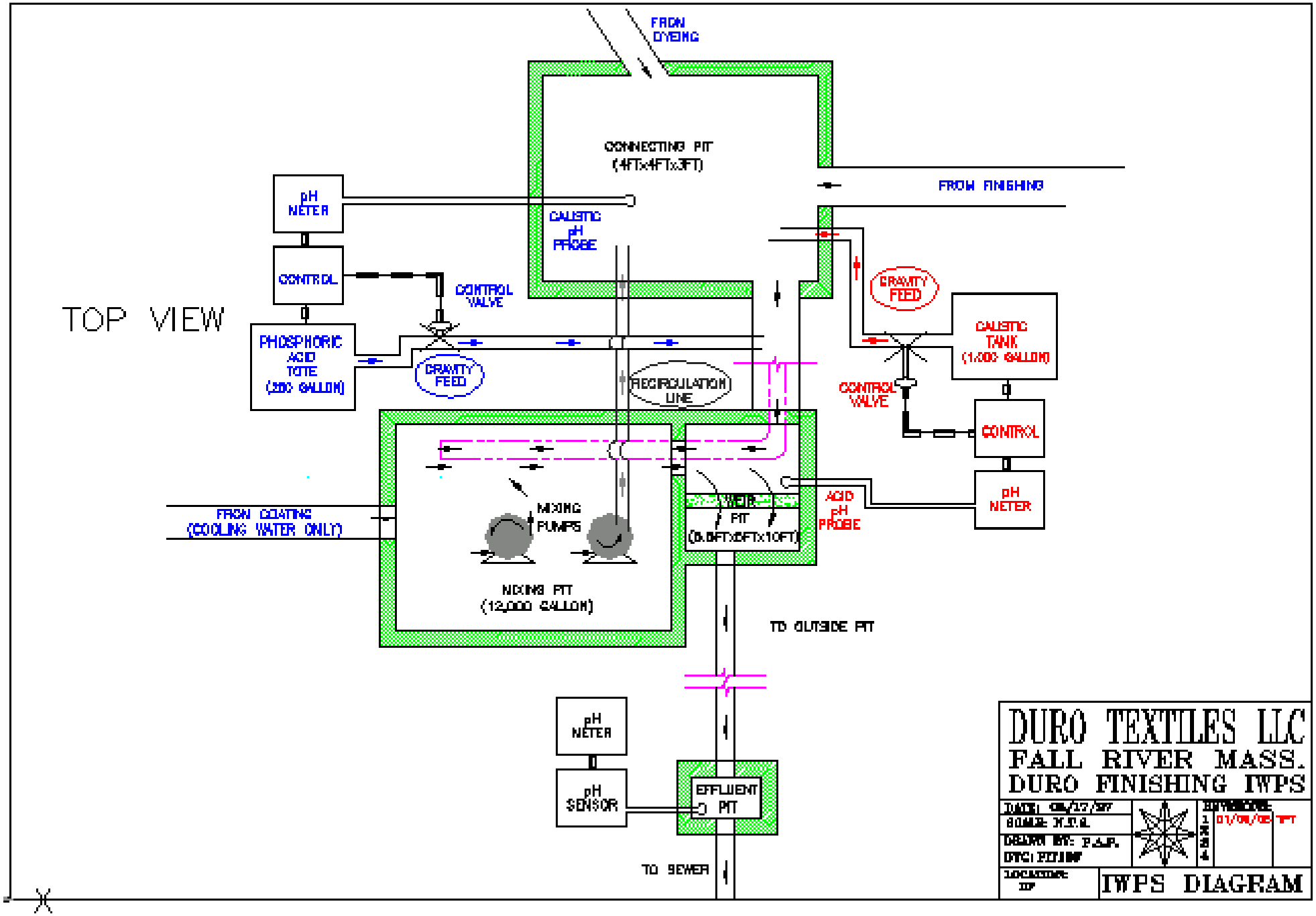

TOP VIEW
FROM DYEING
CONNECTING PIT (4FTx4FTx3FT)
FROM FINISHING
pH METER
CAUSTIC pH PROBE
CONTROL
CONTROL VALVE
PHOSPHORIC ACID TOTE (200 GALLON)
GRAVITY FEED
RECIRCULATION LINE
GRAVITY FEED
CAUSTIC TANK (1,000 GALLON)
CONTROL VALVE
CONTROL
pH METER
ACID pH PROBE
WEIR PIT (6.5FTx5FTx10FT)
MIXING PUMPS
FROM COATING (COOLING WATER ONLY)
MIXING PIT (12,000 GALLON)
TO OUTSIDE PIT
pH METER
pH SENSOR
EFFLUENT PIT
TO SEWER
DURO TEXTILES LLC
FALL RIVER MASS.
DURO FINISHING IWPS
IWPS DIAGRAM