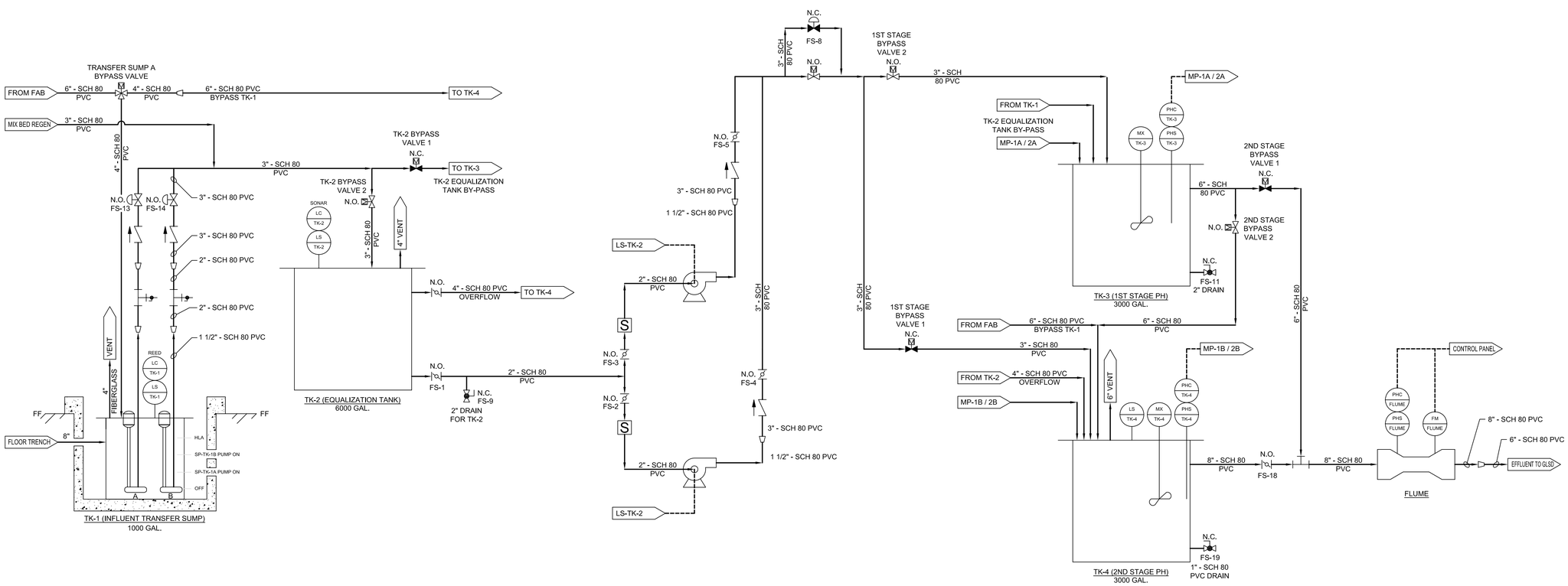

LEGEND

FF	=	FINISHED FLOOR
FM	=	FLOW METER
GAL.	=	GALLONS
HLA	=	HIGH LEVEL ALARM
LC	=	LEVEL CONTROLLER
LS	=	LEVEL SENSOR
MX	=	MIXER
NC	=	NORMALLY CLOSED
NO	=	NORMALLY OPEN
PHC	=	PH CONTROLLER
PHS	=	PH SENSOR
PP	=	POLYPROPYLENE
PVC	=	POLYVINYL CHLORIDE
RAW	=	REGULAR ACID WASTE
SAW	=	SPECIAL ACID WASTE
SS	=	STAINLESS STEEL
	=	BALL VALVE
	=	BUTTERFLY VALVE
	=	DIAPHRAGM VALVE
	=	MOTOR OPERATED VALVE
	=	SAMPLE PORT
	=	INLINE FLOW METER
	=	STRAINER
	=	REDUCER / INCREASER
	=	CENTRIFUGAL PUMP
	=	DIAPHRAGM PUMP
	=	METERING PUMP
	=	SUMP PUMP
	=	SUBMERSIBLE PUMP

EXISTING CONDITIONS
For Reference Purposes

REV.	DESCRIPTION	DRW	CHK	ENG	DATE
B	Existing Conditions	TJL	BMP	WEB	03-12-08
A	Client Review	TJL	BMP	WEB	02-27-08

DRAWING TITLE:
MEC - Process Flow Diagram
Existing Conditions

CLIENT:
Raytheon Integrated Defense

JOB LOCATION:
358 Lowell Street
Andover, MA

NORTH

Information on this drawing is intended to depict existing conditions information for the industrial wastewater pretreatment system (IWPS) at this facility and to demonstrate that the IWPS meets the requirements set forth in 314 CMR 7.05(2)(g)3. Modifications to the IWPS after the signature date shall invalidate this existing conditions plan.

SIGNATURE

Capaccio
Environmental Engineering, Inc.
293 Boston Post Road-West
Marlborough, MA 01752
(508) 970-0033 * www.capaccio.com
"Helping Industry and the Environment Prosper"
© Copyright 2008 Capaccio Environmental Engineering, Inc.

JOB NUMBER: 07-043
SCALE: N.T.S.
SIZE: D
SHEET: D-DP-01

Z:\Raytheon 07-043\A\Record\MEC_REVB.dwg, 3/18/2008 8:23:28 AM

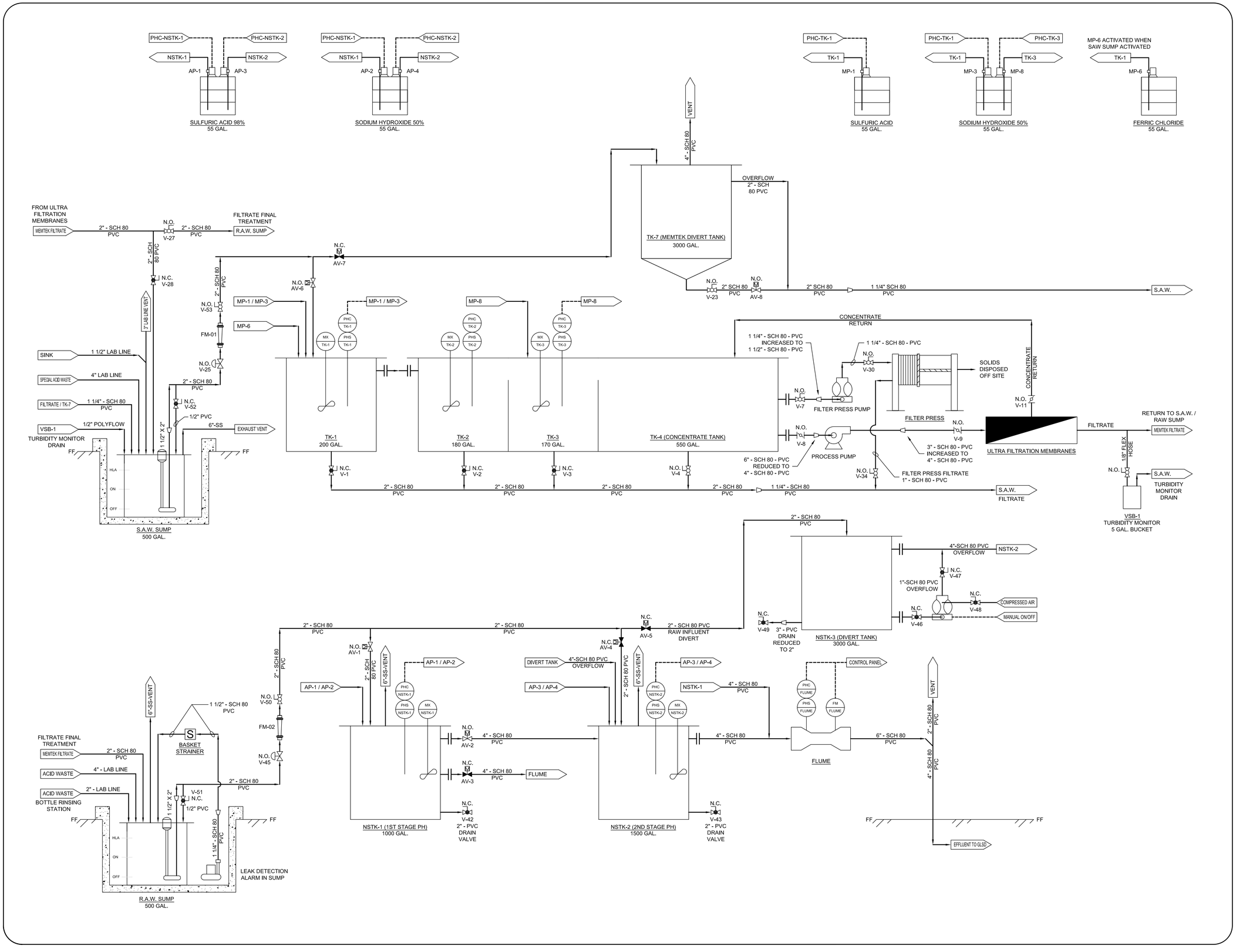

LEGEND

FF	=	FINISHED FLOOR
FM	=	FLOW METER
GAL.	=	GALLONS
HLA	=	HIGH LEVEL ALARM
LC	=	LEVEL CONTROLLER
LS	=	LEVEL SENSOR
MX	=	MIXER
NC	=	NORMALLY CLOSED
NO	=	NORMALLY OPEN
PHC	=	PH CONTROLLER
PHS	=	PH SENSOR
PP	=	POLYPROPYLENE
PVC	=	POLYVINYL CHLORIDE
RAW	=	REGULAR ACID WASTE
SAW	=	SPECIAL ACID WASTE
SS	=	STAINLESS STEEL
	=	BALL VALVE
	=	BUTTERFLY VALVE
	=	DIAPHRAGM VALVE
	=	MOTOR OPERATED VALVE
	=	SAMPLE PORT
	=	INLINE FLOW METER
	=	STRAINER
	=	REDUCER / INCREASER
	=	CENTRIFUGAL PUMP
	=	DIAPHRAGM PUMP
	=	METERING PUMP
	=	SUMP PUMP
	=	SUBMERSIBLE PUMP

EXISTING CONDITIONS
For Reference Purposes

REV.	DESCRIPTION	DRW	CHK	ENG	DATE
B	Existing Conditions	TJL	BMP	WEB	03-12-08
A	Client Review	TJL	BMP	WEB	02-27-08

DRAWING TITLE:
MMIC - Process Flow Diagram
Existing Conditions

CLIENT:
Raytheon Integrated Defense

JOB LOCATION:
362 Lowell Street
Andover, MA

NORTH

Information on this drawing is intended to depict existing conditions information for the industrial wastewater pretreatment system (IWPS) at this facility and to demonstrate that the IWPS meets the requirements set forth in 314 CMR 7.05(2)(g)3. Modifications to the IWPS after the signature date shall invalidate this existing conditions plan.

SIGNATURE

Capaccio Environmental Engineering, Inc.
293 Boston Post Road-West
Marlborough, MA 01752
(508) 970-0033 * www.capaccio.com
"Helping Industry and the Environment Prosper"

© Copyright 2008 Capaccio Environmental Engineering, Inc.

JOB NUMBER: 07-043
SCALE: N.T.S.
SIZE: D
SHEET: D-DP-02

Z:\Raytheon 07-043\A\Record\MMIC_REVB.dwg, 3/18/2008 8:25:47 AM

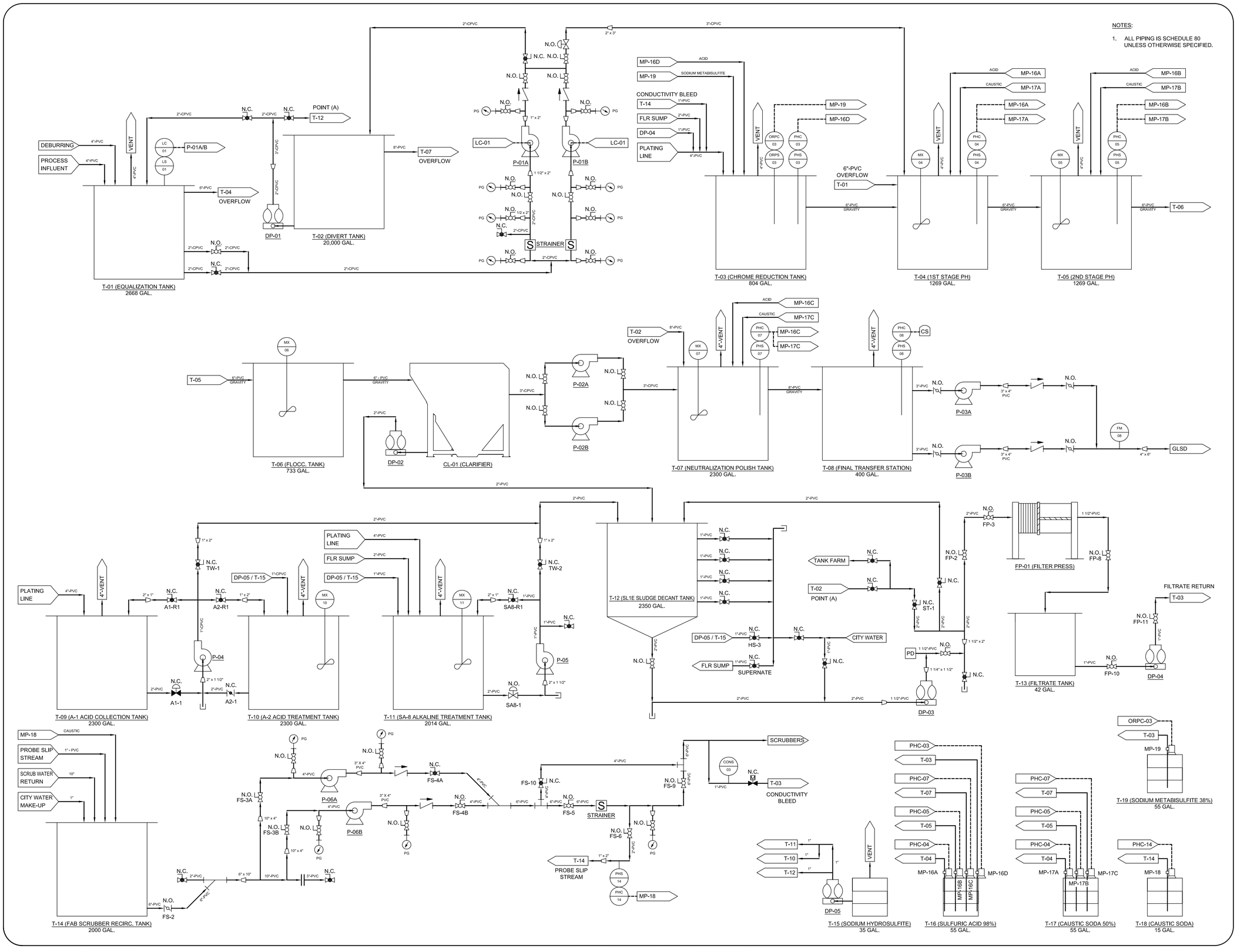

NOTES:

1. ALL PIPING IS SCHEDULE 80 UNLESS OTHERWISE SPECIFIED.

LEGEND

CONS=	=	CONDUCTIVITY SENSOR
CS	=	COMPOSITE SAMPLER
FF	=	FINISHED FLOOR
FM	=	FLOW METER
GAL.	=	GALLONS
HLA	=	HIGH LEVEL ALARM
LC	=	LEVEL CONTROLLER
LS	=	LEVEL SENSOR
MX	=	MIXER
NC	=	NORMALLY CLOSED
NO	=	NORMALLY OPEN
ORPC=		OXIDATION REDUCTION POTENTIAL CONTROLLER
ORPS=		OXIDATION REDUCTION POTENTIAL SENSOR
PD	=	PULSE DAMPENER
PG	=	PRESSURE GAUGE
PHC	=	PH CONTROLLER
PHS	=	PH SENSOR
PP	=	POLYPROPYLENE
PVC	=	POLYVINYL CHLORIDE
RAW	=	REGULAR ACID WASTE
SAW	=	SPECIAL ACID WASTE
S	=	STRAINER
SS	=	STAINLESS STEEL

= BALL VALVE

= BUTTERFLY VALVE

= CHECK VALVE

= DIAPHRAGM VALVE

= MOTOR OPERATED VALVE

= SAMPLE PORT

= PIPE CAP

= PIPE FLANGE

= PIPE REDUCER / INCREASER

= PIPE TEE

= PIPE WYE

= INLINE FLOW METER

= CENTRIFUGAL PUMP

= DIAPHRAGM PUMP

= METERING PUMP

= SUMP PUMP

= SUBMERSIBLE PUMP

PROPOSED CONDITIONS

Not for Construction

REV.	DESCRIPTION	DRW	CHK	ENG	DATE
B	Proposed Conditions	TJL	BMP	WEB	03-12-08
A	Client Review	TJL	BMP	WEB	02-27-08

DRAWING TITLE:

IADC - Process Flow Diagram
Proposed Conditions

CLIENT:

Raytheon Integrated Defense

JOB LOCATION:

350 Lowell Street
Andover, MA

NORTH

Information on this drawing is intended to depict existing conditions information and proposed modifications for the industrial wastewater pretreatment system (IWPS) at this facility and to demonstrate that the IWPS with the proposed modifications meets the requirements set forth in 314 CMR 7.05(2)(g)3. Modifications, other than those proposed to this IWPS, shall invalidate this existing conditions plan.

SIGNATURE

Capaccio Environmental Engineering, Inc.
293 Boston Post Road-West
Marlborough, MA 01752
(508) 970-0033 * www.capaccio.com
"Helping Industry and the Environment Prosper"

© Copyright 2008 Capaccio Environmental Engineering, Inc.

JOB NUMBER: 07-043

SCALE: N.T.S.

SIZE: D

SHEET: D-DP-03

Z:\Raytheon 07-043\Record\IADC_BEVB.dwg, 3/18/2008 8:20:47 AM