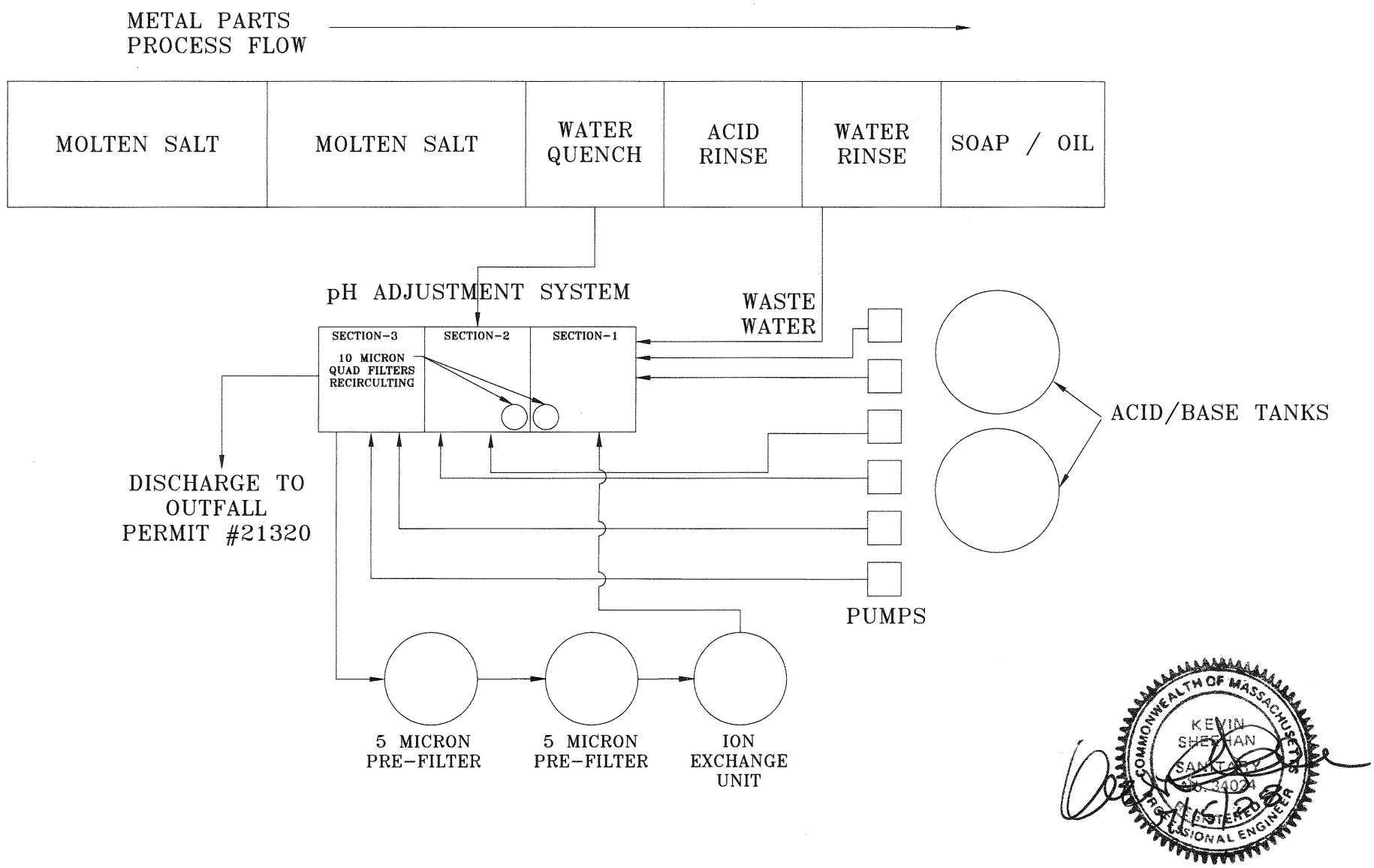

ecs
588 Silver Street * Agawam, MA 01001
Phone: 1-800-789-3530 Fax: 413-789-3530
www.ecsconsult.com

REVISIONS		
No.	Date	Description

PROJECT:
Smith & Wesson
2100 Roosevelt Avenue
Springfield, Massachusetts

TITLE:
MPO-Heat Treating Process

CADFILE: F:\Data\Projects\203703\DWG\DIAGRAMS.dwg

DRAWN BY:	DESIGNED BY:	CHECKED BY:	APPROVED BY:
RSW	AL	AL	AL
SCALE:	DATE:	JOB NO.:	FIGURE NO.:
N.T.S.	June 2008	203703	1

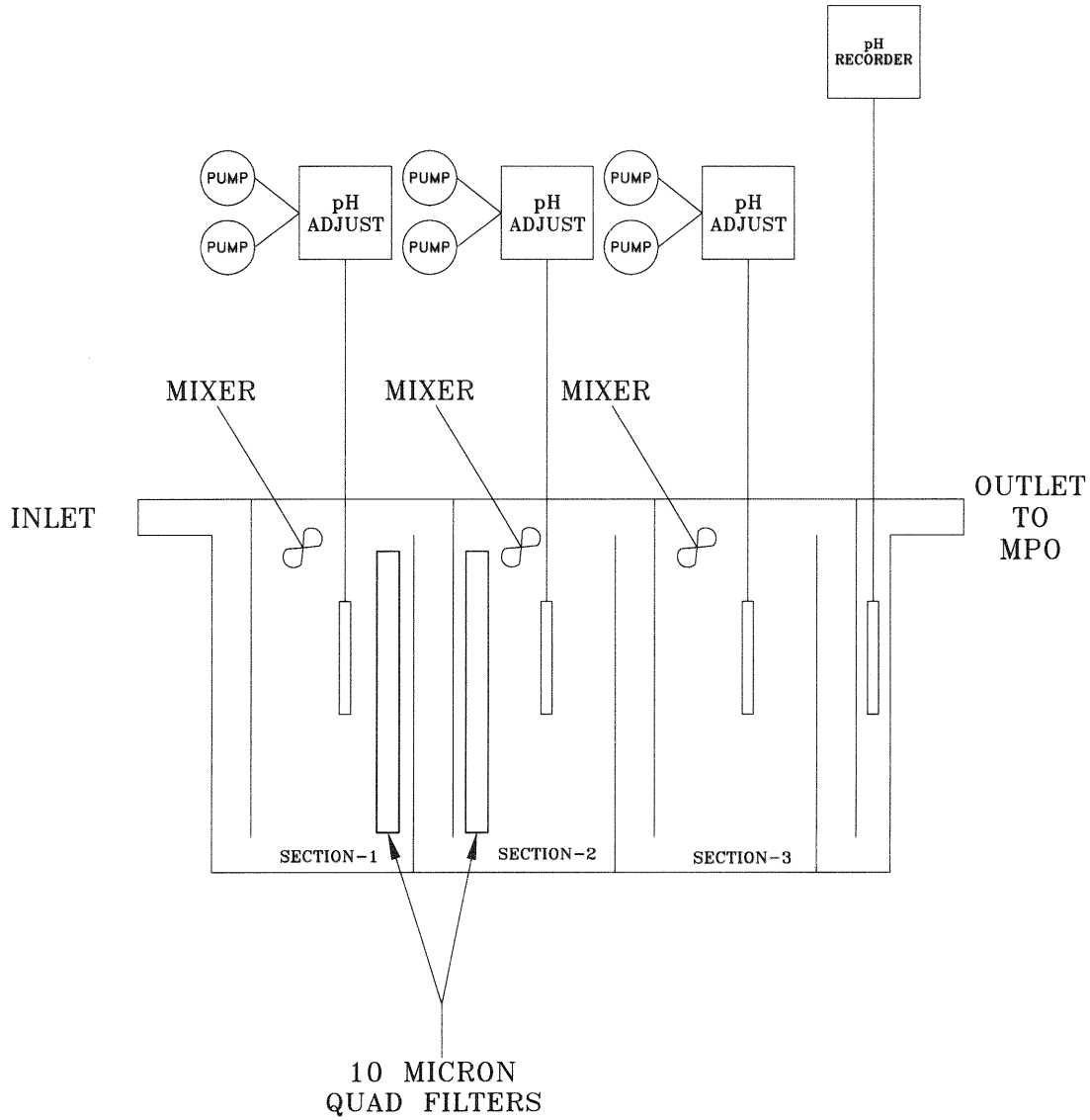

ecs
588 Silver Street * Agawam, MA 01001
Phone: 1-800-789-3530 Fax: 413-789-3530
www.ecsconsult.com

REVISIONS		
No.	Date	Description

PROJECT:
Smith & Wesson
2100 Roosevelt Avenue
Springfield, Massachusetts

TITLE:
MPO Neutralization System

CADFILE: F:\Data\Projects\203703\DWG\DIAGRAMS.dwg

DRAWN BY:	DESIGNED BY:	CHECKED BY:	APPROVED BY:
RSW	AL	AL	AL
SCALE:	DATE:	JOB NO.:	FIGURE NO.:
N.T.S.	June 2008	203703	2

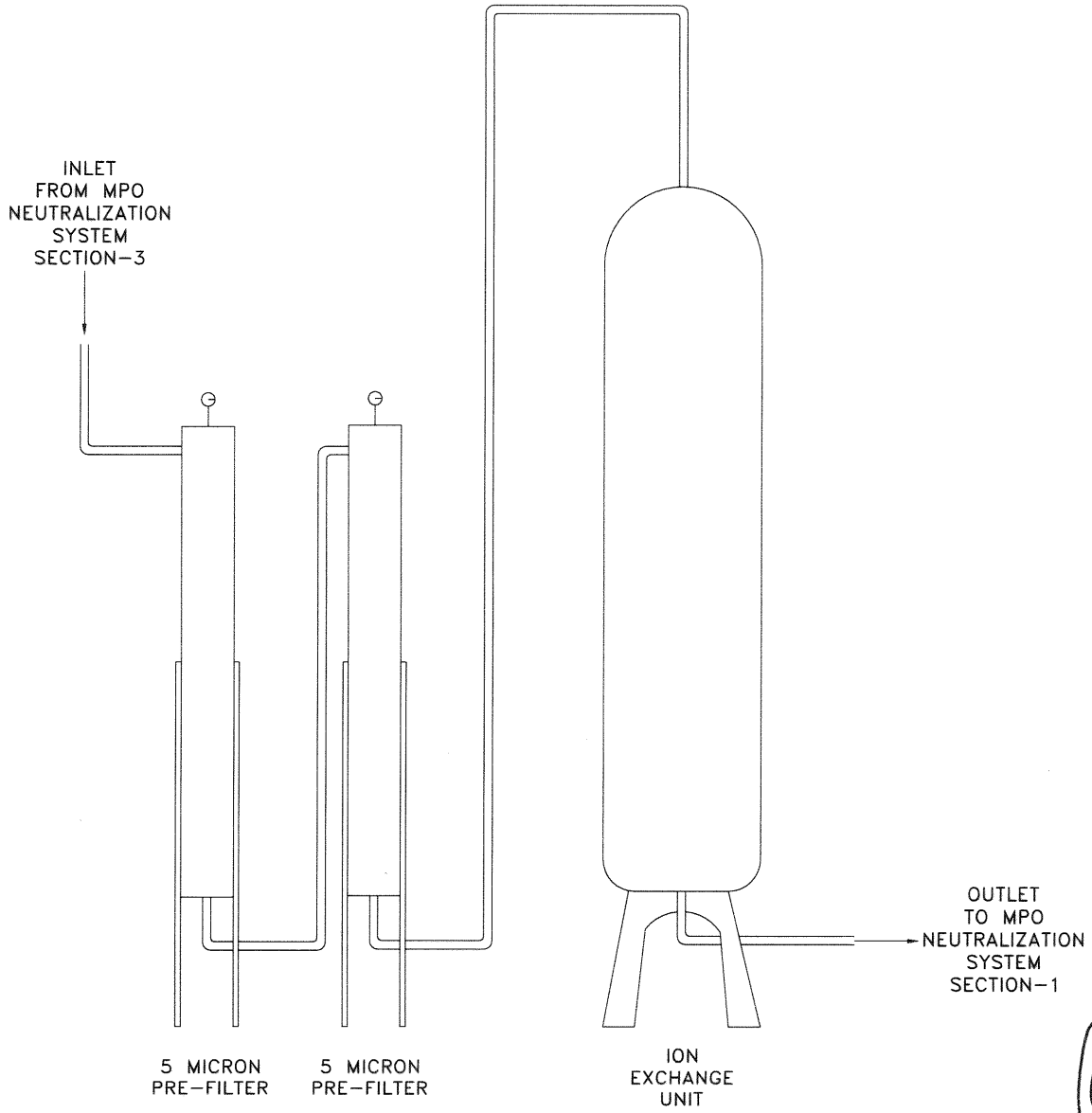

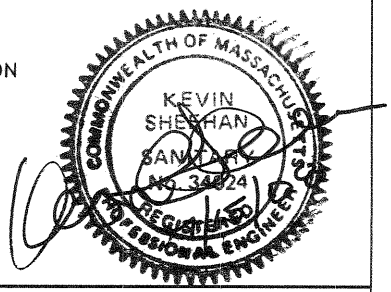

ecs
588 Silver Street * Agawam, MA 01001
Phone: 1-800-789-3530 Fax: 413-789-3530
www.ecsconsult.com

REVISIONS

No.	Date	Description

PROJECT:
Smith & Wesson
2100 Roosevelt Avenue
Springfield, Massachusetts

TITLE:
MPO Filtration/Ion Exchange System

CADFILE: F:\Data\Projects\203703\DWG\DIAGRAMS.dwg

DRAWN BY:	DESIGNED BY:	CHECKED BY:	APPROVED BY:
RSW	AL	AL	AL
SCALE:	DATE:	JOB NO.:	FIGURE NO.:
N.T.S.	June 2008	203703	3

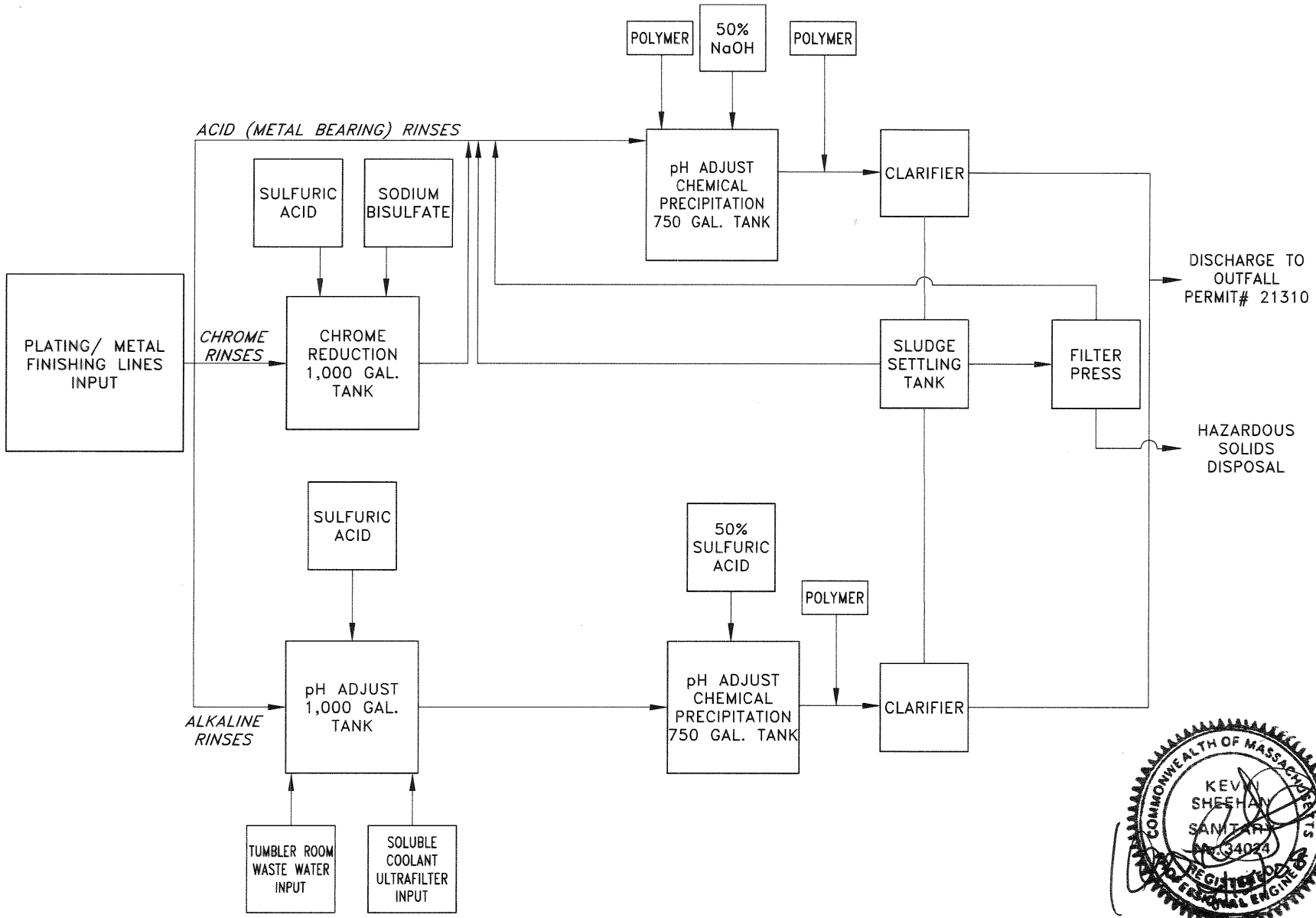

ecs
588 Silver Street * Agawam, MA 01001
Phone: 1-800-789-3530 Fax: 413-789-3530
www.ecsconsult.com

REVISIONS		
No.	Date	Description

PROJECT:

Smith & Wesson
2100 Roosevelt Avenue
Springfield, Massachusetts

TITLE:

Pollution Control Room

CADFILE: F:\Data\Projects\203703\DWG\DIAGRAMS.dwg

DRAWN BY:	DESIGNED BY:	CHECKED BY:	APPROVED BY:
RSW	AL	AL	AL
SCALE:	DATE:	JOB NO.:	FIGURE NO.:
N.T.S.	June 2008	203703	4

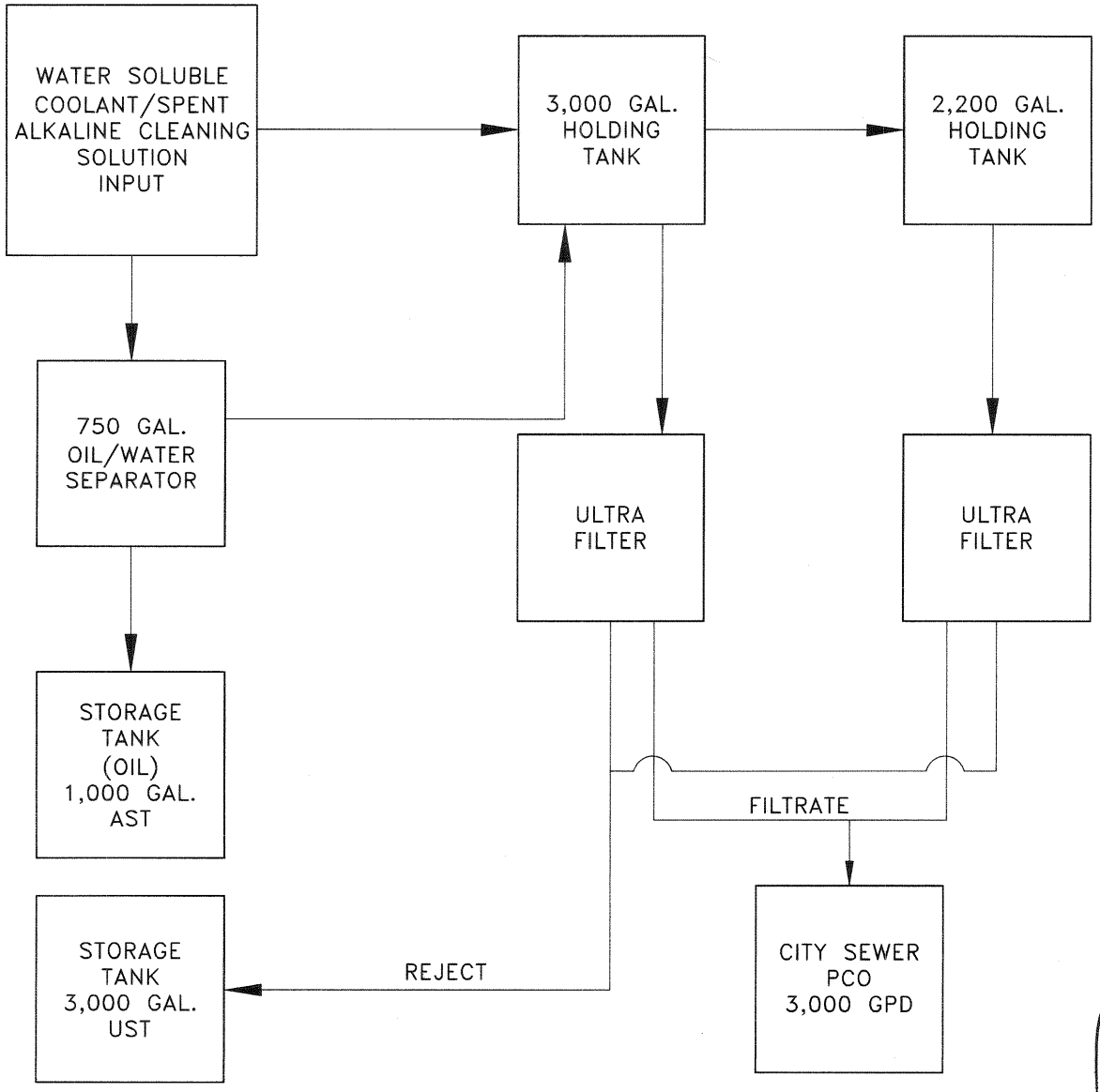

COMMONWEALTH OF MASSACHUSETTS
KEVIN SHEEHAN SANDARS
No. 34024
REGISTERED PROFESSIONAL ENGINEER

ecs
588 Silver Street * Agawam, MA 01001
Phone: 1-800-789-3530 Fax: 413-789-3530
www.ecsconsult.com

REVISIONS		
No.	Date	Description

PROJECT:
Smith & Wesson
2100 Roosevelt Avenue
Springfield, Massachusetts

TITLE:
Water Soluble Coolant Recovery/Oil Separation

CADFILE: F:\Data\Projects\203703\DWG\DIAGRAMS.dwg

DRAWN BY:	DESIGNED BY:	CHECKED BY:	APPROVED BY:
RSW	AL	AL	AL
SCALE:	DATE:	JOB NO.:	FIGURE NO.:
N.T.S.	June 2008	203703	5

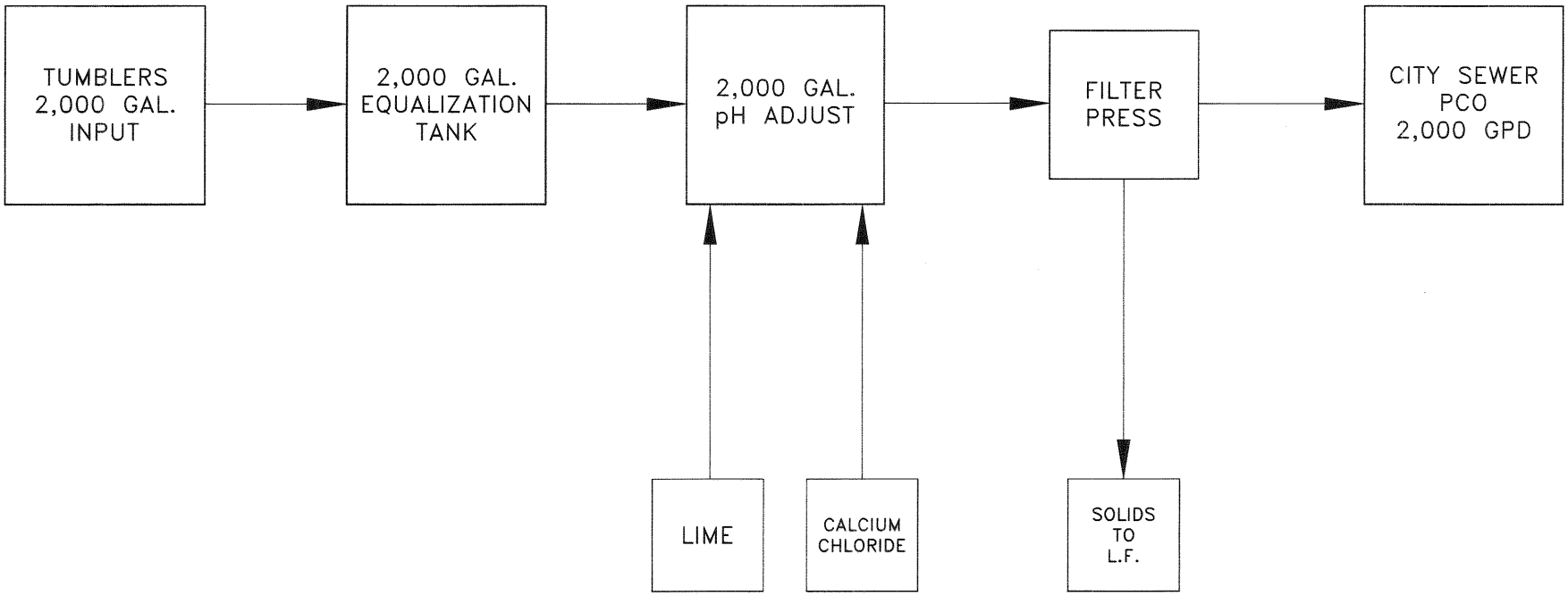

ecs
588 Silver Street * Agawam, MA 01001
Phone: 1-800-789-3530 Fax: 413-789-3530
www.ecsconsult.com

REVISIONS

No.	Date	Description

PROJECT:
Smith & Wesson
2100 Roosevelt Avenue
Springfield, Massachusetts

TITLE:
Tumbler Room Water Discharge

CADFILE: F:\Data\Projects\203703\DWG\DIAGRAMS.dwg

DRAWN BY:	DESIGNED BY:	CHECKED BY:	APPROVED BY:
RSW	AL	AL	AL
SCALE:	DATE:	JOB NO.:	FIGURE NO.:
N.T.S.	June 2008	203703	6