NSTAR

2004 T&D OPERATING STUDY

New Bedford District
Plymouth District
Cape & Vineyard District

Issued: 1 January 2004
NSTAR System Planning

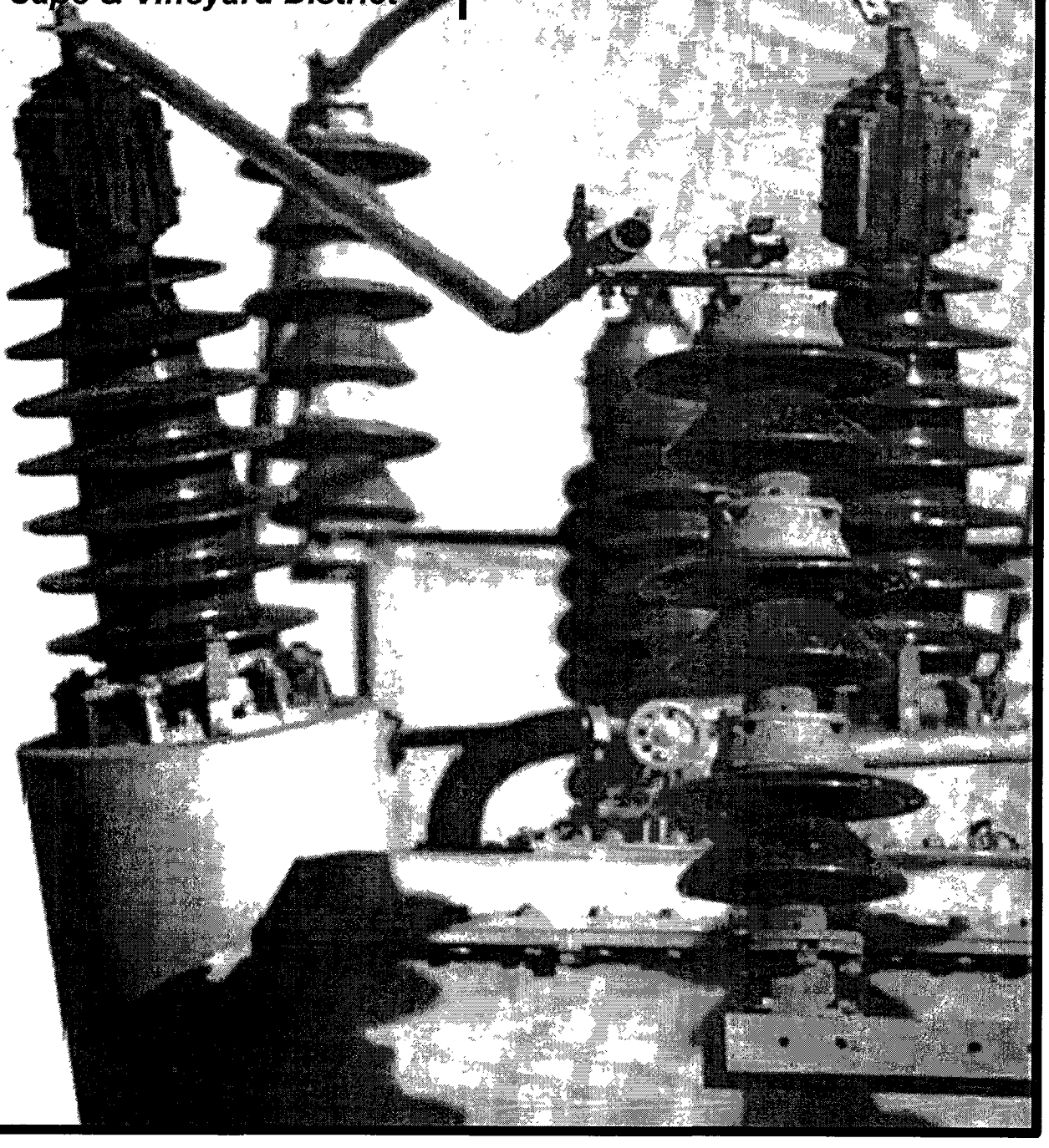

Executive Summary

The overall reliability of NSTAR's transmission and distribution system relies, in part, upon the knowledge of existing and future forecasted system conditions, and the ability to serve customer load during both normal and contingency outage situations under those conditions. The reliability of the "NSTAR/South" (i.e., Commonwealth Electric Company d/b/a NSTAR Electric) T&D system for forecasted 2004 summer conditions is evaluated and presented in this report. This was accomplished by performing power flow simulations of all reasonably foreseeable single-contingency outage conditions for elements comprising the NSTAR/South 345kV and 115kV bulk transmission system, and for the 43 bulk substation transformers and 124 DSS feeders within NSTAR's Cape Cod, New Bedford, and Plymouth Operating Districts. For each contingency event, limiting elements have been identified, and optimum switching plans have been developed for restoring the affected load from an alternate backup source.

The 2004 Transmission & Distribution Operating Study Report has identified the following critical areas of concern at 2004 summer peak loading conditions:

Plymouth District:

- **West Pond Substation #737:** A contingency outage of the Manomet Substation #721 12/16/20 MVA transformer bank will result in an overload of the #13 23kV DSS line beyond LTE rating for 2.9 miles. There is a proposed project to upgrade this line to higher rated conductor. This project was previously deferrable until 2008, but is now required in 2005 due to large customer load additions in the Plymouth area.

- **Manomet Substation #721:** A contingency outage of either 30/40/50 MVA transformer bank at West Pond Substation #737 will result in an overload of the Manomet Substation #721 12/16/20 MVA transformer bank. There is a proposed project to upgrade this station to a 30/40/50 MVA rated transformer. This project was previously deferrable until 2008, but is now required in 2005 due to large customer load additions in the Plymouth area.

- **Rochester Substation #745:** Contingency backup of the Crystal Spring Substation #302 circuit requires protracted 13.2kV distribution switching to avoid overloading the Rochester #114 transformer, rated for 5/6 MVA. There is a spare 10/12 MVA 115/13.2kV stored in New Bedford as a spare for Rochester. While no formal project authorization has been written to do so, replacing the 5/6 MVA unit with the spare 10/12 MVA unit will eliminate this deficiency.

Cape District:

- **Falmouth Substation #933:** A contingency outage a 30/40/50 MVA transformer bank at Falmouth will result in the 23kV bus tie breakers and cables exceeding 49 MVA (1200 Ampere) LTE rating, requiring dispatch of Martha's Vineyard diesel generation. The 23kV bus tie breakers at Falmouth are not in accordance with current OSHA safety codes. There is a proposed project to upgrade the bus tie breakers and cables to 2000 Ampere capability, to address both the thermal and safety violation issues.

- **Martha's Vineyard 23kV Submarine Cables:** In Summer 2004, for a contingency outage of the #97 overhead 23kV DSS line between the Falmouth Substation and the Elm Road switching station, an outage of both the #91 and #97 cables results. In this scenario, the full 13.5 MW of Mirant generation at both Oak Bluffs and W. Tisbury must operate to minimize flow on the remaining #99 cable. Load shedding must be implemented so that total Island load does not exceed firm capability of 38.7 MVA. At the forecasted 46 MW load level for Martha's Vineyard, 7.3 MW of Vineyard load will be at risk. There is a proposed project to install a 2nd 23kV DSS line From Falmouth to Elm Road to alleviate this situation.

- **Otis Substation #915** Starting Summer 2005, a contingency outage of the Hatchville Substation #936 30/40/50 MVA transformer will result in the Otis Substation 16/21/26 MVA transformer exceeding LTE rating. At Summer 2004 forecasted load levels, the loading on the Otis transformer will be 96% of LTE rating. There is a proposed project to upgrade the Otis Substation transformer to 30/40/50 MVA in 2005, and to move the 16/21/26 MVA transformer to Valley Substation #715 in the Plymouth District.

- **Oak Street Substation #920** Starting Summer 2004, contingency backup of either Mashpee Substation #946 or Hyannis Substation #961 will result in overload of the Oak Street #82 DSS line. There is a proposed project to upgrade approximately 1.9 miles of the #82 line from 477 ACSR to 795 ACSR conductor to address the overload.

New Bedford District:

- **Assonet Substation #647:** A contingency outage of the Bell Rock – Assonet #635 34.5kV DSS line, with interruptible load shed and with the transfer of the #605 circuit to Industrial Park Substation #611, will result in 1.9 miles of 1/0 ACSR conductor exceeding LTE rating and voltages in violation of ANSI minima. An upgrade of this section of line to 795 kcmil spacer cable has been deferred.

- **Cross Road Substation #651:** A contingency outage of the Cross Road #109 12/16/20 MVA transformer bank will result in the Cross Road #111 transformer exceeding a 20 MVA limitation caused by a "temporary" interconnection formed by secondary cables running across the ground. There is a proposed project to permanently interconnect the #111 transformer, which replaced a unit which failed during the Summer of 2002, with a more permanent interconnection fully rated to the size of the transformer. The Cross Road #111 transformer is the former Waltham #110A transformer; available fault duty at Cross Road with this unit installed there is well over 10,000 Amperes due to low nameplate impedance of this transformer.

- **Fisher Road Substation #657:** A contingency outage of either transformer bank at Cross Road Substation #651, or contingency backup of the Cross Road #531 13.2kV DSS line, requires over twenty (20) 13.2kV distribution switching operations in order to be able to use the 2nd transformer at Fisher Road substation, which is normally energized but does not carry load. There is a proposed project to install a 13.2kV bus tie breaker at Fisher Road to permit normal use of this transformer, and greatly reduce the number of switching operations to back up adjacent substations and circuits.

- **Arsene Street Substation #654:** A contingency outage of the Arsene Street

Substation #654 21/28/35 MVA transformer, with subsequent load transfers to Wing Lane Substation #624, will result in distribution voltages less than ANSI minima. The installation of capacitor banks on the 13.2kV system would resolve this situation.

345/115kV Transmission System:

- **L/O #109 115kV Line:** A contingency outage of the #109 High Hill–Cross Road-Fisher Road 115kV transmission line in the Western area of the New Bedford District causes a forced outage of three (3) substation transformer banks (two at Fisher Road Substation #657, one at Cross Road Substation #651), and would require load shedding at both Summer and Winter peak and shoulder-peak conditions. The installation of two (2) 115kV SCADA-controlled, motor-operated switches on the #109 and #111 115kV lines entering Cross Road would permit the affected Cross Road bank to be switched over to the remaining in-service line. These switches have been purchased, but installation appears to have been deferred.

- **L/O #107 115kV Line:** A contingency outage of the #107 Bourne-Otis 115kV transmission line in the Upper Cape area will result in transmission system voltages being below 0.95 per unit in the vicinity of Falmouth and Otis Substations, with voltages at 1.0 per unit at the Otis Substation 23kV bus. Load transfers from Otis to Sandwich and Hatchville may be required.

- **L/O #116 115kV Line:** A contingency outage of the #116 Carver-Brook Street 115kV line in the Northern area of the Plymouth District places all of the Northern portion of the District on the #191 Auburn Street-Kingston 115kV line. This line has a 142 MVA LTE rating due to 336 ACSR conductor. Post-contingency, the line will be loaded to 4% beyond 142 MVA LTE rating will low voltages on the 115kV system serving the West Pond, Kingston, Duxbury, and Marshfield Substations. The minor overload can be mitigated by transferring 23kV load from West Pond Substation #737 to Tremont Substation #713 and Manomet Substation #721. Upgrade of the #191 line to 795 ACSR conductor can be deferred to Summer 2006.

- **Overload of #117 Line Due to Holbrook #102 345kV Stuck Breaker:** While not caused by a contingency condition within the NSTAR/South system, a stuck 345kV breaker #102 at Holbrook S/S #478 results in the forced outage of a 345kV line and two (2) 345/115kV autotransformers (one at Holbrook, one at Auburn Street). This results in a shift of power flow from the NSTAR/South system such that the 115kV system in the Plymouth District picks up National Grid (Mass. Electric Co.) load through the #117 Brook Street-Kingston 115kV line, exceeding 142 MVA for 336 ACSR conductor. Upgrade of the #117 line to 795 ACSR conductor can be deferred to Summer 2006, and is being studied in comparison to other upgrades, such as doubling-up the Holbrook 345kV breaker that is the causative event.

- **Loss of #125 115kV Line:** A contingency outage of the #125 115kV line to Wellfleet Substation #976 on the Lower Cape requires protracted 23kV load transfers to Orleans Substation #975. At Summer 2004 load levels, approximately 6 MVA of load is at risk for 174 hours. The installation of a SCADA-controlled 115kV switch at the end of the #125 line at Wellfleet will improve switching during load transfers. Due to the low amount of load at risk for a short period of time, system upgrades to improve firm supply to Wellfleet Substation #976 are currently under review, but deferrable.

Table of Contents

PAGE

Introduction ---------- 1

Substation Load Forecast ---------- 2

Equipment Ratings and Limits ---------- 11

Available Short Circuit Duties ---------- 34

Summary of Results and Recommendations ---------- 42

New Bedford District
Bulk Substation Transformer / DSS Outages ---------- 54

Plymouth District
Bulk Substation Transformer / DSS Outages ---------- 138

Cape & Vineyard District
Bulk Substation Transformer / DSS Outages ---------- 204

Martha's Vineyard 23kV Submarine Cable Outages ---------- 287

345/115kV Transmission System
Bulk Transmission Facility Outages ---------- 309

Introduction

The ***2004 T&D Operating Study*** documents the results of a contingency power flow analysis of possible transmission and distribution supply facility outages within NSTAR's New Bedford, Plymouth, and Cape Districts, including bulk substation transformers, 345kV and 115kV transmission lines, and 23kV and 13.2kV distribution supply system (DSS) feeders. The purpose of this study was three-fold:

1. To determine and optimize switching procedures for contingency backup of bulk substations and DSS lines.

2. To pinpoint potential problem areas, where transformer and line rating violations and voltage problems are expected to occur during either normal operating conditions or under contingency outage conditions.

3. To identify "limiting element" facilities and equipment that constrain the ability to transfer station and circuit loads under contingency outage conditions.

NSTAR / South, formerly Commonwealth Electric Company, maintains detailed system models of its bulk supply facilities using power flow analysis software called PSS/E (Power System Simulator for Engineering). PSS/E, developed by Power Technologies, Incorporated (PTI), is a system of programs and structured data files designed to handle the basic functions of power system performance simulation work, namely: data handling, updating, and manipulation; power flow; fault analysis; dynamic simulation; and equivalent construction. The extent of the modeled system in this software includes all 345kV and 115kV transmission facilities, all bulk distribution substations, and the "backbone" of all 23kV and 13.2kV DSS tie lines that intertie all bulk distribution substations. Non-DSS 23kV and 13.2kV distribution circuits and the 4kV distribution systems are not modeled in this software and accordingly were not covered in the analysis.

The use of these models, in conjunction with the NSTAR's substation load forecast, allows System Planning to predict bulk supply system performance for future loading conditions. The analysis conducted herein was for forecasted 2004 NSTAR / South Summer peak load levels.

In this analysis, provision was made for various proposed projects, which will be completed either by June 1st, 2004, or by various due dates throughout the Summer. The contingency and switching analysis were conducted "with" and "without" the proposed projects so that system performance, remedial switching actions, and system limits could be known for either condition.

Substation Load Forecast

Demand Forecast

The Company's sub-station demand forecasts are based upon ISO's long-term peak forecasts of New England states from 2003 to 2012. These forecasts were completed in March 2003 and approved by its board of directors in November 2003. The forecasting process incorporates input from the NEPOOL load Forecasting committee and the NEPOOL Transmission Expansion Advisory Committee. Details of forecasts are documented in ISO's Technical Report RTEP03 dated November 13, 2003. ISO develops two sets of forecasts, reference case and an extreme weather case. Using ISO's extreme weather scenario peak load forecasts, NSTAR uses the ABB model to develop sub-station load forecasts for Boston Edison and Cambridge Electric companies and utilizes in-house developed regression equations to develop sub-station forecasts for Commonwealth Electric.

ISO's Peak Load Forecast Methodology

ISO's long term peak load forecasts (2003-20012) are based upon long term energy forecasts, last year short run forecast of load factor and the weather assumptions for normal and extreme weather scenarios

Long term energy forecasts are based upon regression models relating energy per household (1980-2002) to real income per household, real price in cents/kWh, annual heating and cooling degree-days, and an ARMA model for the residual process. Short run forecasts of peaks are based upon annual regressions of daily peak data (1992-2002) against weather conditions at the time of the peak and base-load energy. For normal weather scenario, a weighted temperature-humidity index of 80.1 (temperature = 90.4, humidity = 68) is assumed. This is the 95th percentile of the weekly weather distributions for the 3rd week in July when the summer peak is normally expected to occur and is consistent with the average of the last 30 years of the summer peak WTHI. For extreme weather scenario, a WTHI index of 82 (temperature = 94.2, humidity = 70) is assumed. A WTHI value higher than 82 has a 10 % chance of happening. Details of the methodology (Chapter 2) and forecasts (Table 2.1) can be found in ISO's RTEP03 Technical Report published on November 13, 2003. From 1990 to 2002, The NEPOOL control area summer peak grew at approximately 2% per year and is forecasted to grow by 1.5 % per year from 2003 to 2012.

Historical and forecasts of the economic/demographic drivers are obtained from Economy.com, a leading provider of economic, financial and industry data to a wide variety of clients including commercial and investment banks, insurance, financial and mutual fund companies; federal, state and local governments; industrial and manufacturing companies; and utilities.

Company wise Peak Load Forecasts

Since the weather conditions during the summer of 2002 is very close to extreme weather, Operating companies' 2002 actual summer peak load information is used to estimate each companies share of the ISO's coincident peak load and then these percentages are applied across ISO's extreme summer peak forecasts from 2003 –2012. Peak load forecasts for 2013 are obtained by applying prior year growth rate.

Substation Load Forecast

NSTAR uses the ABB spatial model to allocate each company's peak load into substation peak load. With input from NSTAR's Account Execs and Lead Engineers, the ABB model has been developed and calibrated specific to NSTAR's service territories. By segmented a territory into small areas of discernable load development parcels and incorporating land use and zoning information and any significant development plan in each area, the ABB model distributes a company's peak load forecast by sub-stations based upon each substation's historical relationship to company peak and future land use of the sub-station territory. This approach has been applied to the load served by Boston Edison and Cambridge Electric Company.

For Commonwealth Electric Company, NSTASR and ABB are currently working on developing a similar model that will allow employing similar area spatial and load projection techniques. In the absence of the completion of this model, sub station forecasts for Commonwealth Electric's territory are based on detailed multi-factor regression equations developed for each sub station. While this methodology is a viable alternative, it does not capture future load pocket development as well as forward looking spatial land use approach as the ABB model does.

NSTAR "EXTREME WEATHER" LOAD FORECAST

[illegible]

CALCULATED FROM ISO-NE ICS SUMMER EXTREME WEATHER FORECAST
USING PERCENTAGE CONTRIBUTIONS OF NSTAR COMPANIES AT 2002 SUMMER PEAK

		NEPOOL FORECAST BY DAVE ERHLICH					NSTAR COMPANY/DISTRICT FORECASTS, COINCIDENT WITH NEPOOL							NON-COINCIDENT DISTRICT PEAKS APPLICABLE NEPOOL PEAK		
	YEAR	BASE 75%		EXTREME 25%			SUMMER EXTREME WEATHER NEPOOL FORECAST							2001	2002	2003
							NSTAR COMPANIES COINCIDENT WITH ISO-NE SYSTEM PEAK							PWLE	BWLE	TCLE
		summer 50/50	winter 50/50	summer 10/50	winter 10/50	percentage growth	NSTAR 2001	BECO 2001	BELCO 2001	COMM. 2001	CAPE 2001	PLT 2001	WEB 2001	CAPE 2001	PLT 2001	WEB 2001
% Contribution @ Peak ->							1.72%	2.35%	1.40%	3.35%	1.35%	0.55%	0.55%	2.72%	0.55%	1.32%
ACTUALS	2002			2489			485	2326	552	529	438	270	340	452	275	334
2001 ISO-NE 14:00	2003	2521	2730	2753	2801	5.04%	479	2347	575	536	430	230	355	475	333	327
	2004	2530	2771	2780	2897	2.34%	479	2352	583	538	437	236	330	483	337	334
	2005	2596	2826	2770	2995	1.21%	497	2365	588	570	436	238	324	492	334	337
	2006	2602	2874	2829	2986	1.76%	493	2376	592	572	447	237	327	497	337	337
	2007	2622	2873	2884	2997	1.25%	496	2392	597	583	447	234	340	504	340	334
	2008	2690	2907	2977	3142	1.38%	505	2412	603	597	452	237	324	511	345	333
	2009	2793	2971	3006	3022	1.49%	510	2435	609	602	457	241	328	516	347	333
	2010	2818	2984	3057	3105	1.56%	520	2456	615	608	459	244	332	523	357	337
	2011	2866	3046	3131	3205	1.60%	523	2477	622	615	467	248	337	533	354	342
	2012	2910	3073	3202	3266	1.56%	536	2498	628	627	476	252	337	542	355	347
Calculated Peak	2013	increase	increase	3280	increase	1.56%	540	2519	635	638	503	256	336	552	362	352
[illegible]				10 YR [illegible]		1.47%										
[illegible]				5 YR [illegible]		1.33%										

[illegible]

NSTAR "BASE" LOAD FORECAST

CALCULATED FROM ISO-NE 10% SUMMER EXTREME WEATHER FORECAST
USING PERCENTAGE CONTRIBUTIONS OF NSTAR COMPANIES AT 2002 SUMMER PEAK

		NEPOOL FORECAST BY DAVE EHRLICH					NSTAR COMPANY/DISTRICT FORECASTS, COINCIDENT WITH NEPOOL							NON-COINCIDENT DISTRICT PEAKS		
							SUMMER NORMAL WEATHER (CALC. FROM COLUMN "B")							APPLICABLE NEPOOL PEAK		
														19888	23848	22937
							NSTAR COMPANIES COINCIDENT WITH ISO-NE (8/14/02 14:00)							7/4/13	7/4/15	7/30/15
	YEAR	BASE (B)		EXTREME (A)			NSTAR COINC	EECO COINC	CELCO COINC	COMM. COINC	CAPE* COINC	PLY COINC	NEE COINC	CAPE* NCINC	PLY NCINC	NEE NCINC
		summer 50th%	winter 50th%	summer 10th%	winter 10th%	percentage growth	17.60%	12.30%	1.40%	3.60%	1.33%	1.63%	0.95%	2.17%	0.35%	1.33%
Projections	2002	23315		25489			4209	3086	335	337	402	157	226	424	203	243
	2003	25121	22722	26766	22601	5.04%	4421	3241	352	379	423	227	239	446	213	231
	2004	25330	22811	27380	22897	2.34%	4521	3314	360	333	432	232	244	456	218	237
	2005	25936	22922	27710	23196	1.21%	4575	3353	364	310	437	234	247	462	221	270
	2006	26232	22974	28029	23486	1.15%	4627	3392	333	322	442	237	250	467	223	273
	2007	26522	22973	28384	23797	1.27%	4685	3434	373	332	448	239	255	473	226	275
	2008	26830	23227	28777	24144	1.33%	4730	3482	373	345	454	222	257	480	229	280
	2009	27333	23571	29308	24522	1.49%	4821	3534	384	355	461	222	261	487	233	284
	2010	27813	23841	29867	24905	1.55%	4896	3589	389	374	468	222	266	494	236	289
	2011	28355	24343	30431	25325	1.80%	4975	3646	395	333	475	222	269	502	240	293
	2012	28713	24773	30802	25766	1.55%	5053	3704	402	225	483	222	273	510	244	298
Calculated Year >	*2013	29159	no value	31260	no value	1.55%	5132	3761	408	221	490	242	277	518	248	303
				10 YR CAGR (2012)		1.47%										
				5 YR CAGR (2002)		1.33%										

*NO VALIDATION

* Year 2013 not provided by ISO-NE. Load calculated using % Growth from Prior Year

Times and Values for Coincident and Non-Coincident Peaks by Company

	COINCIDENT		NON-COINCIDENT	
ISO-NE	25489	8/14/02 14		
NSTAR	4421	8/14/02 14	4560	8/14/02 15
EECO	3225	8/14/02 14	3311	8/14/02 15
CELCO *	352	8/14/02 14	353	8/14/02 15
COMM	333	8/14/02 14	SAME	

* An 18-hour string non-coincident CELCO peaks of up to 445 MW observed on 11/7/02 17:00 have been dismissed as being erroneous

Notes on Base Load Calculation Assumptions

1. It was assumed that 25,489 MW ISO-NE peak on 8/14/02 was extreme weather "Col A"
2. Estimated "normal weather" peak of 23,848 was estimated by taking Dave's ratio for 2003 of 25,489/25,121 times 23,489 (2
3. NSTAR Company base load peaks were estimated using the same percentage allocations in 2nd table, but based on the
4. 2012 load ratio to ISO was assumed the same load growth from 2011-2012 and calculated a value
5. Cape/Plymouth/New England non-coincident "base" peaks calculated by ratioing "extreme" peaks observed in 2002 by same ratio from step 2

2003 SUBSTATION FORECAST
DISTRICTS: SUMMER EXTREME WEATHER

YEAR	COMMWLTH SUMMER EXTREME WEATHER PEAK (MW)	G.R.	NEW BEDFORD NON-CONC EXTREME WEATHER PEAK (MW)	G.R.	CAPE NON-CONC EXTREME WEATHER PEAK (MW)	G.R.	PLYMOUTH NON-CONC EXTREME WEATHER PEAK (MW)	G.R.	COMMWLTH EXTREME WEATHER (SUM OF DISTRICTS)	G.R.
2002	899		255		441		206		902	
2003	933	4.1%	275	8.0%	459	4.2%	216	4.7%	951	5.4%
2004	958	2.4%	285	3.6%	471	2.5%	225	4.6%	982	3.3%
2005	970	1.3%	289	1.2%	477	1.2%	234	3.5%	999	1.8%
2006	981	1.1%	292	1.1%	482	1.1%	241	3.0%	1015	1.6%
2007	993	1.2%	295	1.2%	488	1.2%	247	2.4%	1030	1.5%
2008	1007	1.4%	299	1.3%	495	1.4%	253	2.4%	1047	1.6%
2009	1022	1.5%	303	1.4%	502	1.5%	260	2.9%	1066	1.8%
2010	1038	1.6%	308	1.5%	510	1.6%	265	1.9%	1083	1.6%
2011	1055	1.6%	313	1.6%	518	1.6%	270	1.9%	1101	1.7%
2012	1071	1.5%	317	1.5%	526	1.5%	275	2.1%	1119	1.6%
2013	1088	1.6%	322	1.5%	535	1.6%	279	1.4%	1136	1.5%
2014	1103	1.4%	326	1.3%	542	1.4%	283	1.2%	1151	1.3%
2015	1127	2.2%	333	2.1%	554	2.2%	288	1.9%	1175	2.1%
2016	1148	1.9%	339	1.8%	564	1.9%	293	1.6%	1196	1.8%
2017	1175	2.4%	347	2.3%	577	2.3%	299	2.1%	1223	2.3%
2018	1201	2.2%	354	2.1%	590	2.2%	305	2.0%	1249	2.1%
CAGR (2002-2017)	1.8%		2.1%		1.8%		2.5%		2.2%	
CAGR (2002-2007)	2.0%		3.0%		2.1%		3.7%		2.7%	

2003 SUBSTATION FORECAST

NEW BEDFORD: SUMMER EXTREME WEATHER, WITH ABB SUB-REGIONAL ADJUSTMENT FACTORS

FACTOR	1.00	1.00	1.00	1.00	1.00	1.00	1.00	1.00	1.00	1.00	1.00	1.00	
	*						*			*	*		
	ACUSHNET 112 #1 XFMR EXTREME WTHR	CUSHNET 114 #2 XFMR EXTREME WTHR	ARSENE MCGRAW #1 XFMR EXTREME WTHR	BELLROCK 140 EXTREME WTHR	CROSS RD 109 #1 XFMR EXTREME WTHR	CROSS RD 111 #2 XFMR EXTREME WTHR	CRYSTAL SPRING EXTREME WTHR	FISHER RD RTE EXTREME WTHR	INDUST PK 112 4SEA EXTREME WTHR	INDUST PK 111 EXTREME WTHR	PINE ST TOTAL EXTREME WTHR	KING LANE MCGRAW EXTREME WTHR	TOTAL NEB LOAD EXTREME WTHR
YEAR	(MW)	(MW)	(MW)	(MW)	(MW)	(MW)	(MW)	(MW)	(MW)	(MW)	(MW)	(MW)	(MW)
2002	20.5	20.2	15.1	4.1	14.7	14.3	10.7	14.2	8.5	27.3	88.7	13.8	250.0
2003	21.4	21.4	15.7	11.7	15.2	14.9	11.0	14.5	8.8	29.3	91.2	14.6	259.9
2004	21.9	22.2	16.1	11.8	15.6	15.3	13.3	14.9	9.0	31.3	93.3	15.0	279.6
2005	22.2	22.6	16.3	11.8	15.9	15.5	13.4	15.1	9.1	31.7	94.2	15.2	282.9
2006	22.4	22.8	16.4	11.8	16.2	15.8	13.5	15.1	9.3	32.1	95.2	15.3	285.9
2007	22.8	23.1	16.5	11.8	16.6	16.1	13.6	15.2	9.4	32.6	96.4	15.4	289.3
2008	22.8	23.5	16.7	11.9	17.0	16.5	13.8	15.3	9.6	33.0	97.7	15.6	293.2
2009	23.1	23.8	16.9	11.9	17.4	16.8	13.7	15.4	9.8	33.5	99.2	15.8	297.4
2010	23.5	24.3	17.1	11.9	17.9	17.1	13.8	15.5	9.9	34.0	100.8	16.0	301.8
2011	23.8	24.7	17.4	12.0	18.3	17.2	14.0	15.7	10.1	34.5	102.5	16.3	306.5
2012	24.2	25.2	17.6	12.0	18.7	17.5	14.1	15.8	10.3	35.1	104.1	16.6	311.0
2013	24.5	25.6	17.8	12.0	19.1	17.9	14.2	15.9	10.5	35.6	105.7	16.8	315.7
2014	24.8	26.0	18.0	12.1	19.5	18.3	14.2	16.0	10.7	36.0	107.1	17.1	319.9
2015	25.3	26.6	18.4	12.1	20.0	18.8	14.4	16.2	10.9	36.7	109.5	17.6	326.6
2016	25.8	27.2	18.7	12.1	20.5	19.3	14.5	16.3	11.2	37.2	111.3	18.0	332.4
2017	23.4	27.9	19.0	12.2	21.0	19.8	14.7	16.5	11.4	37.9	114.3	18.7	339.9
CAGR (2002-2017)	1.7%	2.2%	1.3%	7.5%	2.4%	2.2%	2.2%	1.0%	2.0%	2.2%	1.8%	2.0%	2.1%
CAGR (2002-2007)	1.8%	2.7%	1.8%	23.4%	2.5%	2.4%	4.8%	1.4%	2.0%	3.5%	2.2%	2.2%	3.0%

* INDICATES SUBSTATION(S) WITH STEPLOADS INCLUDED

2003 SUBSTATION FORECAST

PLYMOUTH: SUMMER EXTREME WEATHER, WITH ABB SUB-REGIONAL ADJUSTMENT FACTORS

FACTOR	1.00	1.00	1.00	1.00	1.00	1.00	1.00	1.00	1.00	1.00	1.00	1.00	1.00	1.00	
	DUXBURY 117 #1 XFMR EXTREME WTHR	DUXBURY 191 #2 XFMR EXTREME WTHR	KINGSTON 133AC #2 XFMR EXTREME WTHR	KINGSTON 133AC #1 XFMR EXTREME WTHR	WAREHAM AC #1 XFMR EXTREME WTHR	PERSHFLD AC #1 XFMR EXTREME WTHR	ROCHEST 112 WEST #2 XFMR EXTREME WTHR	ROCHEST 114 WEST #1 XFMR EXTREME WTHR	TREMONT 113GE #1 XFMR EXTREME WTHR	TREMONT 113GE #2 XFMR EXTREME WTHR	VALLEY GE #1 XFMR EXTREME WTHR	WAREHAM #1 XFMR EXTREME WTHR	WEST POND 115 #2 XFMR EXTREME WTHR	WEST POND 117 #1 XFMR EXTREME WTHR	TOTAL PLY LOAD EXTREME WTHR
YEAR	(MW)	(MW)	(MW)	(MW)	(MW)	(MW)	(MW)	(MW)	(MW)	(MW)	(MW)	(MW)	(MW)	(MW)	(MW)
2002	15.0	12.3	20.2	8.2	13.4	15.1	3.3	2.0	4.1	7.3	18.6	23.0	30.9	28.8	203.1
2003	15.9	12.8	20.9	8.8	14.3	15.3	3.3	2.0	4.1	7.4	19.5	24.5	33.1	30.1	211.8
2004	16.5	13.0	21.0	8.8	18.3	15.3	3.3	2.0	4.2	7.5	19.9	26.7	34.3	30.9	227.3
2005	17.1	13.3	21.2	8.9	20.8	15.4	3.3	2.0	4.5	7.6	20.3	27.9	35.6	31.8	229.5
2006	17.4	13.5	21.6	9.0	23.2	15.5	3.3	2.0	4.8	7.7	20.8	28.7	36.6	32.3	233.3
2007	17.7	13.7	22.0	9.1	24.8	15.6	3.3	2.0	5.2	7.7	21.2	29.5	37.4	32.7	242.0
2008	17.9	13.8	22.1	9.1	28.4	15.6	3.2	2.0	5.3	7.7	21.3	30.3	37.8	33.3	247.7
2009	18.5	14.2	22.8	9.3	29.4	15.7	3.3	2.0	5.8	7.8	21.5	31.4	38.3	33.7	254.3
2010	18.8	14.4	23.3	9.3	30.4	15.8	3.3	2.1	5.9	7.9	21.7	32.3	40.3	34.2	259.7
2011	18.9	14.6	23.5	9.3	33.1	15.9	3.3	2.1	6.0	8.0	21.8	32.8	40.8	34.4	264.5
2012	19.2	14.8	23.9	9.4	35.2	16.0	3.3	2.1	6.1	8.1	22.0	33.4	41.8	34.9	270.0
2013	19.5	15.0	24.3	9.5	36.1	16.0	3.3	2.1	6.1	8.1	22.1	33.9	42.6	35.3	273.8
2014	19.9	15.2	24.6	9.5	36.1	16.1	3.3	2.1	6.1	8.2	22.3	34.3	43.5	35.7	277.0
2015	20.5	15.6	25.3	9.7	36.3	16.3	3.4	2.1	6.1	8.2	22.5	34.9	45.0	36.4	282.3
2016	21.1	15.9	25.9	9.8	36.4	16.4	3.4	2.1	6.1	8.3	22.7	35.4	46.3	37.1	287.0
2017	21.7	16.3	26.6	10.0	36.5	16.6	3.4	2.1	6.1	8.4	23.0	36.1	48.1	37.9	293.9
CAGR (2002-2017)	2.5%	1.9%	1.9%	1.3%	6.9%	0.6%	0.2%	0.3%	2.7%	1.0%	1.4%	3.0%	3.0%	1.9%	2.5%
CAGR (2002-2007)	3.5%	2.3%	1.7%	2.0%	13.1%	0.6%	0.0%	0.3%	4.7%	1.2%	2.7%	5.1%	3.9%	2.3%	3.7%

* INDICATES SUBSTATION(S) WITH STEPLOADS INCLUDED.

2003 SUBSTATION FORECAST

CAPE: SUMMER EXTREME WEATHER, WITH ABB SUB-REGIONAL ADJUSTMENT FACTORS

FACTOR	1.03	1.02	1.04	1.04	1.02	1.05	1.05	1.04	1.00	1.00	1.04	1.04	1.04	1.04	1.00	1.00	
YEAR	FALMTH FPE #1 XFMR EXTREM WTHR (MW)	FALMTH GE #2 XFMR EXTREM WTHR (MW)	HARWICH ASEA #2 XFMR EXTREM WTHR (MW)	HARWICH MCGRAW #1 XFMR EXTREM WTHR (MW)	HARWICH MCGRAW EXTREM WTHR (MW)	HYANNIS GE2 EXTREM WTHR (MW)	HYANNIS GE1 EXTREM WTHR (MW)	MASHP MCLOUY EXTREM WTHR (MW)	ORLEANS DE #2 XFMR EXTREM WTHR (MW)	ORLEANS AC #1 XFMR EXTREM WTHR (MW)	OTIS GE EXTREM WTHR (MW)	SANDWICH MCGRAW EXTREM WTHR (MW)	WELFLT GE #1 XFMR EXTREM WTHR (MW)	WELFLT MCLOUY #2 XFMR EXTREM WTHR (MW)	PAVE PAWS EXTREM WTHR (MW)	UNACCT FOR EXTREM WTHR (MW)	TOTAL CAPE LOAD EXTREM WTHR (MW)
2002	38.5	47.0	41.5	37.8	30.9	48.1	45.8	37.7	22.2	17.9	22.3	29.6	21.7	10.6	2.5	4.8	443.5
2003	37.5	43.1	45.7	38.2	33.0	50.1	47.8	38.6	23.8	18.4	23.3	31.2	21.8	10.8	2.5	5.0	465.7
2004	38.0	44.3	43.8	40.0	34.2	51.2	49.1	40.7	24.2	18.7	25.0	32.7	21.9	10.9	2.5	5.3	473.8
2005	38.2	45.0	43.8	40.5	34.9	51.9	49.8	41.3	24.4	18.8	25.5	32.8	22.0	11.0	2.5	5.4	482.7
2006	38.4	45.5	44.4	40.9	35.5	52.5	50.5	41.9	24.6	19.0	25.9	33.0	22.2	11.0	2.5	5.5	488.2
2007	38.8	46.0	45.0	41.3	36.1	53.3	51.2	42.5	24.8	19.1	26.3	33.5	22.4	11.1	2.5	5.8	494.2
2008	38.9	46.7	45.7	41.7	36.8	54.1	52.0	43.1	25.0	19.2	26.8	34.0	22.5	11.2	2.5	5.8	501.1
2009	39.3	47.5	46.5	42.2	37.6	55.0	52.8	43.9	25.2	19.4	27.3	34.5	22.7	11.2	2.5	6.0	508.8
2010	39.8	48.2	47.3	42.8	38.5	55.9	53.7	44.7	25.4	19.6	27.8	35.1	23.1	11.3	2.5	6.1	516.8
2011	39.8	49.0	48.1	43.4	39.3	56.8	54.6	45.5	25.7	19.8	28.3	35.8	23.5	11.4	2.5	6.3	525.0
2012	40.2	49.8	48.9	44.0	40.1	57.7	55.5	46.3	25.9	19.0	28.8	36.4	23.8	11.4	2.5	6.5	533.0
2013	40.8	50.6	49.8	44.5	41.1	58.7	56.5	47.1	26.2	19.2	29.4	37.1	24.1	11.5	2.5	6.7	541.4
2014	41.0	51.4	50.8	45.0	41.9	59.5	57.3	47.9	26.4	19.4	29.9	37.7	24.2	11.6	2.5	6.9	549.9
2015	41.8	52.6	51.8	45.8	43.2	60.9	58.6	49.1	26.7	19.6	30.5	38.5	24.5	11.7	2.5	7.1	560.8
2016	42.1	53.7	52.9	46.5	44.4	62.0	59.7	50.1	24.0	19.9	31.2	39.3	24.8	11.7	2.5	7.4	571.2
2017	42.8	55.1	54.4	47.4	45.9	63.5	61.2	51.5	24.4	19.2	31.9	40.3	25.2	11.9	2.5	7.7	584.8
CAGR 2002-2017	1.1%	2.0%	1.8%	1.5%	2.7%	1.9%	1.9%	2.1%	1.5%	1.3%	2.4%	2.2%	1.2%	0.7%	0.0%	3.5%	1.8%
CAGR 2002-2007	1.1%	2.5%	1.8%	1.8%	3.1%	2.1%	2.2%	2.4%	1.5%	1.5%	3.3%	2.3%	1.2%	0.8%	0.0%	4.3%	2.1%

NOTE: WAT LOCKET LOAD IS INCLUDED IN FALMOUTH TOTAL

* INDICATES SUBSTATIONS WITH STEP LOADS INCLUDED.

2003 SUBSTATION FORECAST; UPDATED WITH OAK STREET BREAKOUT

CAPE: SUMMER EXTREME WEATHER, WITH ABB SUB-REGIONAL ADJUSTMENT FACTORS

FACTOR	1.02	1.02	1.04	1.04	1.02	1.05	1.05	1.04		1.00	1.00	1.04	1.04	1.04	1.04	1.00	1.00	
YEAR	FALMTH FPE #1 XFMR EXTREM WTHR (MW)	FALMTH GE #2 XFMR EXTREM WTHR (MW)	HARWICH ASEA #2 XFMR EXTREM WTHR (MW)	HARWICH MCGRAW #1 XFMR EXTREM WTHR (MW)	HATCHVL MCGRAW EXTREM WTHR (MW)	HYANNIS GE2 EXTREM WTHR (MW)	HYANNIS GE1 EXTREM WTHR (MW)	MASHP MOLONY EXTREM WTHR (MW)	OAK STREET EXTREM WTHR (MW)	ORLEANS DE #2 XFMR EXTREM WTHR (MW)	ORLEANS AC #1 XFMR EXTREM WTHR (MW)	OTIS GE EXTREM WTHR (MW)	SANDWICH MCGRAW EXTREM WTHR (MW)	WELLFLT GE #1 XFMR EXTREM WTHR (MW)	WELLFLT MOLONY #2 XFMR EXTREM WTHR (MW)	PAVE PAWS EXTREM WTHR (MW)	UNACCT FOR EXTREM WTHR (MW)	TOTAL CAPE LOAD EXTREM WTHR (MW)
2002	35.5	47.0	47.5	37.8	30.9	48.3	45.9	23.3	22.6	20.2	15.9	22.3	21.4	21.1	10.6	2.5	4.6	443.5
2003	37.5	43.1	43.1	38.2	33.0	50.2	47.3	24.4	23.7	20.8	16.4	23.3	22.5	21.6	10.8	2.5	5.0	465.7
2004	39.0	44.3	43.8	40.0	34.2	51.3	49.0	25.0	24.4	21.2	16.7	23.0	23.4	21.9	10.9	2.5	5.3	473.8
2005	38.2	45.0	43.9	40.5	34.9	52.0	49.8	25.3	24.8	21.4	16.8	23.5	23.7	22.0	11.0	2.5	5.4	482.7
2006	38.4	45.5	44.4	40.9	35.5	52.8	50.4	25.7	25.1	21.6	17.0	23.9	24.0	22.2	11.0	2.5	5.5	488.2
2007	38.6	46.0	45.0	41.3	36.1	53.4	51.1	26.1	25.5	21.8	17.1	24.3	24.3	22.4	11.1	2.5	5.6	494.2
2008	38.9	46.7	45.7	41.7	36.8	54.2	51.9	26.6	25.9	22.0	17.2	24.8	24.7	22.5	11.2	2.5	5.8	501.1
2009	39.3	47.5	46.5	42.2	37.3	54.9	52.7	27.2	26.4	22.2	17.4	25.3	25.0	22.7	11.2	2.5	6.0	508.8
2010	39.6	48.2	47.3	42.8	38.5	55.8	53.3	27.7	26.9	22.4	17.6	25.8	25.4	23.1	11.3	2.5	6.1	516.8
2011	39.9	49.0	48.1	43.4	39.3	56.8	54.5	28.2	27.4	22.7	17.8	26.3	25.9	23.5	11.4	2.5	6.3	525.0
2012	40.2	49.8	48.9	44.0	40.1	57.8	55.4	28.7	27.9	23.0	18.0	26.8	26.3	23.8	11.4	2.5	6.5	533.0
2013	40.6	50.6	49.8	44.5	41.1	58.8	56.3	29.3	28.4	23.2	18.2	29.4	26.7	24.1	11.5	2.5	6.7	541.4
2014	41.0	51.4	50.6	45.0	41.9	59.4	57.1	29.8	28.8	23.4	18.4	29.9	27.1	24.2	11.6	2.5	6.9	549.9
2015	41.6	52.6	51.8	45.8	43.2	60.7	58.4	30.6	29.5	23.7	18.6	30.5	27.8	24.5	11.7	2.5	7.1	560.8
2016	42.1	53.7	52.9	46.5	44.4	61.9	59.3	31.2	30.2	24.0	18.8	31.2	28.3	24.8	11.7	2.5	7.4	571.2
2017	42.8	55.1	54.4	47.4	45.9	63.3	61.0	32.1	31.0	24.4	19.2	31.9	29.0	25.2	11.9	2.5	7.7	584.6
CAGR 2002-2017	1.1%	2.0%	1.8%	1.5%	2.7%	1.9%	1.9%	2.1%		1.5%	1.9%	2.4%	2.0%	1.2%	0.7%	0.0%	3.5%	1.8%
CAGR 2002-2007	1.1%	2.3%	1.6%	1.8%	3.1%	2.1%	2.2%	2.4%		1.5%	1.5%	3.3%	2.3%	1.2%	0.8%	0.0%	4.3%	2.1%

NOTE NANTUCKET LOAD IS INCLUDED IN FALMOUTH TOTAL

* INDICATES SUBSTATION(S) WITH STEP LOADS INCLUDED.

Equipment Ratings and Limits

Bulk Transformers

Referencing **Tables #1** (3 pages), overload ratings for all 115/23kV and 115/13.2kV bulk substation transformers have been calculated. A comparison of nameplate and overload capabilities with SCADA alarm ratings and main breaker trip settings reveals that there are a number of stations where transformer capacity is greatly constrained by ancillary equipment, such as circuit breakers and CT's.

The table lists both Summer and Winter "Normal" and "Emergency" overload ratings, where "Normal" is a 0% loss-of-life rating and "Emergency" is a 1% loss-of-life rating. It is the 1% loss-of-life rating that is used as the post-contingency limit in the T&D Operating Study.

An effort is currently underway to calculate updated overload ratings for all substation transformers system-wide using EPRI's "PT Load" software. Updated ratings for NSTAR/South transformers calculated in this manner are not expected to be available until later this year, so the existing ratings (calculated in 2003 using a legacy Fortran program) were used.

Current no-load-tap (NLT) settings for NSTAR/South bulk substation transformers appear in **Tables #1A** (3 pages)

Overhead Open-Wire 23kV and 13.2kV DSS Feeders

Appearing in **Tables #2,** each 23kV and 13.2kV DSS feeder conductor emanating from the substations is rated for its normal and emergency conditions using the following criteria:

Conductor temperature	=	80 Degree C (Normal rating)
	=	110 Degree C (Long Term Emergency)
	=	140 Degree C (Short Term Emergency)
Ambient Temperature	=	100 Degree F (Summer)
	=	50 Degree F (Winter)
Wind Velocity	=	3 feet per second
Long Term Emergency	=	LTE (12 hour rtg in summer/4 hour rtg in winter)
Short Term Emergency	=	STE (15 minutes rating summer & winter)

New 795 ACSR conductors are rated for 100 Degree C conductor temperatures for continuous rating.

Please note that these criteria apply to DSS lines of sub-transmission-type construction on rights-of-way; distribution feeders constructed streetside should be considered on a case-by-case basis due to possible sag limitations that would preclude operating at the conductor temperatures listed above.

Overhead Spacer Cable 23kV and 13.2kV DSS Feeders

DSS and distribution circuits composed of Hendrix "spacer cable" construction are rated in accordance with the manufacturer's applicable cable rating charts in **Tables #2A** (2 pages). NSTAR/South uses 3 fps wind at 75 C conductor temperature ratings for normal conditions, 100 C ratings for 12-hour LTE.

Underground 13.2kV DSS Feeders (New Bedford)

DSS and distribution circuits composed primarily of underground cables are rated in accordance with applicable cable ratings in **Table #3**. While this situation is primarily confined to the Acushnet and Pine Street substations in the New Bedford district, there are a few other substations where DSS feeders have underground cable getaways for a short distance emanating the station.

Underground New Bedford 13.2kV DSS Feeders, Severe Emergency:

Attached after Table #3 is a memo issued November, 1992, listing ratings for the Acushnet – Pine Street 13.2kV tie circuits in the event of a double-contingency outage of both 115kV supply lines to Pine Street. Applicable cable ratings for the five tie circuits are the two (2) most-limiting manhole conditions along the duct run were calculated using the CIDAC Fortran program, which models duct bank configuration and actual cable loadings.

Feeder and Station Alarm Settings

Recommendations herein for changing feeder alarm settings are based on the alarm settings that exist currently with SCADA. The load flow results show actual power flow for each transformer and feeder outage contingency. Actual station and alarm settings will be provided in Appendix B.

345kV and 115kV Transmission Lines

The calculated values of transmission line ratings encompassing all equipment between the two end terminals were used. The final line rating of each line utilizes the overload capability of each component (such as disconnect switches, breakers, C.T's, wave traps, etc.) as per applicable ANSI standard. For detailed rating information for particular lines or autotransformers, please refer to ISO-

NE's NX-9 database, available on the NSTAR intranet website at the following address:

http://workingatnstar/default.asp?organization=eo&contentFile=/ed/iso/index.htm

The criteria for rating 345kV and 115kV line conductors are the same as feeder conductors except for the normal rating calculation of transmission lines, the conductor temperature of 100 Degree C is used.

The following voltage alarm settings are currently used by SCADA:

Voltage Alarm Settings in SCADA

23kV Feeders

Low Voltage Alarm	=	22.8kV monitored on B phase
	=	22.4kV monitored on A phase
High voltage alarm	=	24.5kV on any phase

115kV Lines

Low voltage alarm	=	108.0kV
High voltage alarm	=	123.0kV

345kV Lines

Low voltage alarm	=	328.1kV
High voltage alarm	=	361.9kV

115kV Switched Capacitors at Hyannis GE2 (40 MVARs)

Low voltage alarm	=	108.0kV
High voltage alarm	=	121.0kV

NSTAR/SOUTH TRANSFORMER OVERLOAD CALCULATIONS

DRAFT

NSTAR ELECTRIC GAS

USING 2002 / 2003 SUMMER AND WINTER ACTUAL STATION LOADS COINCIDENT WITH SYSTEM PEAK

SUMMER PEAK 8/14/02; WINTER PEAK 1/22/03

CAPE & VINEYARD DISTRICT

TABLE #1 PAGE 1

TRANSFORMER OVERLOAD CAPABILITIES

SUBSTATION		MANUFACTURER	NAME PLATE RATING (MVA)	DEGREE C RISE	SUMMER LONG TERM EMERGENCY 0.039% L of L Amb = 32 C	SUMMER LONG TERM EMERGENCY 1% L of L Amb = 32 C	SUMMER SHORT TERM EMERGENCY 3% L of L Amb = 32 C	WINTER LONG TERM EMERGENCY 0.039% L of L Amb = 10 C	WINTER LONG TERM EMERGENCY 1% L of L Amb = 10 C	WINTER SHORT TERM EMERGENCY 3% L of L Amb = 10 C
E33	FALMOUTH 1 (105W)	FPE	30/40/50 [56]	55	59.6	71.3 *	71.9 *	70.6	81.8	83.6 *
E33	FALMOUTH 2 (107E)	GE	30/40/50 [56]	55	61.0	73.3	77.6	72.1	83.7	87.7
E68	HARWICH 119	ASEA	30/40/50 [56]	55	62.0	72.5 *	72.5 *	74.2	85.8	87.2 *
E68	HARWICH 118	MCGRAW EDISON	30/40/50 [56]	55	66.9	74.7 *	74.7 *	76.9	87.0 *	87.0 *
E36	HATCHVILLE	MAGNETEK	30/40/50 [56]	55	58.9	70.7	74.7	67.7	73.3	81.6
E61	HYANNIS 123	GE #3	46/60/75 [84]	55	100.6	119.7	125.8 *	106.9	122.5	120.2
E61	HYANNIS 124	GE #2	30/40/50 [56]	55	67.9	80.3	82.6	70.0	81.2	85.1
E46	MASHPEE	MOLONEY	20/26/33 [37]	55	35.7	43.0	44.5 *	43.7	53.7	53.1 +
E20	OAK STREET	ABB	30/40/50	55	61.5	73.7	76.0 *	74.7	85.3	90.2 +
E75	ORLEANS 119	ALLIS CHALMERS	20/26/33	55	47.2 *	47.2 *	47.2 *	49.1	51.7 *	51.7 *
E75	ORLEANS 118	WAUKESHA	30/40/50 [56]	55	70.6	82.2 *	82.2 *	77.0	93.2	91.9 *
E15	OTIS	GE	16/21/26 [29]	55	32.8	39.4	40.8 *	37.3	43.2	45.3
E16	SANDWICH	MAGNETEK	30/40/50 [56]	55	61.7	72.2 *	72.2 *	74.6	85.2 *	86.3 *
E76	WELLFLEET 96	GE	12/16/20	55	23.7	29.0	29.6 #	27.3	32.0	33.2 +
E76	WELLFLEET 94	MOLONEY	16/21/26	55	29.3	35.3	37.2 #	34.9	40.9	42.2 +
	SPARE BULK TRANSFORMERS									
	OLD FALMOUTH	GE	12/16/20	55	STORED AT FALMOUTH SUBSTATION					

Footnotes Ratings not a above Loss of Life Percent Due to Stated Reason
* = Limited by Top Oil Temperature
+ = Limited by Hottest Spot Copper Temperature
# = Limited by Top Oil and Hottest Spot Copper Temperature

PLYMOUTH DISTRICT

TABLE #1 PAGE 2

TRANSFORMER OVERLOAD CAPABILITIES

SUBSTATION		MANUFACTURER	NAME PLATE RATING (MVA)	DEGREE C RISE	SUMMER			WINTER		
					LONG TERM EMERGENCY 0.039% L of L Amb = 32 C	LONG TERM EMERGENCY 1% L of L Amb = 32 C	SHORT TERM EMERGENCY 3% L of L Amb = 32 C	LONG TERM EMERGENCY 0.039% L of L Amb = 10 C	LONG TERM EMERGENCY 1% L of L Amb = 10 C	SHORT TERM EMERGENCY 3% L of L Amb = 10 C
738	DUXBURY 117	MCGRAW-EDISON	30/40/50/55	65	75.9	86.5	86.5	80.3	93.4	93.4
738	DUXBURY 191	MCGRAW-EDISON	30/40/50/55	65	66.2	76.7	76.7	80.4	92.3	92.3
735	KINGSTON 192	ALLIS CHALMERS	12/16/20/22	65	25.3	29.5 *	29.5 *	29.3	33.3	34.5 *
735	KINGSTON 193	ALLIS CHALMERS	12/16/20/22	65	24.4	28.8 *	28.8 *	28.2	32.6	33.4 *
731	MANOMET	ALLIS CHALMERS	12/16/20/22	65	26.3	31.0 *	31.0 *	28.2	32.6	33.4 *
739	MARSHFIELD	ALLIS CHALMERS	12/16/20/22	65	23.3	27.8 *	27.8 *	29.4	34.0	34.9 *
745	ROCHESTER 114	WESTINGHOUSE	5/7	65	6.4	8.4	8.8 *	7.3	9.7	10.0 +
745	ROCHESTER 112	WAGNER	10/12	65	17.2	20.3 *	20.3 *	17.3	20.3	21.0 *
713	TREMONT 113	GE	12	65	12.0 *	12.0 *	12.0 *	12.0 *	12.0 *	12.0 *
713	TREMONT 114	GE	12	65	12.0 *	12.0 *	12.0 *	12.0 *	12.0 *	12.0 *
715	VALLEY 115	GE	12/16/20/22	65	25.0	30.0	30.4 *	29.7	34.4	36.0 *
715	VALLEY 106	ALLIS CHALMERS	15/20/25/23	65	34.4	39.5 *	39.5 *	40.7	47.1	47.4 *
714	WAREHAM	ASEA	30/40/50/55	65	62.5 *	62.5 *	62.5 *	72.2 *	72.2 *	72.2 *
737	WEST POND 116	GE	30/40/50/55	65	61.7	74.0	78.2	72.2	83.7	87.7
737	WEST POND 117	GE	30/40/50/55	65	66.3	77.3 *	77.3 *	70.7	82.0	84.4 *

* No loss-of-life Ratings Calculated for these banks. Top nameplate used. No heat run data available, single-phase banks cannot be modeled in software

SPARE BULK TRANSFORMERS

TREMONT GE 1-PHASE	4	65	STORED AT TREMONT SUBSTATION	

Footnotes: Ratings not above Loss of Life Percent Due to Static Reason
* = Limited by Top Oil Temperature
+ = Limited by Hottest Spot Copper Temperature
# = Limited by Top Oil and Hottest Spot Copper Temperature

NEW BEDFORD DISTRICT

TABLE #1 PAGE 3

TRANSFORMER OVERLOAD CAPABILITIES

SUBSTATION		MANUFACTURER	NAME PLATE RATING (MVA)	DEGREE C RISE	SUMMER			WINTER		
					LONG TERM EMERGENCY 0.039% L of L Amb = 32 C	LONG TERM EMERGENCY 1% L of L Amb = 32 C	SHORT TERM EMERGENCY 3% L of L Amb = 32 C	LONG TERM EMERGENCY 0.039% L of L Amb = 10 C	LONG TERM EMERGENCY 1% L of L Amb = 10 C	SHORT TERM EMERGENCY 3% L of L Amb = 10 C
E12	ACUSHNET 112	MAGNETEK	37.5/50/62.5[70]	65	86.0	101.4 *	101.4 *	93.4	108.3	112.7 *
E12	ACUSHNET 114	AEB	37.5/50/62.5[70]	65	80.3	97.2	97.9 *	90.2	104.9	109.9 *
E64	ARSENE STREET	MCGRAW EDISON	21/28/35 [55]	65	40.4	47.7 *	47.7 *	46.8	53.2	53.7 *
E61	CROSS ROAD 111	GE	12/16/20[22]	65	54.4	63.6 *	62.6 *	63.3	72.6 *	72.6 *
E61	CROSS ROAD 113	ALLIS CHALMERS	12/16/20[22]	65	27.7	33.9 *	32.9 *	33.2	37.3	38.3 *
E46	CRYSTAL SPRING	GE	12/16/20[22]	65	24.7	29.6	31.2	28.3	32.7	34.3
E67	FISHER ROAD	WAGNER	10/12.5	65	12.1	15.1 *	15.1 *	14.8	13.0 *	18.5 *
E67	FISHER ROAD	RTE/ASEA	12/16/20[22]	65	26.0	27.6 *	27.6 *	30.2	33.2 *	33.2 *
E36	INDUSTRIAL PARK 111	ASEA	30/40/50[56]	65	61.3	66.1 *	66.1 *	66.8	75.1 *	75.1 *
E36	INDUSTRIAL PARK 112	ASEA	30/40/50[56]	65	58.3	66.1 *	66.1 *	67.2	75.6 *	75.6 *
E11	PINE STREET 112	GE	33/45/60[67]	65	75.0	89.7	94.6	81.1	94.0	98.5
E11	PINE STREET "BC"	FPE	33/45/60[67]	65	78.1	86.2 *	86.2 *	84.5	93.2 *	96.2 *
E11	PINE STREET 114	GE	33/45/60[67]	65	75.3	90.6	95.7	84.4	97.7	102.5
E24	WING LANE	MCGRAW EDISON	21/28/35[39]	65	44.7	52.1 *	52.1 *	52.2	60.5 *	60.5 *

SPARE BULK TRANSFORMERS

OLD INDUSTRIAL PARK	GE	12/16/20[24]	65	STORED AT ACUSHNET SUBSTATION
OLD ARSENE ST	WESTINGHOUSE	10/12.5	65	STORED AT PINE STREET YARD

Footnotes: Ratings not in above Loss of Life Percent Due to Stated Reason
* = Limited by Top Oil Temperature
+ = Limited by Hottest Spot Copper Temperature
# = Limited by Top Oil and Hottest Spot Copper Temperature

TABLE #1A PAGE CAPE & VINEYARD DISTRICT BULK TRANSFORMER NO LOAD TAPS **DATE** 12/26/03

BULK STATION	SIZE MVA	TRANSFORMER SERIAL NO	KV FULL	AVAILABLE NO LOAD TAPS KV						PRESENT TAP	Change Date
OTIS (GE)	12/16/20	P06-459	115/23	117.00	114.00	111.00	108.00	105.00		114.00	
SANDWICH (GE)	30/40/50	A1167	115/24	120.75	117.875	115.00	112.125	109.250		115.00	
FALMOUTH (GE)	30/40/50	4543511	115/24	117.375	115.00	112.625	110.250	107.875		112.625	
FALMOUTH (FPE)	30/40/50	50286	115/24	117.375	115.00	112.625	110.250	107.875		112.625	
HATCHVILLE (WC)	30/40/50	C-0503254	115/24	117.375	115.00	112.625	110.250	107.875		112.625	
WAQUOIT (FPE) (MCL)	20/26/33	P71016	115/24	120.750	117.875	115.000	112.125	109.250		112.125	
HYANNIS (GE2)	30/40/50	K54339	115/24	117.375	115.00	112.625	110.250	107.875		112.125	
HYANNIS (GE3)	45/60/75	K54752	115/24	117.375	115.00	112.625	110.250	107.875		112.125	
HARWICH (WC)	30/40/50	C-0503254	115/24	117.375	115.00	112.625	110.250	107.875		115.00	03/01/2002
HARWICH (GE2)	30/40/50	A1527	115/24	117.375	115.00	112.625	110.250	107.875		115.00	
ORLEANS (AC)	20/26/33	4-104-28807	115/24	119.700	114.00	108.300				114.00	
ORLEANS (WAL)	30/40/50	A3195	115/24	117.375	115.00	112.625	110.250	107.875		115.00	
WELLFLEET (GE)	12/16/20	255720	114/23	114.00	111.00	108.00	105.00	102.00		108.00	07/23/1999
WELLFLEET (WCL)	12/16/20	196703	114/23	114.00	111.00	108.00	105.00	102.00		108.00	07/23/1999
CHASE Street (FPE)			115/24	X	X	X	X	X	+/- 15% LTC		
SPARE (GE)	12/16/20	223167	114/23	114.00	111.50	108.00	105.50	102.00			
Base Rates	5		115/23	120.750	117.875	115.00	112.125	109.250		115.00	
Cape 135 Auto (WC)	40/2	3-243045	345/115	124.00	121.00	118.00	115.00	112.00		118.00	07/12/2003
Cape 121 Auto (No Sub)	40/2	90284	345/115	124.00	121.00	118.00	115.00	112.00	109.00	118.00	
Cape 120 Auto (GE)	45/2		345/115	120.750	117.875	115.00	112.125	109.250		117.875	05/19/2003

PLYMOUTH DISTRICT BULK TRANSFORMER NO LOAD TAPS

DATE 12/26/03

TABLE #1A PAGE 2

SIZE	TRANSFORMER	KV	AVAILABLE NO LOAD TAPS					PRESENT	Change	
MVA	SERIAL NO	HV/LV	#1(A)	#2(B)	#3(C)	#4(D)	#5(E)	TAP	Date	
12/16/20	01-8224-51620-1	115/23	117875	115000	112125	109250	106375	115000		
12/16/20	01-8224-54040-1	115/23	117875	115000	112125	109250	106375	115000		
12/16/20	87-8224-44658-1	115/24	117875	115000	112125	109250	106375	115000		
12/16/20	01-8224-50047-1	115/23	117875	115000	112125	109250	106375	112125		
30/40/50	V122460	115/24	120750	117875	115000	112125	109250	115000		
30/40/50	K548610	115/24	117875	115000	112125	109250	106375	115000		
10/12	9W1243	115/13.2	117875	115000	112125	109250	106375	115000		
5	8991818	115/13.2	117875	115000	112125	109250	106375	115000		
12	5906298/5/6/7	114/23	117000	114000	111350	108500	105800	114000		Single Phase Units
12	5906298/4/5	114/23	117000	114000	111350	108500	105800	114000		Single Phase Units
12/16/20	F961304	114/23	117000	114000	111350	108500	105800	114000		
15/20/25	1-8229-504804-1	115/23	117875	115000	112125	109250	106375	115000		
30/40/50	C-07117-5-2	115/24	117875	115000	112125	109250	106375	115000		
30/40/50	C-07117-5-1	115/24	117875	115000	112125	109250	106375	115000		
30/40/50	A04287	115/24	117875	115000	112125	109250	106375	115000		
400	C-06897-5-2	345/118	124000	121000	118000	115000	112000	115000	05/16/2003	

TABLE #1A PAGE 3

NEW BEDFORD DISTRICT BULK TRANSFORMER NO LOAD TAPS

DATE 12/26/03

BULK STATION	SIZE MVA	TRANSFORMER SERIAL NO	KV HV/LV	AVAILABLE NO LOAD TAPS #1(A)	#2(B)	#3(C)	#4(D)	#5(E)	PRESENT TAP	Change Date
ACUSHNET #112 (WAG)	37.5/50/62.5	A1032T	115/13.2	117875	115000	112125	109250	106375	115000	
ACUSHNET #114 (ABB)	37.5/50/62.5	A0675T	115/13.2	117875	115000	112125	109250	106375	115000	
INDUSTRIAL PARK #111 (ASEA)	30/40/50	A0294T	115/13.2	117875	115000	112125	109250	106375	115000	
INDUSTRIAL PARK #112 (ASEA)	30/40/50	A0293T	115/13.2	117875	115000	112125	109250	106375	115000	
CROSS ROAD #109 (A-C)	12/16/20	01-8224-54050-1	115/13.2	120750	117875	115000	112125	109250	109250	
CROSS ROAD #111 (GE)	30/40/44.8	D575930	110/13.8	115000	112500	110000	107500	105000	115000	
CRYSTAL SPRING (GE)	12/16/20	F981880B	115/13.2	117875	115000	112125	109250	106375	115000	
ARSENE (Mc)	21/28/35	C-06442-5-1	115/13.2	117875	115000	112125	109250	106375	115000	
WING LANE (Vc)	21/28/35	C-06442-5-2	115/13.2	117875	115000	112125	109250	106375	115000	
FISHER ROAD (ASEA)	12/16/20	RA720808	115/13.2	117880	115000	113130	110250	107380	115000	
FISHER ROAD (WAG)	10/12.5	Y149P16478	115/13.2	117875	115000	112125	109250	106375	115000	
PINE STREET #112E (GE)	36/48/60	D596828	115/13.2	117875	115000	112125	109250	106375	115000	
PINE STREET #114C (FPE)	36/48/60	50375-1	115/13.2	117875	115000	112125	109250	106375	115000	
PINE STREET #114F (GE)	36/48/60	D596827	115/13.2	117875	115000	112125	109250	106375	115000	
BELL ROCK ROAD #D21 (A-C)	15/20/25	01-8224-56540-1	115/34.5	117875	115000	112125	109250	106375	115000	
BELL ROCK ROAD #N12 (A-C)	15/20/25	01-8224-56540-2	115/34.5	117875	115000	112125	109250	106375	115000	
ASSONET	5/5.6	SDT4196-0101	34.5/13.2	35360	34500	33640	32775	31910	34500	
SPARE (GE)	12/16/20	F981880A	115/13.2	117875	115000	112125	109250	106375		

THERMAL RATINGS OF DISTRIBUTION "ACSR" CONDUCTORS OPERATED AT 13.2KV

TABLE #2 PAGE 1

CONDUCTOR TEMPERATURES DEGREE C N=60, LTE=110, STE=140

SUMMER AMBIENT = 100 DEGREE F(37 7 DEG C), WINTER AMBIENT = 50 DEGREE F (10 DEG C)

WIND VELOCITY = 3 FEET/SECOND

SOLAR EFFECT 5 590(S)/2 410 (W)

	RATING IN SUMMER @13.2 KV						RATNG IN WINTER @13 2 KV					
CONDUCTOR SIZE	N AMPS	LTE AMPS	STE AMPS	N MVA	LTE MVA	STE MVA	N AMPS	LTE AMPS	STE AMPS	N MVA	LTE MVA	STE MVA
1/0 ACSR 6/1	250	330	385	5.7	7.5	8.8	340	395	440	7 8	9 0	10 1
2/0 ACSR 6/1	290	385	450	6 6	8 8	10.3	395	460	510	9 0	10 5	11 7
3/0 ACSR 6/1	340	445	525	7 8	10 2	12 0	460	535	600	10 5	12 2	13 7
4/0 ACSR 6/1	395	520	610	9 0	11 9	13.9	540	625	695	12 3	14 3	15 9
336 4 ACSR 26/7	540	715	840	12 3	16 3	19 2	740	860	960	16 9	19 7	21 9
477 ACSR 26/7	675	900	1065	15 4	20 6	24 3	930	1090	1215	21 3	24 9	27 8
795 ACSR 36/1	925	1235	1460	21.1	28 2	33 4	1275	1490	1665	29 2	34 1	38 1
@ 100 DEG C-->	1140			26 1								
795 ACSR 26/7	950	1270	1505	21 7	29.0	34.4	1310	1535	1720	30 0	35 1	39 3
@ 100 DEG C-->	1175			26 9								
1590 ACSR 54/19	1520	2050	2440	34 8	46 9	55 8	2120	2490	2790	48 5	56 9	63 8
1703 ACAR 48/13	1455	1965	2340	33.3	44.9	53.5	2030	2385	2675	46.4	54.5	61.2
2-1703 ACAR 48/13	2910	3930	4675	66.5	89.9	106 9	4055	4765	5345	92 7	108 9	122 2
2335 ACAR 54/7	1685	2285	2730	38 5	52.2	62 4	2400	2825	3175	54 9	64 6	72 6
2338 ACAR 48/13	1715	2325	2775	39 2	53 2	63 4	2400	2825	3175	54 9	64 6	72 6

NOTES:

(1) N = NORMAL RATING, LTE = LONG TERM EMERGENCY RATING, STE = SHORT TERM EMERGENCY RATING

(2) N = CONTINUOUS, LTE = 12 HOURS IN SUMMER 4 HOURS IN WINTER, STE = 15 MINUTES

(3) ABOVE RATINGS ARE THERMAL RATINGS OF CONDUCTORS AND NOT LIMITED BY ANY OTHER ELEMENT OR SAG LIMITATIONS

(4) FOR DISTRIBUTION LINE CONSTRUCTION, CONDUCTOR ABOVE 795 MCM ACSR IS SELDOM USED AT COM/ELECTRIC.

THERMAL RATINGS OF DISTRIBUTION "Copper" CONDUCTORS AT 13.2KV

TABLE #2 PAGE 2

CONDUCTOR TEMPERATURES DEGREE C N=80, LTE=110, STE=125

SUMMER AMBIENT = 100 DEGREE F(37.7 DEG C), WINTER AMBIENT = 50 DEGRE F (10 DEG C)

WIND VELOCITY = 3 FEET/SECOND

SOLAR EFFECT 5.590(S)/2.410 (W)

	RATING IN SUVMER @13.2 KV						RATING IN WINTER @13.2 KV					
CONDUCTOR SIZE	N AMPS	LTE AMPS	STE AMPS	N MVA	LTE MVA	STE MVA	N AMPS	LTE AMPS	STE AMPS	N MVA	LTE MVA	STE MVA
#4CU 7STR	170	220	240	3.9	5.0	5.5	230	265	280	5.3	6.1	6.4
#2 CU 7 STR	230	300	325	5.3	6.9	7.4	310	360	380	7.1	8.2	8.7
#1 CU 7 STR	270	350	380	6.2	8.0	8.7	360	420	445	8.2	9.6	10.2
1/0 CU 19 STR	315	410	445	7.2	9.4	10.2	420	490	520	9.6	11.2	11.9
2/0 CU 7 STR	365	475	520	8.3	10.9	11.9	490	570	605	11.2	13.0	13.8
4/0 CU 7 STR	490	645	705	11.2	14.7	16.1	665	775	825	15.2	17.7	18.9
250 MCM CU 19 STR	550	725	790	12.6	16.6	18.1	745	870	925	17.0	19.9	21.1
300 MCM CU 19 STR	615	815	895	14.1	18.6	20.5	840	980	1040	19.2	22.4	23.8
350 MCM CU 19 STR	680	900	990	15.5	20.6	22.6	930	1085	1155	21.3	24.8	26.4
500 MCM CU 37 STR	855	1140	1250	19.5	26.1	28.6	1175	1375	1455	26.9	31.4	33.3
700 MCM CU 37 STR	1055	1410	1545	24.1	32.2	35.3	1455	1705	1810	33.3	39.0	41.4
750 MCM CU 37 STR	1100	1470	1615	25.1	33.6	36.9	1520	1780	1890	34.8	40.7	43.2

NOTES:

(1) N = NORMAL RATING, LTE = LONG TERM EMERGENCY RATING, STE = SHORT TERM EMERGENCY RATING

(2) N = CONTINUOUS, LTE = 12 HOURS IN SUMMER, 4 HOURS IN WINTER, STE = 15 MINUTES

(3) ABOVE RATINGS ARE THERMAL RATINGS OF CONDUCTORS AND NOT LIMITED BY ANY OTHER ELEMENT OR SAG LIMITATIONS

THERMAL RATINGS OF DISTRIBUTION "ACSR" CONDUCTORS AT 23KV AND 25KV "ALUMINUM" AND "COPPER" CABLES

TABLE #2 PAGE 3

FOR OVERHEAD CONDUCTORS

CONDUCTOR TEMPERATURES IN DEGREE C (Tc) NORMAL = 80, LTE = 110, STE = 140
AMBIENT TEMPERATURE (Ta) = 100 DEGREE F (SUMMER), 50 DEGREE F (WINTER)
(37.7 degree C) (10 degree C)
WIND VELOCITY (SUMMER & WINTER) = 3 FEET/SECOND
SOLAR EFFECT 5 590(S)/2 410 (W)

	RATING IN SUMMER @23 KV						RATING IN WINTER @23 KV					
CONDUCTOR SIZE	N AMPS	LTE AMPS	STE AMPS	N MVA	LTE MVA	STE MVA	N AMPS	LTE AMPS	STE AMPS	N MVA	LTE MVA	STE MVA
1/0 ACSR 6/1	250	330	385	10 0	13 1	15 3	340	395	440	13 5	15 7	17 5
2/0 ACSR 6/1	290	385	450	11.6	15.3	17 9	395	460	510	15 7	18 3	20 3
3/0 ACSR 6/1	340	445	525	13 5	17.7	20.9	460	535	600	18 3	21.3	23 9
4/0 ACSR 6/1	395	520	610	15 7	20.7	24.3	540	625	695	21 5	24.9	27 7
336 4 ACSR 26/7	540	715	840	21 5	28 5	33.5	740	860	960	29.5	34 3	38.2
477 ACSR 26/7	675	900	1065	26 9	35.9	42 4	930	1090	1215	37 0	43 4	48 4
795 ACSR 36/1	925	1235	1460	36 8	49 2	58.2	1275	1490	1665	50 8	59.4	66.3
@ 100 DEG C--->	1140			45 4								
795 ACSR 26/7	950	1270	1505	37 8	50.6	60.0	1310	1535	1720	52 2	61.2	68.5
@ 100 DEG C--->	1175			46 8								
CABLES 25KV												
795 HENDRIX AL "HDP" (Tc=85,Ta =40,W=2'/s)	850	850	850	33 9	33 9	33.9	850	850	850	33 9	33.9	33.9
795 HENDIX AL "LDP" (Tc=75,Ta =40,W=2'/s)	747	747	747	29 8	29.8	29.8	747	747	747	29.8	29 8	29.8
1250MCM "AL" 3-1/C (BURIED,RHO=90,PIC) (Tc=75,Ta(Earth)=20)	751 100%LF	862 75%LF	998 50%LF	29.9	34.3	39 8	751 100%LF	862 75%LF	998 50%LF	29 9	34.3	39.8
1250MCM "CU" 3-1/C (BURIED,RHO=90,PIC) (Tc=75,Ta(Earth)=20)	934 100%LF	1074 75%LF	1242 50%LF	37 2	42 8	49 5	934 100%LF	1074 75%LF	1242 50%LF	37.2	42.8	49 5
1000MCM "CU" 3-1/C (IN AIR-BUS TIE CBL) (Tc=75,Ta(Air)=40)	826	826	826	32 9	32.9	32 9	826	826	826	32 9	32.9	32 9

NOTES
(1) N = NORMAL RATING, LTE = LONG TERM EMERGENCY RATING, STE = SHORT TERM EMERGENCY RATING
(2) N = CONTINUOUS, LTE = 12 HOURS IN SUMMER, 4 HOURS IN WINTER, STE = 15 MINUTES
(3) ABOVE RATINGS ARE THERMAL RATINGS OF CONDUCTORS AND NOT LIMITED BY ANY OTHER ELEMENT OR SAG LIMITATIONS

THERMAL RATINGS OF DISTRIBUTION "Copper" CONDUCTORS AT 23KV

TABLE #2 PAGE 4

CONDUCTOR TEMPERATURES DEGREE C N=80 LTE=110, STE=125

SUMMER AMBIENT = 100 DEGREE F(37.7 DEG C), WINTER AMBIENT = 50 DEGREE F (10 DEG C)

WIND VELOCITY = 3 FEET/SECOND

SOLAR EFFECT 5 550(S)/2.410 (W)

	RATING IN SUMMER @23 KV						RATING IN WINTER @23 KV					
CONDUCTOR SIZE	N AMPS	LTE AMPS	STE AMPS	N MVA	LTE MVA	STE MVA	N AMPS	LTE AMPS	STE AMPS	N MVA	LTE MVA	STE MVA
#4CU 7STR	170	220	240	3.8	8.3	9.6	230	265	280	9.2	10.6	11.2
#2 CU 7 STR	230	300	325	9.2	12.0	12.9	310	360	380	12.3	14.3	15.1
#1 CU 7 STR	270	350	380	10.8	13.9	15.1	360	420	445	14.3	16.7	17.7
1/0 CU 19 STR	315	410	445	12.5	16.3	17.7	420	490	520	16.7	19.5	20.7
2/0 CU 7 STR	365	475	520	14.5	18.9	20.7	490	570	605	19.5	22.7	24.1
4/0 CU 7 STR	490	645	705	19.5	25.7	28.1	665	775	825	26.5	30.9	32.9
250 MCM CU 19 STR	550	725	790	21.9	28.9	31.5	745	870	925	29.7	34.7	36.8
300 MCM CU 19 STR	615	815	895	24.5	32.5	35.7	840	980	1040	33.5	39.0	41.4
350 MCM CU 19 STR	680	900	990	27.1	35.9	39.4	930	1085	1155	37.0	43.2	46.0
500 MCM CU 37 STR	855	1140	1250	34.1	45.4	49.8	1175	1375	1455	46.8	54.8	58.0
700 MCM CU 37 STR	1055	1410	1545	42.0	56.2	61.5	1455	1705	1810	58.0	67.9	72.1
750 MCM CU 37 STR	1100	1470	1615	43.8	58.6	64.3	1520	1780	1890	60.6	70.9	75.3

NOTES:

(1) N = NORMAL RATING, LTE = LONG TERM EMERGENCY RATING, STE = SHORT TERM EMERGENCY RATING

(2) N = CONTINUOUS, LTE = 12 HOURS IN SUMMER 4 HOURS IN WINTER, STE = 15 MINUTES

(3) ABOVE RATINGS ARE THERMAL RATINGS OF CONDUCTORS AND NOT LIMITED BY ANY OTHER ELEMENT OR SAG LIMITATIONS

TABLE 2A

HENDRIX SPACER CABLE RATINGS, AMPS, NORMAL

CNDR SIZE	AMPACITY SUN NO WIND	AMPACITY NO SUN NO WIND	AMPACITY SUN WIND	AMPACITY NO SUN WIND	R-ac Ohms/Kft	Xi Ohms/Kft	Xc Megohms-Kft
4	68	101	115	132	.5076	.1161	.741
2	90	134	151	175	.3193	.1108	.705
1	104	154	174	202	.2532	.1082	.687
1/0	119	178	200	233	.2007	.1055	.669
2/0	138	206	229	269	.1592	.1028	.651
3/0	159	239	264	311	.1263	.1002	.632
4/0	183	278	304	359	.1002	.0975	.614
250	204	310	337	400	.0849	.0943	.599
266.8	212	324	350	417	.0795	.0936	.594
300	228	349	376	449	.0708	.0922	.585
336.4	245	376	403	483	.0632	.0909	.576
350	251	386	413	495	.0607	.0905	.573
397.5	272	420	447	537	.0535	.0890	.563
400	273	421	448	539	.0532	.0889	.563
477	305	473	499	603	.0447	.0869	.549
500	314	488	514	621	.0426	.0864	.545
550	334	520	544	660	.0388	.0853	.538
556.5	336	524	548	665	.0384	.0851	.537
600	353	551	574	698	.0356	.0839	.530
636	366	573	595	724	.0336	.0832	.526
650	371	581	603	735	.0329	.0830	.524
700	389	610	630	770	.0306	.0821	.518
750	406	638	657	805	.0286	.0813	.513
795	421	663	681	835	.0271	.0807	.508
800	423	666	683	838	.0269	.0806	.508
900	455	720	734	903	.0240	.0791	.498
954	472	748	760	937	.0227	.0784	.494
1000	486	772	781	965	.0217	.0779	.490
1033.5	496	789	797	986	.0210	.0775	.488
1590	646	1042	1030	1291	.0141	.0725	.454

Operating temperature, Degrees C	75
Ambient temperature, Degrees C	40
Conductor material	Aluminum
Percent Conductivity	61
Strand type	Compact
Stranding increment	1.02
Insulation thickness	.165
Frequency, Hz	60
Elevation, Ft	0
Air velocity, Ft/Sec	3
Thermal resistivity of insulation	350
Coefficient of solar absorption	.9
Coefficient of emissivity	.9
Atmosphere	Clear
Local sun time	12:00 Noon
Degrees north latitude	30
Altitude of the sun, Degrees	83
Azimuth of the sun, Degrees	180
Azimuth of line, Degrees	270
Line direction	East-West

AMPSAA2 VERSION 1.22 FEBRUARY 29, 1996 SAL

NORMAL

TABLE 2A

HENDRIX SPACER CABLE RATINGS, AMPS, LONG TERM EMERGENCY (LTE)

MAR-04-97 13:58 FROM:-..... ID:508 748 4473 6502 PAGE 5/6

CNDR SIZE	AMPACITY SUN NO WIND	NO SUN NO WIND	SUN WIND	NO SUN WIND	R-ac Ohms/Kft	Xi Ohms/Kft	Xc Megohms-Kft
4	112	132	155	167	.5494	.1161	.741
2	148	175	204	221	.3456	.1108	.705
1	171	202	235	255	.2741	.1082	.687
1/0	198	234	271	295	.2172	.1055	.669
2/0	229	271	313	340	.1724	.1028	.651
3/0	265	314	360	393	.1367	.1002	.632
4/0	306	364	416	455	.1085	.0975	.614
250	342	407	463	507	.0919	.0943	.599
266.8	357	425	482	528	.0861	.0936	.594
300	385	459	518	569	.0766	.0922	.585
336.4	414	494	557	612	.0683	.0909	.576
350	425	507	571	627	.0657	.0905	.573
397.5	462	552	618	680	.0579	.0890	.563
400	463	554	620	683	.0575	.0889	.563
477	520	622	693	764	.0483	.0869	.549
500	536	642	713	787	.0461	.0864	.545
550	570	683	757	837	.0420	.0853	.538
556.5	575	689	763	843	.0415	.0851	.537
600	604	725	800	886	.0385	.0839	.530
636	628	753	830	919	.0364	.0832	.526
650	637	764	842	932	.0356	.0830	.524
700	668	803	881	977	.0331	.0821	.518
750	699	840	920	1021	.0309	.0813	.513
795	726	873	954	1060	.0292	.0807	.508
800	729	877	958	1064	.0290	.0806	.508
900	788	948	1031	1148	.0259	.0791	.498
954	818	986	1069	1191	.0245	.0784	.494
1000	844	1017	1101	1227	.0234	.0779	.490
1033.5	862	1039	1124	1253	.0227	.0775	.488
1590	1136	1376	1466	1645	.0152	.0725	.454

Operating temperature, Degrees C	100
Ambient temperature, Degrees C	40
Conductor material	Aluminum
Percent Conductivity	61
Strand type	Compact
Stranding increment	1.02
Insulation thickness	.165
Frequency, Hz	60
Elevation, Ft	0
Air velocity, Ft/Sec	3
Thermal resistivity of insulation	350
Coefficient of solar absorption	.9
Coefficient of emissivity	.9
Atmosphere	Clear
Local sun time	12:00 Noon
Degrees north latitude	30
Altitude of the sun, Degrees	83
Azimuth of the sun, Degrees	180
Azimuth of line, Degrees	270
Line direction	East-West

AMPSAA2 VERSION 1.22 FEBRUARY 29, 1996 SAL

LTE

TABLE 3

COMMONWEALTH ELECTRIC COMPANY

CALCULATION SHEET

Page No. _____
Preliminary _____
Item _____

Location: SCADA & ENGINEERING
CBA No. _____ W.O. No. _____
Subject: CABLE Ampacities
Date: 6/22/87 By: MTW
Checked _____ By _____
Based on _____
Revised: 9/1/87 By: MTW

Cable Ampacities

Paper + Lead - Triplexed - 75 L.F. - 90C - 20C - RHO-9

SIZE	1	3	6	9	CKTS in Duct bank
4/0	305	261	219	201	
300	372	314	262	240	
500	495	413	340	309	
800*	631	499	395	355	

390

425

* Three Conductor Cable

Kerite - Triplexed - 75 LF 90C - 20C - RHO - 90

SIZE	1	3	4	CKTS in Duct bank
4/0	317	271	253	
300	386	327	305	
500	515	432	401	
750	640	531	491	

370

EPR - Triplexed - 75 LF - 90C - 20C - RHO - 90

SIZE	1	3	6	9	CKTS in Duct bank
4/0	317	268	223	204	
300	383	321	265	241	
500	504	417	340	309	
750	590	490	400	355	

370

OD 308 Rev.7-82

COM Electric

Interoffice Correspondence

Subject Thermal Overload Ratings for the Pine Street - Acushnet 13.2kV UG Tie Circuits

Date 17 November 1992

To J. J. Keane
H. W. Eklund
T. E. Davis

Organization and Area

ENGINEERING & CONSTRUCTION
Trans. & Dist. Planning

Attached, please find the results of a limiting-element analysis that has been conducted to determine the thermal ratings for the five (5) 13.2kV tie circuits between the Pine Street and Acushnet substations. A computer program was used to simulate actual duct bank cross-sections, cable configurations, and loadings in a manhole-to-manhole fashion to determine the two (2) most limiting locations for cable ampacity. The results are summarized in Table #1. Cross-sectional views of the limiting duct banks appear in Figures #1 and #2. An overview of the the North-end 13.2kV feeder system is shown in Figure #3 with the approximate locations of the limiting areas indicated.

Referencing Table #1, subject to a maximum copper conductor temperature of 90 C and a Summer Earth temperature of 20 C, the variation in cable ampacities is shown as a function of time (1, 2, 4, 12, and 100-hour periods) and as a function of varying Earth thermal resistivity (60, 75, and 90 thermal ohms) for both limiting locations. For the course of this study, lead-shielded paper cable was represented, using 3.5" to 4" ducts with a 4.8" to 5.5" center-to-center duct spacing. The duct material was asphaltic fiber with a thermal impedance of 3.60 thermal ohms. Ratings which are lower than the ones presently used for rating these cables are flagged in the table, and become prevalent for RHO = 90 thermal ohms.

At present, it is unclear what values of Earth thermal resistivity, Earth ambient temperature, and maximum conductor temperature would be acceptable to the Company for the calculation of emergency ratings for these cables. Could Engineering please recommend appropriate values for these following quantities:

1. An average value of Earth thermal resistivity for the areas traversed by these cables. A survey of ECNE CT-4 members showed that New England utilities typically use 60 to 120 thermal ohms for the thermal impedance of Earth.

2. An acceptable maximum copper conductor temperature for long-term and short-term emergency loading conditions. A survey of ECNE CT-4 members showed that New England utilities typically use 90-130 C for maximum emergency-condition copper conductor temperatures.

3. The maximum acceptable time duration for loading cables to the conductor temperature determined in (2) above.

4. An acceptable value for Earth ambient temperature. Typical values vary from 10 C to 25 C.

Thank you for your assistance in this matter. If you have any questions, please contact me at ext. 3467.

Sincerely,

Keith L. Jones

Keith L. Jones
Associate Engineer

cc: C. P. Salamone
S. D. Parekh
D. M. Perry
M. T. Wall
J. R. Gomber
T. Fryzel
W. C. Newell

4 Attachments

NEW BEDFORD DISTRICT 13.2KV PINE-ACUSHNET TIES — REV 0 11/16/92 KLJ

TABLE #1

CABLE RATING RESTRICTIONS AND LIMITING ELEMENTS — PAGE 1 OF 2

THERMAL CABLE RATINGS FOR TWO (2) LIMITING LOCATIONS
IN THE PINE STREET - ACUSHNET 13.2KV UNDERGROUND CABLE SYSTEM.

RATINGS CALCULATED USING 'CIDAC' COMPUTER PROGRAM FOR PINE -
ACUSHNET TIED CONDITION.

RATINGS CALCULATED FOR VARIOUS EARTH THERMAL IMPEDANCES (60, 75, & 90
THERMAL OHMS) AND AS A FUNCTION OF TIME (1, 2, 4, 12, & 100 HOURS)

RATINGS CALCULATED ASSUMING CIRCUITS HAVE BEEN TIED AND CARRYING
TIED-CONDITION LOADINGS FOR A LONG TIME (> 12 HOURS)

ASSUMPTIONS: SUMMER EARTH TEMP = 20 C PRELOAD LEVEL = 100% (FOR THE 5 TIE CKTS)
MAXIMUM CONDUCTOR TEMP = 90 C LOAD FACTOR = 100% (FOR THE 5 TIE CKTS)
NORMAL CONDUCTOR TEMP = 80 C

DUCT OUTER DIAMETER = 3.5 "
DUCT SPACING = 4.8 "
DUCT THERMAL IMPEDANCE = 3.6 THERMAL OHMS
DUCT MATERIAL = ORANGEBERG (ASPHALTIC FIBER)

LOCATION #1 MANHOLE #735 ON BELLEVILLE AVENUE - WEST SIDE OF ACUSHNET RIVER

CIRCUIT (PINE-ACUSH)	EARTH RHO = 60					EARTH RHO = 75					EARTH RHO = 90				
	HOURS					HOURS					HOURS				
	1	2	4	12	100	1	2	4	12	100	1	2	4	12	100
	AMPERES					AMPERES					AMPERES				
24-86	581	494	447	423	382	521	445	403	381	340	453	390	356	337	302
23-87/92	538	463	423	402	376	474	414	382	365	341	401	360	338	326	309
66-81	740	610	535	492	447	662	549	484	446	402	573	482	429	397	360
89N-89S	576	495	452	430	393	517	448	410	390	355	450	395	365	348	319
110-84	586	508	467	447	414	533	467	431	412	381	475	421	392	376	349
	MVA					MVA					MVA				
24-86	13.3	11.3	10.2	9.7	8.7	11.9	10.2	9.2	8.7	7.8*	10.4	8.9	8.1	7.7*	6.9*
23-87/92	12.3	10.6	9.7	9.2	8.6	10.8	9.5	8.7	8.3	7.8*	9.2	8.2	7.7*	7.5*	7.1*
66-81	16.9	13.9	12.2	11.2	10.2	15.1	12.6	11.1	10.2	9.2	13.1	11.0	9.8	9.1*	8.2*
89N-89S	13.2	11.3	10.3	9.8	9.0	11.8	10.2	9.4	8.9	8.1	10.3	9.0	8.3	8.0	7.3*
110-84	13.4	11.6	10.7	10.2	9.5	12.2	10.7	9.9	9.4	8.7	10.9	9.6	9.0	8.6	8.0

* = VIOLATIONS OF RATINGS USED PREVIOUSLY (BOTTOM OF PAGE 2)

DISTRICT 13.2KV PINE-ACUSHNET TIES REV 0 11/16/92 KLJ

RESTRICTIONS AND LIMITING ELEMENTS PAGE 2 OF 2

NHOLE #368 AT WATER & WILLIAM STREETS - NEAR PINE ST. SUBSTATION

	EARTH RHO = 60				EARTH RHO = 75					EARTH RHO = 90				
	HOURS				HOURS					HOURS				
	2	4	12	100	1	2	4	12	100	1	2	4	12	100
	AMPERES				AMPERES					AMPERES				
3	502	465	446	415	518	459	428	411	383	457	412	389	375	353
1	478	439	419	395	496	436	404	388	366	434	391	367	355	337
9	484	436	412	383	515	441	400	378	350	455	395	361	343	317
	MVA				MVA					MVA				
1	11.5	10.6	10.2	9.5	11.8	10.5	9.8	9.4	8.8	10.4	9.4	8.9	8.6	8.1
6	10.9	10.0	9.6	9.0	11.3	10.0	9.2	8.9	8.4	9.9	8.9	8.4	8.1	7.7*
0	11.1	10.0	9.4	8.8	11.8	10.1	9.1	8.6	8.0	10.4	9.0	8.3	7.8 *	7.2*

* = VIOLATIONS OF RATINGS USED PREVIOUSLY (TABLE BELOW)

SIZE	AMPS	MVA
750 MCM CU	622	9.6
500 MCM CU	347	7.9
400 MCM CU	315	7.2
300 MCM CU	271	6.2

FIGURE #1

Location #1: Manhole # 735 on Belleville Avenue near Acushnet Sub

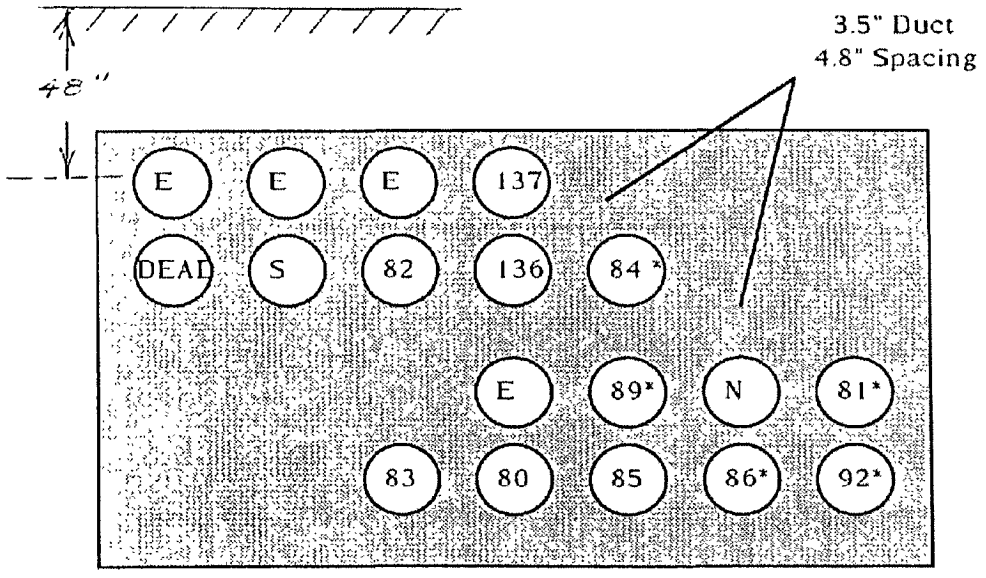

* = Tie Circuits E = Empty duct N = Neutral S=Secondary

Circuit	Size	Normal Load	Emergency Load	
83	500 Triplex	9.8 Amps	9.8 Amps	
80	500 Triplex	31.8 Amps	31.8 Amps	
85	500 Triplex	124.5 Amps	124.5 Amps	
86*	500 Triplex	199.7 Amps	270.4 Amps	
92*	500 3-condr	198.0 Amps	351.0 Amps	
89*	500 Triplex	228.9 Amps	315.7 Amps	
81*	750 3-condr	111.8 Amps	343.0 Amps	
82	500 Triplex	113.5 Amps	113.5 Amps	
136	4/0 3-condr	100.0 Amps	100.0 Amps	(3.74 kV)
84*	500 Triplex	184.5 Amps	184.5 Amps	
137	300 3-condr	150.0 Amps	150.0 Amps	(3.74 kV)

FIGURE #2

Location #2: Manhole #368 at Water & William Streets - near Pine Street

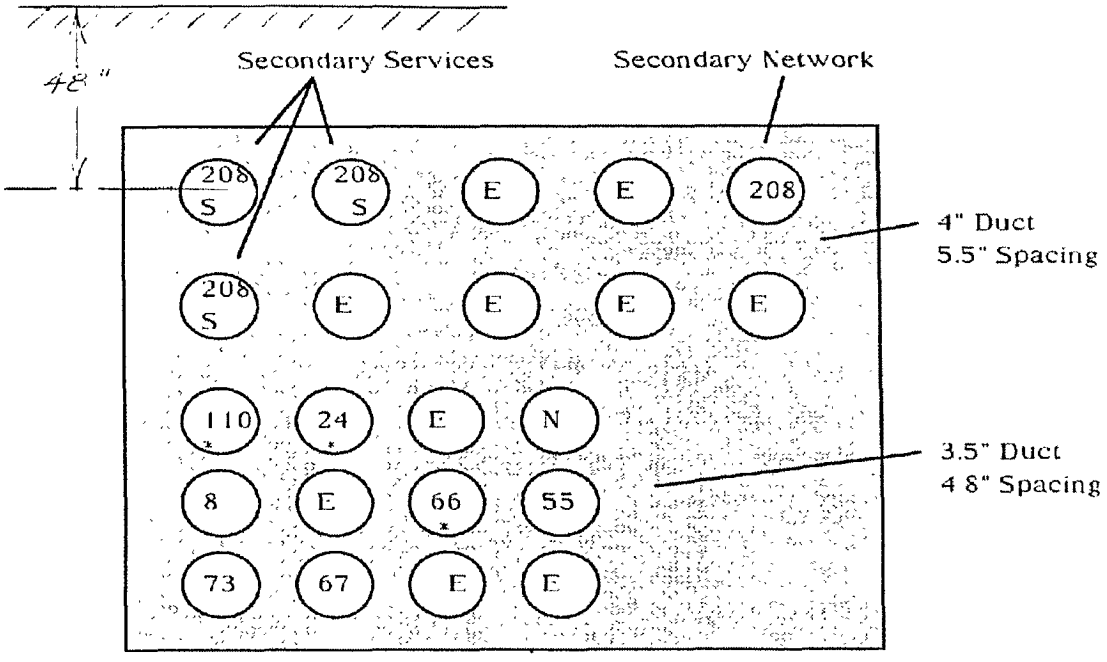

* = Tie Circuits E = Empty duct

Circuit	Size	Normal Load	Emergency Load
55	500 Triplex	156.3 Amps	156.3 Amps
67	500 Triplex	190.9 Amps	190.9 Amps
73	500 Triplex	76.5 Amps	76.5 Amps
66 *	500 Triplex	155.5 Amps	332.9 Amps
8	500 Triplex	149.5 Amps	149.5 Amps
110 *	500 3-condr	80.4 Amps	359.6 Amps
24 *	500 Triplex	201.6 Amps	256.7 Amps
208V Netw	500 3-condr	100 Amps/leg	100 Amps/leg
208V Secdy	4/0 3-condr	Negligible	Negligible

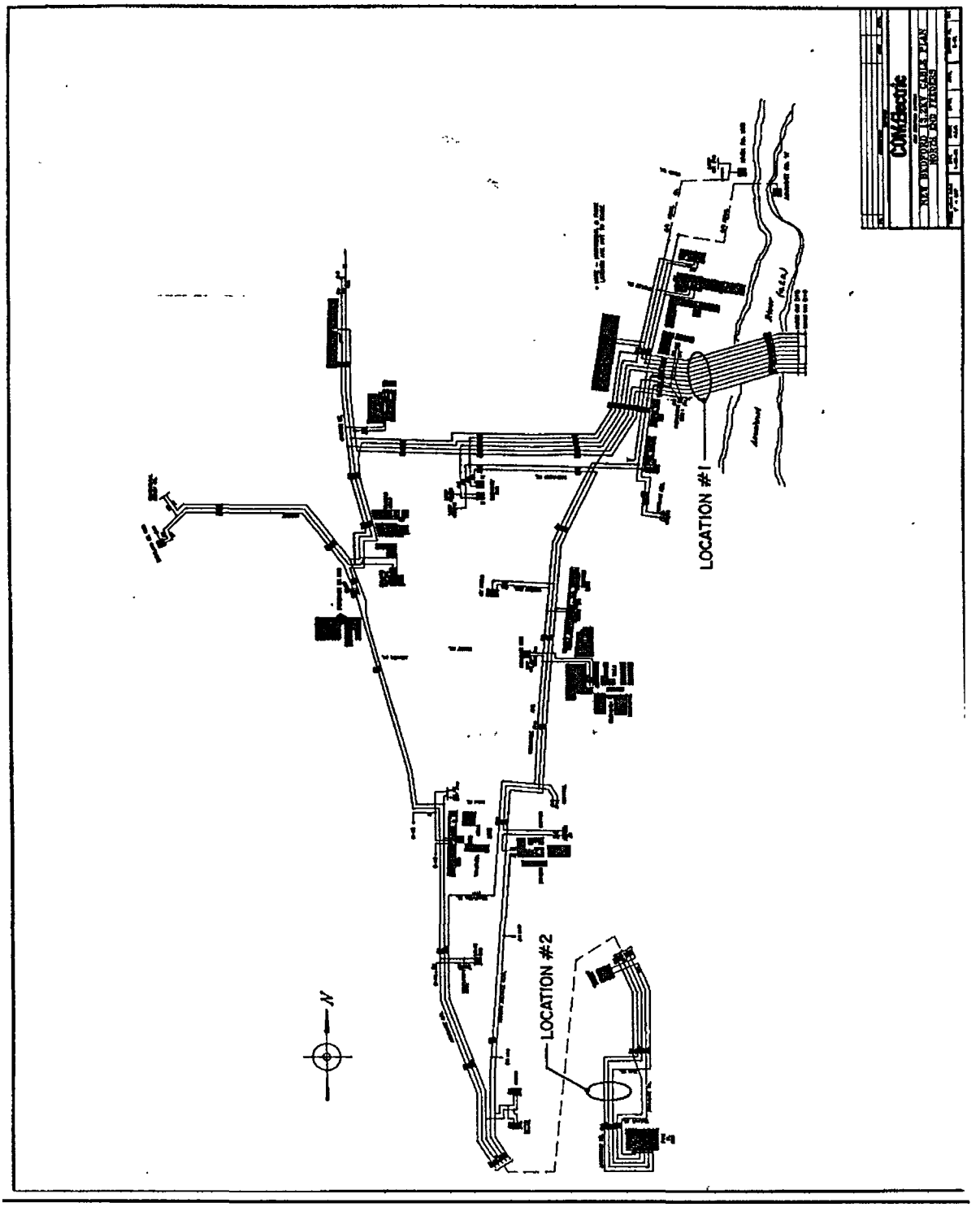
COMSectric
LOCATION #1
LOCATION #2
N

Available Short Circuit Duties

Referencing **Table #4,** a listing of 345kV, 115kV, 23kV and 13.2kV station fault currents has been calculated for all three operating Districts. These have been calculated under the following conditions:

1. Both Mirant Canal units in-service
2. Both American Ref/fuel (SEMASS) in-service
3. Both El Paso Electric (Dartmouth Power) units in-service
4. EMI Tiverton units in-service
5. EMI Dighton unit in-service
6. Excelon Fore River (Edgar) in-service
7. Brayton Point units #1, #2, #3, #4 in-service
8. ANP Bellingham units in-service
9. ANP Blackstone units in-service
10. Excelon Mystic Units #7, #8 in-service
11. Salem Harbor Units 1,2,3, and 4 in-service
12. Mirant Kendall Repowering in-service
13. FPL Rise in-service
14. Lake Road in-service

A comparison of these fault duties with main breaker, feeder breaker, and circuit switcher interrupting capabilities is suggested to pinpoint overdutied equipment. Care should be taken in comparing particular results with any particular circuit breaker rating, as these are bolted bus fault values. For locations where high bolted fault values may appear to exceed equipment interrupting duties, an analysis of the station configuration would have to be make to ascertain the actual fault current flow that a particular interrupting device would actually "see," subject to any X/R ratio or other decrement factors that are applicable.

TABLE #4 – EHV System Available Fault Duties

NSTAR South - EHV System Page 1/1

LOCATION	KV	BKR RATING	FAULT TYPE	Year 2003	Year 2004
Canal	345	37,000	3Ph	18,800	17,800
			2Ph-Gnd	20,500	19,800
			1Ph-Gnd	21,200	20,400
Carver	345	40,000	3Ph	13,600	13,000
			2Ph-Gnd	13,500	13,000
			1Ph-Gnd	12,000	11,600
Jordan Road Tap	345		3Ph	20,300	19,500
			2Ph-Gnd	20,800	20,000
			1Ph-Gnd	19,300	18,600
Pilgrim (Entergy)	345	40,000	3Ph	19,500	18,900
			2Ph-Gnd	20,200	19,600
			1Ph-Gnd	19,900	19,200

NSTAR South - Plymouth District

LOCATION	KV	BKR RATING	FAULT TYPE	Year 2003	Year 2004
Carver	115	40,000	3Ph	20,700	19,900
			2Ph-Gnd	21,600	20,700
			1Ph-Gnd	21,700	20,800
Brook Street	115	22,000	3Ph	13,300	12,500
			2Ph-Gnd	12,400	11,800
			1Ph-Gnd	9,300	9,000
West Pond West 116	115		3Ph	7,800	7,500
			2Ph-Gnd	7,200	6,900
			1Ph-Gnd	5,000	4,800
West Pond West 116	24		3Ph	8,100	8,400
			2Ph-Gnd	9,600	10,000
			1Ph-Gnd	10,000	10,300
West Pond East 117	115		3Ph	n/a	6,600
			2Ph-Gnd	n/a	5,900
			1Ph-Gnd	n/a	4,400
West Pond East 117	24		3Ph	8,600	9,000
			2Ph-Gnd	10,500	10,900
			1Ph-Gnd	10,700	11,200
Kingston	115		3Ph	11,600	10,900
			2Ph-Gnd	10,800	10,100
			1Ph-Gnd	7,800	7,500
Kingston West 191	24		3Ph	3,500	3,500
			2Ph-Gnd	4,000	4,000
			1Ph-Gnd	4,200	4,200
Kingston East 117	24		3Ph	3,400	3,400
			2Ph-Gnd	3,900	3,900
			1Ph-Gnd	4,100	4,100
Duxbury East 117	115		3Ph	7,500	7,100
			2Ph-Gnd	6,900	6,500
			1Ph-Gnd	4,700	4,600
Duxbury 1 117	24		3Ph	7,700	7,900
			2Ph-Gnd	9,000	9,300
			1Ph-Gnd	9,300	9,600
Duxbury West 191	115		3Ph	n/a	6,400
			2Ph-Gnd	n/a	5,700
			1Ph-Gnd	n/a	4,200
Duxbury 2 191	24		3Ph	7,400	7,700
			2Ph-Gnd	8,900	9,200
			1Ph-Gnd	9,100	9,500

TABLE #4 – Plymouth District Available Fault Duties

NSTAR South - Plymouth District

LOCATION	KV	BKR RATING	FAULT TYPE	Year 2003	Year 2004
Marshfield	115		3Ph	5,500	5,200
			2Ph-Gnd	5,000	4,700
			1Ph-Gnd	3,500	3,400
Marshfield	24		3Ph	3,300	3,300
			2Ph-Gnd	3,800	3,800
			1Ph-Gnd	4,000	4,000
Semass Sw Sta	115		3Ph	18,100	18,500
			2Ph-Gnd	17,700	17,800
			1Ph-Gnd	16,300	15,600
Rochester 112	115		3Ph	12,000	12,000
			2Ph-Gnd	11,500	11,200
			1Ph-Gnd	9,300	8,100
Rochester 114	115		3Ph	n/a	11,200
			2Ph-Gnd	n/a	10,500
			1Ph-Gnd	n/a	7,600
Rochester 112	13.2		3Ph	5,600	5,600
			2Ph-Gnd	5,800	5,700
			1Ph-Gnd	5,900	5,700
Rochester 114	13.2		3Ph	2,900	3,000
			2Ph-Gnd	3,000	3,000
			1Ph-Gnd	3,100	3,000
Tremont	115	20,000 25,000 40&50K	3Ph	18,400	19,100
			2Ph-Gnd	18,000	18,400
			1Ph-Gnd	16,400	15,500
Tremont West	24		3Ph	3,200	3,200
			2Ph-Gnd	3,800	3,800
			1Ph-Gnd	3,900	3,900
Tremont East	24		3Ph	3,200	3,200
			2Ph-Gnd	3,800	3,700
			1Ph-Gnd	4,000	3,900
Wareham 108	115		3Ph	13,800	14,800
			2Ph-Gnd	13,300	14,100
			1Ph-Gnd	10,700	10,900
Wareham 113 (Normally Open)	115		3Ph	n/a	14,700
			2Ph-Gnd	n/a	14,000
			1Ph-Gnd	n/a	10,900
Wareham 108	24		3Ph	8,000	8,400
			2Ph-Gnd	8,900	9,400
			1Ph-Gnd	9,200	9,700

TABLE #4 – Plymouth District Available Fault Duties

NSTAR South - Plymouth District

LOCATION	KV	BKR RATING	FAULT TYPE	Year 2003	Year 2004
Valley 113	115	No Bkrs	3Ph	n/a	16,800
			2Ph-Gnd	n/a	16,200
			1Ph-Gnd	n/a	13,100
Valley 113	24		3Ph	4,000	
			2Ph-Gnd	3,500	
			1Ph-Gnd	xxx 25	
Valley 108	115	No Bkrs	3Ph	14,300	16,900
			2Ph-Gnd	13,800	16,200
			1Ph-Gnd	11,300	13,100
Valley 108	24		3Ph	4,800	
			2Ph-Gnd	4,100	
			1Ph-Gnd	xxx 25	
Manomet	115		3Ph	5,100	5,300
			2Ph-Gnd	4,800	4,900
			1Ph-Gnd	3,600	3,300
Manomet	24		3Ph	3,200	3,300
			2Ph-Gnd	4,100	3,800
			1Ph-Gnd	4,200	3,900
Horsepond 108	115		3Ph	15,200	18,000
			2Ph-Gnd	14,800	17,500
			1Ph-Gnd	12,600	14,400
Horsepond 113	115		3Ph	15,200	17,900
			2Ph-Gnd	14,800	17,400
			1Ph-Gnd	12,600	14,400

TABLE #4 – Plymouth District Available Fault Duties

NSTAR South - New Bedford District

LOCATION	KV	BKR RATING	FAULT TYPE	Year 2003	Year 2004
Pine Street	115		3Ph	10,600	10,500
			2Ph-Gnd	10,500	9,800
			1Ph-Gnd	10,100	7,000
Pine Street	13.2		3Ph	30,700	31,300
			2Ph-Gnd	33,700	34,200
			1Ph-Gnd	35,000	35,300
Pine Street - Load Side of Line Reactor	13.2		3Ph	8,600	8,700
			2Ph-Gnd	8,800	8,900
			1Ph-Gnd	8,900	9,000
Acushnet	115		3Ph	11,400	11,300
			2Ph-Gnd	11,300	10,500
			1Ph-Gnd	10,600	7,500
Acushnet North	13.2		3Ph	16,900	17,000
			2Ph-Gnd	17,700	17,700
			1Ph-Gnd	18,100	18,000
Acushnet North (Load Side of 5% Reactor)	13.2		3Ph	n/a	6,700
			2Ph-Gnd	n/a	6,800
			1Ph-Gnd	n/a	6,700
Acushnet North (Load Side of 4% Reactor)	13.2		3Ph	n/a	7,600
			2Ph-Gnd	n/a	7,700
			1Ph-Gnd	n/a	7,700
Acushnet North (Load Side of 3% Reactor)	13.2		3Ph	8,400	8,500
			2Ph-Gnd	8,600	8,600
			1Ph-Gnd	8,700	8,700
Acushnet South	13.2		3Ph	16,900	17,000
			2Ph-Gnd	17,700	17,600
			1Ph-Gnd	18,100	18,000
Acushnet South (Load Side of 5% Reactor)	13.2		3Ph	n/a	6,300
			2Ph-Gnd	n/a	6,400
			1Ph-Gnd	n/a	6,500
Acushnet South (Load Side of 4% Reactor)	13.2		3Ph	n/a	7,200
			2Ph-Gnd	n/a	7,300
			1Ph-Gnd	n/a	7,400
Acushnet South (Load Side of 3% Reactor)	13.2		3Ph	n/a	8,500
			2Ph-Gnd	n/a	8,600
			1Ph-Gnd	n/a	8,700
Arsene	115		3Ph	7,700	7,600
			2Ph-Gnd	7,300	7,000
			1Ph-Gnd	5,700	4,800
Arsene	13.2		3Ph	10,000	10,000
			2Ph-Gnd	10,600	10,400
			1Ph-Gnd	10,900	10,600
Wing Lane	115		3Ph	11,100	11,000
			2Ph-Gnd	10,900	10,200
			1Ph-Gnd	9,800	7,300
Wing Lane	13.2		3Ph	10,500	10,500
			2Ph-Gnd	10,900	10,700
			1Ph-Gnd	11,200	10,900

TABLE #4 – New Bedford District Available Fault Duties

NSTAR South - New Bedford District

LOCATION	KV	BKR RATING	FAULT TYPE	Year 2003	Year 2004
Crystal Spring	115		3Ph	7,500	7,400
			2Ph-Gnd	7,000	6,800
			1Ph-Gnd	5,700	4,800
Crystal Spring	13.2		3Ph	6,100	6,100
			2Ph-Gnd	6,400	6,300
			1Ph-Gnd	6,500	6,300
Industrial Park	115	25,000	3Ph	13,100	12,600
			2Ph-Gnd	12,700	11,800
			1Ph-Gnd	9,900	8,500
Industrial Park A	13.2		3Ph	11,400	11,400
			2Ph-Gnd	11,700	11,700
			1Ph-Gnd	12,000	11,800
Industrial Park B	13.2		3Ph	11,500	11,500
			2Ph-Gnd	11,800	11,800
			1Ph-Gnd	12,000	11,900
High Hill	115	40,000	3Ph	14,300	13,700
			2Ph-Gnd	14,100	13,000
			1Ph-Gnd	11,800	10,700
Dartmouth Sw Sta	115		3Ph	10,900	10,400
			2Ph-Gnd	10,500	9,900
			1Ph-Gnd	9,400	8,700
Cross Road 109 (West)	115		3Ph	n/a	7,500
			2Ph-Gnd	n/a	6,800
			1Ph-Gnd	n/a	5,300
Cross Road West (T1-12 OP)	13.2		3Ph	6,000	6,000
			2Ph-Gnd	6,200	6,200
			1Ph-Gnd	6,300	6,200
Cross Road 111 (East)	115		3Ph	9,300	9,000
			2Ph-Gnd	8,900	8,400
			1Ph-Gnd	7,500	7,000
Cross Road East (T1-12 OP)	13.2		3Ph	15,500	14,300
			2Ph-Gnd	17,500	14,900
			1Ph-Gnd	16,500	15,200
Fisher Road	115		3Ph	5,200	5,000
			2Ph-Gnd	4,900	4,600
			1Ph-Gnd	3,600	3,400
Fisher Road XFMR #2 (ASEA) In-Service	13.2		3Ph	5,800	5,800
			2Ph-Gnd	6,100	6,000
			1Ph-Gnd	6,100	6,100
Bell Rock	115		3Ph	19,700	18,200
			2Ph-Gnd	20,500	17,700
			1Ph-Gnd	16,900	15,000
Bell Rock	34.5		3Ph	3,500	3,500
			2Ph-Gnd	3,600	3,600
			1Ph-Gnd	3,600	3,600
Assonet (OH)	34.5		3Ph	3,500	2,600
			2Ph-Gnd	3,600	2,500
			1Ph-Gnd	3,600	2,100
Assonet	13.2		3Ph	n/a	4,300
			2Ph-Gnd	n/a	4,200
			1Ph-Gnd	n/a	3,700

TABLE #4 – New Bedford District Available Fault Duties

NSTAR South - Cape District

LOCATION	KV	BKR RATING	FAULT TYPE	Year 2003	Year 2004
Bourne	115	40000	3Ph	18,200	23,700
			2Ph-Gnd	18,100	24,000
		50000	1Ph-Gnd	16,500	22,200
Barnstable	115	40000	3Ph	9,700	10,100
			2Ph-Gnd	9,400	9,600
			1Ph-Gnd	7,800	6,900
Otis	115	No Bkrs	3Ph	12,100	13,900
			2Ph-Gnd	11,700	13,400
			1Ph-Gnd	9,200	10,300
Otis	24		3Ph	4,800	6,100
			2Ph-Gnd	5,200	6,400
			1Ph-Gnd	5,400	6,500
Falmouth Tap	115	40000	3Ph	8,300	8,900
			2Ph-Gnd	7,900	8,400
			1Ph-Gnd	5,800	5,900
Falmouth East	115		3Ph	5,700	5,900
			2Ph-Gnd	5,300	5,500
			1Ph-Gnd	3,700	3,700
Falmouth East	24		3Ph	7,100	7,100
			2Ph-Gnd	8,800	8,800
			1Ph-Gnd	9,000	9,100
Falmouth West	115		3Ph	n/a	5,300
			2Ph-Gnd	n/a	4,900
			1Ph-Gnd	n/a	3,600
Falmouth West	24		3Ph	8,400	9,600
			2Ph-Gnd	9,900	11,100
			1Ph-Gnd	10,300	11,500
Hatchville	115	No Bkrs	3Ph	7,800	8,200
			2Ph-Gnd	7,400	7,700
			1Ph-Gnd	5,400	5,400
Hatchville	24		3Ph	6,700	7,400
			2Ph-Gnd	7,700	8,500
			1Ph-Gnd	8,000	8,800
Mashpee	115	No Bkrs	3Ph	7,400	7,700
			2Ph-Gnd	7,000	7,200
			1Ph-Gnd	5,200	5,100
Mashpee	24		3Ph	5,200	5,800
			2Ph-Gnd	6,000	6,600
			1Ph-Gnd	6,200	6,800
Pave Paws	115	No Bkrs	3Ph	15,500	19,100
			2Ph-Gnd	15,200	18,700
			1Ph-Gnd	13,100	16,000
Pave Paws	24		3Ph	2,600	4,200
			2Ph-Gnd	2,600	4,100
			1Ph-Gnd	2,600	3,900
Lothrop Ave Elm Road	115		3Ph	4,400	4,400
			2Ph-Gnd	4,100	4,100
			1Ph-Gnd	3,400	2,800

TABLE #4 – Cape & Vineyard District Available Fault Duties

NSTAR South - Cape District

LOCATION	KV	BKR RATING	FAULT TYPE	Year 2003	Year 2004
Sandwich	115	No Bkrs	3Ph	10,600	11,700
			2Ph-Gnd	10,200	11,200
			1Ph-Gnd	8,100	8,400
Sandwich	24		3Ph	7,300	8,100
			2Ph-Gnd	8,300	9,100
			1Ph-Gnd	8,600	9,400
Hyannis Junction #1	115		3Ph	n/a	9,100
			2Ph-Gnd	n/a	8,500
			1Ph-Gnd	n/a	6,100
Hyannis West	24		3Ph	7,400	8,200
			2Ph-Gnd	8,600	9,400
			1Ph-Gnd	8,800	9,700
Hyannis Junction #2	115		3Ph	n/a	8,800
			2Ph-Gnd	n/a	8,300
			1Ph-Gnd	n/a	6,000
Hyannis East	24		3Ph	8,800	9,700
			2Ph-Gnd	10,200	11,300
			1Ph-Gnd	10,600	11,700
Harwich 119 Tap	115	No Bkrs	3Ph	5,600	5,600
			2Ph-Gnd	5,300	5,200
			1Ph-Gnd	4,500	3,500
Harwich 119	115		3Ph	n/a	4,200
			2Ph-Gnd	n/a	3,800
			1Ph-Gnd	n/a	2,600
Harwich East	24		3Ph	6,000	6,600
			2Ph-Gnd	7,000	7,600
			1Ph-Gnd	7,300	8,000
Harwich 118 Tap	115	No Bkrs	3Ph	5,600	5,600
			2Ph-Gnd	5,300	5,200
			1Ph-Gnd	4,500	3,500
Harwich 118	115		3Ph	n/a	4,400
			2Ph-Gnd	n/a	4,100
			1Ph-Gnd	n/a	2,800
Harwich West	24		3Ph	6,600	7,300
			2Ph-Gnd	8,200	9,000
			1Ph-Gnd	8,400	9,200
Orleans 119	115		3Ph	n/a	3,600
			2Ph-Gnd	n/a	3,300
			1Ph-Gnd	n/a	2,200
Orleans 1	24		3Ph	4,600	4,600
			2Ph-Gnd	5,600	5,700
			1Ph-Gnd	5,800	5,800
Orleans 118	115		3Ph	n/a	3,500
			2Ph-Gnd	n/a	3,200
			1Ph-Gnd	n/a	2,200
Orleans 2	24		3Ph	5,900	6,300
			2Ph-Gnd	7,500	7,600
			1Ph-Gnd	7,700	7,800

TABLE #4 – Cape & Vineyard District Available Fault Duties

TABLE #4 – Cape & Vineyard District Available Fault Duties

NSTAR South - Cape District

LOCATION	KV	BKR RATING	FAULT TYPE	Year 2003	Year 2004
Wellfleet	115	No Bkrs	3Ph	2,200	2,200
			2Ph-Gnd	2,100	2,000
			1Ph-Gnd	1,700	1,400
Wellfleet North (XFMR #2)	24		3Ph	3,600	3,600
			2Ph-Gnd	4,000	3,900
			1Ph-Gnd	4,100	4,000
Wellfleet South (XFMR#1)	24		3Ph	3,200	3,100
			2Ph-Gnd	3,400	3,400
			1Ph-Gnd	3,500	3,400

Summary of Results and Recommendations

Overall, the results of the 2004 T&D Operating Study indicate that performance of the NSTAR/South transmission and distribution system on both an all-lines-in and post-contingency basis is good at the 2004 Summer forecasted load levels. Several exceptions to this general observation must be made, and these are summarized below, by operating district:

New Bedford District

Acushnet Substation #612: Three underground DSS lines may exceed SCADA alarm ratings when backup up from Pine Street at Summer peak. These are the #24/#86, #89S/#89N, and #66/#81 circuit pairs. A plan to swap load off of the Highland LCU Substation #688 to either the #80 or #83 circuits will reduce load on circuits #24 and #86. Additional switching to the Industrial Park #104 circuit will reduce load on the #89 circuits during the tied condition.

Also at Acushnet, three (3) 13.2/3.74kV primary network (PNU) distribution substations have stepdown transformers exceeding top nameplate ratings, all facilities in, during Summer peak loading conditions. These are: Hathaway Substation #617 (both transformers), Belleville Avenue Substation #680 (one transformer), and River Road Substatin #695 (one transformer). There is a proposed project to add fans to the transformers at River Road and Belleville Avenue. There is a proposed project to upgrade Hathaway Substation #617 to two (2) 5/6.6/8.3 MVA transformers.

Arsene Street Substation #654: For a substation transformer outage, low voltages may be expected on the #220 and #201 circuits when backed up from the Wing Lane #240 line. The installation of additional 1.8 MVAR capacitor banks on the #220 circuit would remedy the low voltage problem. Very high reactive load on the Wing Lane Substation #624 transformer during contingency backup of Arsene Street Substation may require the installation of a 3 MVAR switched capacitor bank at Wing Lane. Very high reactive demand on the Wing Lane #240 line will cause flows 12% over the SCADA LTE rating of the #240 line. This is below actual 28 MVA LTE rating of 795 ACSR conductor, so an adjustment of the SCADA alarm and trip settings is recommended.

Assonet Substation #647: For loss of the #635 34.5kV DSS line between Bell Rock Substation #661 and Assonet Substation #647, or for any reason which requires the #605 circuit to be backed up from the Industrial Park #102 circuit at Summer peak, will overload 1.9 miles of 1/0 ACSR conductor on the #102 circuit, with low voltages to be expected mid-stream on the #102 circuit between two voltage regulators. Upgrade of this 1.9 miles of conductor to 795 kcmil spacer cable is a previously-approved. Approximately 0.5 MVA of non-interruptible load at Assonet load will be at risk at Assonet.

Cross Road Substation #651 (#111 Transformer): A contingency outage of the Cross

Road #109 12/16/20 MVA transformer bank will result in the Cross Road #111 transformer exceeding a 20 MVA limitation caused by a "temporary" interconnection formed by secondary cables running across the ground. For loss of the #109 transformer, the #111 transformer will exceed its 20 MVA rating limitation by 22%. The #111 transformer was formerly the Waltham #110A transformer, installed in a "temporary" configuration to replace a 12/16/20 MVA Cross Road #111 unit, which failed during the Summer of 2002. The temporary configuration involved secondary connections from the transformer 13.2kV bushings to the low voltage bus at Cross Road, which were run in ducts across the ground. Since only one (1) set of secondary connections were run, for a transformer designed for bifurcated secondary connections to an underground cable system, the single set of secondary conductors which were installed are only good for 20 MVA maximum.

There is a proposed project to permanently interconnect the #111 transformer, with a more permanent secondary interconnection fully rated to the size of the transformer.

Also at Cross Road, two (2) DSS lines show thermal violations when backed up from alternative sources: Circuits 531, 533. Contingency backup of the #533 circuit causes the 20 MVA limit posed by the Cross Road #111 transformer to be exceeded, as described above. Contingency backup of the #531 circuit from Fisher Road Substation #657 requires very protracted switching, involving over twenty (20) switching operations, to be able to use a 2nd transformer at that substation. This is discussed further at *Fisher Road Substation*, below.

Crystal Spring Substation #646: For contingency outage of the Crystal Spring transformer, a load transfer to Rochester may result in low primary voltages (0.93 per unit) on Circuit #302.

Also, backup of Crystal Spring circuit #302 from Rochester results in a requirement to remove the 5 MVA Rochester #114 transformer bank from service, and closure of the bus tie to place all load on the Rochester #112 bank, via rather protracted 13.2kV switching. As discussed for *Rochester Substation #745* in the *Plymouth District*, a proposed remedial project is to install a "spare" 10/12 MVA transformer bank, current stored at the Pine Street yard in New Bedford, at Rochester to replace the limiting 5/6 MVA #114 transformer bank.

Fisher Road Substation #657: For loss of the Fisher Road 12/16/20 MVA RTE/ASEA transformer, post-contingency and post-switching, the Cross Road #111 will exceed its 20 MVA LTE limit. The Cross Road #111 transformer was installed in a "temporary" configuration to replace a 12/16/20 MVA unit, which failed during the Summer of 2002. The temporary configuration involved secondary connections from the transformer 13.2kV bushings to the low voltage bus at Fisher Road, which were run in ducts across the ground. Since only one (1) set of secondary connections were run, for a transformer designed for bifurcated secondary connections to an underground cable system, the single set of secondary conductors which were installed are only good for 20 MVA maximum.

There is a proposed project to permanently interconnect the #111 transformer, with a more permanent secondary interconnection fully rated to the size of the transformer.

Contingency backup of the Cross Road #531 circuit requires transfers to the Fisher Road #525 circuit. While the end-state of this transfer is not limiting from a thermal or voltage standpoint, the transfer requires over twenty (20) distribution switching operations to permit the Fisher Road substation to serve the full load of the #531 circuit. Fisher Road Substation has two (2) 115/13.2kV transformers, but only one normally carries load, with the other normally-energized, but with the secondary breaker open. An impedance and rating mismatch between the two transformers prohibits their parallel operation. The installation of a normally-open 13.2kV bus tie breaker at Fisher Road would remedy this situation, and permit both transformers at Fisher Road to carry station load normally. A proposed project has been written to install a 13.2kV bus tie breaker at Fisher Road Substation #657 to permit normal operation of both transformer banks.

Contingency backup of one (1) DSS line (Circuits #524), results in low primary voltages post-contingency. Contingency backup to the Fisher Road #524 circuit is provided by the Cross Road #531 circuit and the Pine Street #70 and #72 circuits. Post-contingency primary voltages are as low as 0.87 per unit, in violation of ANSI minima. The addition of a 1.8 MVAR switched capacitor bank to the #524 circuit would improve voltages post-contingency.

Industrial Park Substation #636: Contingency backup of five (5) 13.2kV DSS lines will result in SCADA alarm limits being exceeded post-contingency.

Contingency outages of either the #101, #103, or #107 13.2kV DSS lines serving the New Bedford Business Park (which back each other up), will cause one or more of the backup circuits to marginally exceed LTE ratings in Summer 2004, by up to 8% beyond 12 MVA cable ratings for 750 kcmil conductor.

There is a proposed project to construct two (2) new 13.2kV DSS lines, the #153 and #154 circuits, to pick up the Western end of the New Bedford Business Park, which would relieve loading on the existing #101, #103, and #107 circuits.

A contingency outage of the #102 circuit, with contingency backup by the #104 and #1-6 circuits, results in a minor post-contingency overload of 1% beyond LTE rating on the #106 circuit.

A contingency outage of the #106 circuit, with backup by the #104 circuit and the Wing Lane #241 line, results in marginal primary voltages of 0.95 per unit at line end.
Also at Acushnet, one (1) 13.2/3.74kV load center unit (LCU) distribution substations has a stepdown transformer exceeding top nameplate ratings, all facilities in, during Summer peak loading conditions. This is: Church Street Substation #684. There is a proposed project to add fans to the transformer at Church Street.

Pine Street Substation #611: LTE rating violations may be seen for up to twelve (12) DSS line contingency outages, these being:

#24 backed up by Acushnet #86, #89S backed up by Acushnet #89N, #70 backed up by #72 via #501/#502, #73 backed up by #55, #72 backed up by #59, #71 backed up by #3, #59 backed up by #72 and #70, #53 backed up by #60, #60 backed up by #2, #2 backed up by #60, #4 backed up by #54, and #7 backed up by #25. The details of the overloads and remedial actions are discussed at *Pine Street Substation #611*.

Also at Pine Street, four (4) 13.2/3.74kV primary network unit (PNU) distribution substations have stepdown transformers exceeding top nameplate ratings, all facilities in, during Summer peak loading conditions. These are: Bolton Substatoin #681, Bonney Substation #682, Grit Street Substation #692, and Durfee Substation #686. There is a proposed project to add fans to all four of these transformers to increase top nameplate ratings.

Wing Lane Substation #624: A contingency backup of the Wing Lane #241 line from the Industrial Park #106 results in the cable getaway at Industrial Park exceeding 9.8 MVA LTE rating. Records show that the cable getaway is mixed 750 kmcil and bifurcated 500 kcmil construction for a short segment, which may be capable of a 12 MVA rating. If the 500 kcmil section is not capable of the higher rating, approximately 239 feet of 500 kcmil cable should be upgraded to 750 kcmil to permit a 12 MVA LTE rating.

Plymouth District

Duxbury Substation #738: Contingency backup of the Duxbury #25 23kV line from the Marshfield #21 line results in loading at 100% of the 21 MVA SCADA LTE rating. Actual conductor rating for 336 ACSR is 28 MVA LTE, the SCADA alarm and trip settings should be updated at Marshfield.

Kingston Substation #735: Contingency backup of the Kingston #15 23kV line by the West Pond #10 line may be problematic due to the fact that the backup is made through the underlying 23kV distribution system (#901 and #930 circuits) by feeding reclosers backwards, defeating the protective function of these devices. Bypass switches should be installed on the reclosers on the #901 and #903 circuits to prevent backfeed during contingency backup of the #15 and #10 lines.

Manomet Substation #721: Due to the addition of three (3) large customer step load increases totaling 6.6 MVA, two (2) Manomet-area contingency outage conditions that were problematic in forecast year 2008 are now problematic by Summer 2005. A contingency outage of the Manomet Substation #721 12/16/20 MVA transformer bank, the West Pond #13 DSS line will exceed its 28 MVA LTE rating by 9%, with 2.6 MVA of load at risk. Further, a contingency outage of either 30/40/50 MVA transformer at West Pond Substation #737 necessitates a load transfer of the #13 DSS line to Manomet Substation #721, resulting in the 29 MVA LTE rating of the Manomet transformer being

exceeded by 6%, with 1.6 MVA of load at risk. The distribution infrastructure in the Manomet power supply area also supplies 4.7 MVA of "backup reserve station service" power to the Entergy Pilgrim Nuclear Power Station, an NRC requirement.

There is a proposed project to upgrade Manomet Substation #721 to a 30/40/50 MVA rated transformer, and to upgrade the #13 DSS line from 336 ACAR to 795 ACSR conductor for 2.9 miles. This package of projects was previously deferrable until 2008, but is now required in 2005 due to the three large customer load additions.

Rochester Substation #745: As described for Crystal Spring Substation #646 (New Bedford District), contingency outage of the Crystal Spring transformer, a load transfer to Rochester may result in low primary voltages (0.93 per unit) on Circuit #302.

Also, backup of Crystal Spring circuit #302 from Rochester results in a requirement to remove the 5 MVA Rochester #114 transformer bank from service, and closure of the bus tie to place all load on the Rochester #112 bank, via rather protracted 13.2kV switching. A proposed remedial project is to install a "spare" 10/12 MVA transformer bank, currently stored at the Pine Street yard in New Bedford, at Rochester to replace the limiting 5/6 MVA #114 transformer bank.

Tremont Substation #713: Contingency backup of the #85 DSS line from the Wareham #84 line will exceed the 21 MVA SCADA alarm limit at Wareham, which appears to be set too low for the line conductor. The line conductor on the Wareham #84 line has recently been upgraded to 795 ACSR conductor with 49 MVA LTE capability. A readjustment of SCADA alarm and trip settings is recommended.

Due to high load growth in the Tremont-Wareham-Valley power supply area due to the A. D. Makepeace development, a small-area supply study has been conducted that recommends that the Tremont #113 12 MVA transformer be upgraded to a 12/16/20 MVA unit (using a unit that will come from Valley Substation #715), by Summer 2008. This is assuming the minimum load growth that could occur over this time frame.

Valley Substation #715: Contingency backup of the #88 DSS line from the #84 line from Wareham will exceed the 21 MVA SCADA alarm limit at Wareham, which appears to be set too low for the line conductor. The line conductor on the Wareham #84 line has recently been upgraded to 795 ACSR conductor with 49 MVA LTE capability. A readjustment of SCADA alarm and trip settings is recommended.

Due to high future load growth projected for the Tremont-Wareham-Valley power supply area due to the A. D. Makepeace development, a small-area supply study has been conducted that recommends that the Valley #113 GE 12/16/20 MVA transformer be upgraded to a 16/21/26 MVA unit (using a unit that will come from Otis Substation #915), by Summer 2005. This is assuming the minimum load growth that could occur over this time frame. A proposed project will be written in support of all projects necessary due to the A. D. Makepeace development.

Also at Valley, one (1) 23/4.16kV distribution substation stepdown transformer is projected to exceed its top nameplate ratings, all facilities in, during Summer peak loading conditions. This is at Buzzards Bay Substation #712. There is a proposed project to add fans to 4kV class distribution substation transformers exceeding top nameplate rating(s) in all three NSTAR/South operating districts.

Wareham Substation #714: Contingency backup of the #84 DSS line from the #88 line from Valley is dependent upon the scheduled completion of the upgrade of 2.6 miles of the #88 line from 336 ACSR to 795 ACSR conductor to increase the LTE rating of the limiting element in this line to 49 MVA. This should be completed prior to Summer 2004, and is an approved project.

Also at Wareham, one (1) 23/4.16kV distribution substation stepdown transformer is projected to exceed its top nameplate ratings, all facilities in, during Summer peak loading conditions. This is at Onset Substation #751. There is a proposed project to add fans to 4kV class distribution substation transformers exceeding top nameplate rating(s) in all three NSTAR/South operating districts.

West Pond Substation #737: SCADA alarm limits and trip settings appear to be set too low at this station. Post-contingency behavior of three (3) DSS lines (10, 12, and 14), demonstrate problems will SCADA alarm and trip settings being set much lower than the rating of the 795 ACSR conductor on the #12 and #14 lines. A readjustment of SCADA alarm and trip settings from 21 MVA to 49 MVA LTE is recommended.

As described at Manomet Substation #721, for a contingency outage of the Manomet Substation #721 12/16/20 MVA transformer bank, the West Pond #13 DSS line will exceed its 28 MVA LTE rating by 9%, with 2.6 MVA of load at risk at Summer 2005 forecasted load levels.

There is a proposed project to upgrade the #13 DSS line from 336 ACAR to 795 ACSR conductor for 2.9 miles. This is part of a package of projects was previously deferrable until 2008, but is now required in 2005 due to the three large customer load additions in the South Plymouth area.

Cape & Vineyard District

Falmouth Substation #933: At Summer forecasted load levels, for a contingency outage of one of the Falmouth transformer banks, a 1200 Ampere (49 MVA LTE) limitation posed by the 23kV bus tie breakers (such as T1-2) is exceeded by the flow through the bus during the tied condition. There is an already-identified need to upgrade the bus tie breakers for OSHA safety compliance, and there is a proposed project to upgrade these 23kV tie breakers to 2000 Amperes (80 MVA) as part of this OSHA upgrade, by Summer 2005

By Summer 2007, for a contingency outage of the #115W FPE transformer bank, the #107E GE transformer bank will exceed its 61 MVA LTE limit, even after all 23kV

distribution switching and full dispatch of Martha's Vineyard diesel generation is accomplished.

By December, 2008, the contract with Mirant for the output of the Oak Bluffs and W. Tisbury diesel generation expires, further exacerbating the firm supply deficiency at Falmouth Substation #933

Also at Falmouth #933, the 23/4.8kV (delta) Falmouth local distribution substation stepdown transformer exceeds top nameplate ratings, all facilities in, during Summer peak loading conditions. There is a proposed project to add fans to 4kV class distribution substation transformers exceeding top nameplate rating(s) in all three NSTAR/South operating districts.

A small area supply study will be conducted to ascertain the most cost effective firm supply improvements for the Falmouth Substation #933 and Martha's Vineyard power supply areas.

Harwich Substation #968: Contingency outages of the Harwich #95 and #92 23kV DSS lines and subsequent backup by each other results in SCADA alarm and trip settings being exceeded. A readjustment of the 34 MVA SCADA alarm settings to match the 49 MVA LTE rating for the 795 ACSR conductor is recommended.

Also at Harwich, two (2) 23/4.16kV distribution substation stepdown transformers exceed top nameplate ratings, all facilities in, during Summer peak loading conditions. These are at Harwich Distribution Substation #973 and W. Harwich Distribution Substation #974. There is a proposed project to add fans to 4kV class distribution substation transformers exceeding top nameplate rating(s) in all three NSTAR/South operating districts.

Hatchville Substation #936: Contingency backup of the Hatchville #78 23kV DSS line from the Otis #86 DSS line requires the installation of bypass switches around reclosers on the #406/#409 cirdcuits in the Clay Pond Road area.

A contingency outage of the Hatchville 30/40/50 MVA transformer bank, at forecasted Summer 2005 load levels, will result in the Otis Substation #915 16/21/26 MVA transformer exceeding 33 MVA LTE rating. There is a proposed project to upgrade the Otis Substation to a 30/40/50 MVA transformer in 2005, and subsequently move the 16/21/26 MVA transformer to the Valley #715 substation in the Plymouth District.

Hyannis Junction Substation #961: Contingency backup of two (2) 23kV DSS feeders (#92, and #93), result in minor SCADA alarm limit violations on the Hyannis #92 and Harwich #92 DSS lines, which should be investigated. Existing 34/36 MVA SCADA alarm limits too low for existing 795 ACSR conductor on these DSS lines, capable of 49 MVA LTE rating.

A contingency backup of the Hyannis #82 DSS line by the Oak Street #920 #82 DSS line exceeds 36 MVA rating for 477 ACSR conductor. A proposed project has been written to upgrade 1.9 miles of the Oak Street #82 line to 795 ACSR conductor.

Mashpee Substation #946: A contingency backup of the Mashpee #88 DSS line by the Oak Street #920 #82 DSS line exceeds 36 MVA rating for 477 ACSR conductor. A proposed project has been written to upgrade 1.9 miles of the Oak Street #82 line to 795 ACSR conductor.

Oak Street Substation #920: A contingency backup of the Mashpee #88 or Hyannis #82 DSS lines by the Oak Street #920 #82 DSS line exceeds 36 MVA rating for 477 ACSR conductor. A proposed project has been written to upgrade 1.9 miles of the Oak Street #82 line to 795 ACSR conductor. This was a portion of the original Oak Street Substation authorization that was deferred.

Also at Oak Street, one (1) 23/4.16kV distribution substation stepdown transformer exceeds top nameplate ratings, all facilities in, during Summer peak loading conditions. This is at Osterville Distribution Substation #913. Due to age-of-equipment issues this station, as well as known OSHA code violations, there is a proposed project to completely replace this station with a new, double-ended 23/4.16kV stepdown station with two (2) 7.5 MVA transformers.

Orleans Substation #975: Contingency backup of the Orleans #95 DSS line by the Harwich #95 DSS line results in minor SCADA alarm limit violations, which should be investigated. Existing 34 MVA SCADA alarm limits too low for existing 795 ACSR conductor on these DSS line, capable of 49 MVA LTE rating.

Also at Orleans, two (2) 23/4.8kV (delta) and one (1) 23/4.16kV (wye) distribution substation stepdown transformesr exceed top nameplate ratings, all facilities in, during Summer peak loading conditions. These are at Orleans local Distribution Substation #975, Chatham Distribution Substation #914, and Brewster Distribution Substation #951. There is a proposed project to add fans to 4kV class distribution substation transformers exceeding top nameplate rating(s) in all three NSTAR/South operating districts.

Otis Substation #915: Contingency backup of the Otis #86 line by tying to the Hatchville #78 line will require the installation of bypass switches around reclosers on the #406/#409 distribution circuits. Further, readjust SCADA Alarm and trip settings on Hatchville #78 line to match 49 MVA LTE rating of 795 ACSR conductor

Starting at the Summer 2005 load forecast year, a contingency outage of the Hatchville #936 30/40/50 MVA transformer bank will overload the Otis Substation #915 16/21/26 MVA transformer bank beyond its 33 MVA LTE rating. An upgrade of the Otis Substation transformer to a new 30/40/50 MVA unit is proposed. There is a proposed project to upgrade the Otis Substation to a 30/40/50 MVA transformer in 2005, and

subsequently move the 16/21/26 MVA transformer to the Valley #715 substation in the Plymouth District.

Martha's Vineyard 23kV Submarine Cables: Contingency outages of the three (3) load-carrying 23kV submarine cables that serve Martha's Vineyard from the Falmouth Substation were analyzed. The contingencies were simulated at the "forecasted" 46 MW load level for Summer 2004. At the 46 MW load level, single-contingency outages of either the #91, #97, or #99 cables not problematic so long as 10.0 MW of firm generation available at Mirant Oak Bluffs and W. Tisbury generating plants.

In the special case of a single-contingency loss of the #97 overhead 23kV DSS line between the Falmouth Substation and the Elm Road switching station, an outage of both the #91 and #97 cables results. In this scenario, the full 13.5 MW of Mirant generation at both Oak Bluffs and W. Tisbury must operate to minimize flow on the remaining #99 cable. Load-shedding must be implemented so that total Island load does not exceed firm capability of 38.7 MVA. At 46 MW load level, 7.3 MW of Vineyard load will be at risk.

345kV / 115kV Bulk Transmission System

L/O #109 115kV Line (High Hill – Cross Road – Fisher Road): A contingency outage of the #109 High Hill–Cross Road-Fisher Road 115kV transmission line in the Western area of the New Bedford District causes a forced outage of three (3) substation transformer banks (two at Fisher Road Substation #657, one at Cross Road Substation #651), and would require load shedding at both Summer and Winter peak and shoulder-peak conditions. The installation of two (2) 115kV SCADA-controlled, motor-operated switches on the #109 and #111 115kV lines entering Cross Road would permit the affected Cross Road bank to be switched over to the remaining in-service line. These switches have been purchased, but remain to be installed. It is recommended that these two 115kV switches be installed as planned. The installation of the switches avoids forced outages of transformer banks at Cross Road for loss of either 115kV transmission line.

L/O #107 115kV Line (Bourne-Otis section): A contingency outage of the #107 Bourne-Otis 115kV transmission line in the Upper Cape area will result in transmission system voltages being below 0.95 per unit in the vicinity of Falmouth and Otis Substations, with voltages at 1.0 per unit at the Otis Substation 23kV bus. Load transfers from Otis to Sandwich and Hatchville may be required. Load transfers from Otis to Hatchville are subject to caveats discussed at *Hatchville Substation #936,* due to limitations identified with feeding reclosers backwards to effect this load transfer. The low voltage condition may be avoided by the proposed installation of 30 MVA of additional reactive support at Barnstable S/S #958.

L/O #116 115kV Line (Carver – Brook Street S/S): A contingency outage of the #116 Carver-Brook Street 115kV line in the Northern area of the Plymouth District places all of the Northern portion of the District on the #191 Auburn Street-Kingston 115kV line. This line has a 142 MVA LTE rating due to 477 ACSR conductor. Post-contingency, the

line will be loaded to 4% beyond 142 MVA LTE rating will low voltages on the 115kV system serving the West Pond, Kingston, Duxbury, and Marshfield Substations. The minor overload can be mitigated by transferring 23kV load from West Pond Substation #737 to Tremont Substation #713 and Manomet Substation #721. Load transfers from West Pond to Manomet are subject to various caveats discussed at West Pond Substation #737 and Manomet Substation #721, insofar as system upgrades required to further permit these load transfers after the addition of 6.6 MVA of new customer load in the S. Plymouth area. Assuming the identified substation and distribution supply system upgrades are approved and completed, upgrade of the #191 line to 795 ACSR conductor can be deferred to Summer 2006.

Overload of #117 Line Due to Holbrook #102 345kV Stuck Breaker: While not caused by a contingency condition within the NSTAR/South system, a stuck 345kV breaker #102 at Holbrook S/S #478 results in the forced outage of a 345kV line and two (2) 345/115kV autotransformers (one at Holbrook, one at Auburn Street). This results in a shift of power flow from the NSTAR/South system such that the 115kV system in the Plymouth District picks up National Grid (Mass. Electric Co.) load through the #117 Brook Street-Kingston 115kV line, exceeding 142 MVA for 336 ACSR conductor. This situation was aggravated by the installation of a 115kV circuit breaker on the "low side" of the Auburn Street 345/115kV autotransformer by National Grid, USA, which changes the post-contingency topology of the 115kV system at Auburn Street S/S for loss of the Auburn Street autotransformer. The change in topology causes more flow from the #191 line post contingency, increasing load through NSTAR's 115kV system in the Plymouth District, and increasing flow on the #117 line such that the 142 MVA LTE rating is exceeded.

Upgrade of the #117 line to 795 ACSR conductor can be deferred to Summer 2006, and is being studied in comparison to other upgrades, such as doubling-up the Holbrook 345kV breaker that is the causative event, or by the installation of a 345kV breaker at Auburn Street, such that a forced outage of the #335 line and the Auburn auto for a Holbrook #102 stuck breaker is avoided.

Loss of #125 115kV Line (Orleans-Wellfleet): A contingency outage of the #125 115kV line to Wellfleet Substation #976 on the Lower Cape requires protracted 23kV load transfers to Orleans Substation #975. At Summer 2004 load levels, approximately 6 MVA of load is at risk for 174 hours. The installation of a SCADA-controlled 115kV switch at the end of the #125 line at Wellfleet will improve switching during load transfers. Due to the low amount of load at risk for a short period of time, system upgrades to improve firm supply to Wellfleet Substation #976 are currently under review, but deferrable.

Assonet Substation Under Construction: December, 2003

New Bedford District

Bulk Substation Transformer Outages
Distribution Supply Line Outages
Thermal Results and Remedial Switching Actions

2004 T&D OPERATING STUDY
New Bedford District

ACUSHNET SUBSTATION #612

Acushnet Substation #612 serves a power supply area consisting of the City of New Bedford and portions of the Towns of Acushnet and Fairhaven. During the summer of 2003, peak station load coincident with New Bedford District on 8/22/03 13:00 hours was 31.5 MW.

Acushnet Substation #612 consists of two 115/13.2 kV transformers:

#112: Magnetek 37.5/50/62.5 [70] MVA 115/13.2 kV
#114: ABB 37.5/50/62.5 [70] MVA 115/13.2 kV

Overload Ratings:

Transformer	Nameplate	Summer Normal Rating No Loss of Life	Summer 12 Hour LTE Rating 1% Loss of Life
#112	37.5/50/62.5 [70] MVA	84 MVA	91 MVA
#114	37.5/50/62.5 [70] MVA	80 MVA	87 MVA

Station Capabilities:

Total Station Capacity (N-0) Normal Ratings	Station Firm Capacity (N-1) LTE Ratings	Load Transfers (MVA)	Total LCC (LTE + Transfers)
164 MVA	87 MVA	31 MVA	118 MVA

Station Load Forecast:

2004	2005	2006	2007	2008
44.1 MW	44.8 MW	45.2 MW	45.7 MW	46.3 MW

Switching Actions:

Loss of #112 Transformer

Open: Circuit Switcher 11227
Main Circuit Breaker 112N21
Close: Tie Circuit Breaker 114N21

Loss of #114 Transformer

Open: Circuit Switcher 11427
Main Circuit Breaker 114S21
Close: Tie Circuit Breaker 112S21

Distribution Feeder Switching:

For either transformer outage, remaining transformer carries full station load of 45.4 MVA.

While not required for loss of either transformer, transfer of the station's 13.2kV distribution supply lines via manual and radio-controlled switches may be conducted for additional load reduction. The transfers and switching operations required are shown on the attached table.

Total Transfer: 31 MVA

Summary of Concerns: Acushnet Substation #612

Station:

Based on load projections, Acushnet Substation #612 has adequate firm capability through load forecast year 2013 for a contingency outage of either transformer bank. Please reference power flow diagrams NB-1 and NB-2.

Transmission:

From a station capacity perspective, contingency outages of either the #112 or #114 115kV lines is not problematic at Acushnet Substation #612. Post contingency, 115kV circuit breaker #EW22 may be closed for loss of either transmission line.

DSS/Distribution:

1. Pine Street Circuit #24 may exceed 8.8 MVA LTE rating by 7% for contingency backup of Acushnet #86 Circuit. A swap of Highland Substation to either the lightly-loaded #80 or #83 circuits is a remedial action that is under study.

2. Pine Street Circuit #89S may exceed 8.8 MVA LTE rating by 26% for contingency backup of Acushnet #89N circuit. Additional load transfers of distribution circuit #404 to the Industrial Park #104 DSS line is a remedial action that is under study.

3. Pine Street Circuit #66 may approach 95% of 8.8 MVA LTE rating for contingency backup of Acushnet #81 circuit.

13.2 kV Feeder	Backup Circuit	Summer LTE Rating in MVA	Projected % of LTE 2004	Projected % of LTE 2008
Acushnet #86	Pine Street #24	8.8	107%	107%
Acushnet #89S	Pine Street #89S	8.8	127%	126%
Acushnet #81	Pine Street #66	8.8	95%	100%

4kV Substation and Distribution:

Acushnet Substation #612 feeds three (3) 3.74 kV primary network substations: Belleville Avenue, Hathaway North and South, and River Road.

All four (4) of the 13.2/3.74kV transformers at these three (3) primary network distribution stations either have or are projected to exceed top nameplate ratings during Summer peak conditions, all-facilities-in. The table below summarizes the capacity of these 13.2/3.74 kV stations.

3.74 kV Transformer	Normal Rating	2004 Projection	2008 Projection
Belleville Avenue	3.75 MVA	4.41 MVA	4.58 MVA
Hathaway North	3.00 MVA	4.23 MVA	4.40 MVA
Hathaway South	3.00 MVA	3.25 MVA	3.39 MVA
River Road	3.75 MVA	3.88 MVA	4.04 MVA

Proposed Integrated Plan:

The suggested actions table listed below will address all of the capacity concerns in the Acushnet Substation #612 power supply area.

The four (4) transformers at the Hathaway, Belleville Avenue, and River Road 3.74kV substations serve an integrated 4kV primary network system. The proposed upgrade at Hathaway Substation to replace two (2) 3 MVA transformers with higher-rated 5/6.6/8.3 MVA units will address capacity, maintenance, and age-of-equipment issues at that station. The proposed upgrades at the Belleville Avenue and River Road Substations involves the addition of thermostatically-controlled fans to increase the top nameplate ratings of those transformers by about 33%.

Two (2) minor 13.2kV DSS line overloads that occur during load transfers to Pine Street are currently under review. The transfer of the Acushnet #86 circuit to the Pine Street #24 circuit results in 7% overload beyond the 8.8 MVA rating for 500 kcmil conductor. To remedy the situation, the Highland Avenue 13.2/3.74kV station can be swapped from the #86/24 circuits to the more-lightly-loaded #80/83 circuits. The transfer of the Acushnet #89N circuit to the Pine Street #89S circuit will require additional load transfers from the #404 distribution circuit, which the #89 DSS line feed, to the Industrial Park #104 circuit in the North end of New Bedford.

Recommended course of action for Acushnet Substation #612

Action	Year needed	Estimated Cost
⇒ Replace two 3 MVA 13.2kV/3.74kV transformers at Hathaway with 5 MVA units	2004	$903K
⇒ Install fans on one 3 MVA 13.2kV/3.74kV transformer at Belleville Avenue	2004	$12K
⇒ Install fans on one 3 MVA 13/2kV/3.74kV transformer at River Road	2004	$12K
⇒ Swap Highland Avenue 3.74kV Sub to either circuits #80 or #83	2004	TBD

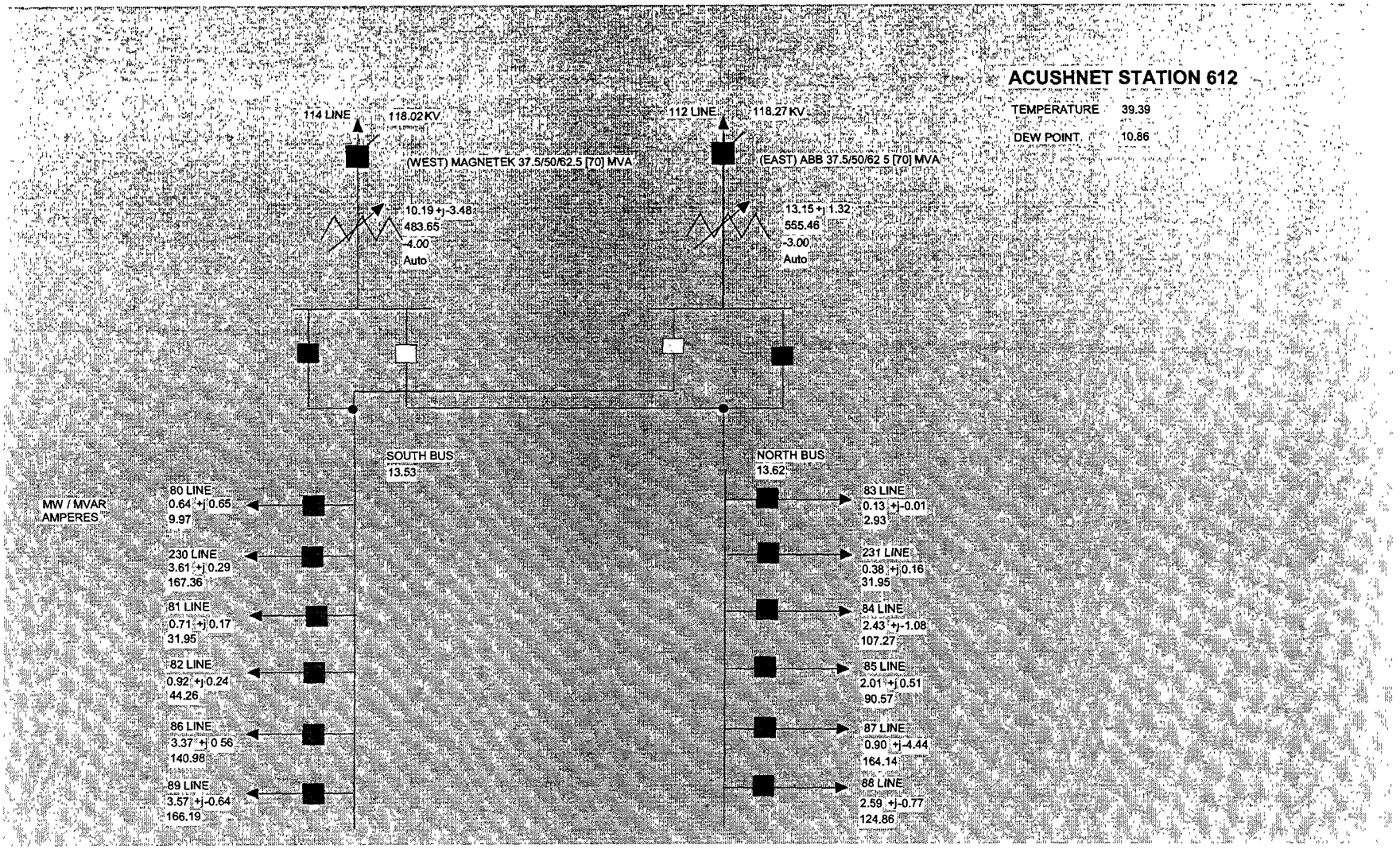
ACUSHNET STATION 612
TEMPERATURE 39.39
DEW POINT 10.86
114 LINE
118.02 KV
112 LINE
118.27 KV
(WEST) MAGNETEK 37.5/50/62.5 [70] MVA
(EAST) ABB 37.5/50/62 5 [70] MVA
10.19 +j-3.48
483.65
-4.00
Auto
13.15 +j 1.32
555.46
-3.00
Auto
SOUTH BUS
13.53
NORTH BUS
13.62
MW / MVAR
AMPERES
80 LINE
0.64 +j 0.65
9.97
230 LINE
3.61 +j 0.29
167.36
81 LINE
0.71 +j 0.17
31.95
82 LINE
0.92 +j 0.24
44.26
86 LINE
3.37 +j 0 56
140.98
89 LINE
3.57 +j-0.64
166.19
83 LINE
0.13 +j-0.01
2.93
231 LINE
0.38 +j 0.16
31.95
84 LINE
2.43 +j-1.08
107.27
85 LINE
2.01 +j 0.51
90.57
87 LINE
0.90 +j-4.44
164.14
88 LINE
2.59 +j-0.77
124.86

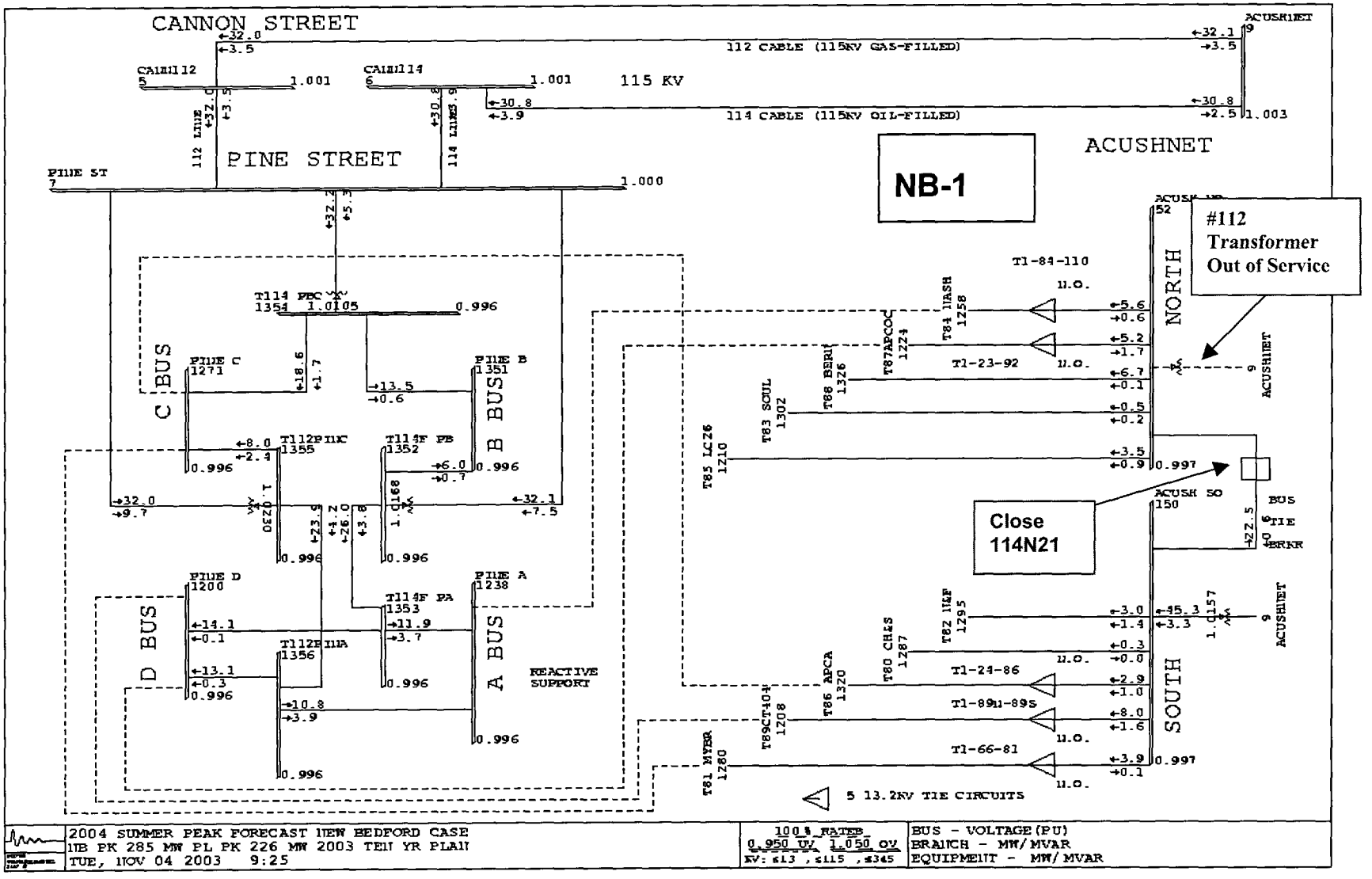
CANNON STREET
112 CABLE (115KV GAS-FILLED)
114 CABLE (115KV OIL-FILLED)
115 KV
PINE STREET
ACUSHNET
NB-1
#112 Transformer Out of Service
Close 114N21
NORTH
SOUTH
C BUS
B BUS
D BUS
A BUS
REACTIVE SUPPORT
5 13.2KV TIE CIRCUITS
2004 SUMMER PEAK FORECAST NEW BEDFORD CASE
NB PK 285 MW PL PK 226 MW 2003 TEN YR PLAN
TUE, NOV 04 2003 9:25
100% RATED
0.950 UV 1.050 OV
BUS - VOLTAGE (PU)
BRANCH - MW/MVAR
EQUIPMENT - MW/MVAR

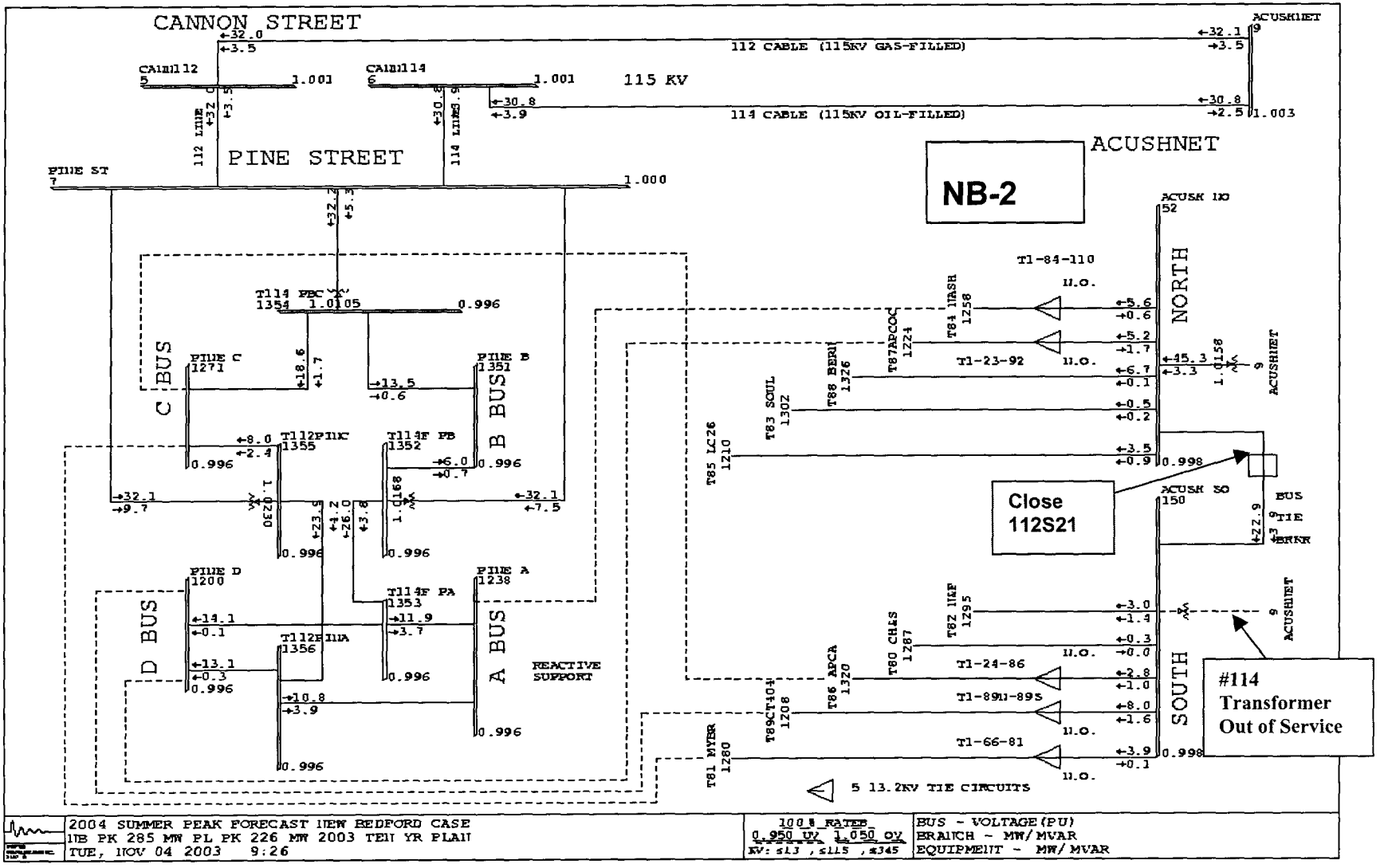
CANNON STREET
112 CABLE (115KV GAS-FILLED)
114 CABLE (115KV OIL-FILLED)
115 KV
PINE STREET
ACUSHNET
NB-2
NORTH
SOUTH
C BUS
B BUS
D BUS
A BUS
REACTIVE SUPPORT
5 13.2KV TIE CIRCUITS
Close 112S21
#114 Transformer Out of Service
2004 SUMMER PEAK FORECAST NEW BEDFORD CASE
NB PK 285 MW PL PK 226 MW 2003 TEN YR PLAN
TUE, NOV 04 2003 9:26
BUS - VOLTAGE (PU)
BRANCH - MW/MVAR
EQUIPMENT - MW/MVAR

2003 5/10 Year Plan - Year 2004 DSS Line Load Transfers - New Bedford District

BULK SUBSTATION DSS LINE SINGLE-CONTINGENCY ANALYSIS

* Coincident Feeder peaks at Forecasted Summer 2004 District Peaks
* Switching Sequences and Effects of Load Transfer Under Coincident Peak Conditions

CIRCUIT NUMBER	COINCIDENT PEAK LOAD (MW)	(MX)	(MVA)	NUMBER CUSTOMERS	BACKUP CIRCUIT	BACKUP STATION	SWITCHING ACTIONS	BACKUP CIRCUIT LOAD (BEFORE TRANSFER) (MW)	(MX)	(MVA)	BACKUP CIRCUIT LOAD (AFTER TRANSFER) (MW)	(MX)	(MVA)	BACKUP CIRCUIT SCADA LIMITS NORMAL (MVA)	LTE (MVA)	STE (MVA)	TRIP (MVA)	
Acushnet #112 North Bus																		
231	0.9	0.4	1.0		241		CLOSE T1-231-241 OPEN 23121	7.9	2.2	8.2	8.9	2.6	9.3	14.0	15.0	16.0	16.4	
84	5.6	0.6	5.6		110		CLOSE T1-84-110 OPEN 8421	2.7	1.1	2.9	8.4	0.8	8.4	8.0	8.8	9.2	13.7	
87	5.2	1.7	5.5		23		CLOSE T1-23-92 OPEN 8721	1.4	0.7	1.6	6.6	0.8	6.6	8.0	8.8	9.2	13.7	
88	6.7	0.4	6.7		231		CLOSE T1-88-231 OPEN 8821	0.9	0.4	1.0	7.7	0.4	7.7	8.0	9.2	9.7	16.0	
83	0.5	0.2	0.5		80		CLOSE 8027 OPEN 8321 OPEN 8327	0.3	0.1	0.3	0.8	0.2	0.8	8.0	8.8	9.3	16.0	
85	3.5	0.9	3.6		82		CLOSE T1-82-85 OPEN 8521	2.9	1.4	3.2	6.5	2.5	7.0	8.0	8.8	9.3	16.0	
Acushnet #114 South Bus																		
230	4.9	0.2	4.9		240		CLOSE T1-230-240 OPEN 23021	9.3	2.3	9.6	14.2	2.6	14.4	17.0	18.5	19.0	22.0	
82	2.9	1.4	3.2		85		CLOSE T1-82-85 OPEN 8221	3.5	0.9	3.6	6.6	2.5	7.1	8.0	8.8	9.3	16.0	
80	0.3	0.1	0.3		83		CLOSE 8027 OPEN 8021	0.5	0.2	0.5	0.8	0.2	0.8	8.0	8.8	9.3	16.0	
86	2.8	0.9	2.9		24		CLOSE T1-24-86 OPEN 8621	5.9	1.5	6.1	8.9	2.8	9.3	8.0	8.8	9.3	13.7	Ckt 24 flow 7% > 8.8 MVA LTE Rating for 11,778 feet 500 kcmil cable *Note: Pre-Highland Swap to 80/83*
89N	8.0	1.6	8.2		89S		CLOSE T1-89N-89S OPEN 8921 OPEN 8957 CLOSE 8657	2.6	1.0	2.8	10.7	3.0	11.1	8.0	8.8	9.2	13.7	Ckt 89-S flow 27% > 8.8 MVA LTE Rating for 4536 feet 500 kcmil cable and 1540 feet 300 kcmil 2% > 6.8 MVA LTE Rtg (Transfer Building 19 to #86 Circuit)
81	3.9	0.1	3.9		66		CLOSE T1-66-81 OPEN 8121	4.0	2.4	4.7	8.0	2.4	8.4	8.0	8.8	9.3	16.0	Ckt 66 at 95% of 8.8 MVA SCADA Alarm Limit

2004 T&D OPERATING STUDY
New Bedford District

ARSENE STREET SUBSTATION #654

Arsene Street Substation #654 serves a power supply area consisting of portions of the Town of Fairhaven. During the summer of 2003, peak station load coincident with New Bedford District on 8/22/03 13:00 hours was 13.1 MVA.

Arsene Street Substation #654 consists of one 115/13.2 kV transformer:

#112: McGraw-Edison 21/28/35 [39] MVA 115/13.2 kV

Overload Ratings:

Transformer	Nameplate	Summer Normal Rating No Loss of Life	Summer 12 Hour LTE Rating 1% Loss of Life
#112	21/28/35 [39] MVA	38 MVA	41 MVA

Station Capabilities:

Total Station Capacity (N-0) Normal Ratings	Station Firm Capacity (N-1) LTE Ratings	Load Transfers (MVA)	Total LCC (LTE + Transfers)
38 MVA	0 MVA	16.3 MVA	16.3 MVA

Station Load Forecast:

2004	2005	2006	2007	2008
16.1 MW	16.3 MW	16.4 MW	16.5 MW	16.7 MW

Switching Actions:

Loss of McGraw/Edison Transformer

Open: Circuit Switcher 11242
Main Circuit Breaker 112B42
Circuit Breaker #22042 at Arsene Street

Close: Tie Switch T1-221-301 on R.O.W.
Tie Switch T1-220-240 on Alden Rd. North of Bridge St.

Distribution Feeder Switching:

For a contingency outage of the Arsene Street transformer, transformers at adjacent substations at Wing Lane #624 and Crystal Spring #646 carry the full station load of 16.1 MW. Please reference power flow diagrams NB-3 through NB-5.

Persistent low-voltage conditions on the Arsene Street #220 circuit during contingency backup from the Wing Lane #240 line (0.92 to 0.94 per unit) may require the addition of a 1.8 MVAr capacitor bank on the #220 circuit. Additionally, high reactive load on the Wing Lane Substation transformer during contingency backup of Arsene Street (up to 15 MVArs) may require the addition of a 3 MVAR SCADA-controlled switched capacitor at Wing Lane Substation #624.

Transfer of the station's 13.2kV distribution supply lines via manual switches may be conducted for additional load reduction. The transfers and switching operations required are shown on the attached table.

Total Transfer: 13.5 MVA

Summary of Concerns: Arsene Street Substation #654

Station:

Based on load projections, Arsene Street Substation #654 has adequate firm capability via 13.2kV load transfers to other stations through load forecast year 2013 for a contingency outage of single-ended transformer bank.

Transmission:

From a station capacity perspective, contingency outages of either #112 115kV line (Wing Lane to Arsene Street lateral) is not problematic at Arsene Substation #654. Post contingency, outage of the line has identical performance to loss of the transformer.

DSS/Distribution:

1. The Wing Lane #240 13.2kV DSS Line may reach 20.8 MVA during the contingency backup of the Arsene Street #220 line, which is 12% beyond the SCADA LTE rating of the line, and 94% of 22 MVA SCADA trip setting. Additionally, low voltages occur on the "lower ends" of the #220 line, including the #221 circuit laterals in the downtown Fairhaven area. Additional reactive support, such as a 1.8 MVAr capacitor bank on the #220 line, and a 3 MVAR capacitor bank at Wing Lane Substation, should address the identified low voltage problems and reduce circuit reactive demand at Wing Lane. The 18.5 MVA SCADA LTE rating for the #240 line is below the 28 MVA LTE rating for 795 ACSR conductor; a readjustment of SCADA alarm and trip settings to respect the actual 28 MVA limit for the conductor is recommended.

13.2 kV Feeder	Backup Circuit	Summer LTE Rating in MVA	Projected % of LTE 2004	Projected % of LTE 2008
Arsene St. #220	Wing Lane #240	18.5 (SCADA) 28 (795 conductor)	112% 74%	112% 74%

4kV Substation and Distribution:

There are no 4kV substations or circuits served by Arsene Street Substation #654.

Proposed Integrated Plan:

The suggested actions table listed below will address all of the capacity concerns in the Arsene Street Substation #654 power supply area.

Install additional reactive support to correct load voltage conditions in the Fairhaven area that may occur during contingency backup of the Arsene Street #220 line from the Wing Lane #2140 line, and the high reactive loading on the Wing Lane #240 line and the Wing Lane transformer during contingency backup of the Arsene Street Substation transformer.

Recommended course of action for Arsene Street Substation #654

Action	Year needed	Estimated Cost
⇒ Install 1.8 MVAR switched capacitor bank on Arsene Street #220 line	2005	$TDB
⇒ Install 3 MVAR SCADA-controlled capacitor at Wing Lane Substation #624	2005	$TBD

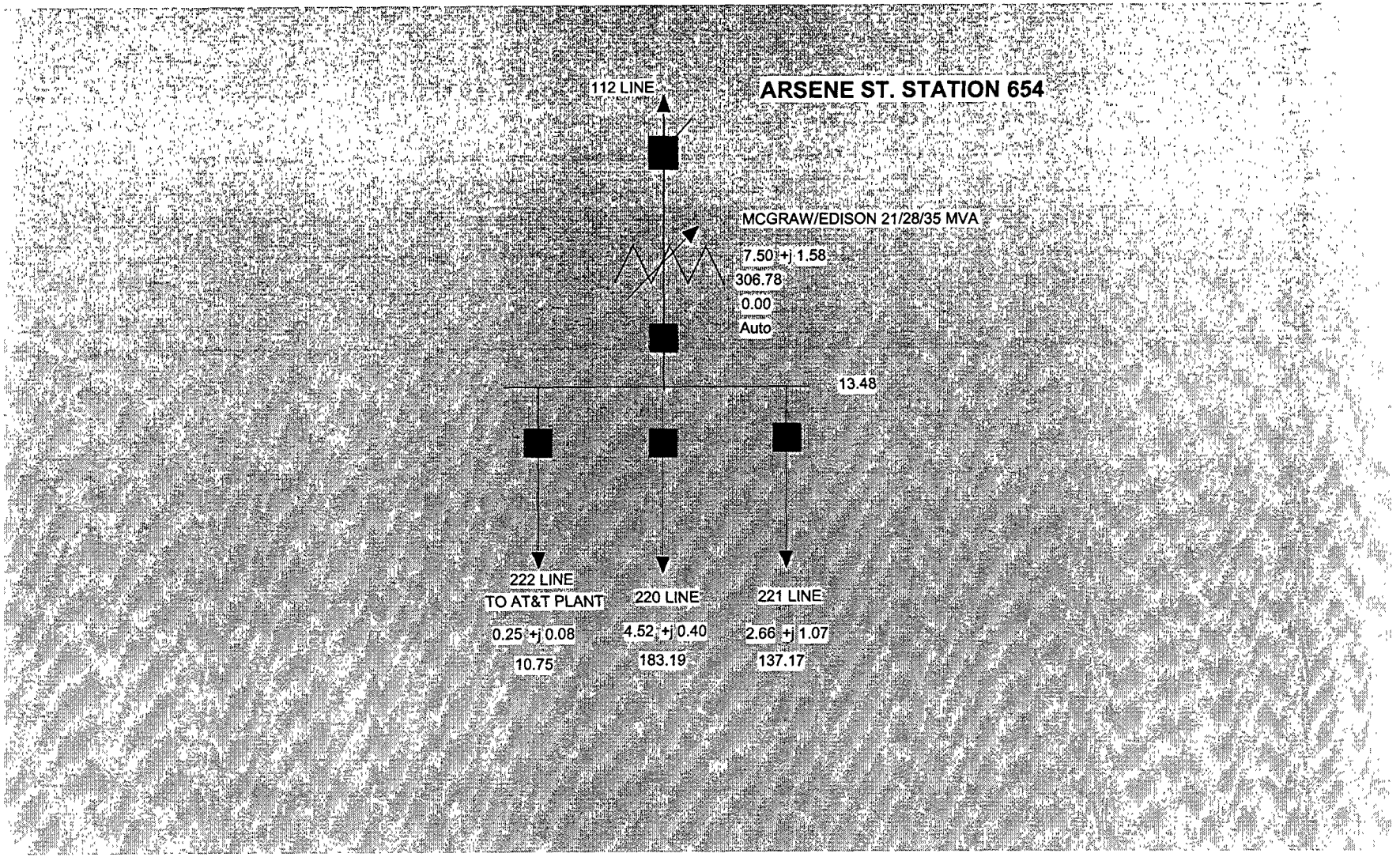
ARSENE ST. STATION 654
112 LINE
MCGRAW/EDISON 21/28/35 MVA
7.50 +j 1.58
306.78
0.00
Auto
13.48
222 LINE
TO AT&T PLANT
0.25 +j 0.08
10.75
220 LINE
4.52 +j 0.40
183.19
221 LINE
2.66 +j 1.07
137.17

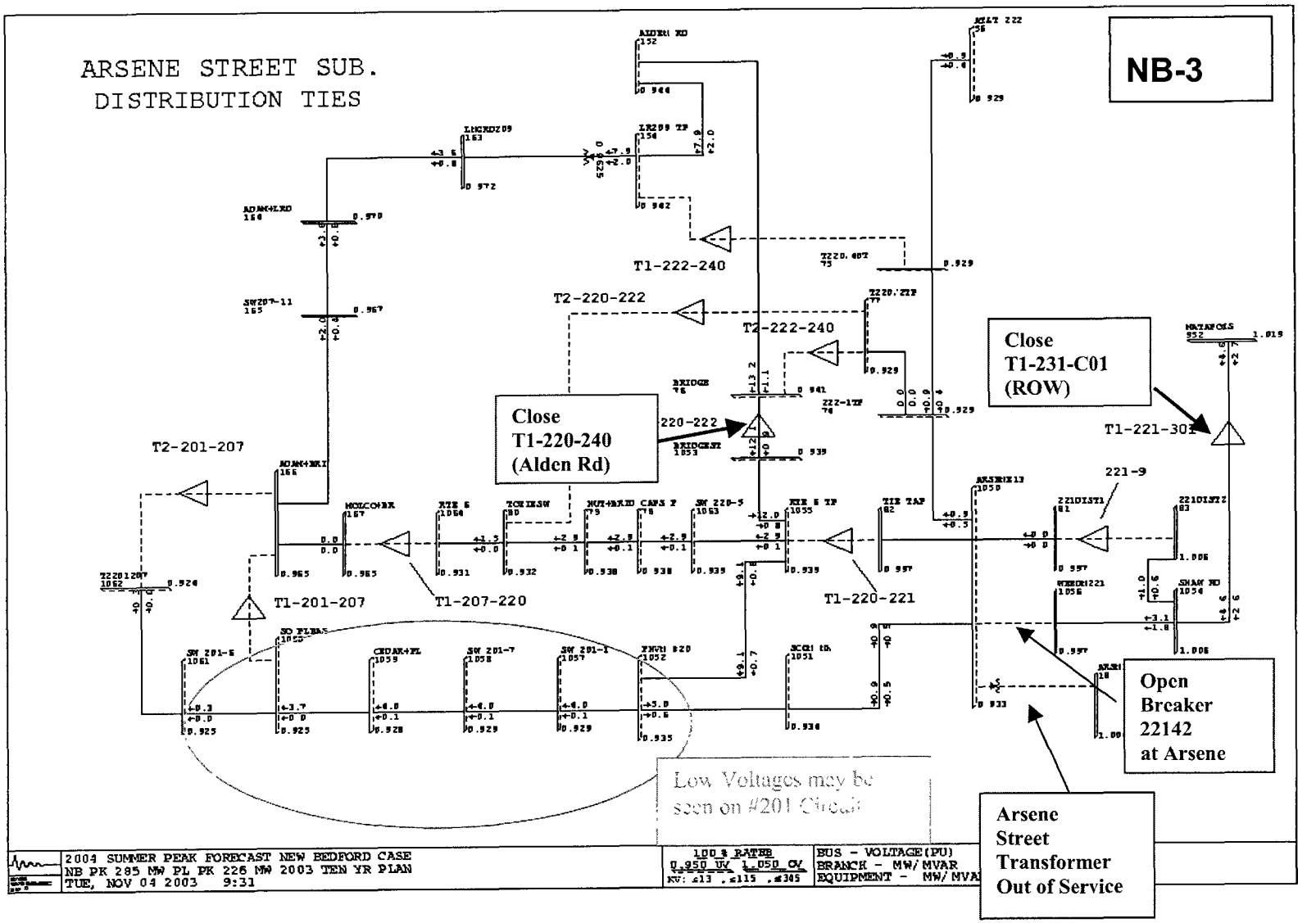
ARSENE STREET SUB.
DISTRIBUTION TIES
NB-3
T1-222-240
T2-220-222
T2-222-240
Close
T1-231-C01
(ROW)
Close
T1-220-240
(Alden Rd)
T2-201-207
T1-201-207
T1-207-220
T1-220-221
221-9
Open
Breaker
22142
at Arsene
Low Voltages may be
seen on #201 Circuit
Arsene
Street
Transformer
Out of Service
2004 SUMMER PEAK FORECAST NEW BEDFORD CASE
NB PK 285 MW PL PK 226 MW 2003 TEN YR PLAN
TUE, NOV 04 2003 9:31
100 % RATES
0.950 UV 1.050 OV
KV: ≤13 , ≤115 , ≥345
BUS - VOLTAGE(PU)
BRANCH - MW/MVAR
EQUIPMENT - MW/MVA

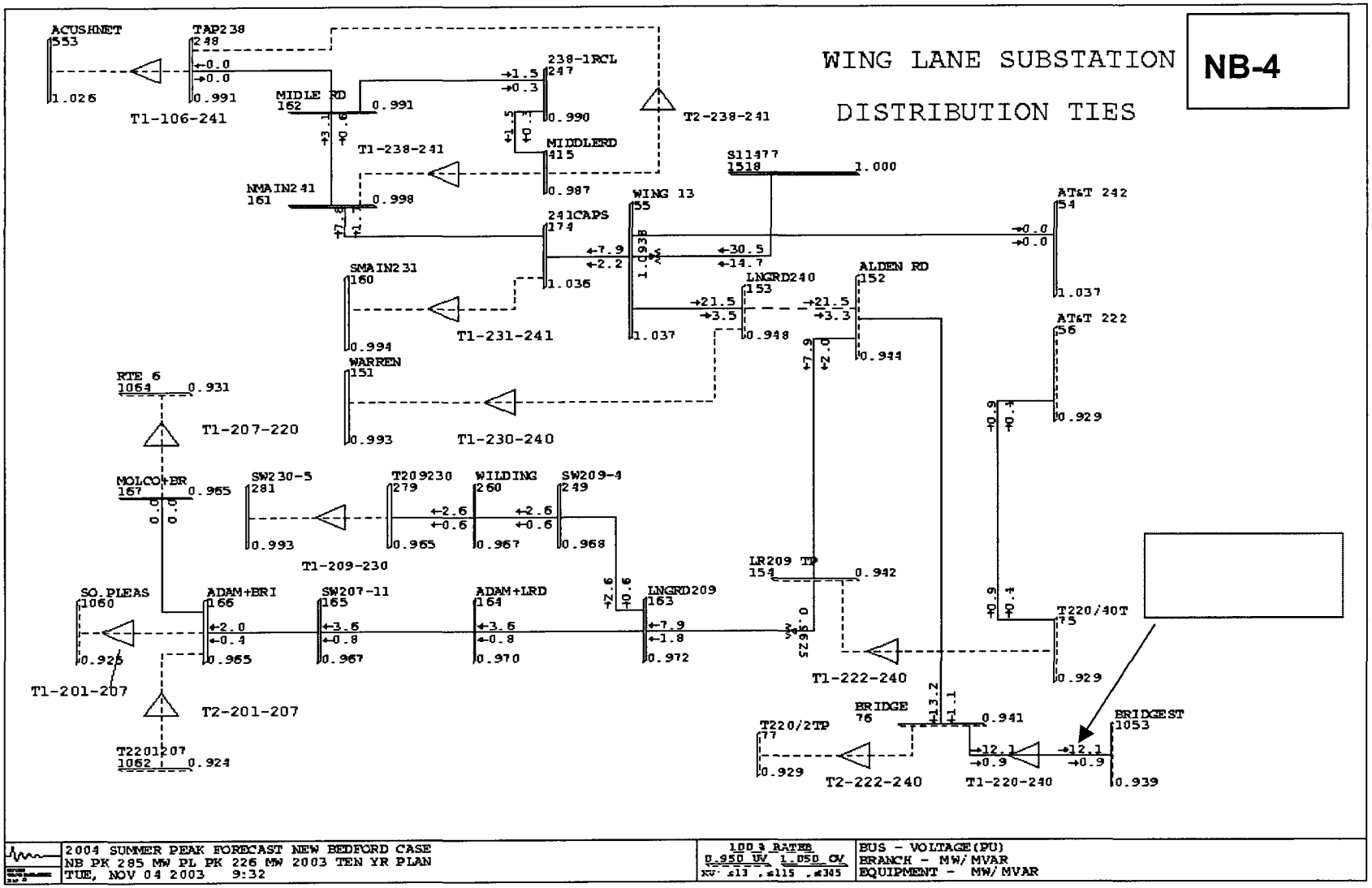
WING LANE SUBSTATION
DISTRIBUTION TIES
NB-4
ACUSHNET 553 1.026
TAP238 248 0.991
T1-106-241
MIDLE RD 162 0.991
238-1RCL 247 0.990
T2-238-241
T1-238-241
MIDDLERD 415 0.987
NMAIN241 161 0.998
S11477 1518 1.000
WING 13 55 1.037
241CAPS 174 1.036
AT&T 242 54 1.037
SMAIN231 160 0.994
T1-231-241
LNGRD240 153 0.948
ALDEN RD 152 0.944
AT&T 222 56 0.929
WARREN 151 0.993
T1-230-240
RTE 6 1064 0.931
T1-207-220
MOLCO+BR 167 0.965
SW230-5 281 0.993
T209230 279 0.965
WILDING 260 0.967
SW209-4 249 0.968
T1-209-230
LR209 TP 154 0.942
SO.PLEAS 1060 0.926
ADAM+BRI 166 0.965
SW207-11 165 0.967
ADAM+LRD 164 0.970
LNGRD209 163 0.972
T220/40T 75 0.929
T1-222-240
T1-201-207
T2-201-207
T220120T 1062 0.924
BRIDGE 76 0.941
T220/2TP 77 0.929
T2-222-240
T1-220-240
BRIDGEST 1053 0.939
2004 SUMMER PEAK FORECAST NEW BEDFORD CASE
NB PK 285 MW PL PK 226 MW 2003 TEN YR PLAN
TUE, NOV 04 2003 9:32
100 % RATEB
0.950 UV 1.050 OV
BUS - VOLTAGE(PU)
BRANCH - MW/MVAR
EQUIPMENT - MW/MVAR

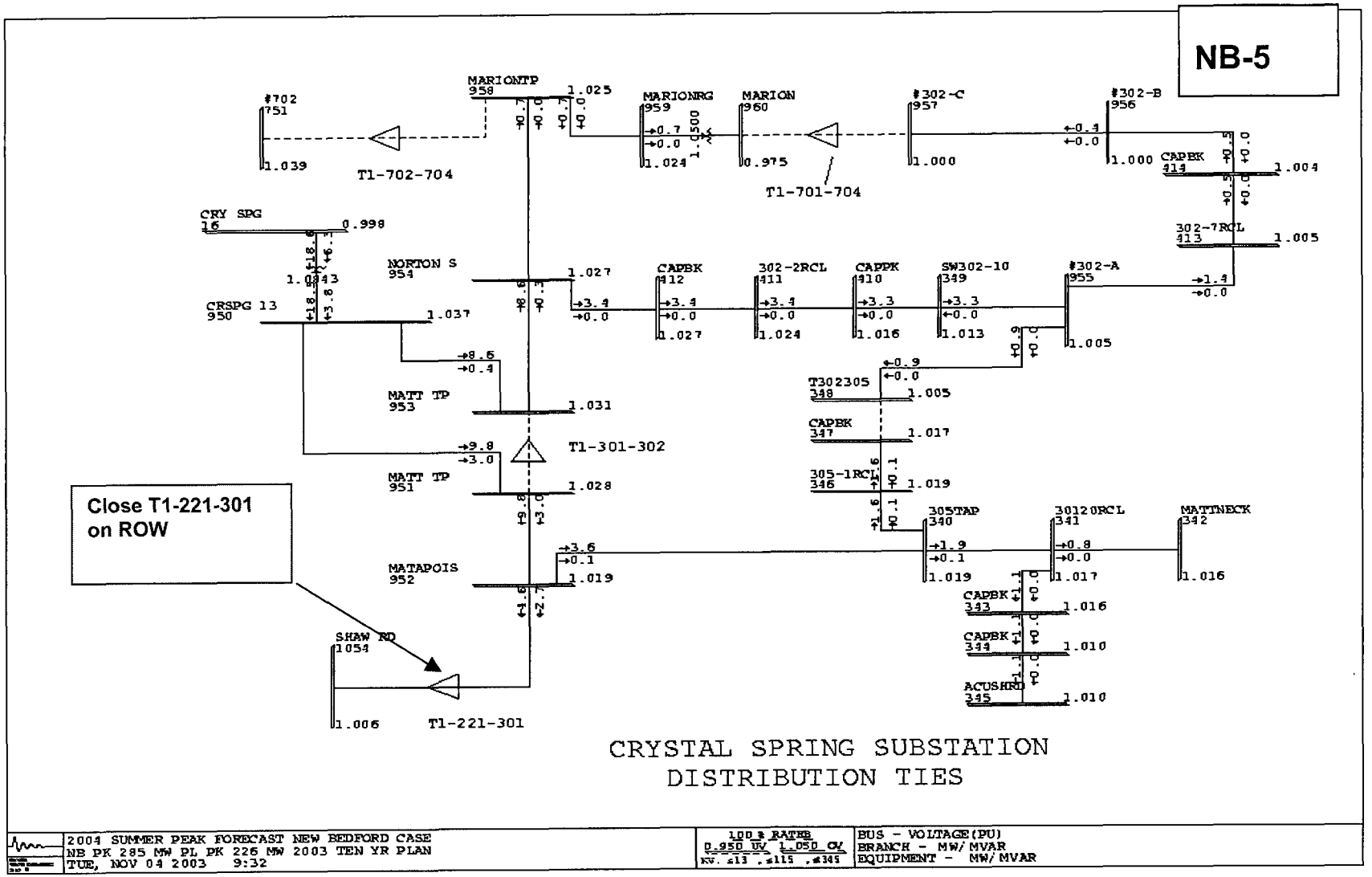
NB-5
Close T1-221-301 on ROW
MARIONTP 958
MARIONRG 959
MARION 960
#302-C 957
#302-B 956
#702 751
T1-702-704
T1-701-704
CAPBK 414
302-7RCL 413
CRY SPG 16
NORTON S 954
CAPBK 412
302-2RCL 411
CAPPK 410
SW302-10 349
#302-A 955
CRSPG 13 950
MATT TP 953
T302305 348
CAPBK 347
T1-301-302
MATT TP 951
305-1RCL 346
305TAP 340
30120RCL 341
MATTNECK 342
MATAPOIS 952
CAPBK 343
CAPBK 344
ACUSHRD 345
SHAW RD 1054
T1-221-301
CRYSTAL SPRING SUBSTATION
DISTRIBUTION TIES
2004 SUMMER PEAK FORECAST NEW BEDFORD CASE
NB PK 285 MW PL PK 226 MW 2003 TEN YR PLAN
TUE, NOV 04 2003 9:32
100% RATEB
0.950 UV 1.050 OV
KV. ≤13 , ≤115 , ≤345
BUS - VOLTAGE(PU)
BRANCH - MW/MVAR
EQUIPMENT - MW/MVAR

2003 5/10 Year Plan - Year 2004 DSS Line Load Transfers - New Bedford District

BULK SUBSTATION DSS LINE SINGLE-CONTINGENCY ANALYSIS

* Coincident Feeder peaks at Forecasted Summer 2004 District Peaks
* Switching Sequences and Effects of Load Transfer Under Coincident Peak Conditions

CIRCUIT NUMBER	COINCIDENT PEAK LOAD (MW)	(MX)	(MVA)	NUMBER CUSTOMERS	BACKUP CIRCUIT	BACKUP STATION	SWITCHING ACTIONS	BACKUP CIRCUIT LOAD (BEFORE TRANSFER) (MW)	(MX)	(MVA)	(AFTER TRANSFER) (MW)	(MX)	(MVA)	BACKUP CIRCUIT SCADA LIMITS NORMAL (MVA)	LTE (MVA)	STE (MVA)	TRIP (MVA)	PROBLEM AREAS
Arsene Street Substation																		
220	11.2	0.4	11.2	3583	240	Wing Lane	CLOSE T1-220-240 OPEN 22042	9.2	2.3	9.5	20.6	2.8	20.8	17.0	18.5	19.0	22.0	#240 Ckt 477 ACSR 6 > 20.6 MVA LTE Low Voltages #201 Ckt Fairhaven
221	4.6	2.5	5.2	1097	301	Crystal Spg.	CLOSE T1-221-301 OPEN 22142	5.2	0.2	5.2	9.8	3.0	10.2	12.0	12.3	13.0	13.0	
222	0.9	0.5	1.0	22	242	Wing Lane	CLOSE AT&T TIE OPEN 22242 OR CLOSE T2-220-222	0.0	0.0	0.0	0.9	0.5	1.0	11.5	11.5	12.0	32.0	

2004 T&D OPERATING STUDY
New Bedford District

BELL ROCK ROAD SUBSTATION #661

ASSONET DISTRIBUTION SUBSTATION #647

Bell Rock Road Substation #661 and Assonet Substation #647 serve a power supply area consisting of portions of the Town of Freetown. During the summer of 2003, peak load on both stations coincident with New Bedford District on 8/22/03 13:00 hours was 4.6 MVA.

Bell Rock Road Substation #661 consists of two (2) 115/34.5 kV transformers:

#634: Allis-Chalmers 15/20(FUT)/25(FUT) MVA 115/34.5 kV
#635: Allis-Chalmers 15/20(FUT)/25(FUT) MVA 115/34.5 kV

Assonet Substation #647 currently consists of one (1) 34.5/13.2 kV autotransformer:

#635: Westinghouse 5/6 MVA 34.5/13.2 kV

A substation upgrade project at Assonet Substation #647 that is currently in-progress will result in the retirement of the existing station and transformer and result in a new, double-ended 34.5/13.2kV station with two (2) 34.5/13.2 kV transformers:

#634: Virginia Transformer 15 MVA 34.5/13.2 kV
#635: Virginia Transformer15 MVA 34.5/13.2 kV

Bell Rock Substation #661 feeds Assonet Substation #647 via a single 4-mile 336 Aluminum 34.5kV spacer cable overhead distribution supply line, rated for 24 MVA. A 2nd 34.5kV underground cable between these two stations, a direct buried HMW 250 kcmil cable, was retired-in-place in 1996 due to multiple irreparable defects. Transformers at both Bell Rock and Assonet Substations are not equipped with fans. Accordingly, loss-of-life overload ratings are not supplied for these transformers.

Overload Ratings:

Transformer	Nameplate	Summer Normal Rating No Loss of Life	Summer 12 Hour LTE Rating 1% Loss of Life
Bell Rock #634	15/20(FUT)/25(FUT) MVA	15 MVA	15 MVA
Bell Rock #635	15/20(FUT)/25(FUT) MVA	15 MVA	15 MVA
Existing Assonet #635	5/6 MVA	6 MVA	6 MVA
Proposed Assonet #634	15 MVA	15 MVA	15 MVA
Proposed Assonet #635	15 MVA	15 MVA	15 MVA

Station Capabilities:

Bell Rock Road #661

Total Station Capacity (N-0) Normal Ratings	Station Firm Capacity (N-1) LTE Ratings	Load Transfers (MVA)	Total LCC (LTE + Transfers)
30 MVA	15 MVA	0 MVA	15 MVA

Assonet #647 (Existing)

Total Station Capacity (N-0) Normal Ratings	Station Firm Capacity (N-1) LTE Ratings	Load Transfers (MVA)	Total LCC (LTE + Transfers)
6 MVA	0 MVA	3.9 MVA	3.9 MVA

Assonet #647 (Proposed)

Total Station Capacity (N-0) Normal Ratings	Station Firm Capacity (N-1) LTE Ratings	Load Transfers (MVA)	Total LCC (LTE + Transfers)
24 MVA	0 MVA	3.9 MVA	3.9 MVA

Station Load Forecast:

2004	2005	2006	2007	2008
11.8 MW *	11.8 MW	11.8 MW	11.8 MW	11.9 MW

*Approx. 8 MW of station load is considered interruptible for a contingency event

The upgrade of Assonet Substation #647 to a double-ended station with two (2) transformers will be complete by December, 2003. The contingency analysis discussed below assumes the new station configuration.

Switching Actions:

Loss of #635 34.5kV Line Between Bell Rock and Assonet

Open: Circuit Breaker #60762 at Assonet
Circuit Breaker #60662 at Assonet
Recloser 605-1 at Assonet
Recloser 604-1 on Chace Rd.

Close: Tie Switch T1-102-605 on Bullock Rd. at Chace Rd.
Tie Switch T1-602-604 on Washburn Rd.

Put #605 circuit regulators on Slab Bridge Road in automatic mode per online SCADA instructions #605 circuit page #1.

Stop & Shop Load of approximately 8 MW* on circuit #607 must be shed, as it cannot be backed up for loss of the 34.5kV feed to Assonet Substation.

Circuit #605 load in excess of 3.9 MVA must be shed to respect voltage drop and ampacity limits on portions of the Industrial Park #102 circuit that have not yet been upgraded from 1/0 ACSR to 795 Hendrix spacer cable. This upgrade is discussed below.

Loss of #1 Transformer at Assonet Substation #647

Open: Circuit Breaker #63562 at Assonet
Circuit Breaker #60662 at Assonet

Close: Tie Switch #T1-606-607 at Assonet

Transformer #2 carries full station load, no distribution transfers required.

Loss of #2 Transformer at Assonet Substation #647

Open: Circuit Breaker #63572 at Assonet
Circuit Breaker #60762 at Assonet

Close: Tie Switch #T1-606-607 at Assonet

Transformer #1 carries full station load, no distribution transfers required.

Loss of #1 Transformer or #D21 115kV Line at Bell Rock Road Substation #661

Open: Circuit Breaker #63412 at Assonet
Circuit Breaker #634B12 at Assonet

Close: Circuit Breaker #635B12 At Assonet
Tie Switch #T1-606-607 at Assonet (on-schedule condition is normally closed)

Transformer #2 carries full station load, no distribution transfers required.

Loss of #2 Transformer or #N12 115kV Line at Bell Rock Roa Substation #661

Note: Loss of line or transformer will cause no outage at Bell Rock or Assonet. This transformer is normally energized, but carries no load due to open status of #635B12 breaker.

Open: Circuit Breaker #63512 at Assonet
Circuit Breaker #635B12 at Assonet (on-schedule condition is normally close)

Close: Tie Switch #T1-606-607 at Assonet (on-schedule condition is normally open)

Transformer #1 carries full station load, no distribution transfers required.

Distribution Feeder Switching:

After system upgrades in support of the Stop & Shop interconnection project, the 13.2kV system served by the Bell Rock Road and Assonet Substations will comprise three (3) 13.2kV feeder circuits. These are circuit #605, which serves approximately 5 MW of native load in the Town of Freetown, and circuits #606 / #607, which will supply approximately 8 MW of load at the Stop & Shop Warehouse facility.

Loss of #605 Circuit:

The contingency switching plan for circuit #605 is identical to that for loss of the #635 34.5kV supply line to Assonet, as discussed above:

Open: Circuit Breaker #60762 at Assonet
Circuit Breaker #60662 at Assonet
Recloser 605-1 at Assonet
Recloser 604-1 on Chace Rd.

Close: Tie Switch T1-102-605 on Bullock Rd. at Chace Rd.
Tie Switch T1-602-604 on Washburn Rd.

Put #605 circuit regulators on Slab Bridge Road in automatic mode per online SCADA instructions #605 circuit page #1.

Stop & Shop Load of approximately 8 MW* on circuit #607 must be shed, as it cannot be backed up for loss of the 34.5kV feed to Assonet Substation.

Circuit #605 load in excess of 3.9 MVA must be shed to respect voltage drop and ampacity limits on portions of the Industrial Park #102 circuit that have not yet been upgraded from 1/0 ACSR to 795 Hendrix spacer cable. This upgrade is discussed below.

Loss of #606 or #607 Circuits:

These two (2) 13.2kV circuits comprise a redundant primary feed to the Stop & Shop facility. On loss of the #606 primary feed, transfer Stop & Shop to the secondary #607 13.2kV feed by closing tie switch at their switchgear. The device number has not yet been assigned.

Total Transfer: 3.9 MVA (to Industrial Park for loss of #605 circuit feed)

Summary of Concerns: Bell Rock Rd. Substation #661 / Assonet Substation #647

Station:

Based on load projections, Bell Rock Road Substation #661 has adequate firm capability due to redundant supply offered by two (2) 15 MVA transformers through the load forecast horizon.

Also based on load projections, Assonet Substation #647, as per new design, has adequate firm capability due to redundant supply offered by two (2) 15 MVA transformers through the load forecast horizon.

For loss of the #635 34.5kV distribution supply line from Bell Rock to Assonet, the firm supply of 3.9 MVA offered by the transfer capability to Industrial Park #102 is not adequate to supply 5 MW Summer peak load of the #605 circuit, even after Stop & Shop interruptible load is shed. This result is identical for loss of the #605 circuit out of Assonet, whereby the entire circuit must be transferred to the Industrial Park #102 circuit.

Transmission:

From a station capacity perspective, contingency outages of any of the three (3) 115kV lines emanating Bell Rock Road (#N12 to Somerset, #D21 to High Hill S/S, or #L14 to Newport) are not problematic where firm supply to Bell Rock/Assonet is concerned. The 115kV lines, and the 115kV "side" of Bell Rock Substation, are National Grid facilities and are their responsibility.

DSS/Distribution:

1. The Bell Rock – Assonet power supply area's firm native load of 5 MVA served by the #605 circuit exceeds the 3.9 MVA firm capability offered by the Industrial Park #102 circuit, the only backup supply available in the area.

   Post contingency and after load transfers are complete, approx. 1.9 miles of 1/0 ACSR open-wire conductor will be overloaded at 24% beyond its 5 MVA LTE rating, with 1.1 MVA of load at risk at Assonet. This section of line is of sag-limited construction, and has a reduced rating owing to this deficiency. Refer to loadflow diagrams **NB-6** through **NB-8.**

   There is a deferred two-year construction project to upgrade the limiting portions of the #102 circuit from the existing sag-limited 1/0 ACSR open-wire construction to 795 Hendrix spacer cable, for 1.9 miles from the point where the new construction ends, to tie switch #T1-102-605. This upgrade project is approximately ½ complete, and the remainder should be completed by Summer 2004. This upgrade would also address reliability issues on circuits #102 and #605, as circuit #605 consistently ranks poorly in Customer Outage Hours (COH) and number of outage incidents. The outages, generally causes by tree and animal contacts and lightning, would be substantially lessened by upgrading construction from bare open-wire construction to covered Hendrix spacer cable construction. The cost estimate to complete this upgrade is $350k in 2004.

13.2 kV Feeder	Backup Circuit	Summer LTE Rating in MVA	Projected % of LTE 2004	Projected % of LTE 2008
Assonet. #605	Industrial Park #102	12.0 MVA (Limiting Section 5 MA)	24%	68%

4kV Substation and Distribution:

There are no 4kV substations or circuits served by the Bell Rock – Assonet power supply area.

Proposed Integrated Plan:

The suggested actions table listed below will address all of the capacity concerns in the Bell Rock #661 – Assonet #647 power supply area.

Recommended course of action for Bell Rock - Assonet

Action	Year needed	Estimated Cost
⇒ Upgrade 1.9 miles 1/0 ACSR conductor to 795 Hendrix spacer cable	2004	$350 k

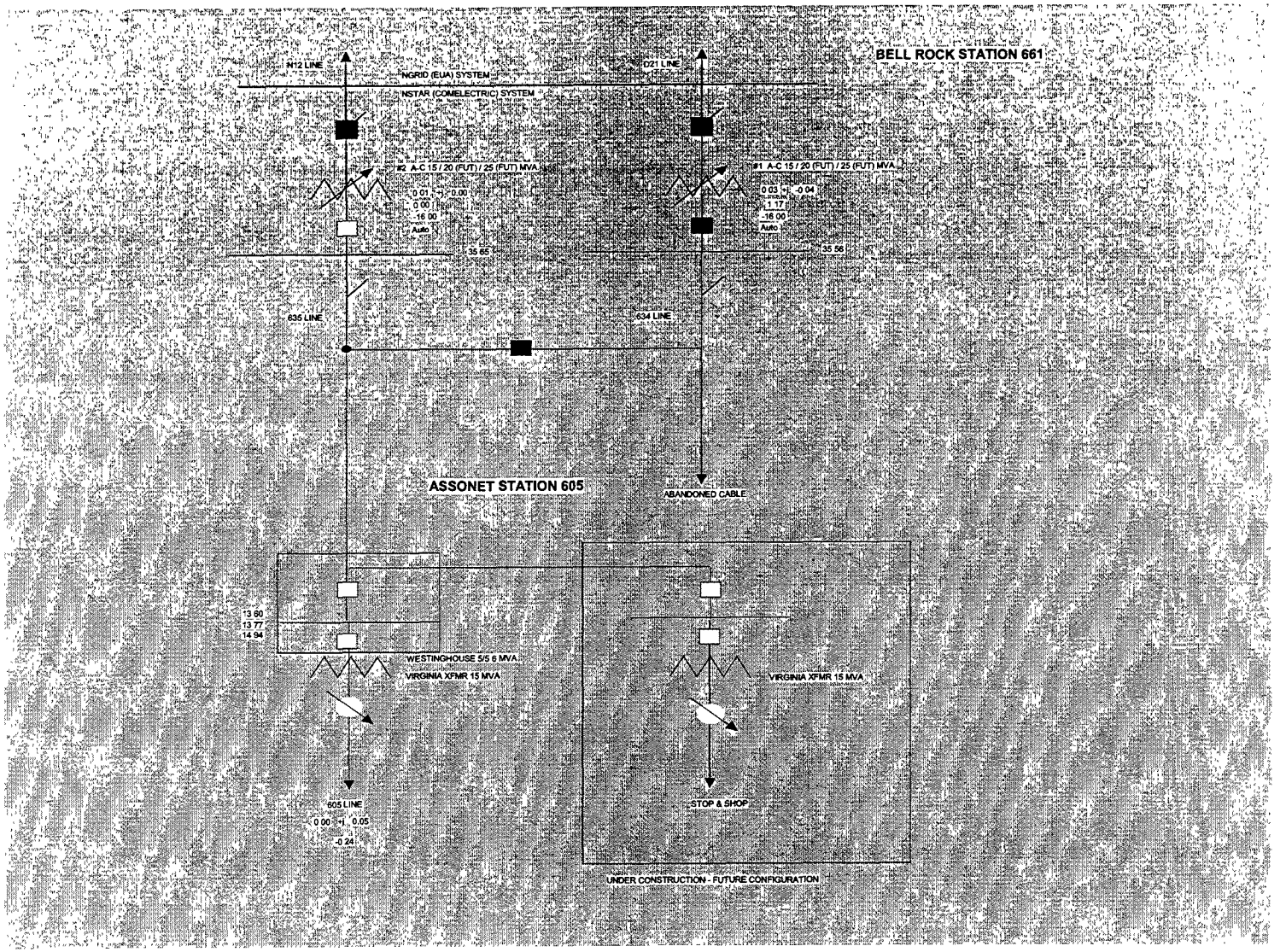
BELL ROCK STATION 661
N12 LINE
NGRID (EUA) SYSTEM
NSTAR (COMELECTRIC) SYSTEM
D21 LINE
#2 A-C 15 / 20 (FUT) / 25 (FUT) MVA
0.01 +j 0.00
0.00
-16.00
Auto
35.65
#1 A-C 15 / 20 (FUT) / 25 (FUT) MVA
0.03 +j -0.04
1.17
-16.00
Auto
35.56
635 LINE
634 LINE
ASSONET STATION 605
ABANDONED CABLE
13.60
13.77
14.94
WESTINGHOUSE 5/5.6 MVA
VIRGINIA XFMR 15 MVA
VIRGINIA XFMR 15 MVA
605 LINE
0.00 +j 0.05
-0.24
STOP & SHOP
UNDER CONSTRUCTION - FUTURE CONFIGURATION

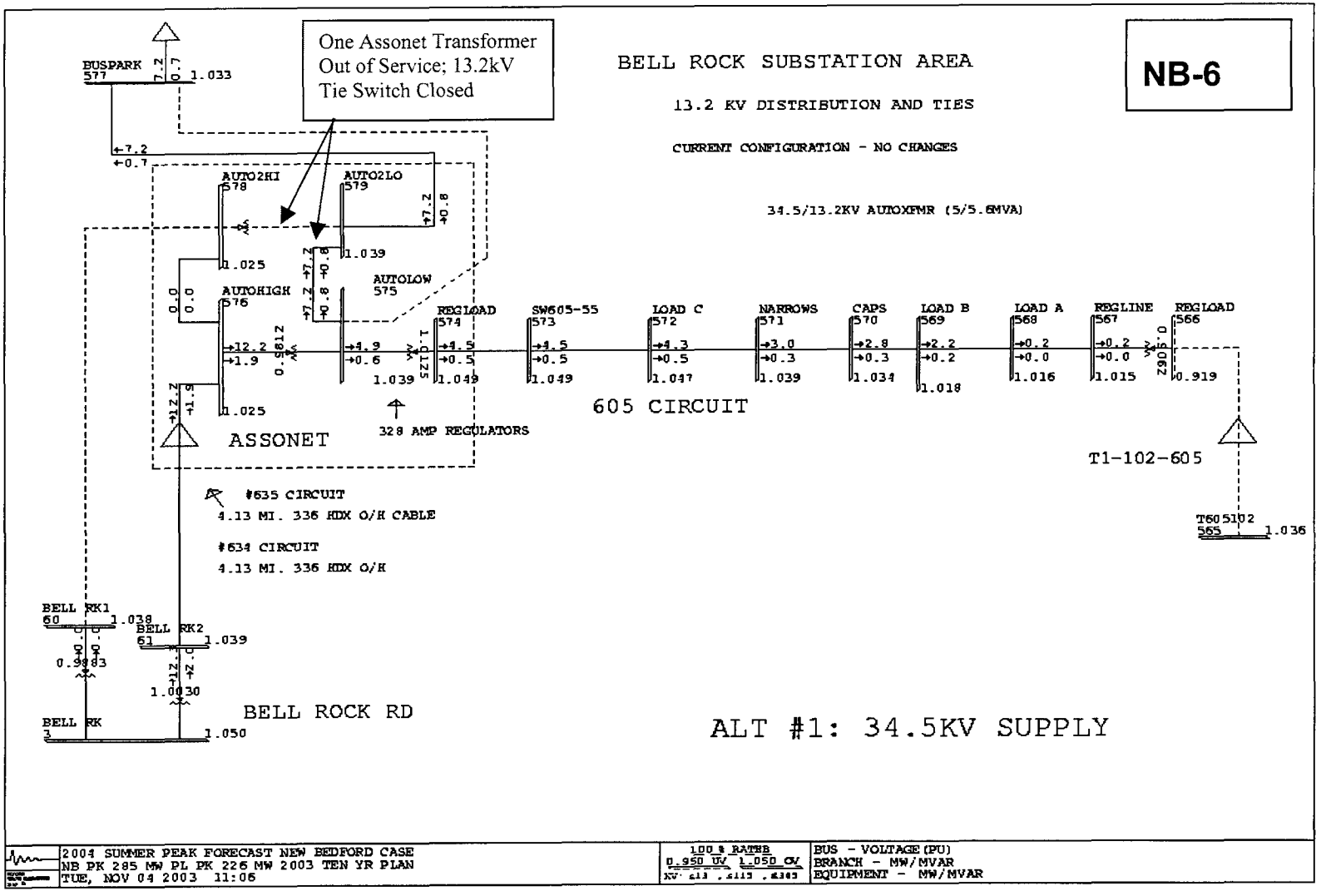

BELL ROCK – ASSONET 115/34.5/13.2kV BULK SUPPLY SYSTEM, AFTER COMPLETION OF UPGRADE PROJECT

Loss of one Transformer at Assonet

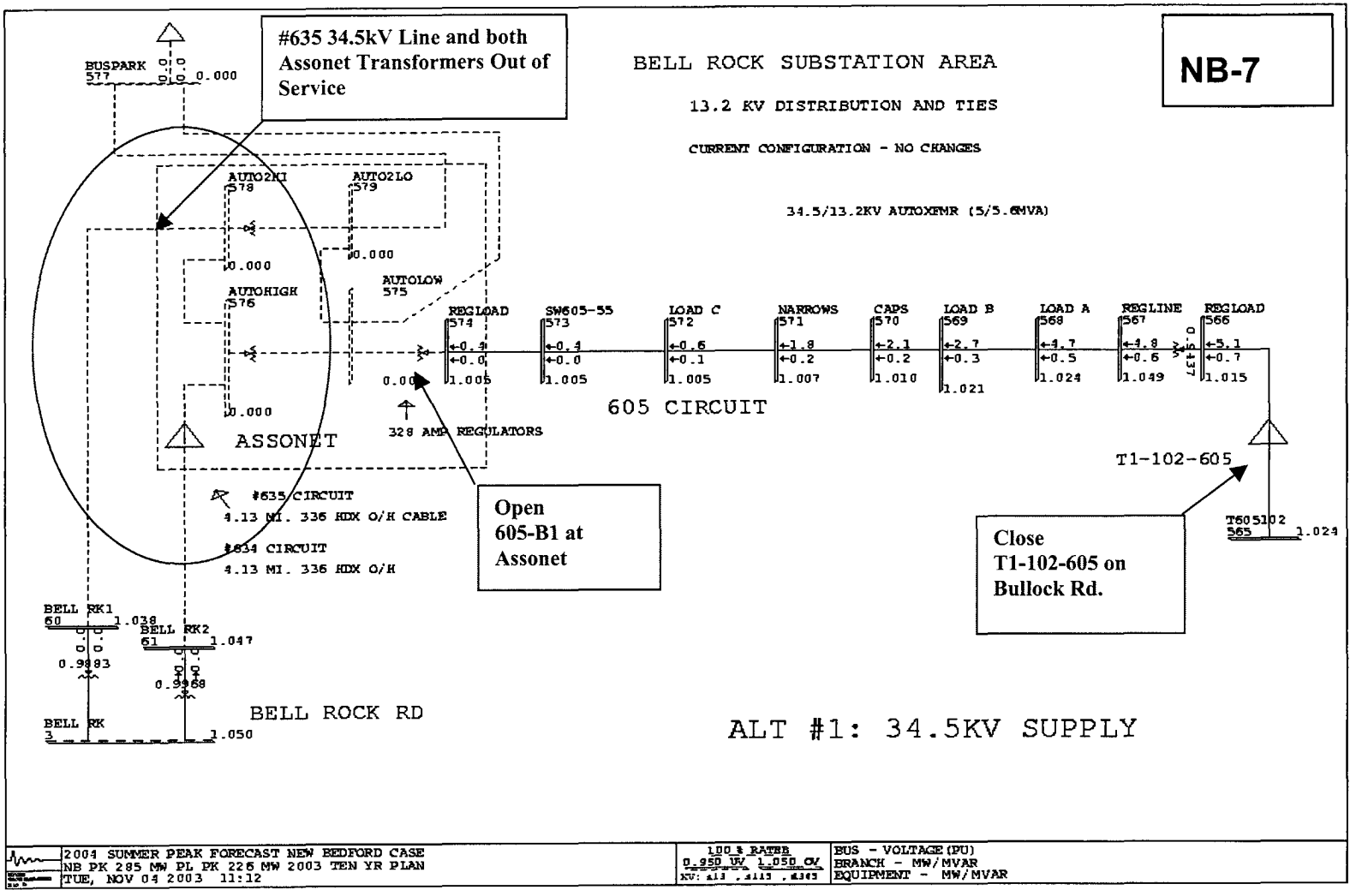

BELL ROCK – ASSONET 115/34.5/13.2kV BULK SUPPLY SYSTEM, AFTER COMPLETION OF UPGRADE PROJECT

Loss of 34.5kV feed and both transformers at Assonet

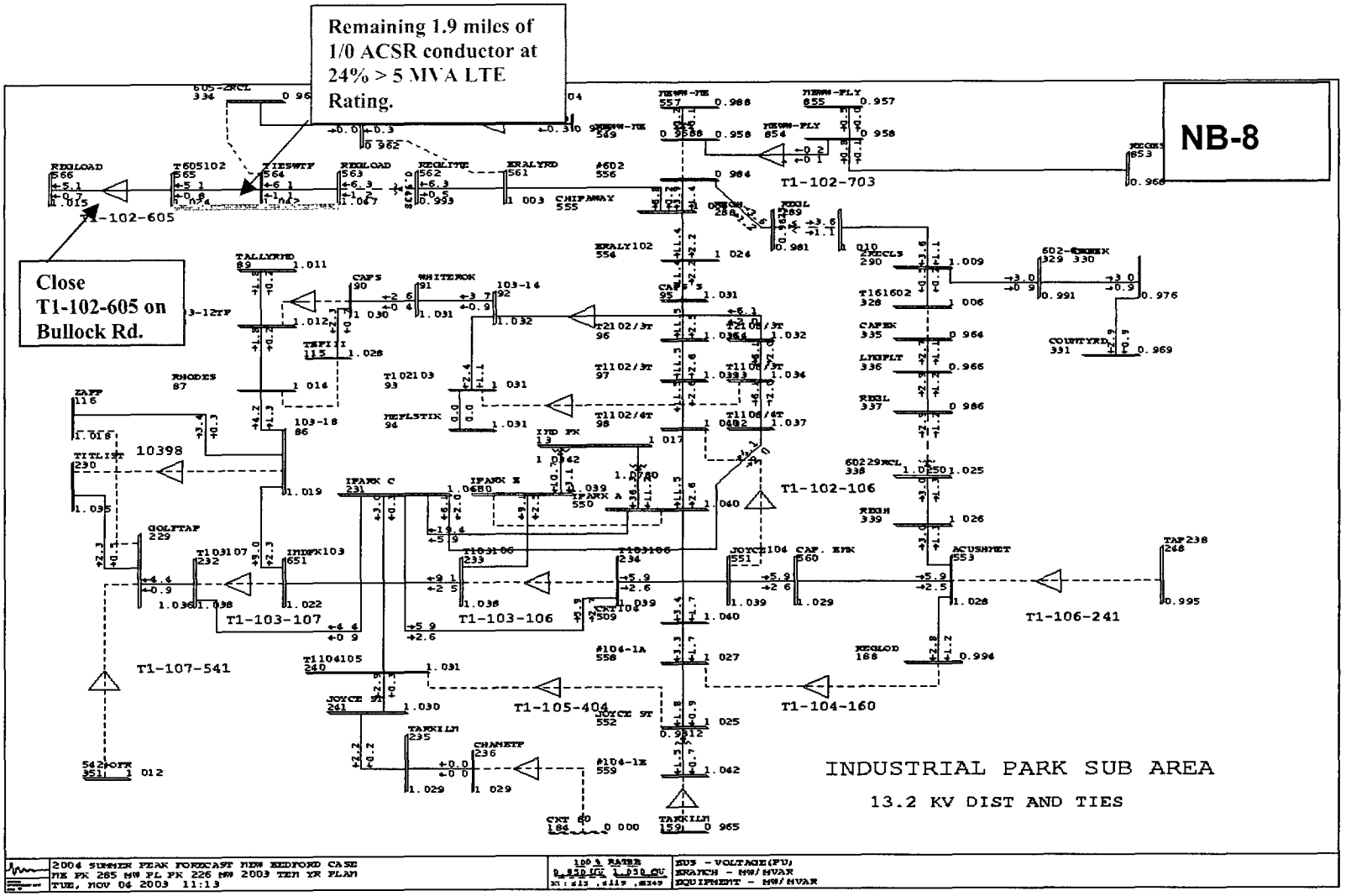

BELL ROCK – ASSONET 115/34.5/13.2kV BULK SUPPLY SYSTEM, AFTER COMPLETION OF UPGRADE PROJECT

Loss of 34.5kV feed and both transformers at Assonet, load transfer to Industrial Park #102 circuit

2004 T&D OPERATING STUDY
New Bedford District

CROSS ROAD SUBSTATION #651

Cross Road Substation #651 serves a power supply area consisting of the all or portions of the Towns Dartmouth and Westport, and portions of the City of New Bedford. During the summer of 2003, peak station load coincident with New Bedford District on 8/22/03 13:00 hours was 30.8 MVA, with 13.8 MVA served by the #111 transformer at 17.2 MVA served by the #109 transformer.

Cross Road Substation #651 consists of two 115/13.2 kV transformers:

#111: General Electric 30/40 [44.8] MVA 110/13.8 kV
#109: Allis-Chalmers 12/16/20 [22.5] MVA 115/13.2 kV

Overload Ratings:

Transformer	Nameplate	Summer Normal Rating No Loss of Life	Summer 12 Hour LTE Rating 1% Loss of Life
#111	30/40 [44.8]	54.4 MVA	62.6 MVA
#109	12/16/20 [22.5]	27.7 MVA	32.9 MVA

Station Capabilities:

Total Station Capacity (N-0) Normal Ratings	Station Firm Capacity (N-1) LTE Ratings	Load Transfers (MVA)	Total LCC (LTE + Transfers)
82.1 MVA	20 MVA*	11.1 MVA	31.1 MVA

Station Load Forecast:

2004	2005	2006	2007	2008
30.9 MW	31.4 MW	32.0 MW	32.7 MW	33.5 MW

Switching Actions:

Loss of #109 Transformer

Open: Circuit Switcher 10912
Main Circuit Breaker 109B12
Feeder Breaker #54112

Close: Bus Tie Breaker ##T1-12
Tie Switch #T1-107-541 on ROW

Loss of #111 Transformer

Open: Circuit Switcher 11112
Main Circuit Breaker 111B12
Feeder Breaker #54112

Close: Bus Tie Breaker ##T1-12
Tie Switch #T1-107-541 on ROW

Results:

For loss of the #109 transformer, the #111 transformer will exceed its 20 MVA rating limitation by 22%. The #111 transformer was installed in a "temporary" configuration to replace a 12/16/20 MVA unit, which failed during the Summer of 2002. The temporary configuration involved secondary connections from the transformer 13.2kV bushings to the low voltage bus at Cross Road, which were run in ducts across the ground. Since only one (1) set of secondary connections were run, for a transformer designed for bifurcated secondary connections to an underground cable system, the single set of secondary conductors which were installed are only good for 20 MVA maximum.

For loss of the #111 transformer, the #109 transformer carries 25.6 MVA, within its 32.9 MVA LTE rating.

Total Transfer: 11.1 MVA

Distribution Feeder Switching:

The transfers and switching operations for each distribution supply feeder are shown on the attached table.

Summary of Concerns: Cross Road Substation #651

Station:

Based on load projections, Cross Road Substation #651 has inadequate firm capability through load forecast year 2013 for a contingency outage of the #109 transformer bank. Please reference power flow diagrams **NB-9** through **NB-16**.

For loss of the #109 transformer bank at both current and forecasted Summer peak load levels, the Cross Road #111 transformer will exceed the 20 MVA limitation posed by its "temporary" secondary connection by 22% in Summer 2004. The secondary connections of the #111 transformer, including the 4/0 copper bus conductor on the Cross Road 13.2kV bus, would have to be upgraded to permit rating these connections at the full transformer LTE rating of 62.6 MVA.

Transmission:

Cross Road Substation #651 is served by two (2) 115kV radial lines from High Hill Switching Station #644. Due to an inadequate switching arrangement on the 115kV side of Cross Road Substation #651, an outage of either 115kV line causes a "forced" outage of one transformer at Cross Road, because the outaged transformer bank cannot be switched over the unaffected 115kV line. Loss of the #111 line is not problematic, as the resulting loss of the #111 transformer, as previously

described, is not problematic. Loss of the #109 line causes a forced outage of both the Cross Road #109 transformer at both transformers at Fisher Road Substation #657, requiring load shedding until the 115kV line and transformers are restored. This is covered under *345/115kV Bulk Transmission Facility Outages*.

DSS/Distribution:

Of the four (4) 13.2kV DSS lines served out of Cross Road Substation, contingency backup of two (2) can be thermally limiting:

1. Contingency backup of one Cross Road Substation Circuit, #533, may cause the Cross Road #111 transformer to exceed its identified 20 MVA limitation when the circuit is backed up by the Cross Road #531 feeder circuit. Post contingency, and after additional transfers of load to the #506 and #501 circuits fed out of Pine Street Substation (via DSS lines #70 and #72) in New Bedford, load on the Cross Road #111 transformer will be nearly 100% of the 20 MVA limited ration.

2. Contingency backup of the Cross Road #531 circuit requires transfers to the Fisher Road #525 circuit. While the end-state of this transfer is not limiting from a thermal or voltage standpoint, the transfer requires over twenty (20) distribution switching operations to permit the Fisher Road substation to serve the full load of the #531 circuit. Fisher Road Substation has two (2) 115/13.2kV transformers, but only one normally carries load, with the other normally-energized, but with the secondary breaker open. The backup of the #531 circuit requires that the 2nd transformer at Fisher Road, a 10/12 MVA unit, be closed in to share the station load to prevent overload of the 12/16/20 MVA unit. The two transformers at Fisher Road cannot be operated in parallel due to unmatched impedances and ratings. Because the 13.2kV bus ties between the two transformers are non-load-break disconnect switches, the four (4) 13.2kV feeder circuits served by Fisher Road must be transferred off of Fisher Road to adjacent stations (Cross Road and Pine Street), the 13.2kV bus must be de-energized to permit the bus ties to be opened, and then the 13.2kV feeder circuits must be transferred back to Fisher Road. The #531 circuit may then be transferred from Cross Road to Fisher Road, after a total of approximately twenty (20) switching operations over several hours. The installation of a normally-open 13.2kV bus tie breaker at Fisher Road would remedy this situation, and permit both transformers at Fisher Road to carry station load normally.

13.2 kV Feeder	Backup Circuit	Summer LTE Rating in MVA	Projected % of LTE 2004	Projected % of LTE 2008
Cross Road #533	Cross Road #531	19.7	99%	108%
	Pine Street #70	8.8		Cross Road #111
	Pine Street #72	8.8		Transformer is limiting element
Cross Road #531	Fisher Road #525	10.0	109%	Must split Fisher Road bus, overload avoided

4kV Substation and Distribution:

Cross Road Substation #651 does not feed any 4kV distribution substations or circuits. Some limited 4kV stepdown areas exist.

Proposed Integrated Plan:

The suggested actions table listed below will address all of the capacity concerns in the Cross Road Substation #651 power supply area.

Design a more permanent interconnection for the Cross Road #111 transformer, with a transformer pad, and secondary connections rated at least for the full 44.8 MVA top nameplate rating of the transformer. This may also require upgrade of the 4/0 copper 13.2kV wire bus at Cross Road, at a total estimated cost of $260k. This would address post-contingency overload of the #111 transformer for loss of the #109 transformer, and post-contingency overload of the transformer when backing up the #533 circuit.

Install a 13.2kV bus tie breaker at Fisher Road Substation #657. This would permit both transformers at that station to carry load, and would reduce the number of switching operations to back up the Cross Road Substation #531 circuit from about twenty (20) to two (2). Estimated cost is $150k.

As discussed under the #109 115kV line outage under the *345/115kV Bulk Transmission Facility Outages* section, install two (2) 115kV SCADA-controlled motor-operated switches where the #109 and #111 115kV lines enter Cross Road Substation. This would permit either transformer to be fed from either 115kV line, and would prevent forced outage of a transformer bank for an outage of a 115kV line. Estimated cost is $204k.

Recommended course of action for Cross Road Substation #651

Action	Year needed	Estimated Cost
⇒ More permanent, higher-rated connection for Cross Road #111 Transformer	2004	$260K
⇒ Install 13.2kV bus tie breaker at Fisher Road Substation #657	2004	$150K
⇒ Install 115kV SCADA-controlled switches #109/111 lines at Cross Road Sub.	2004	$204K

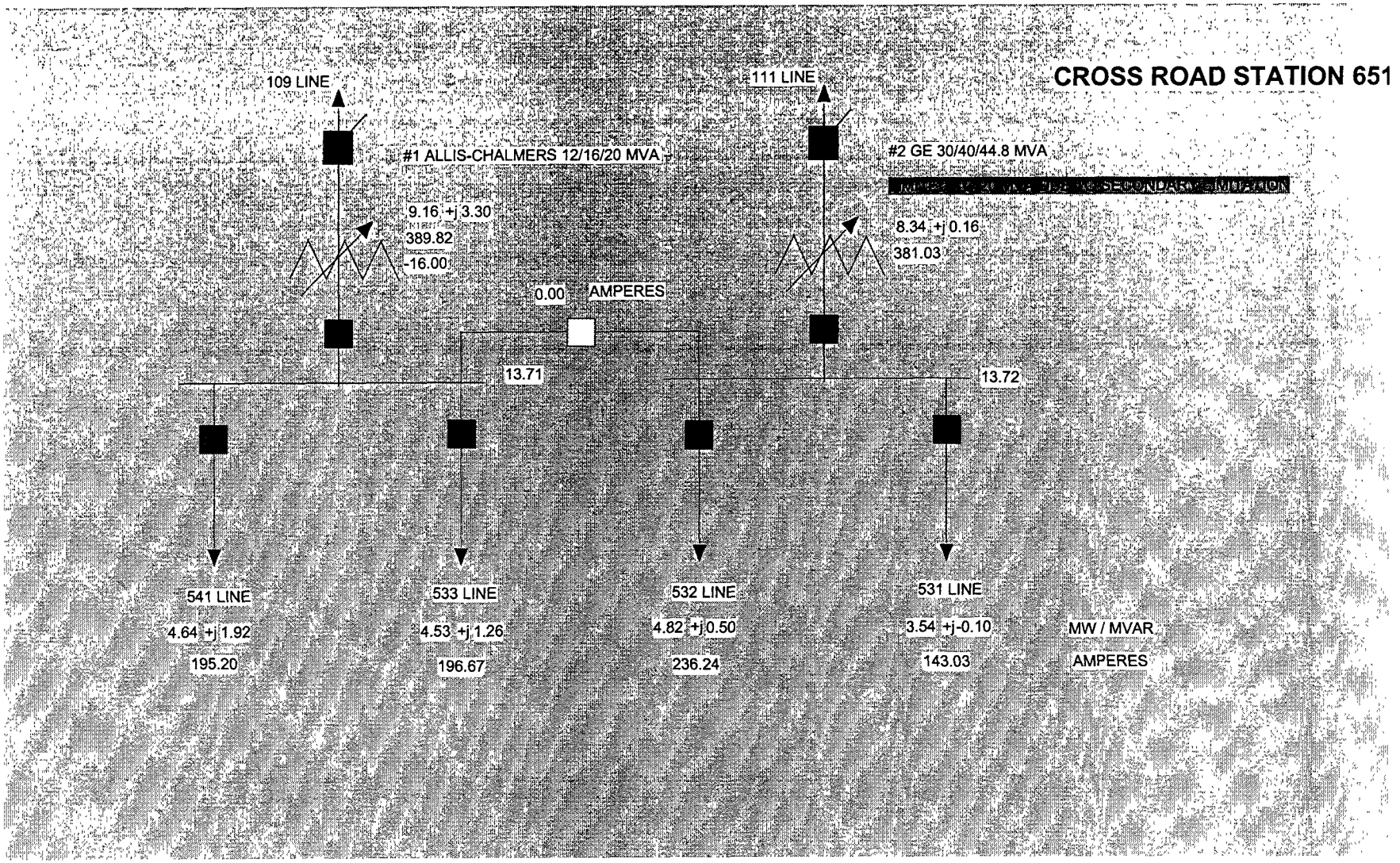
CROSS ROAD STATION 651
109 LINE
111 LINE
#1 ALLIS-CHALMERS 12/16/20 MVA
#2 GE 30/40/44.8 MVA
9.16 +j 3.30
389.82
-16.00
8.34 +j 0.16
381.03
0.00 AMPERES
13.71
13.72
541 LINE
533 LINE
532 LINE
531 LINE
4.64 +j 1.92
195.20
4.53 +j 1.26
196.67
4.82 +j 0.50
236.24
3.54 +j-0.10
143.03
MW / MVAR
AMPERES

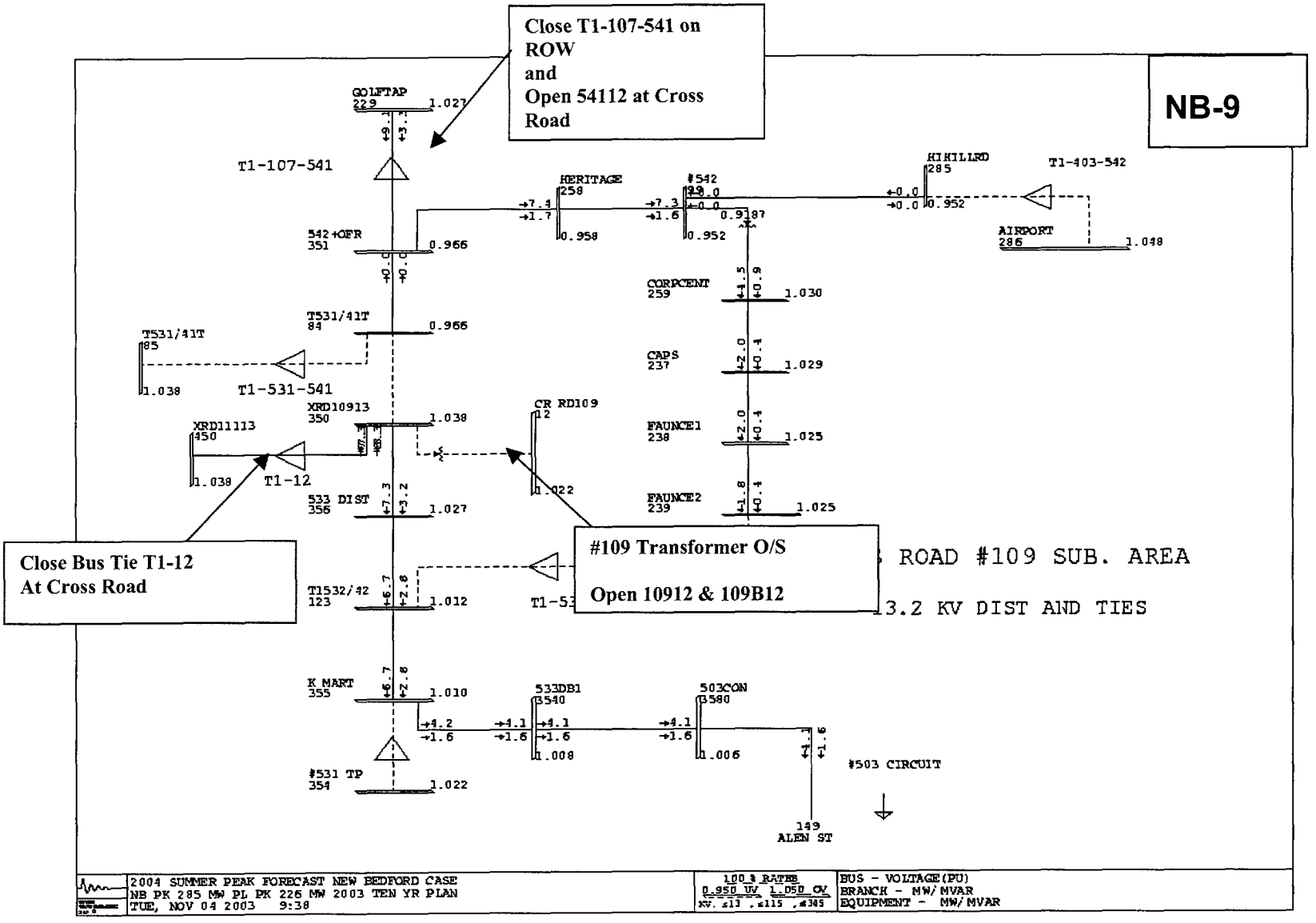
Close T1-107-541 on ROW and Open 54112 at Cross Road
NB-9
GOLFTAP 229 1.027
T1-107-541
HERITAGE 258
#542 93.0
HIHILLRD 285
T1-403-542
AIRPORT 286 1.048
542+OFR 351 0.966
CORPCENT 259 1.030
T531/41T 84 0.966
T531/41T 85
T1-531-541
CAPS 237 1.029
XRD10913 350 1.038
CR RD109 12
XRD11113 450
T1-12
FAUNCE1 238 1.025
533 DIST 356 1.027
FAUNCE2 239 1.025
Close Bus Tie T1-12 At Cross Road
#109 Transformer O/S
Open 10912 & 109B12
ROAD #109 SUB. AREA
3.2 KV DIST AND TIES
T1532/42 123 1.012
K MART 355 1.010
533DB1 3540
503CON 3580
#531 TP 354 1.022
#503 CIRCUIT
149 ALEN ST
2004 SUMMER PEAK FORECAST NEW BEDFORD CASE
NB PK 285 MW PL PK 226 MW 2003 TEN YR PLAN
TUE, NOV 04 2003 9:38
100 % RATES
0.950 UV 1.050 OV
BUS - VOLTAGE(PU)
BRANCH - MW/MVAR
EQUIPMENT - MW/MVAR

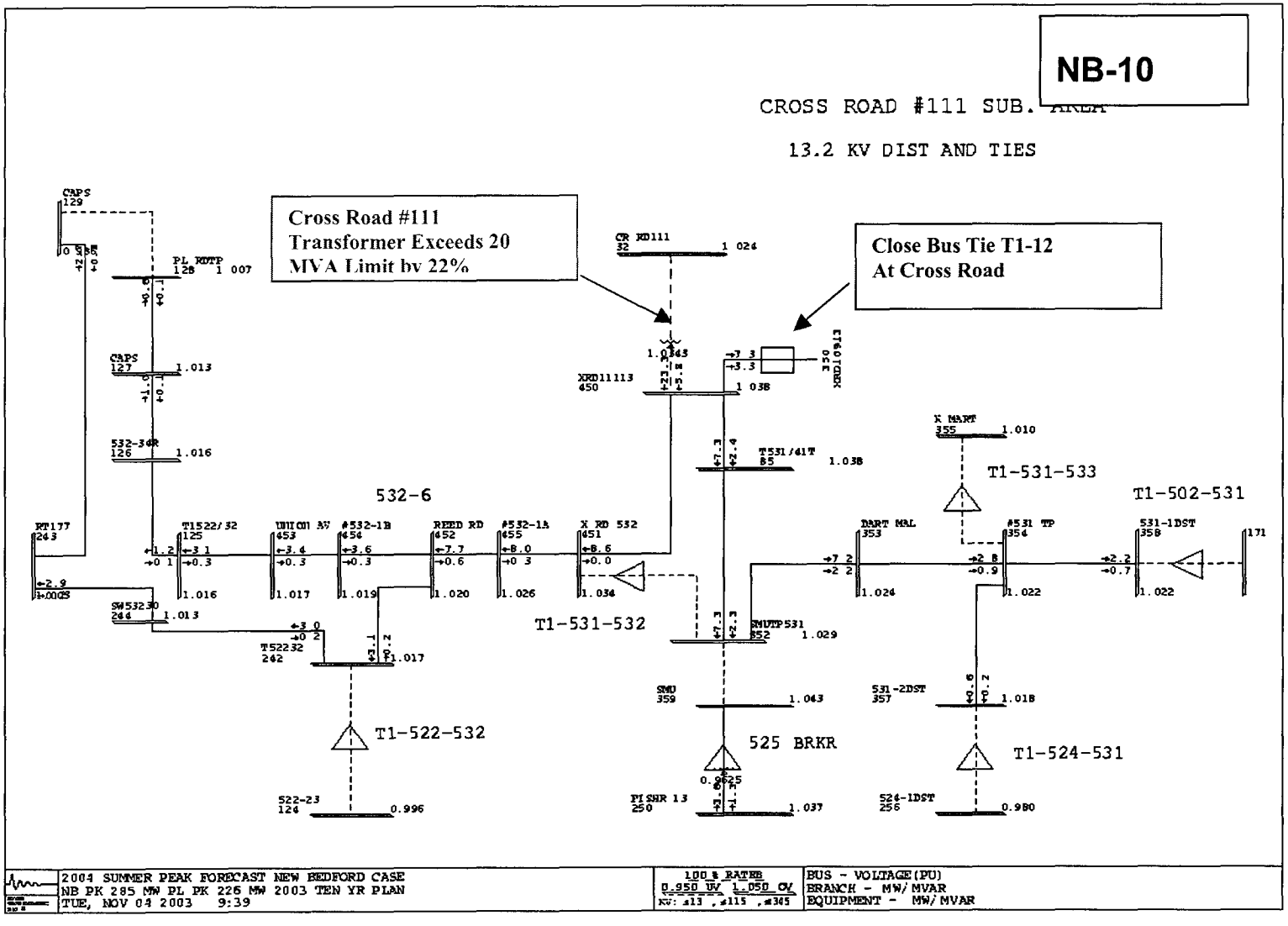
NB-10
CROSS ROAD #111 SUB.
13.2 KV DIST AND TIES
Cross Road #111
Transformer Exceeds 20
MVA Limit by 22%
Close Bus Tie T1-12
At Cross Road
532-6
T1-531-533
T1-502-531
T1-531-532
T1-522-532
525 BRKR
T1-524-531
2004 SUMMER PEAK FORECAST NEW BEDFORD CASE
NB PK 285 MW PL PK 226 MW 2003 TEN YR PLAN
TUE, NOV 04 2003 9:39
100 % RATEB
BUS - VOLTAGE(PU)
BRANCH - MW/MVAR
EQUIPMENT - MW/MVAR

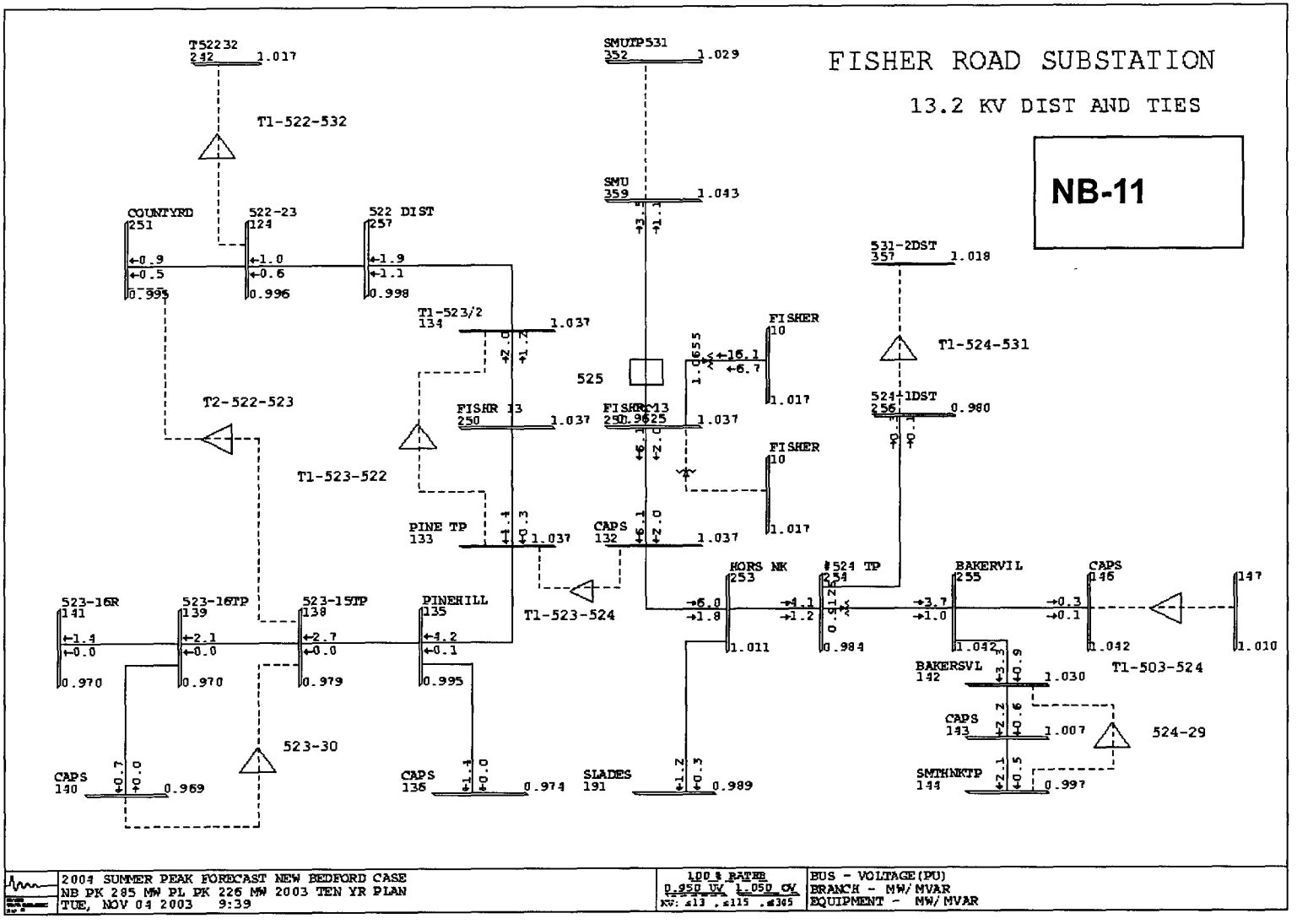
FISHER ROAD SUBSTATION
13.2 KV DIST AND TIES
NB-11
T52232 232 1.017
T1-522-532
SMUTP531 352 1.029
SMU 359 1.043
COUNTYRD 251
522-23 124
522 DIST 257
T1-523/2 134 1.037
T2-522-523
T1-523-522
FISHR 13 250 1.037
525
FISHER 10
1.017
531-2DST 357 1.018
T1-524-531
524-1DST 256 0.980
PINE TP 133 1.037
CAPS 132 1.037
T1-523-524
HORS NK 253
#524 TP
BAKERVIL 255
CAPS 146
147
1.010
T1-503-524
523-16R 141
523-16TP 139
523-15TP 138
PINEHILL 135
0.970
0.979
0.995
1.011
0.984
1.042
BAKERSVL 142 1.030
CAPS 143 1.007
524-29
523-30
CAPS 140 0.969
CAPS 136 0.974
SLADES 191 0.989
SMTHNKTP 144 0.997
2004 SUMMER PEAK FORECAST NEW BEDFORD CASE
NB PK 285 MW PL PK 226 MW 2003 TEN YR PLAN
TUE, NOV 04 2003 9:39
100 % RATEB
0.950 UV 1.050 OV
BUS - VOLTAGE(PU)
BRANCH - MW/MVAR
EQUIPMENT - MW/MVAR

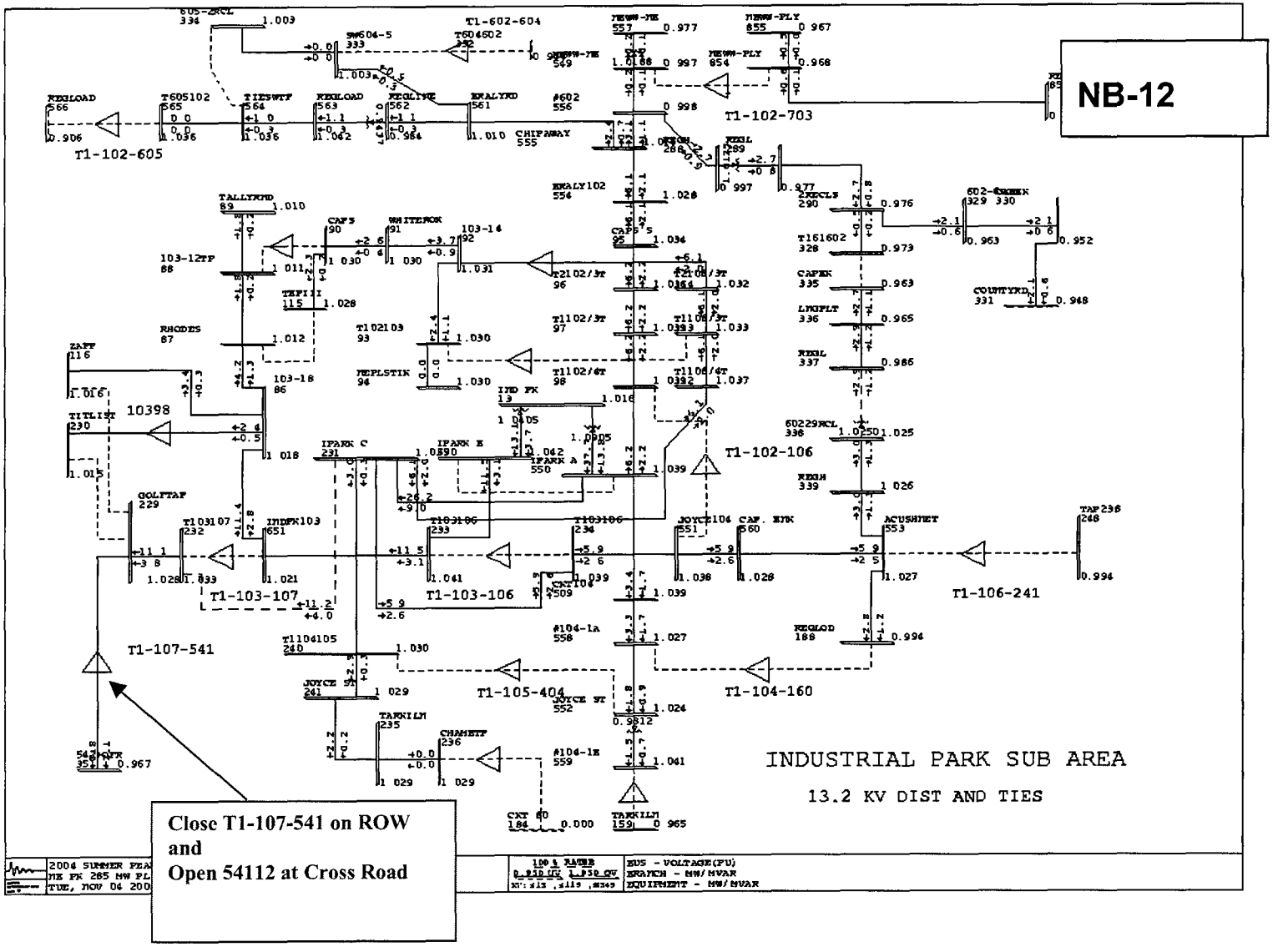
NB-12
T1-102-605
T1-602-604
T1-102-703
T1-102-106
T1-103-107
T1-103-106
T1-106-241
T1-107-541
T1-105-404
T1-104-160
10398
INDUSTRIAL PARK SUB AREA
13.2 KV DIST AND TIES
Close T1-107-541 on ROW
and
Open 54112 at Cross Road

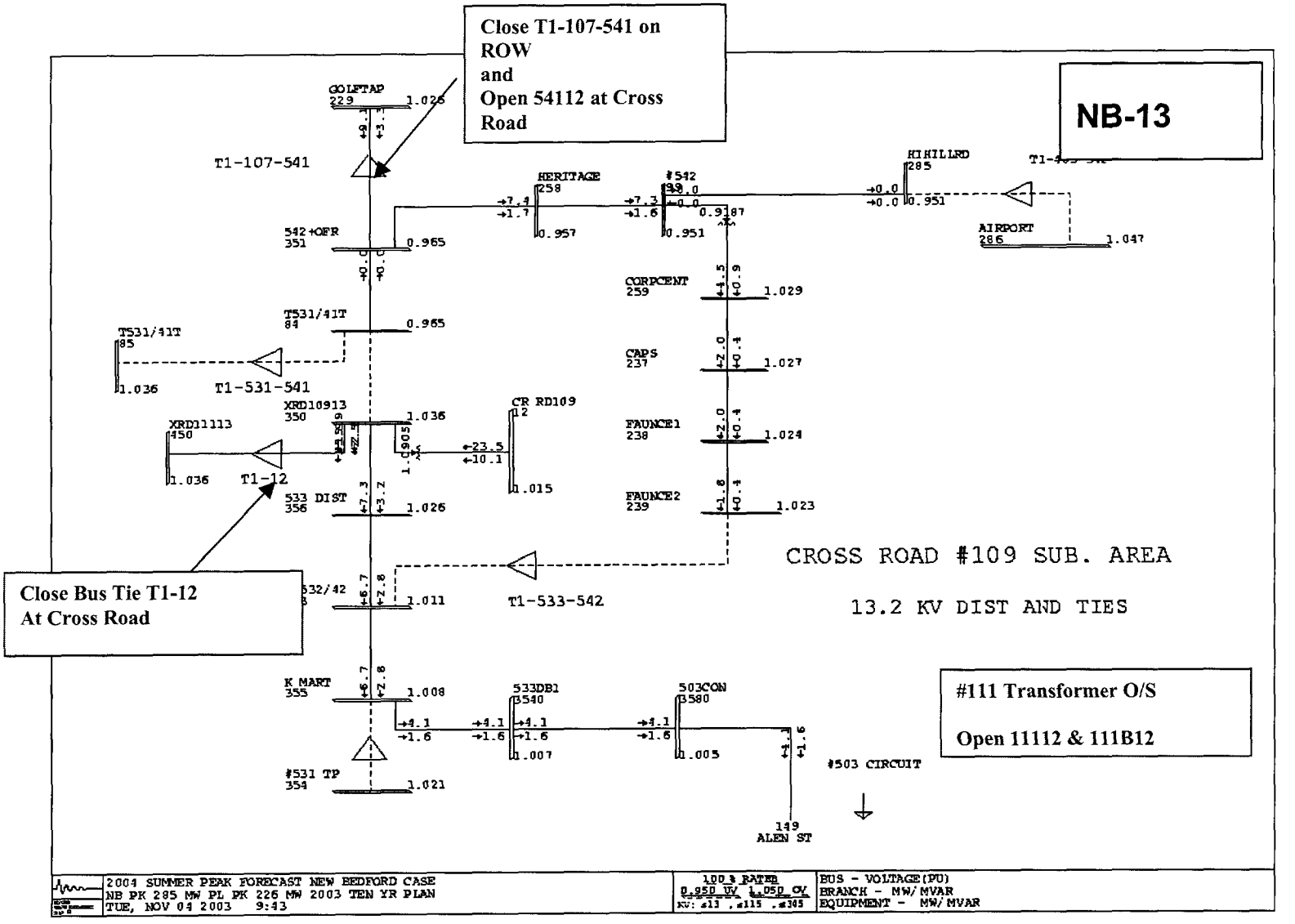
Close T1-107-541 on ROW and Open 54112 at Cross Road
NB-13
GOLFTAP 229 1.026
T1-107-541
HERITAGE 258
#542
HIHILLRD 285
AIRPORT 286 1.047
542+OFR 351 0.965
CORPCENT 259 1.029
T531/41T 84 0.965
T531/41T 85 1.036
T1-531-541
CAPS 237 1.027
XRD10913 350 1.036
CR RD109 12
XRD11113 450 1.036
T1-12
FAUNCE1 238 1.024
533 DIST 356 1.026
FAUNCE2 239 1.023
CROSS ROAD #109 SUB. AREA
13.2 KV DIST AND TIES
Close Bus Tie T1-12 At Cross Road
T1-533-542
K MART 355 1.008
533DB1 3540
503CON 3580
#111 Transformer O/S
Open 11112 & 111B12
#531 TP 354 1.021
#503 CIRCUIT
149 ALEN ST
2004 SUMMER PEAK FORECAST NEW BEDFORD CASE
NB PK 285 MW PL PK 226 MW 2003 TEN YR PLAN
TUE, NOV 04 2003 9:43
100% RATED
BUS - VOLTAGE(PU)
BRANCH - MW/MVAR
EQUIPMENT - MW/MVAR

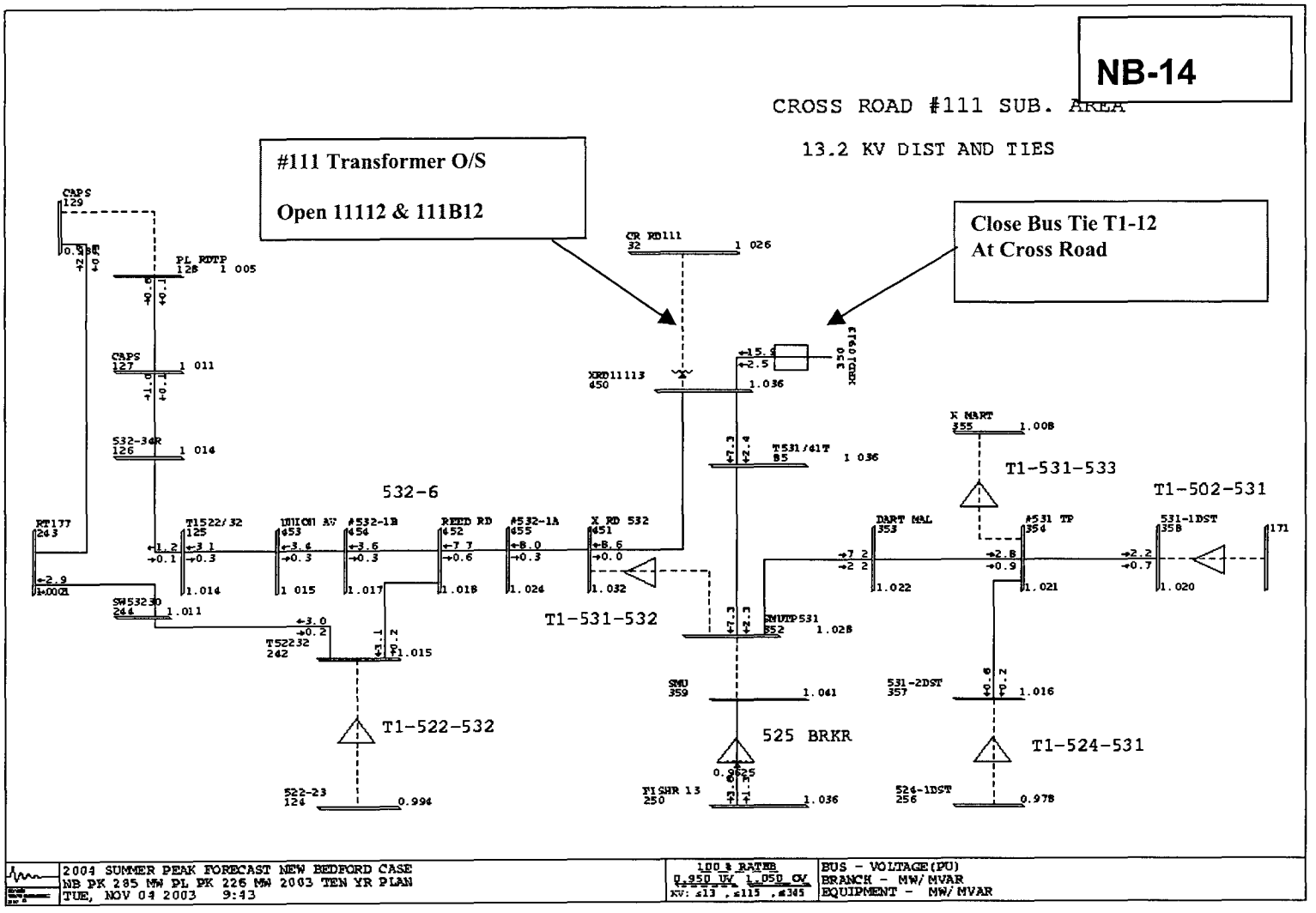
NB-14
CROSS ROAD #111 SUB. AREA
13.2 KV DIST AND TIES
#111 Transformer O/S
Open 11112 & 111B12
Close Bus Tie T1-12
At Cross Road
532-6
T1-531-532
T1-522-532
T1-531-533
T1-502-531
T1-524-531
525 BRKR
2004 SUMMER PEAK FORECAST NEW BEDFORD CASE
NB PK 285 MW PL PK 226 MW 2003 TEN YR PLAN
TUE, NOV 04 2003 9:43
100% RATEB
0.950 UV 1.050 OV
BUS - VOLTAGE(PU)
BRANCH - MW/MVAR
EQUIPMENT - MW/MVAR

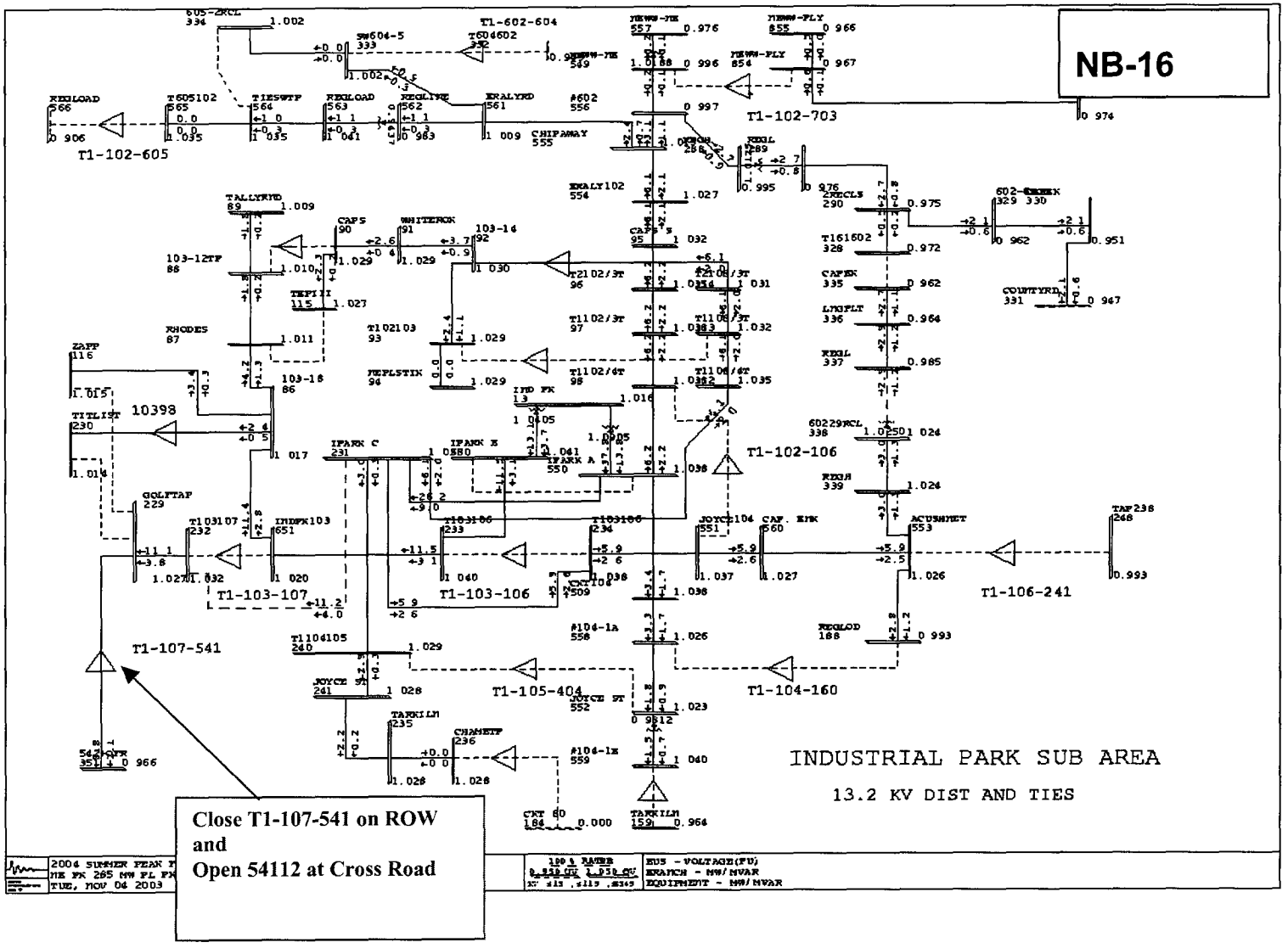
NB-16
T1-102-605
T1-602-604
T1-102-703
T1-102-106
T1-103-107
T1-103-106
T1-106-241
T1-107-541
T1-105-404
T1-104-160
10398
INDUSTRIAL PARK SUB AREA
13.2 KV DIST AND TIES
Close T1-107-541 on ROW
and
Open 54112 at Cross Road

2003 5/10 Year Plan - Year 2004 DSS Line Load Transfers - New Bedford District

BULK SUBSTATION DSS LINE SINGLE-CONTINGENCY ANALYSIS

* Coincident Feeder peaks at Forecasted Summer 2004 District Peaks
* Switching Sequences and Effects of Load Transfer Under Coincident Peak Conditions

CIRCUIT NUMBER	COINCIDENT PEAK LOAD (MW)	(MX)	(MVA)	NUMBER CUSTOMERS	BACKUP CIRCUIT	BACKUP STATION	SWITCHING ACTIONS	BACKUP CIRCUIT LOAD (BEFORE TRANSFER) (MW)	(MX)	(MVA)	(AFTER TRANSFER) (MW)	(MX)	(MVA)	BACKUP CIRCUIT SCADA LIMITS NORMAL (MVA)	LTE (MVA)	STE (MVA)	TRIP (MVA)	PROBLEM AREAS
Cross Road Substation																		
531	7.3	2.4	7.7	643		525 Fisher Rd	CLOSE T1-525-531	3.5	1.1	3.7	10.9	3.6	11.5	10.0	10.0	10.0	13.0	Fisher Rd Transformer Loaded to
							OPEN 53112											9% > 26 MVA LTE RATING
		OR				525 Fisher Rd	Close T1-525-531	3.5	1.1	3.7	10.9	3.6	11.5	10.0	10.0	10.0	13.0	525 Ckt Flow > SCADA LTE
							OPEN 53112 BKR											
		AND																
		523 - >				532 Cross Rd 111	CLOSE T1-532-523	7.3	2.4	7.7	10.7	1.6	10.8	12.0	12.3	13.0	13.7	
							OPEN 52372 BKR											
532	8.6	0.0	8.6	2603		531 Cross Rd 111	CLOSE T1-531-532	7.3	2.4	7.7	16.0	2.9	16.3	18.6	19.7	20.7	22.0	
							OPEN 53212											
533	7.3	3.2	8.0	3239		531 CrossRd 111	CLOSE T1-531-533	7.3	2.4	7.7	10.4	4.1	11.2	18.6	19.7	20.7	22.0	Cross Road #111 Transformer 99%
						506 (70) Pine Street	Open 53312	4.5	0.2	4.5	5.5	0.7	5.5	8.0	8.8	9.2	13.7	of 20 MVA limit for temporary connection
						501 (72) Pine Street	Open 50319	4.3	0.5	4.3	7.7	1.7	7.9	8.0	8.8	9.2	13.7	
							Close T1-503-506											
							Open 50251											
							Close T1-501-502											
541	8.9	2.7	9.3	1246		107 Indpark 111	CLOSE T1-107-541	4.4	0.9	4.5	11.2	4.0	11.9	12.0	12.0	12.7	33.0	
							OPEN 54112											

2004 T&D OPERATING STUDY
New Bedford District

CRYSTAL SPRING SUBSTATION #646

Crystal Spring Substation #646 serves a power supply area consisting of portions of the Towns of Mattapoisett and Marion. During the summer of 2003, peak station load coincident with New Bedford District on 8/22/03 13:00 hours was 12.5 MVA.

Crystal Spring Substation #646 consists of one 115/13.2 kV transformer:

#114: General Electric 12/16/20 MVA 115/13.2 kV

Overload Ratings:

Transformer	Nameplate	Summer Normal Rating No Loss of Life	Summer 12 Hour LTE Rating 1% Loss of Life
#114	12/16/20 MVA	23 MVA	25 MVA

Station Capabilities:

Total Station Capacity (N-0) Normal Ratings	Station Firm Capacity (N-1) LTE Ratings	Load Transfers (MVA)	Total LCC (LTE + Transfers)
23 MVA	0 MVA	21.0 MVA	21.0 MVA

Station Load Forecast:

2004	2005	2006	2007	2008
13.3 MW	13.4 MW	13.5 MW	13.6 MW	13.6 MW

Switching Actions:

Loss of #114 General Electric Transformer

Open: Circuit Switcher 11462 at Crystal Spring
Main Circuit Breaker 114B62 at Crystal Spring

Close: Tie Switch T1-221-301 on R.O.W.

Results:

The #221 circuit out of Arsene Street Substation #654 is used to pick up the entire Crystal Spring substation load by backfeeding through the Crystal Spring 13.2kV bus. Under the tied condition, the #221 circuit load is 19.6 MVA. Cable rating on the #221 circuit getaway is 900 Amperes (20.6 MVA). Refer to **Diagrams NB-17 and NB-18.**

Total Transfer: 21.0 MVA

Distribution Feeder Switching:

For a contingency outage of the Crystal Spring transformer, the transformer at the adjacent Arsene Street #654 substation carries the full station load of 13.5 MVA.

The transfers and switching operations for each distribution supply feeder are shown on the attached table.

Summary of Concerns: Crystal Spring Substation #646

Station:

Based on load projections, Crystal Spring Substation #646 has adequate firm capability via 13.2kV load transfers to other stations through load forecast year 2013 for a contingency outage of the single-ended transformer bank. During the tied condition, voltages in the Marion area on the #302 and #305 circuits may be lower than the 0.95 per unit ANSI "A" range minimum, necessitating additional reactive support on the #302 circuit.

Transmission:

From a station capacity perspective, contingency outages of the #114 115kV line (the Crystal Spring lateral) is not problematic at Crystal Spring Substation #646. Post contingency, outage of the line has identical performance to loss of the transformer.

DSS/Distribution:

Crystal Spring Substation #646 serves two (2) 13.2kV DSS lines, #301 and #302. Contingency backup of the #302 feeder can be problematic from a thermal performance standpoint:

1. The Crystal Spring #302 feeder, assuming no backup is available from the #301 circuit via the #T1-301-302 tie switch on the right-of-way, must then be backed up from Rochester Substation #745. The backup circuit is the #702 circuit served by the Rochester #114 transformer bank, which is a 5/6 MVA transformer with a 6 MVA LTE rating. Since the smaller Rochester #114 transformer bank cannot carry the combined load of both the #702 circuit and the #301 circuit, this transformer would have to be switched out of service and all load carried by the Rochester #112 transformer, which is a 10/12 MVA unit with a 16 MVA LTE rating.

   Post contingency, with the Crystal Spring #302 circuit backed up from the Rochester #114 bank with the #112 bank switched out of service to prevent overloading the unit, the Rochester #112 bank will carry 12.2 MVA, exceeding the 11 MVA SCAA trip setting for the #114 transformer 11% (although the transformer LTE rating of 16 MVA is not violated).

   Alternatively, under this backup condition where the Crystal Spring #302 circuit must be backed up from Rochester at Summer peak, the Rochester #112 and #114 transformers may be operated in parallel for the short period of time that the #302 circuit must be backed up in this condition. Under this scenario, the load share between the two Rochester banks would be

6 MVA fed by the #112 bank (100% of LTE rating), and 10 MVA fed by the #114 bank (less than the 11 MVA SCADA trip and 16 MVA LTE rating).

13.2 kV Feeder	Backup Circuit	Summer LTE Rating in MVA	Projected % of LTE 2004	Projected % of LTE 2008
Crystal Spring #302	**Rochester #702:**	10.0 (circuit) 6.0 (transformer)		
	(fed from #112 bank)		203% **	275% **
	(fed from #114 bank)		111% *	150% **
	(fed from both banks in parallel)		100% ^	102 % ^

** both LTE rating and SCADA trip exceeded
* only SCADA trip exceeded, LTE not violated
^ 6 MVA LTE rating of #112 transformer exceeded

4kV Substation and Distribution:

There are no 4kV substations or circuits served by Crystal Spring Substation #646.

Proposed Integrated Plan:

The suggested actions table listed below will address all of the capacity concerns in the Crystal Spring Substation #646 power supply area.

The contingency backup of the Crystal Spring #302 DSS line from Rochester Substation is problematic due to LTE ratings of transformers and SCADA alarm and trip settings being exceeded. If the #302 circuit must be backed up in this manner at Summer peak conditions (and backing up via T1-301-302 is not possible), the two transformers at Rochester must be paralleled to share the load. Leaving the system in this configuration for a long period of time would not be recommended.

NSTAR has a spare 10/12 MVA 115/13.2kV substation transformer that is stored at the New Bedford District service center. This unit is stored as a spare solely for the Rochester Substation, which has the smallest (lowest-rated) transformers in the NSTAR System. A remedial project to address the #302 circuit backup issue would be to replace the smaller 5/6 MVA transformer with the spare 10/12 MVA unit.

Recommended course of action for Crystal Spring Substation #646

Action	Year needed	Estimated Cost
⇒ Replace 5/6 MVA transformer at Rochester with 10/12 MVA spare unit	2005	$TDB

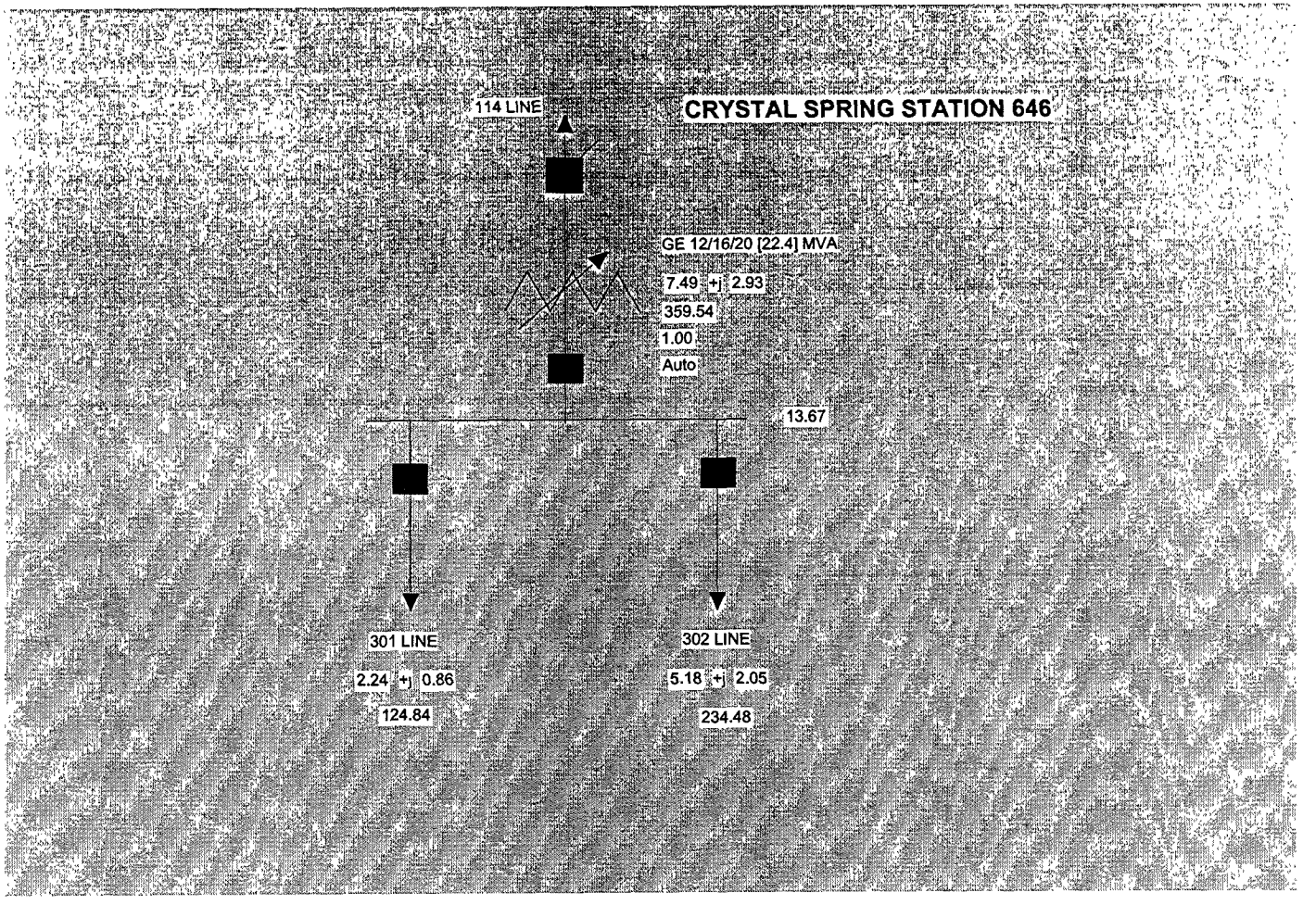
CRYSTAL SPRING STATION 646
114 LINE
GE 12/16/20 [22.4] MVA
7.49 +j 2.93
359.54
1.00
Auto
13.67
301 LINE
2.24 +j 0.86
124.84
302 LINE
5.18 +j 2.05
234.48

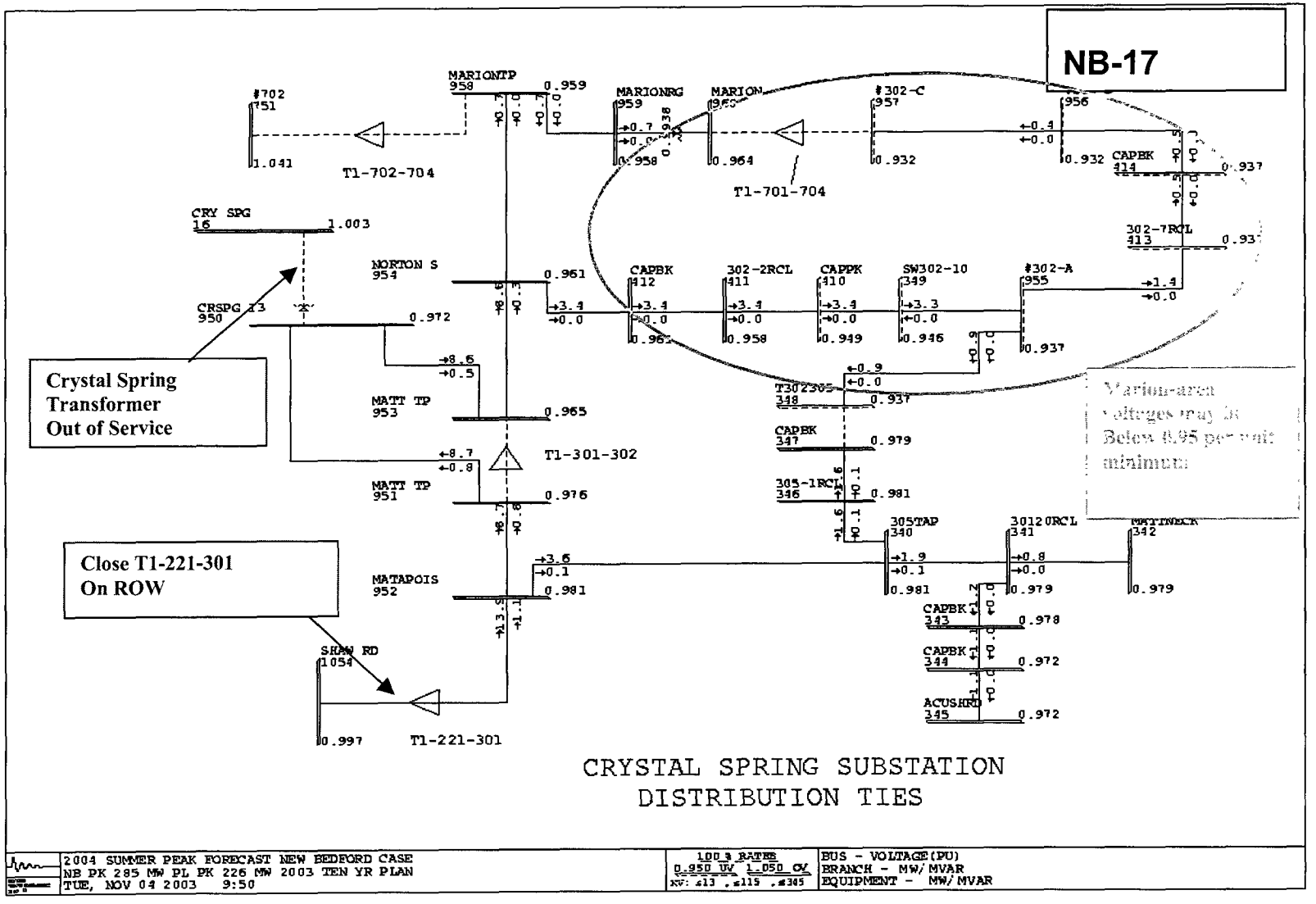
NB-17
Crystal Spring Transformer Out of Service
Close T1-221-301 On ROW
Marion-area voltages may be Below 0.95 per unit minimum
MARIONTP 958
MARIONRG 959
MARION
#302-C 957
CAPBK 414
302-7RCL 413
CRY SPG 16
NORTON S 954
CRSPG 13 950
CAPBK 412
302-2RCL 411
CAPPK 410
SW302-10 349
#302-A 955
MATT TP 953
MATT TP 951
T1-301-302
T302305 348
CAPBK 347
305-1RCL 346
305TAP 340
30120RCL 341
MATINECK 342
MATAPOIS 952
CAPBK 343
CAPBK 344
ACUSHRD 345
SHAW RD 1054
T1-702-704
T1-701-704
T1-221-301
CRYSTAL SPRING SUBSTATION
DISTRIBUTION TIES
2004 SUMMER PEAK FORECAST NEW BEDFORD CASE
NB PK 285 MW PL PK 226 MW 2003 TEN YR PLAN
TUE, NOV 04 2003 9:50
100 % RATES
0.950 UV 1.050 OV
BUS - VOLTAGE(PU)
BRANCH - MW/MVAR
EQUIPMENT - MW/MVAR

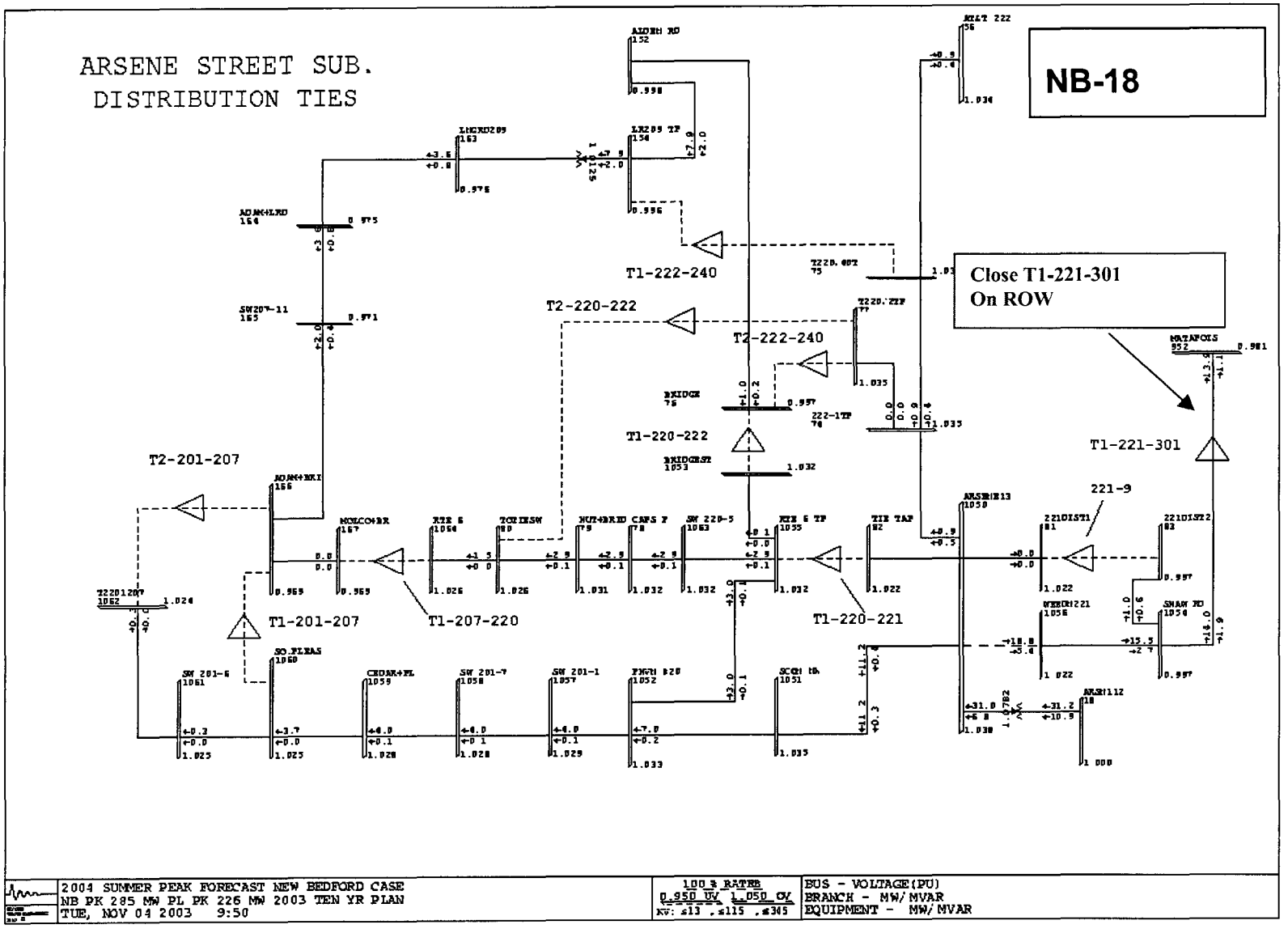
ARSENE STREET SUB.
DISTRIBUTION TIES
NB-18
Close T1-221-301
On ROW
T1-222-240
T2-220-222
T2-222-240
T1-220-222
T2-201-207
T1-201-207
T1-207-220
T1-220-221
T1-221-301
221-9
2004 SUMMER PEAK FORECAST NEW BEDFORD CASE
NB PK 285 MW PL PK 226 MW 2003 TEN YR PLAN
TUE, NOV 04 2003 9:50
100 % RATER
0.950 UV 1.050 OV
BUS - VOLTAGE(PU)
BRANCH - MW/MVAR
EQUIPMENT - MW/MVAR

2003 5/10 Year Plan - Year 2004 DSS Line Load Transfers - New Bedford District

BULK SUBSTATION DSS LINE SINGLE-CONTINGENCY ANALYSIS

* Coincident Feeder peaks at Forecasted Summer 2004 District Peaks
* Switching Sequences and Effects of Load Transfer Under Coincident Peak Conditions

CIRCUIT NUMBER	COINCIDENT PEAK LOAD (MW)	(MX)	(MVA)	NUMBER CUSTOMERS	BACKUP CIRCUIT	BACKUP STATION	SWITCHING ACTIONS	BACKUP CIRCUIT LOAD (BEFORE TRANSFER) (MW)	(MX)	(MVA)	BACKUP CIRCUIT LOAD (AFTER TRANSFER) (MW)	(MX)	(MVA)	BACKUP CIRCUIT SCADA LIMITS NORMAL (MVA)	LTE (MVA)	STE (MVA)	TRIP (MVA)	PROBLEM AREAS
Crystal Spring Substation																		
301	5.2	0.2	5.2	2271		221 Arsene St.	CLOSE T1-221-301	4.6	2.5	5.2	9.8	2.9	10.2	17.0	18.0	19.0	27.0	
							OPEN 301G2											Note: Rochester #114 Bank Cannot carry Crystal Spring #302 and Rochester #702 loads. Switched to #112 Bank SCADA LTE AND TRIP EXCEEDED Rochester #112 Transformer 41% > 12 MVA LTE Rating
302	8.6	0.4	8.6	2468		702 Rochester 112	CLOSE T1-702-704	2.2	0.3	2.2	11.7	3.5	12.2	9.0	10.0	10.0	11.0	
							CLOSE T-52											
							OPEN 302G2											
							OPEN 114B52											
	SAME AS ABOVE, WITH PARALLELED BANKS AT ROCHESTER					Rochester 112	IN PARALLEL				5.4	2.6	6.0	5.0	6.0	6.0	14.0	
						Rochester 114					10.0	0.6	10.0	10.0	15.0	16.0	18.0	

2004 T&D OPERATING STUDY
New Bedford District

FISHER ROAD SUBSTATION #657

Fisher Road Substation #657 serves a power supply area consisting of the all or portions of the Towns Dartmouth and Westport. During the summer of 2003, peak station load coincident with New Bedford District on 8/22/03 13:00 hours was 16.8 MVA.

Fisher Road Substation #657 consists of two 115/13.2 kV transformers, both of which are served by the #109 115kV transmission line:

#1: RTE/ASEA 12/16/20 [22.4] MVA 115/13.2 kV
#2: Wagner 10/12.5 MVA 115/13.2 kV

Overload Ratings:

Transformer	Nameplate	Summer Normal Rating No Loss of Life	Summer 12 Hour LTE Rating 1% Loss of Life
#1	12/16/20 [22.4]	23.0 MVA	26.0 MVA
#2	10/12.5	15.1 MVA	15.1 MVA

Station Capabilities:

Total Station Capacity (N-0) Normal Ratings	Station Firm Capacity (N-1) LTE Ratings	Load Transfers (MVA)	Total LCC (LTE + Transfers)
23.0 MVA *	15.1 MVA	5.4 MVA &	20.5 MVA

*N-0 capacity is rating of 12/16/20 MVA transformer only. Both transformers at the station cannot be used simultaneously with current station switching arrangement.

& Load Transfer value ignores 20 MVA limitation at Cross Road. The effective value is zero if Cross Road #111 20 MVA limitation is taken into account.

Station Load Forecast:

2004	2005	2006	2007	2008
14.9 MW	15.1 MW	15.1 MW	15.2 MW	15.3 MW

Switching Actions:

Loss of RTE/ASEA 12/16/20 MVA Transformer

Open: Circuit Switcher 10982 at Fisher Road
Main Circuit Breaker 109B82 at Fisher Road
Feeder Breaker #52572 at Fisher Road
Feeder Breaker #52272 at Fisher Road

Close: Main Circuit Breaker 109B72 at Fisher Road
Tie Switch #T1-525-531 on ROW between Fisher Rd. and Cross Rd.
Tie Switch #T1-522-532 on Reed Road

Loss of Wagner 10/12 MVA Transformer

Note: Transformer runs normally-energized, but with the 13.2kV secondary breaker open. No loss of load for transformer outage.

Open: Circuit Switcher 10972 at Fisher Road

Close: No other actions required

Results:

For loss of the 12/16/20 MVA RTE/ASEA transformer, post-contingency and post-switching, the Cross Road #111 transformer will be loaded to 23 MVA, exceeding its 20 MVA rating limitation by 13%. The Cross Road #111 transformer was installed in a "temporary" configuration to replace a 12/16/20 MVA unit, which failed during the Summer of 2002. The temporary configuration involved secondary connections from the transformer 13.2kV bushings to the low voltage bus at Fisher Road, which were run in ducts across the ground. Since only one (1) set of secondary connections were run, for a transformer designed for bifurcated secondary connections to an underground cable system, the single set of secondary conductors which were installed are only good for 20 MVA maximum.

The Wagner 10/12 MVA transformer at Fisher Road will be loaded to 10.9 MVA. The 13.2kV distribution switching required to transfer load from Fisher Road Substation #657 to Cross Road Substation #651 avoids overloads on the Wagner 10/12 MVA bank, which has an LTE rating of 15.1 MVA. The required switching does not avoid the 20 MVA rating limitation on the Cross Road #111 transformer bank.

Total Transfer: 5.4 MVA (ignoring 20 MVA limitation at Cross Road.)

Distribution Feeder Switching:

The transfers and switching operations for each distribution supply feeder are shown on the attached table.

Summary of Concerns: Fisher Road Substation #657

Station:

Based on load projections, Fisher Road Substation #657 has inadequate firm capability through load forecast year 2013 for a contingency outage of the 12/16/20 MVA RTE/ASEA transformer bank. Please reference power flow diagrams **NB-19** through **NB-21**.

For loss of the 12/16/20 MVA transformer bank at both current and forecasted Summer peak load levels, the Cross Road #111 transformer will exceed the 20 MVA limitation posed by its "temporary" secondary connection by 13% in Summer 2004. The secondary connections of the #111 transformer, including the 4/0 copper bus conductor on the Cross Road 13.2kV bus, would have to be upgraded to

permit rating these connections at the full transformer LTE rating to prevent this overload.

Transmission:

Fisher Road Substation #657 is served by one (1) 115kV radial transmission line from High Hill Switching Station #644. Due to the fact this is the only 115kV transmission line into Fisher Road Substation, and furthermore due to an inadequate switching arrangement on the 115kV side of Cross Road Substation #651, an outage of the #109 115kV line causes a "forced" outage of both transformer banks at Fisher Road (due to loss of 115kV supply), and causes a "forced" outage of the #109 transformer bank at Cross Road, because the outaged transformer bank cannot be switched over the unaffected #111 115kV line.

In this circumstance, at Summer 2004 peak conditions, area load in excess of the 20 MVA limitation posed by the Cross Road #111 transformer bank must be shed until the #109 115kV line can be restored to at least Cross Road substation. The amount of load at risk would be approximately 27.6 MVA at 2004 forecasted Summer peak load levels. This is further covered under the #109 115kV line outage, discussed in *345/115kV Bulk Transmission Facility Outages*.

DSS/Distribution:

Of the four (4) 13.2kV DSS lines served out of Fisher Road Substation, contingency backup of one (1) has limitations from a system reliability standpoint:

1. Contingency backup of one Fisher Road #524 circuit shows voltage violations when backed up by the Cross Road #531 circuit and the Pine Street #70 and #72 DSS lines (via the Hawthorne #506 and Rockdale #501 circuits). The entire circuit cannot be backed up from the Cross Road #531 circuit due to the capacity limitation on the Cross Road #111 transformer. The #524 circuit is a very extensive circuit length-wise, and heads East from the Substation to serve the S. Dartmouth, Nonquitt, and Padanaram areas.

   Post-contingency and post-switching, primary distribution voltages as low as 0.87 per unit may be observed. Additional reactive support in the form of switched 1.8 MVAR capacitor banks may be required, at an approximate cost of $20k per installation.

13.2 kV Feeder	Backup Circuit	Summer LTE Rating in MVA	Projected % of LTE 2004	Projected % of LTE 2008
Fisher Road #524	Cross Road #531 Pine Street #70 Pine Street #72	19.7 8.8 8.8	Low Voltages 0.87 per unit	Low Voltages 0.87 per unit Cross Road #111 Transformer 110% of 20 MVA limit

4kV Substation and Distribution:

Fisher Road Substation #657 does not feed any 4kV distribution substations or circuits. Some limited 4kV stepdown areas exist in Seacoast areas.

Proposed Integrated Plan:

The suggested actions table listed below will address all of the capacity concerns in the Fisher Road Substation #657 power supply area.

As described under Cross Road Substation #651, design a more permanent interconnection for the Cross Road #111 transformer, with a transformer pad, and secondary connections rated at least for the full 44.8 MVA top nameplate rating of the transformer. This may also require upgrade of the 4/0 copper 13.2kV wire bus at Fisher Road, at a total estimated cost of $260k. This would address post-contingency overload of the #111 transformer for loss of the Fisher Road 12/16/20 MVA transformer, and post-contingency overload of the transformer when backing up the #524 circuit.

Install a 13.2kV bus tie circuit breaker at Fisher Road Substation #657. This would permit both transformers at that station to carry load normally. With the current arrangement at Fisher Road, a 13.2kV bus outage must be taken to allow both transformers to be switched into service, as the bus tie currently consists of non-load-break disconnect switches, which must be operated with the bus de-energized. Estimated cost is $150k.

As discussed under the #109 115kV line outage under the *345/115kV Bulk Transmission Facility Outages* section, install two (2) 115kV SCADA-controlled motor-operated switches where the #109 and #111 115kV lines enter Cross Road Substation. This would permit either Cross Road transformer to be fed from either 115kV line, and would prevent forced outage of three transformer banks (two at Fisher Road and one at Cross Road) for an outage of the #109 115kV line. Estimated cost is $204k.

Recommended course of action for Fisher Road Substation #657

Action	Year needed	Estimated Cost
⇒ Increase rating for connection of Cross Road #111 Transformer	2004	$260K
⇒ Install 13.2kV bus tie breaker at Fisher Road Substation #657	2004	$150K
⇒ Install 115kV SCADA-controlled switches #109/111 lines at Cross Road Sub.	2004	$204K
⇒ Install additional 1.8 MVAR switched capacitor banks on #524 circuit	2004	$20k

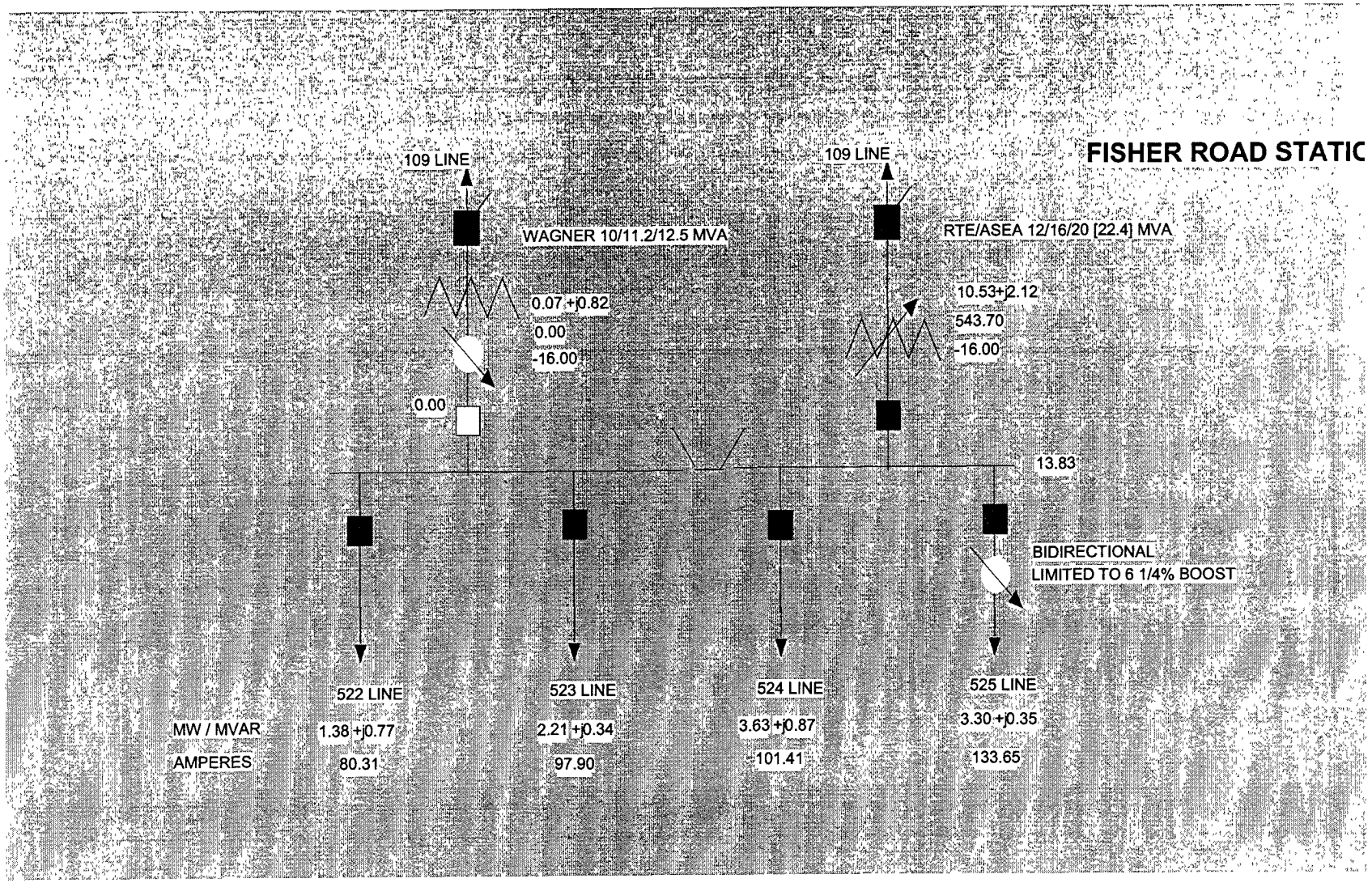
FISHER ROAD STATIC
109 LINE
WAGNER 10/11.2/12.5 MVA
0.07 +j0.82
0.00
-16.00
0.00
109 LINE
RTE/ASEA 12/16/20 [22.4] MVA
10.53+j2.12
543.70
-16.00
13.83
BIDIRECTIONAL
LIMITED TO 6 1/4% BOOST
522 LINE
523 LINE
524 LINE
525 LINE
MW / MVAR
1.38 +j0.77
2.21 +j0.34
3.63 +j0.87
3.30 +j0.35
AMPERES
80.31
97.90
101.41
133.65

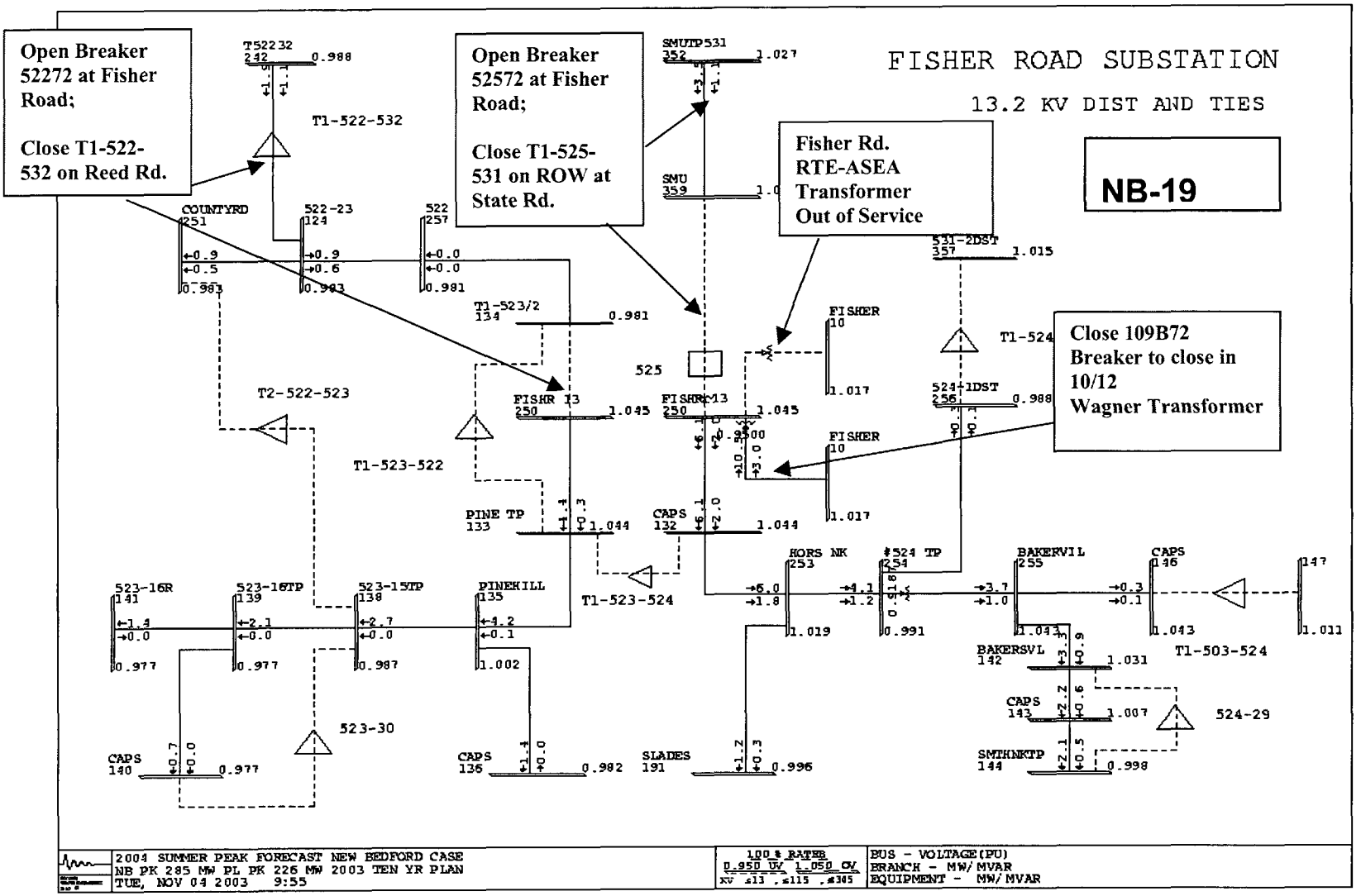
Open Breaker 52272 at Fisher Road;
Close T1-522-532 on Reed Rd.
Open Breaker 52572 at Fisher Road;
Close T1-525-531 on ROW at State Rd.
Fisher Rd. RTE-ASEA Transformer Out of Service
Close 109B72 Breaker to close in 10/12 Wagner Transformer
FISHER ROAD SUBSTATION
13.2 KV DIST AND TIES
NB-19
T1-522-532
T2-522-523
T1-523-522
T1-523-524
T1-524
T1-503-524
523-30
524-29
525
COUNTYRD 251
522-23 124
522 257
T1-523/2 134
FISHR 13 250
PINE TP 133
CAPS 132
FISHER 10
531-2DST 357
524-1DST 256
HORS NK 253
#524 TP 254
BAKERVIL 255
CAPS 146
BAKERSVL 142
CAPS 143
SMTHNKTP 144
523-16R 141
523-16TP 139
523-15TP 138
PINEHILL 135
CAPS 140
CAPS 136
SLADES 191
SMUTP531 352
SMU 359
T52232 242
2004 SUMMER PEAK FORECAST NEW BEDFORD CASE
NB PK 285 MW PL PK 226 MW 2003 TEN YR PLAN
TUE, NOV 04 2003 9:55
100% RATEB
0.950 UV 1.050 OV
BUS - VOLTAGE(PU)
BRANCH - MW/MVAR
EQUIPMENT - MW/MVAR

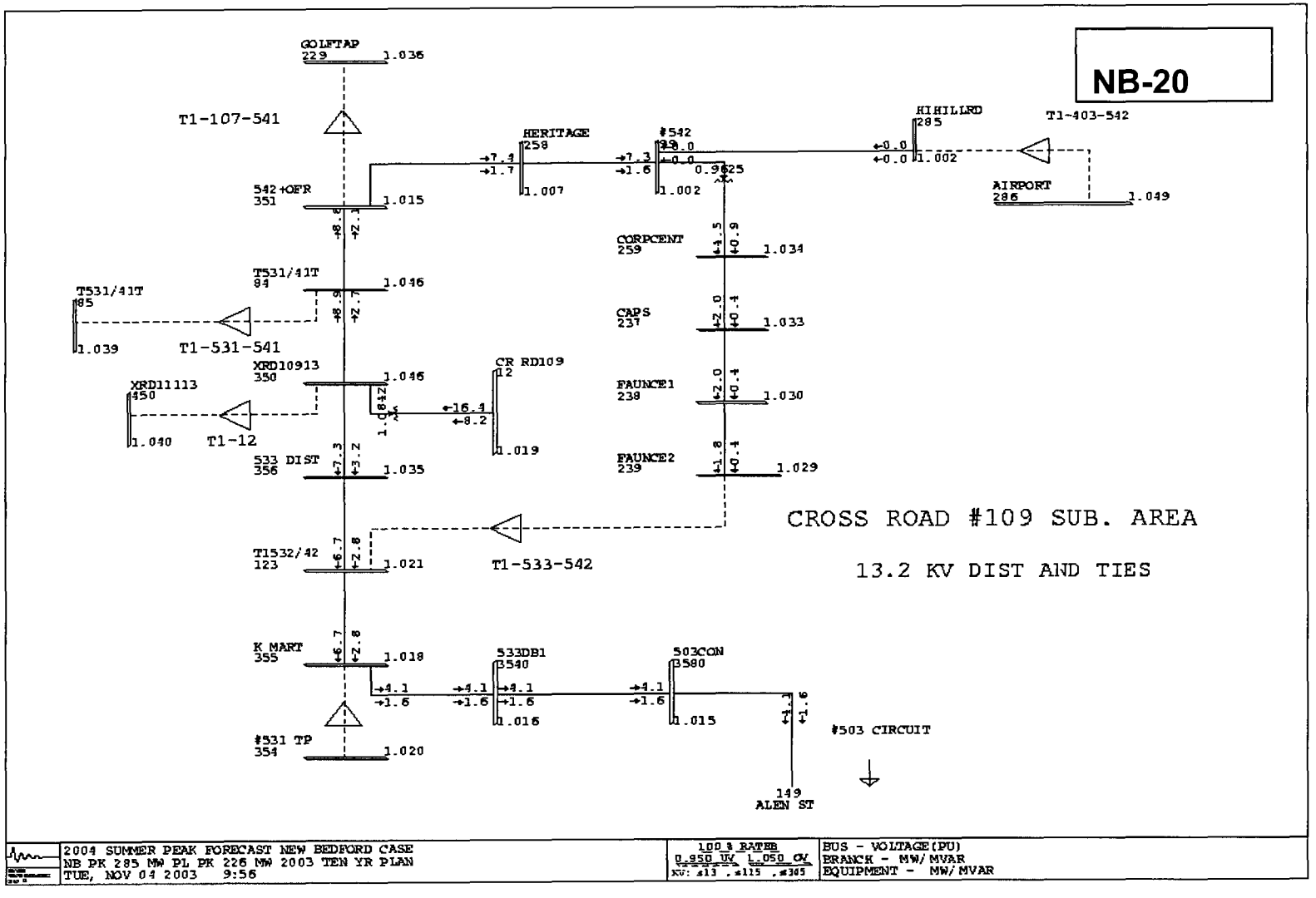
NB-20
GOLFTAP
229
1.036
T1-107-541
HERITAGE
258
1.007
#542
1.002
HIHILLRD
285
1.002
T1-403-542
AIRPORT
286
1.049
542+OFR
351
1.015
CORPCENT
259
1.034
T531/41T
84
1.046
T531/41T
85
1.039
T1-531-541
CAPS
237
1.033
XRD10913
350
1.046
CR RD109
12
1.019
XRD11113
450
1.040
T1-12
FAUNCE1
238
1.030
533 DIST
356
1.035
FAUNCE2
239
1.029
CROSS ROAD #109 SUB. AREA
13.2 KV DIST AND TIES
T1532/42
123
1.021
T1-533-542
K MART
355
1.018
533DB1
3540
1.016
503CON
3580
1.015
#503 CIRCUIT
#531 TP
354
1.020
149
ALEN ST
2004 SUMMER PEAK FORECAST NEW BEDFORD CASE
NB PK 285 MW PL PK 226 MW 2003 TEN YR PLAN
TUE, NOV 04 2003 9:56
100 % RATEB
0.950 UV 1.050 OV
KV: #13 .#115 .#345
BUS - VOLTAGE(PU)
BRANCH - MW/MVAR
EQUIPMENT - MW/MVAR

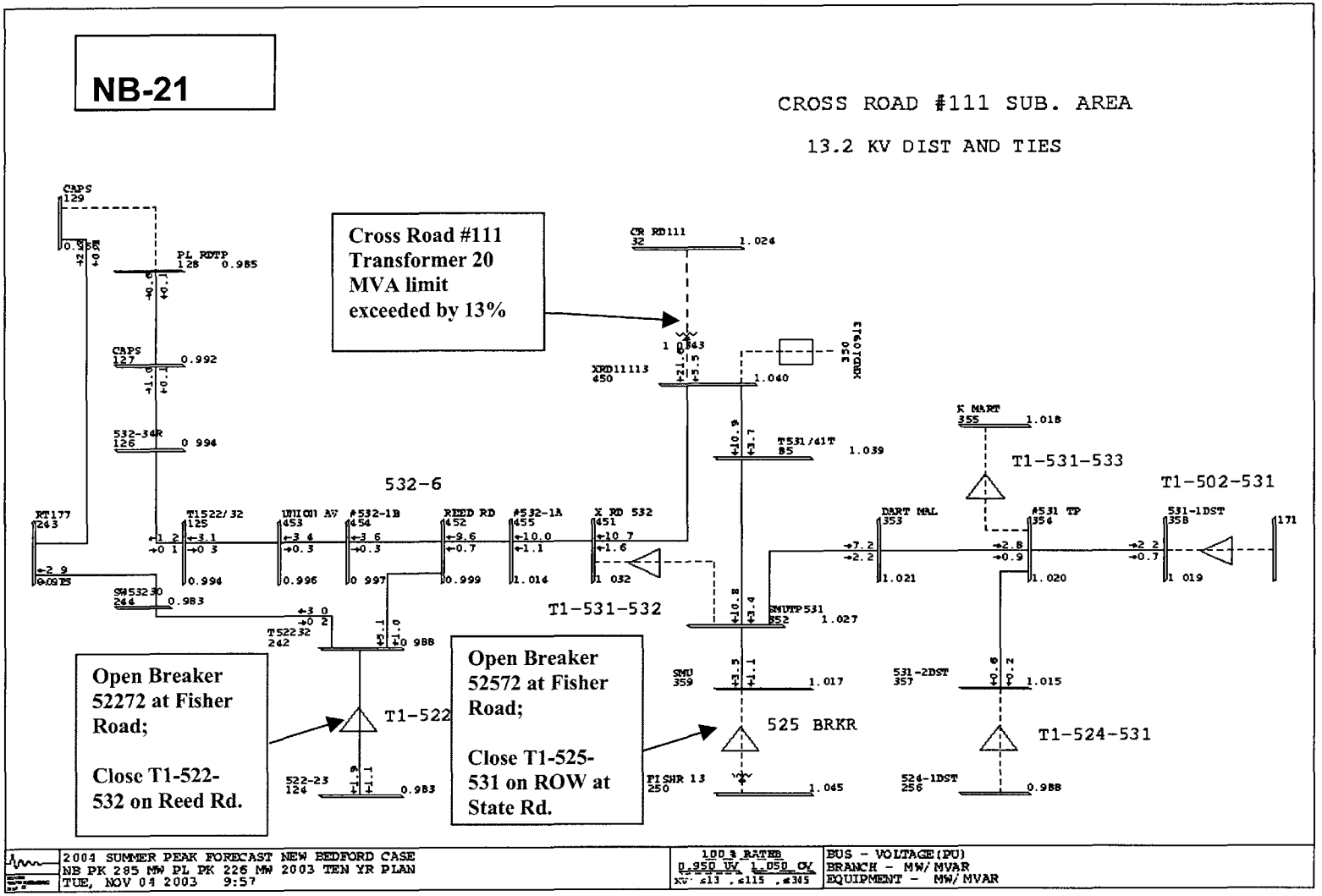
NB-21
CROSS ROAD #111 SUB. AREA
13.2 KV DIST AND TIES
Cross Road #111 Transformer 20 MVA limit exceeded by 13%
Open Breaker 52272 at Fisher Road;
Close T1-522-532 on Reed Rd.
Open Breaker 52572 at Fisher Road;
Close T1-525-531 on ROW at State Rd.
532-6
T1-531-532
T1-531-533
T1-502-531
T1-522
525 BRKR
T1-524-531
2004 SUMMER PEAK FORECAST NEW BEDFORD CASE
NB PK 285 MW PL PK 226 MW 2003 TEN YR PLAN
TUE, NOV 04 2003 9:57
BUS - VOLTAGE(PU)
BRANCH - MW/MVAR
EQUIPMENT - MW/MVAR

2003 5/10 Year Plan - Year 2004 DSS Line Load Transfers - New Bedford District

BULK SUBSTATION DSS LINE SINGLE-CONTINGENCY ANALYSIS

* Coincident Feeder peaks at Forecasted Summer 2004 District Peaks
* Switching Sequences and Effects of Load Transfer Under Coincident Peak Conditions

CIRCUIT NUMBER	COINCIDENT PEAK LOAD (MW)	(MX)	(MVA)	NUMBER CUSTOMERS	BACKUP CIRCUIT	BACKUP STATION	SWITCHING ACTIONS	BACKUP CIRCUIT LOAD (BEFORE TRANSFER) (MW)	(MX)	(MVA)	BACKUP CIRCUIT LOAD (AFTER TRANSFER) (MW)	(MX)	(MVA)	BACKUP CIRCUIT SCADA LIMITS NORMAL (MVA)	LTE (MVA)	STE (MVA)	TRIP (MVA)	PROBLEM AREAS
Fisher Road Substation																		
522	2.0	1.2	2.3	874	532	CrossRd 111	CLOSE T1-522-532 OPEN 52272	8.6	0.0	8.6	10.7	1.6	10.8	12.0	12.3	13.0	13.7	
523	4.4	0.3	4.4	2125	524	Fisher Rd	CLOSE T1-523-524 OPEN 52372	6.1	0.2	6.1	10.4	2.3	10.7	11.0	12.3	13.0	13.0	
523	4.4	0.3	4.4	2125	532 522	CrossRd 111 Fisher Rd	CLOSE T2-522-523 CLOSE T1-522-532 OPEN 522-23 OPEN 52372	8.6 2.0	0.0 1.2	8.6 2.3	14.8 1.0	3.0 0.6	15.1 1.2	12.0 11.0	12.3 12.3	13.0 13.0	13.7 13.0	SCADA LTE and TRIP Exceeded Low Voltages 0.82 per unit 523 Circuit Cross Road #111 Transformer Temporary Connection Limit 20 MVA Exceeded 17%
524	6.1	0.2	6.1	2661	523	Fisher Rd	CLOSE T1-523-524 OPEN 52472	4.4	0.3	4.4	10.3	2.3	10.6	12.0	12.3	13.0	13.0	
524	6.1	0.2	6.1	2661	531 506 (70) 501 (72)	CrossRd 111 Pine Street Pine Street	CLOSE T1-524-531 CLOSE T1-506-524 OPEN 52472 OPEN 524-7 CLOSE T1-501-502 OPEN 524-7	7.3 4.5 4.3	2.4 0.2 0.5	7.7 4.5 4.3	9.5 5.4 7.7	3.3 0.5 1.7	10.1 5.4 7.9	18.6 8.0 8.0	19.7 8.8 8.8	20.7 9.2 9.2	22.0 13.7 13.7	Low Voltages 0.87 per unit 524 Circuit
525	3.5	1.1	3.7	1	531	CrossRd 111	Close T1-531-525 Open 52572	7.3	2.4	7.7	10.9	3.7	11.5	18.6	19.7	20.7	22.0	525 Circuit Regulator to neutral and off

2004 T&D OPERATING STUDY
New Bedford District

INDUSTRIAL PARK SUBSTATION #636

Industrial Park Substation #636 serves a power supply area consisting of the City of New Bedford and portions of the Towns of Freetown, Lakeville, Acushnet, and Rochester. During the summer of 2003, peak station load coincident with New Bedford District on 8/22/03 13:00 hours was 43.5 MVA.

Industrial Park Substation #636 consists of two 115/13.2 kV transformers:

#111: ASEA 30/40/50 [56] MVA 115/13.2 kV
#112: ASEA 30/40/50 [56] MVA 115/13.2 kV

Overload Ratings:

Transformer	Nameplate	Summer Normal Rating No Loss of Life	Summer 12 Hour LTE Rating 1% Loss of Life
#111	30/40/50 [56] MVA	58 MVA	63 MVA
#112	30/40/50 [56] MVA	64 MVA	69 MVA

Station Capabilities:

Total Station Capacity (N-0) Normal Ratings	Station Firm Capacity (N-1) LTE Ratings	Load Transfers (MVA)	Total LCC (LTE + Transfers)
122 MVA	58 MVA	22 MVA	80 MVA

Station Load Forecast:

2004	2005	2006	2007	2008
40.3 MW	40.8 MW	41.4 MW	42.0 MW	42.6 MW

Switching Actions:

Loss of #111 Transformer

Open: Circuit Switcher 11162
Main Circuit Breaker 111A62
Main Circuit Breaker 111C62

Close: A - B Bus Tie Breaker T1-62
Main Circuit Breaker 112C62

Loss of #112 Transformer

Open: Circuit Switcher 11262
Main Circuit Breaker 112B62

Close: A - B Bus Tie Breaker T1-62

Distribution Feeder Switching:

For either transformer outage, remaining transformer carries full station load of 40.3 MW.

While not required for loss of either transformer, transfer of the station's 13.2kV distribution supply lines via manual switches may be conducted for additional load reduction. The transfers and switching operations required are shown on the attached table.

Total Transfer: 22 MVA

Summary of Concerns: Industrial Park Substation #636

Station:

Based on load projections, Industrial Park Substation #636 has adequate firm capability through load forecast year 2013 for a contingency outage of either transformer bank. Please reference power flow diagrams **NB-22** and **NB-23**.

Transmission:

From a station capacity perspective, contingency outages of either the #111 or #112 115kV lines is not problematic at Industrial Park Substation #636. Post contingency, 115kV circuit breaker #WE62 can be closed and the appropriate 115kV disconnect switch (#11166 or #11166) may be opened for loss of either transmission line.

DSS/Distribution:

The Industrial Park #636 Substation serves nine (9) 13.2kV distribution feeder circuits, five (5) of which are feeds to the Greater New Bedford Business Park. Two (2) out of these five are dedicated feeds to Polaroid, off of which no other customers are served, and are excluded from the analysis; the remaining three (3) circuits to the Industrial Park were analyzed. The remaining four (4) circuits serve residential and commercial load in New Bedford, Freetown, Lakeville, and Acushnet.

Five (5) of the analyzed 13.2kV feeder circuits have apparent thermal or voltage concerns:

1. Contingency backup of the Industrial Park #101 circuit requires load transfers to the Industrial Park #103 and #107 circuits. The resulting load of 12.9 MVA on the #103 circuit exceeds the SCADA LTE rating of 12 MVA by 7.5%, but is within the 19 MVA trip setting. The cable getaway on the #103 is 750 kcmil and 600 kmcil conductor, giving a rating of approximately 12 MVA, ignoring the twenty foot section of 600 kcmil conductor.

2. Contingency backup of the Industrial Park #102 circuit requires load transfers to the Industrial Park #104 and #106 circuits. The resulting load of 9.9 MVA on the #106 circuit exceeds the

SCADA LTE rating of 9.8 MVA by 1%, but is within the 33 MVA trip setting. The cable getaway on the #106 circuit is 750 kmcil and 2-500 kcmil Kerite cable; the 750 kcmil section would have a rating of 12 MVA, so this rating is not exceeded.

3. Contingency backup of the Industrial Park #103 circuit requires load transfers to the Industrial Park #101 and #107 circuits. The resulting load of 12.6 MVA on the #101 circuit exceeds the SCADA LTE rating of 12 MVA by 5%, but is within the 19 MVA trip setting. The cable getaway on the #101 circuit is 750 kcmil conductor rated for 12 MVA.

4. Contingency backup of the Industrial Park #106 circuit requires load transfers to the Wing Lane #241 line and the Industrial Park #106 circuit. The Acushnet Avenue #160 circuit would have to be transferred off the #106 circuit and over to the #104 circuit before the transfer of the #106 circuit to the Wing Lane #241 line. Post-contingency and post-transfer, marginal voltages of 0.95 per unit occur on the #106 circuit and the #161 circuit while fed from Wing Lane.

   An alternative plan for backing up the Industrial Park #106 circuit from the Industrial Park #102 circuit would result in a load of 13.1 MVA on the #102 circuit, exceeding the 12 MVA LTE rating for 750 kcmil conductor by 9%

5. Contingency backup of the Industrial Park #107 circuit requires load transfers to the Industrial Park #101 and #103 circuits. The resulting load of 12.5 MVA on the #101 circuit exceeds the 12 MVA LTE rating for 750 kcmil conductor by 4%, but is within the 19 MVA SCADA trip setting.

13.2 kV Feeder	Backup Circuit	Summer LTE Rating in MVA	Projected % of LTE 2004	Projected % of LTE 2008
Industrial Park #101	Industrial Park #103	12.0	108%	115%
	Industrial Park #107	12.0		
Industrial Park #102	Industrial Park #106	9.8	101%	106%
	Industrial Park #104	9.8		
Industrial Park #103	Industrial Park #101	12.0	105%	111%
	Industrial Park #107	12.0		
Industrial Park #106	Wing Lane #241	15.0	Marginal voltages 0.95 pu	Marginal voltages 0.92 pu
	Industrial Park #104	9.8		
Industrial Park #107	Industrial Park #103	12.0	104%	109%
	Industrial Park #101	12.0		

4kV Substation and Distribution:

Industrial Park Substation #636 feeds two (2) 3.74 kV distribution substations: Church Street #684 and Joyce Street #689.

At both of these distribution substations, the 13.2/3.74kV transformers either have or are projected to exceed top nameplate ratings during Summer peak conditions, all-facilities-in. The table below summarizes the capacity of these 13.2/3.74 kV stations.

3.74 kV Transformer	Normal Rating	2004 Projection	2008 Projection
Church Street	2.5 MVA	2.6 MVA	2.9 MVA
Joyce Street	1.5 MVA	1.4 MVA	1.6 MVA

Proposed Integrated Plan:

The suggested actions table listed below will address all of the capacity concerns in the Industrial Park Substation #636 power supply area.

There is a proposed project to construction two (2) new 13.2kV distribution supply feeders into the Greater New Bedford Business Park to relieve loading on the #101, #103, and #107 circuits. These two (2) new feeders, the #153 and #154 circuits, would pick up the Western end of the Industrial Park and remove load from the #103 and #107 circuits, improving their ability to back up each other and the #101 circuit. Additionally, with load removed from the #103 circuit, it can then be used as contingency backup for the #106 circuit, solving the low voltage problem associated with transferring it to Wing Lane. The estimated cost for this project is $175k per circuit for a total of $350k. This project will be pursued for the 2005 budget.

The two (2) transformers at the Church Street #684 and Joyce Street #689 3.74kV distribution substations each serve single radial 3.74kV circuits. The station at Joyce Street is slated for retirement when its 4kV circuit is converted to 13.2kV. The 2.5 MVA transformer at Church Street can benefit from the addition of fans and thermostatic controls to improve cooling on the unit, to obtain an expected 33% capacity increase, at an expected cost of $12 k. Alternatively, assuming the completion of a proposed replacement of both transformers at the Hathaway primary network substation in New Bedford, one of the 3 MVA units at that station could be used to replace the overloaded Church Street unit.

Recommended course of action for Industrial Park Substation #636

Action	Year needed	Estimated Cost
⇒ Install two (2) new 13.2kV DSS lines, Industrial Park, to relieve #101, #103, #107	2005	$350K
⇒ Add fans to Church Street LCU #684	2005	$12K
⇒ Retire Joyce Street LCU #689 and convert to 13.2kV	2008	$ TBD

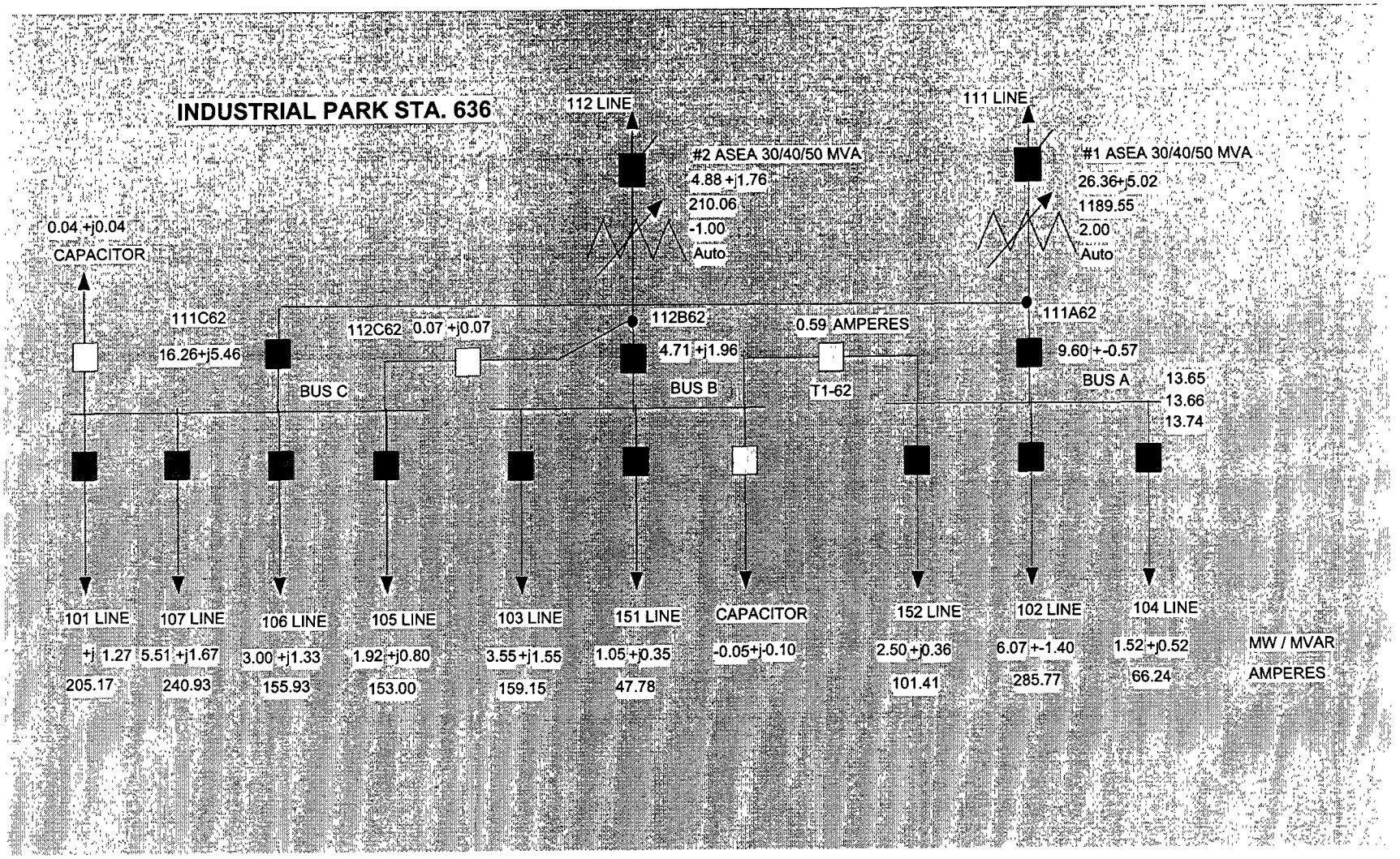
INDUSTRIAL PARK STA. 636
112 LINE
111 LINE
#2 ASEA 30/40/50 MVA
4.88 +j1.76
210.06
-1.00
Auto
#1 ASEA 30/40/50 MVA
26.36+j5.02
1189.55
2.00
Auto
0.04 +j0.04
CAPACITOR
111C62
16.26+j5.46
112C62
0.07 +j0.07
112B62
4.71 +j1.96
0.59 AMPERES
111A62
9.60 +-0.57
BUS C
BUS B
T1-62
BUS A
13.65
13.66
13.74
101 LINE
+j 1.27
205.17
107 LINE
5.51 +j1.67
240.93
106 LINE
3.00 +j1.33
155.93
105 LINE
1.92 +j0.80
153.00
103 LINE
3.55 +j1.55
159.15
151 LINE
1.05 +j0.35
47.78
CAPACITOR
-0.05+j-0.10
152 LINE
2.50 +j0.36
101.41
102 LINE
6.07 +-1.40
285.77
104 LINE
1.52 +j0.52
66.24
MW / MVAR
AMPERES

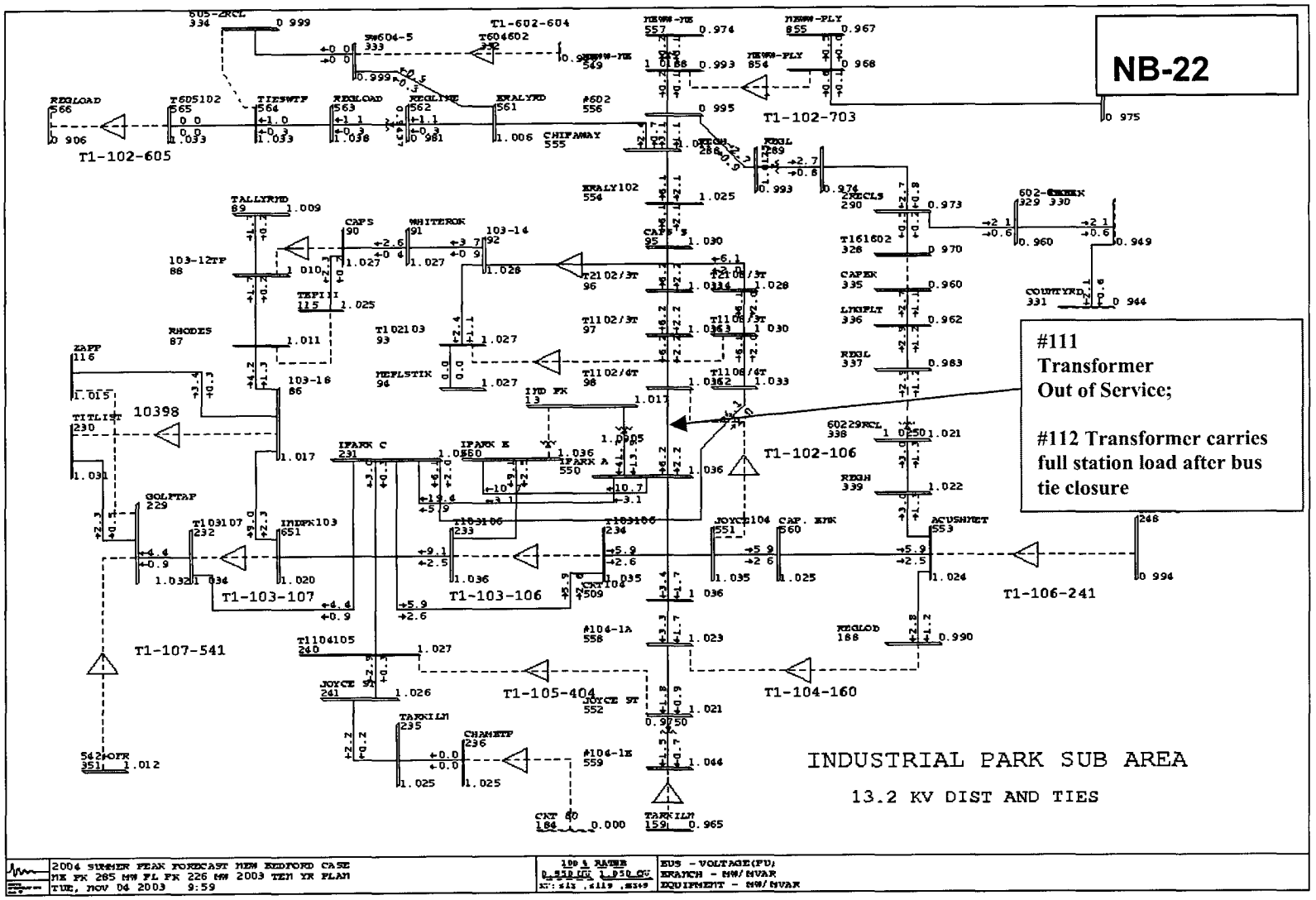
NB-22
#111
Transformer
Out of Service;
#112 Transformer carries
full station load after bus
tie closure
INDUSTRIAL PARK SUB AREA
13.2 KV DIST AND TIES
T1-102-605
T1-102-703
T1-102-106
T1-103-107
T1-103-106
T1-106-241
T1-107-541
T1-105-404
T1-104-160
2004 SUMMER PEAK FORECAST NEW BEDFORD CASE
TUE, NOV 04 2003 9:59

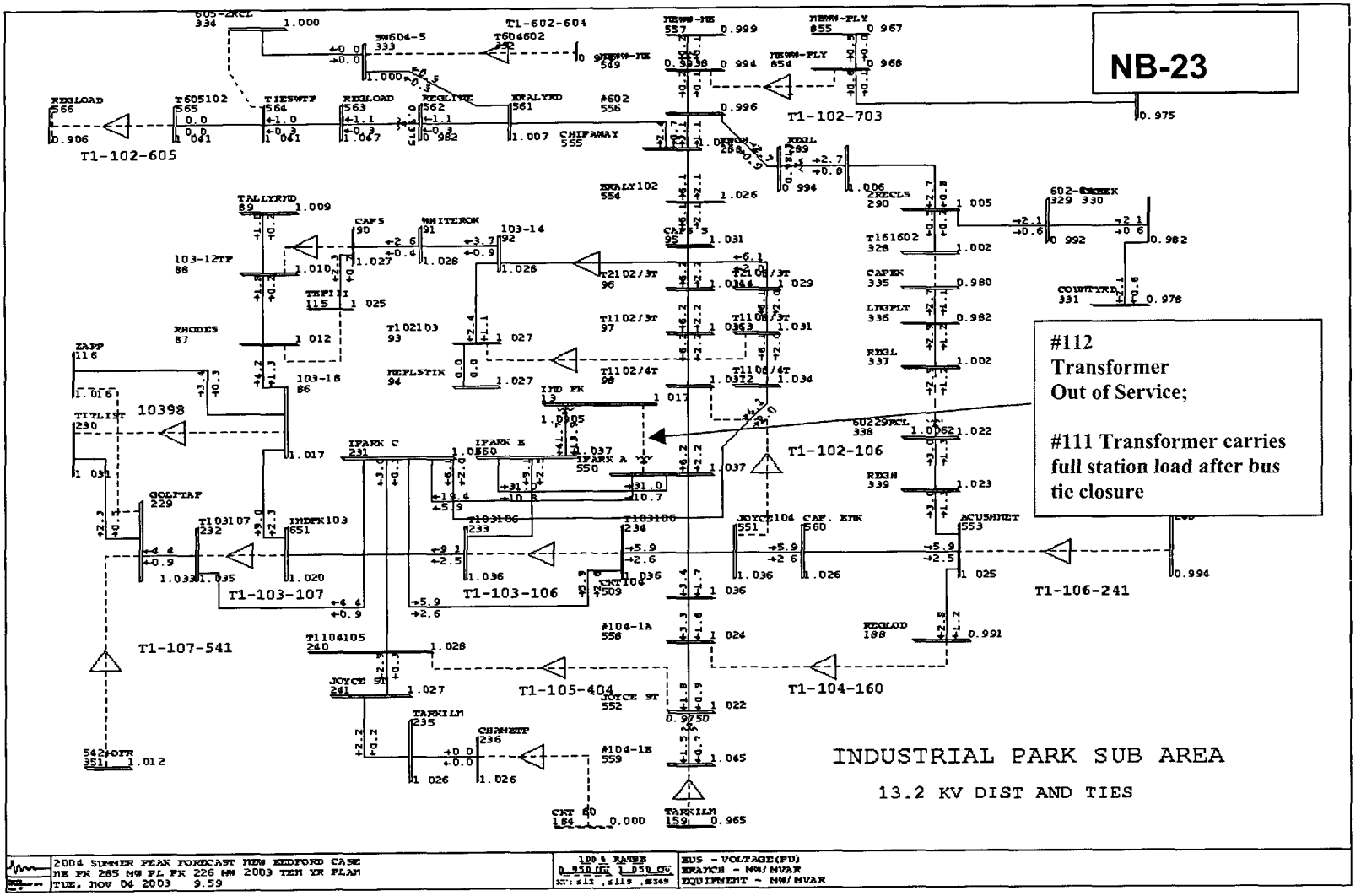
NB-23
#112
Transformer
Out of Service;
#111 Transformer carries
full station load after bus
tic closure
T1-102-605
T1-602-604
T1-102-703
T1-102-106
T1-103-107
T1-103-106
T1-106-241
T1-107-541
T1-105-404
T1-104-160
10398
INDUSTRIAL PARK SUB AREA
13.2 KV DIST AND TIES
2004 SUMMER PEAK FORECAST NEW BEDFORD CASE
NE FK 285 MW PL FK 226 MW 2003 TEN YR PLAN
TUE, NOV 04 2003 9.59
EUS - VOLTAGE(PU)
EQUIPMENT - MW/MVAR

2003 5/10 Year Plan - Year 2004 DSS Line Load Transfers - New Bedford District

BULK SUBSTATION DSS LINE SINGLE-CONTINGENCY ANALYSIS

* Coincident Feeder peaks at Forecasted Summer 2004 District Peaks
* Switching Sequences and Effects of Load Transfer Under Coincident Peak Conditions

CIRCUIT NUMBER	COINCIDENT PEAK LOAD (MW)	(MX)	(MVA)	NUMBER CUSTOMERS	BACKUP CIRCUIT	BACKUP STATION	SWITCHING ACTIONS	BACKUP CIRCUIT LOAD (BEFORE TRANSFER) (MW)	(MX)	(MVA)	BACKUP CIRCUIT LOAD (AFTER TRANSFER) (MW)	(MX)	(MVA)	BACKUP CIRCUIT SCADA LIMITS NORMAL (MVA)	LTE (MVA)	STE (MVA)	TRIP (MVA)	PROBLEM AREAS
Industrial Park Substation																		
101	5.6	1	5.7	New Circuit		103 Indpark 112	CLOSE T1-101-103	9.1	2.5	9.4	12.1	4.6	12.9	12.0	12.0	13.0	19.0	SCADA LTE LIMIT EXCEEDED
						107 Indpark 111	OPEN 10162	4.4	0.9	4.5	7.8	1.3	7.9	12.0	12.0	12.7	33.0	
							CLOSE 10788											
							OPEN 10388 (ZAPP)											
102	5.9	1.0	6.0	2778		106 Indpark 111	CLOSE T1-102-106	5.9	2.6	6.4	9.2	3.6	9.9	9.8	9.8	10.3	33.0	SCADA LTE LIMIT EXCEEDED
						104 Indpark 111	CLOSE T1-104-160	3.4	1.7	3.8	6.3	3.0	7.0	9.8	9.8	10.3	16.4	
							OPEN 10262											
							OPEN 160-1 Recloser											
103	8.5	1.0	8.6	24		101 Indpark 111	CLOSE T1-101-103	6.1	2	6.4	11.8	4.3	12.6	12.0	12.0	13.7	19.0	SCADA LTE LIMIT EXCEEDED
						107 Indpark 111	OPEN 10362	4.4	0.9	4.5	7.8	1.3	7.9	12.0	12.0	112.7	33.0	
							CLOSE 10788											
							OPEN 10388 (ZAPP)											
104	3.2	1.0	3.4	1066		105 Indpark 111	CLOSE T1-104-105	3.0	0.3	3.0	6.4	2.2	6.8	12.0	12.0	12.7	33.0	
							OPEN 10462											
105	4.6	1.0	4.7	1992		104 Indpark 111	CLOSE T1-104-105	3.4	1.7	3.8	6.4	2.2	6.8	9.8	9.8	10.3	16.4	
							OPEN 10562											
106	5.7	1.0	5.8	2172		241 Wing Lane	CLOSE T1-106-241	7.9	2.2	8.2	11.2	3.1	11.6	14.0	15.0	16.0	16.4	0.95 per unit marginal voltage 241 - 106 Ckts
						104 Indpark 111	CLOSE T1-104-160	3.4	1.7	3.8	6.3	0.3	6.3	9.8	9.8	10.3	16.4	
							OPEN 10662											
							OPEN 160-1											
106	5.7	1.0	5.8	2172		102 Indpark 111	CLOSE T1-102-106	6.4	2.2	6.8	12.1	4.9	13.1	9.8	9.8	10.3	16.4	SCADA LTE LIMIT EXCEEDED
							OPEN 10662											
107	4.2	1.0	4.3	4		103 Indpark 112	CLOSE T1-103-107	9.1	2.5	9.4	7.9	1.4	8.0	12.0	12.0	13.0	19.0	
						101 Indpark 111	CLOSE T1-101-103	6.1	2	6.4	11.8	4.2	12.5	12.0	12.0	12.7	19.0	SCADA LTE LIMIT EXCEEDED
							OPEN 10762											
							OPEN 103-38											

2004 T&D OPERATING STUDY
New Bedford District

PINE STREET SUBSTATION #611

Pine Street Substation #611 serves a power supply area consisting of the City of New Bedford a portion of the Town of Dartmouth. During the summer of 2003, peak station load coincident with New Bedford District on 8/22/03 13:00 hours was 74.6 MVA.

Pine Street Substation #611 consists of three 115/13.2 kV transformers:

#112: General Electric 36/48/60 [67] MVA 115/13.2 kV
#114: General Electric 36/48/60 [67] MVA 115/13.2 kV
#114BC: Federal Pacific 36/48/60 [67] MVA 115/13.2 kV

Overload Ratings:

Transformer	Nameplate	Summer Normal Rating No Loss of Life	Summer 12 Hour LTE Rating 1% Loss of Life
#112	36/48/60 [67] MVA	75 MVA	82 MVA
#114	36/48/60 [67] MVA	72 MVA	79 MVA
#114 BC	36/48/60 [67] MVA	72 MVA	89 MVA

Station Capabilities:

Total Station Capacity (N-0) Normal Ratings	Station Firm Capacity (N-1) LTE Ratings	Load Transfers (MVA)	Total LCC (LTE + Transfers)
219 MVA	161 MVA	46 MVA	207 MVA

Station Load Forecast:

2004	2005	2006	2007	2008
93.3 MW	94.2 MW	95.2 MW	96.4 MW	97.7 MW

Switching Actions:

Loss of #112 GE Transformer

Open: Motor-Operated Switch 112E07
Circuit Breaker 112A11
Circuit Breaker 112D11

Circuit Breaker 112C11

Close: Nothing

Loss of #114 GE Transformer

Open: Motor-Operated Switch 114F07
Circuit Breaker 114B11
Circuit Breaker 112A11
Circuit Breaker 112D11

Close: Nothing

Loss of #114BC FPE Transformer

Open: Motor-Operated Switch 11417
Circuit Breaker BC11
Circuit Breaker CB11

Close: Nothing

Distribution Feeder Switching:

For an outage of any of the three (3) transformers, the remaining two transformers can carry full station load of 93.3 MW.

While not required for loss of either transformer, transfer of the station's 13.2kV distribution supply lines via manual and radio-controlled switches may be conducted for additional load reduction. The transfers and switching operations required are shown on the attached table.

Total Transfer: 46 MVA

Summary of Concerns: Pine Street Substation #611

Station:

Based on load projections, Pine Street Substation #611 has adequate firm capability through load forecast year 2013 for a contingency outage of any of the three transformer banks. Please reference power flow diagram **NB-24**. Outage of any bank yields identical results.

Transmission:

From a station capacity perspective, contingency outages of either the #112, #114, or #130 115kV cables is not problematic at Pine Street Substation #611. Post contingency, 115kV line flows on the remaining two cables are within LTE ratings. Please see the appropriate line outages under *345/115kV Bulk Transmission Facility Outages*.

DSS/Distribution:

Of the thirty (30) 13.2kV distribution supply feeders served by Pine Street Substation #611, the following contingency backup scenarios may be thermally limiting:

1. Acushnet Circuit #86 may exceed 8.8 MVA LTE rating by 5% for contingency backup of Pine Street #24 Circuit. As discussed for Acushnet Substation #612, a swap of Highland

Substation to either the lightly-loaded #80 or #83 circuits is a remedial action that is under study.

2. Acushnet Circuit #89N may exceed 8.8 MVA LTE rating by 26% for contingency backup of Pine Street #89S Circuit. Additional load may be removed from the #89 DSS line by transferring a portion of the #404 overhead circuit in the North end of New Bedford to the Industrial Park #104 circuit. The limiting portion of the #89N 13.2kV feeder, approximately 2200 feet of 500 kcmil submarine cable across the Acushnet River, is slated for upgrade to 750 kcmil conductor as part of an EPA-funded superfund remediation project.

3. Pine Street Circuit #72 may exceed 8.8 MVA LTE rating by 4% for contingency backup of Pine Street #70 Circuit. Additional load may be removed from the #70 DSS line by transferring a portion of the Hawthorne #506 circuit to the Fisher Road #524 circuit, or a portion of the Rockdale #501 circuit to the Cross Road #531 circuit. The limiting element on the #75 circuit is 9781 feet of 500 kcmil cable. Alternatively, existing LTE ratings are based upon 6 equally loaded cables per duct bank at 75% load factor. A thermal analysis of the duct banks containing the #72 circuit can be conducted to determine if the cable can be re-rated to a higher rating and remain within applicable thermal limits.

4. Pine Street Circuit #55 may exceed 5.7 MVA LTE SCADA limit by 70% for contingency backup of Pine Street Circuit #73. The applicable thermal limit of 8.8 MVA for 500 kcmil cable is exceeded by 10%. The SCADA LTE limit appears to be set too low. Since the existing cable ratings are based upon criteria for 6 equally loaded cables per duct bank at 75% load factor, a thermal analysis of the duct banks containing the #55 circuit can be conducted to determine if the cable can be re-rated to a higher rating and remain within applicable thermal limits.

5. Pine Street Circuit #72 may exceed 8.8 MVA LTE rating by 4% for contingency backup of Pine Street Circuit #59. Load from Circuit #59 is backed up by both Circuits #72 and #70. Due to the minimal nature of the overload, an investigation can be conducted to determine if the cable can be re-rated to a higher rating and remain within applicable thermal limits.

6. Pine Street Circuit #71 may exceed 8.8 MVA LTE rating by 2% for contingency backup of Pine Street Circuit #3. Due to the minimal nature of the overload, an investigation can be conducted to determine if the cable can be re-rated to a higher rating and remain within applicable thermal limits.

7. Pine Street Circuit #72 may exceed 7.9 MVA LTE rating by 14% (for 400 kcmil cable in the middle of the circuit) for a contingency backup of Pine Street Circuit #59. Additional switching may be conducted to transfer New Bedford High School to the #70 circuit, and the identified overload would be alleviated.

8. Pine Street Circuit #60 may exceed 7.9 MVA LTE rating (for 400 kcmil cable in the middle of the circuit) by 2% for contingency backup of Pine Street Circuit #53. Additional switching may be conducted to transfer a portion of S. Dartmouth Circuit #505 to Hawthorne Circuit #506. Due to the minimal nature of the overload, an investigation can be conducted to determine if the cable can be re-rated to a higher rating and remain within applicable thermal limits.

9. Pine Street Circuit #60 may also exceed 6.8 MVA LTE rating (for 300 kcmil cable in the middle of the circuit) by 15% for contingency backup of Pine Street Circuit #2. Additional switching may be conducted to transfer a portion of S. Dartmouth Circuit #505 to Hawthorne Circuit #506. Due to the minimal nature of the overload, an investigation can be conducted to determine if the cable can be re-rated to a higher rating and remain within applicable thermal limits.

10. Pine Street Circuit #2 may also exceed 6.8 MVA LTE rating (for 300 kcmil cable in the middle of the circuit) by 16% for contingency backup of Pine Street Circuit #60. Additional switching may be conducted to transfer a portion of S. Dartmouth Circuit #505 to Hawthorne Circuit #506. Due to the minimal nature of the overload, an investigation can be conducted to determine if the cable can be re-rated to a higher rating and remain within applicable thermal limits.

11. Pine Street Circuit #54 may exceed 2.7 MVA LTE rating (for 218 feet of #2 Cu cable) by 34% for contingency backup of Pine Street Circuit #4. Upgrading the limiting section of cable to at least 500 kcmil conductor is recommended.

12. Pine Street Circuit #25 may exceed 6.8 MVA LTE rating (for 400 kcmil cable) by 6% for contingency backup of Pine Street Circuit #7. Due to the minimal nature of the overload, an investigation can be conducted to determine if the cable can be re-rated to a higher rating and remain within applicable thermal limits.

13.2 kV Feeder	Backup Circuit	Summer LTE Rating* in MVA	Projected % of LTE 2004	Projected % of LTE 2008
Pine Street #24	Acushnet #86	8.8	105%	111%
Pine Street #89S	Acushnet #89N	8.8	126%	127%
Pine Street #70	Pine Street #72	8.8	104%	104%
Pine Street #73	Pine Street #55	5.7	110%	115%
Pine Street #59	Pine Street #72	8.8	104%	110%
	Pine Street #70	8.8		
Pine Street #3	Pine Street #71	8.8	102%	121%
Pine Street #72	Pine Street #59	7.9	114%	114%
Pine Street #53	Pine Street #60	7.9	102%	107%
Pine Street #2	Pine Street #60	6.8	115%	133%
Pine Street #60	Pine Street #2	6.8	116%	116%
Pine Street #4	Pine Street #54	2.7	134%	134%
Pine Street #7	Pine Street #25	6.8	106%	106%

* The rating of the limiting portion of the circuit, not necessarily rating of first section out of station

4kV Substation and Distribution:

Pine Street Substation #611 feeds two (2) 3.74 kV primary networks in the South End and West End of New Bedford, and a fifteen (15) unit 208/120 Volt secondary network in Downtown New Bedford.

The South Primary Network consists of three (3) primary network substations: Bolton #681, Bonney Street #682, and Grit Street #692. In the South Network, all three (3) of the 13.2/3.74kV transformers either have or are projected to exceed top nameplate ratings during summer peak conditions, all-facilities-in. The table below summarizes the capacity of these 13.2/3.74 kV stations.

3.74 kV Transformer	Normal Rating	2004 Projection	2008 Projection
Bolton	2.5 MVA	2.6 MVA	2.7 MVA
Bonney Street	2.5 MVA	2.9 MVA	3.0 MVA
Grit Street	2.5 MVA	2.7 MVA	2.9 MVA

The Center (West) Primary Network consists of five (5) primary network substations: Depot #685, Second Street #694, Durfee #686, Ash Street #615, and Rockdale #693. In the Center Network, one (1) of the substation transformers either has or is projected to exceed top nameplate ratings during summer peak conditions, all-facilities-in. The table below summarizes the capacity of these 13.2/3.74 kV stations.

3.74 kV Transformer	Normal Rating	2004 Projection	2008 Projection
Depot	3.75 MVA	**2.4 MVA**	**2.5 MVA**
Second Street	3.91 MVA	**2.5 MVA**	**2.6 MVA**
Durfee	2.5 MVA	2.8 MVA	3.0 MVA
Ash Street East	2.5 MVA	**2.2 MVA**	**2.3 MVA**
Ash Street West	3.75 MVA	**2.5 MVA**	**2.6 MVA**
Rockdale	4.20 MVA	**3.2 MVA**	**3.4 MVA**

The Downtown Secondary Network consists of fifteen (15) 13.2kV to 208Y/120 Volt secondary network units fed from seven (7) 13.2kV primary feeders. Due to the lightly-loaded nature of the secondary network, the system is first-contingency secure.

Proposed Integrated Plan:

The suggested actions table listed below will address all of the capacity concerns in the Pine Street Substation #611 power supply area.

The three (3) overloaded transformers at the South Primary Network and the one (1) unit in the Center Primary Network serve integrated 3.74kV primary network systems. There is a proposed project to install cooling fans and thermostatic controls to each of the four transformers to affect an expected 33% increase in the top nameplate rating of these transformers. Estimated cost is $12k per unit, for a total of $48k.

Alternatively, assuming completion of the proposed project to upgrade the Hathaway 13.2/3.74kV substation in the North Primary Network (Acushnet Substation #612), the existing 3 MVA units at Hathaway could be used to replace the 2.5 MVA transformers at two (2) of the affected South Primary Network Stations.

Twelve (12) identified 13.2kV DSS line overloads that occur during load transfers to other Acushnet or Pine Street feeder circuits are under review:

1. The contingency overload of the Acushnet #86 circuit during backup of Pine Street #24 can be remedied by swapping the Highland 4kV substation over to the #80 or #83 13.2kV supply circuits. This was discussed under Acushnet Substation #612.

2. The contingency overload of the Acushnet #89N circuit during backup of Pine Street #89S will be remedied by the upgrade of the submarine portion of the cable crossing the Acushnet River as part of an EPA Superfund Site mitigation project. All ten (10) 13.2kV cables from Acushnet Substation #612 that cross the River at this point must be removed to permit river dredging to remove contaminated soil. The ten (10) cables will all be upgraded to 750 kcmil conductor for 12 MVA LTE rating per circuit, a project reimbursable by the EPA.

3. The contingency overloads of the remaining identified Pine Street circuits may be due to SCADA alarm limits set too low, or are of a marginal nature. The ratings of these cables could be investigated further by analyzing the thermal performance of the various duct banks that these cables run through to ascertain if more generous emergency ratings could be assigned.

Recommended course of action for Pine Street Substation #611

Action	Year needed	Estimated Cost
⇒ Install fans on four (4) 13.2/3.74kV transformers in South and Center Networks	2004	$48K
⇒ Swap Highland Avenue 3.74kV Sub to either circuits #80 or #83 / (	2004	TBD
⇒ Upgrade Acushnet #89N cable as per EPA required submarine cable removals	2005	TBD
⇒ Conduct duct bank thermal evaluation for remaining overloaded cables	2005	0

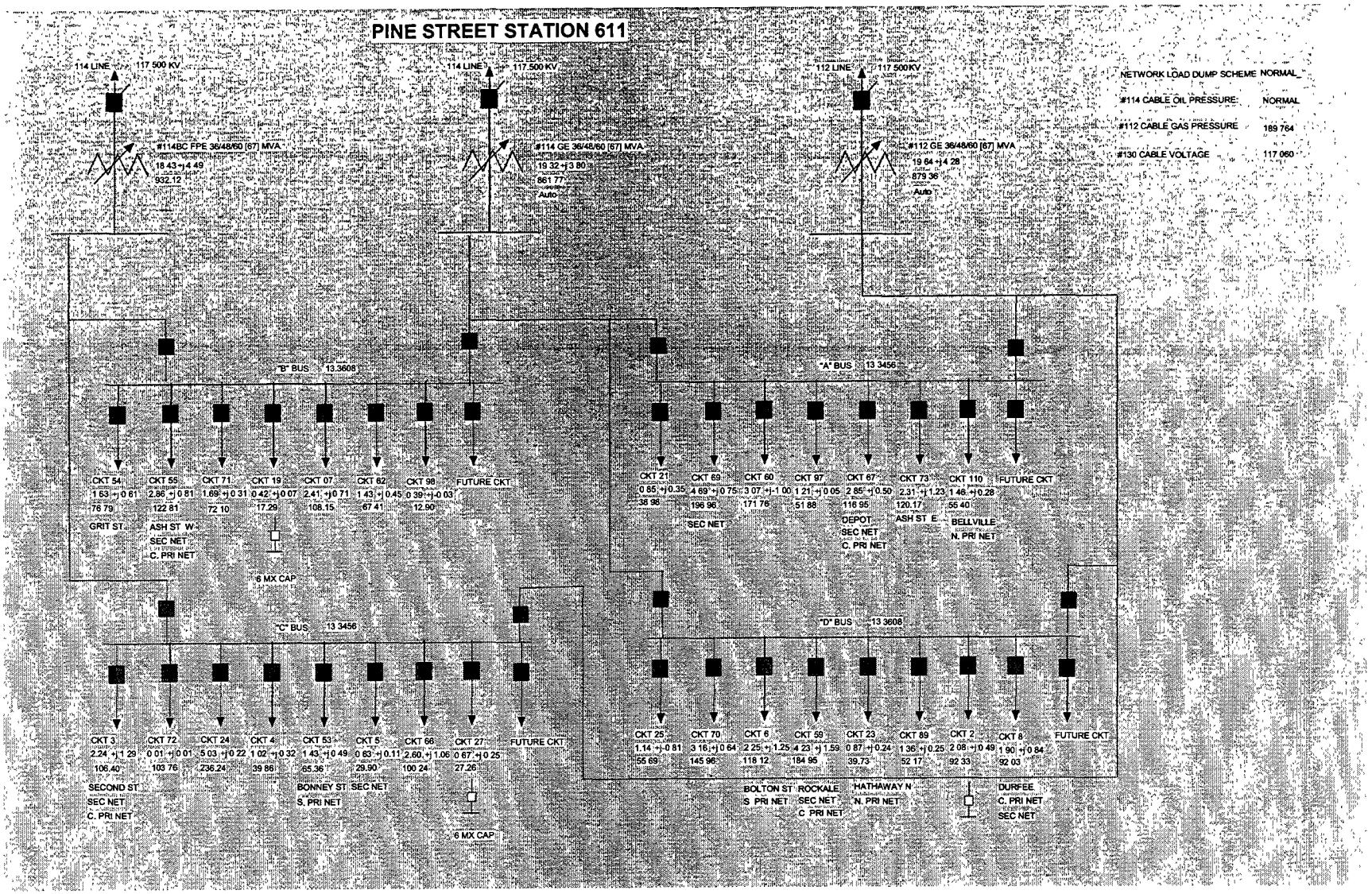
PINE STREET STATION 611
114 LINE
117 500 KV
#114BC FPE 36/48/60 [67] MVA
18 43 +j 4 49
932.12
114 LINE
117 500 KV
#114 GE 36/48/60 [67] MVA
19 32 +j 3 80
861 77
Auto
112 LINE
117 500KV
#112 GE 36/48/60 [67] MVA
19 64 +j 4 28
879 36
Auto
NETWORK LOAD DUMP SCHEME NORMAL
#114 CABLE OIL PRESSURE: NORMAL
#112 CABLE GAS PRESSURE 189 764
#130 CABLE VOLTAGE 117 060
"B" BUS 13.3608
CKT 54 1 63 +j 0 61 76 79 GRIT ST
CKT 55 2.86 +j 0 81 122 81 ASH ST W SEC NET C. PRI NET
CKT 71 1.69 +j 0 31 72 10
CKT 19 0 42 +j 0 07 17.29
CKT 07 2.41 +j 0 71 108.15
CKT 62 1 43 +j 0.45 67 41
CKT 98 0 39 +j 0 03 12.90
FUTURE CKT
6 MX CAP
"A" BUS 13 3456
CKT 21 0 85 +j 0.35 38 98
CKT 69 4 69 +j 0 75 196 96 SEC NET
CKT 60 3 07 +j 1 00 171 76
CKT 97 1 21 +j 0 05 51 88
CKT 67 2 85 +j 0.50 116 95 DEPOT SEC NET C. PRI NET
CKT 73 2.31 +j 1.23 120.17 ASH ST E
CKT 110 1 46 +j 0.28 55 40 BELLVILLE N. PRI NET
FUTURE CKT
"C" BUS 13 3456
CKT 3 2.24 +j 1 29 106.40 SECOND ST SEC NET C. PRI NET
CKT 72 0 01 +j 0 01 103 76
CKT 24 5 03 +j 0 22 236.24
CKT 4 1 02 +j 0 32 39 86
CKT 53 1 43 +j 0 49 65.36 BONNEY ST S. PRI NET
CKT 5 0 63 +j 0.11 29.90 SEC NET
CKT 66 2.60 +j 1.06 100 24
CKT 27 0 67 +j 0 25 27.26
6 MX CAP
FUTURE CKT
"D" BUS 13 3608
CKT 25 1.14 +j 0 81 55 69
CKT 70 3 16 +j 0 64 145 96
CKT 6 2 25 +j 1.25 118 12
CKT 59 4 23 +j 1.59 184 95 BOLTON ST S PRI NET
CKT 23 0 87 +j 0.24 39.73 ROCKALE SEC NET C PRI NET
CKT 89 1 36 +j 0.25 52 17 HATHAWAY N N. PRI NET
CKT 2 2 08 +j 0 49 92 33
CKT 8 1 90 +j 0 84 92 03 DURFEE C. PRI NET SEC NET
FUTURE CKT

NB-24

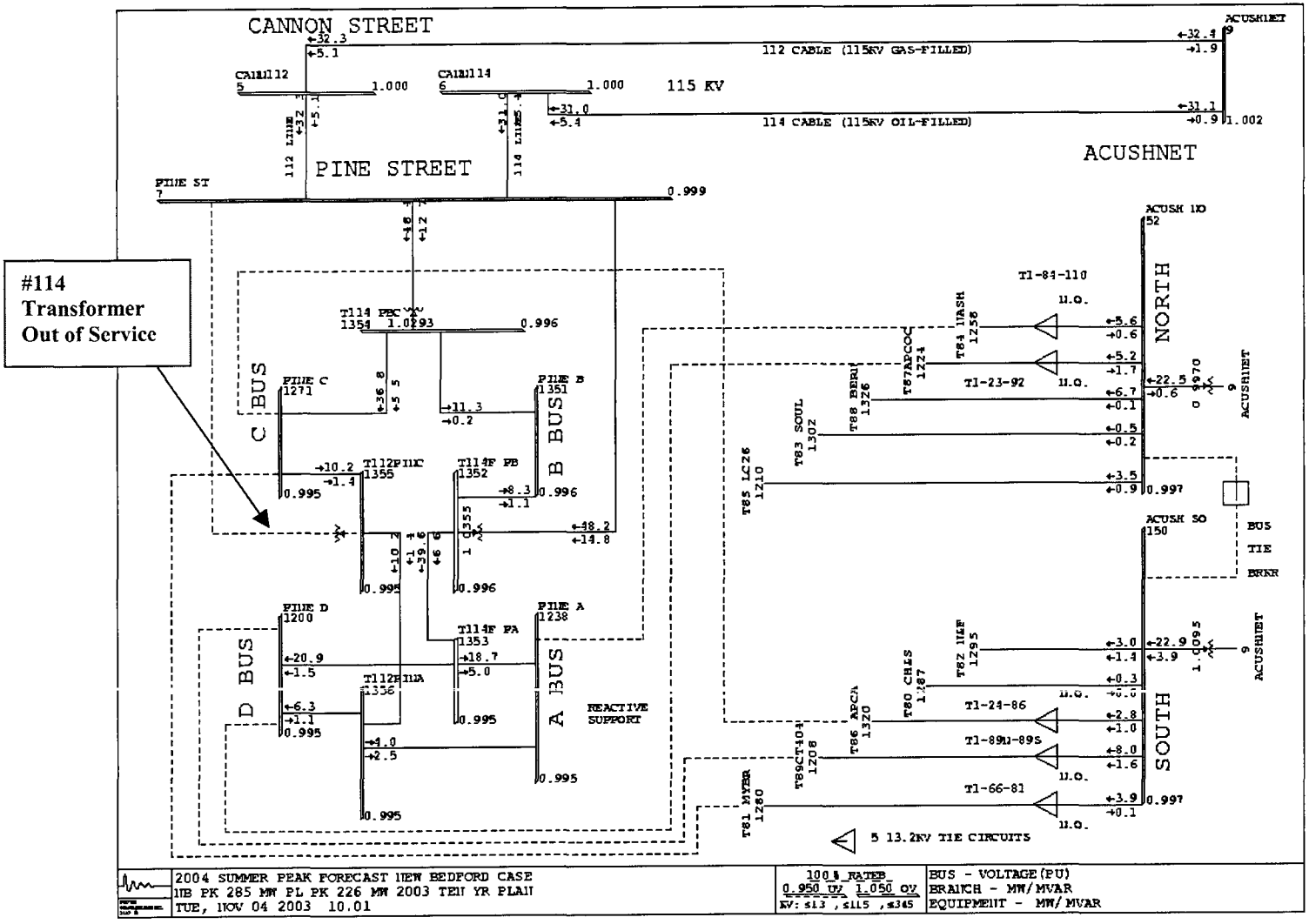
#114
Transformer
Out of Service
CANNON STREET
112 CABLE (115KV GAS-FILLED)
114 CABLE (115KV OIL-FILLED)
115 KV
PINE STREET
ACUSHNET
NORTH
SOUTH
C BUS
B BUS
A BUS
D BUS
REACTIVE SUPPORT
BUS TIE BRKR
5 13.2KV TIE CIRCUITS
2004 SUMMER PEAK FORECAST NEW BEDFORD CASE
NB PK 285 MW PL PK 226 MW 2003 TEN YR PLAN
TUE, NOV 04 2003 10.01
100% RATED
0.950 UV 1.050 OV
KV: ≤13 , ≤115 , ≤345
BUS - VOLTAGE(PU)
BRANCH - MW/MVAR
EQUIPMENT - MW/MVAR

2003 5/10 Year Plan - Year 2004 DSS Line Load Transfers - New Bedford District

BULK SUBSTATION DSS LINE SINGLE-CONTINGENCY ANALYSIS

* Coincident Feeder peaks at Forecasted Summer 2004 District Peaks
* Switching Sequences and Effects of Load Transfer Under Coincident Peak Conditions

CIRCUIT NUMBER	COINCIDENT PEAK LOAD (MW)	(MX)	(MVA)	NUMBER CUSTOMERS	BACKUP CIRCUIT	BACKUP STATION	SWITCHING ACTIONS	BACKUP CIRCUIT LOAD (BEFORE TRANSFER) (MW)	(MX)	(MVA)	BACKUP CIRCUIT LOAD (AFTER TRANSFER) (MW)	(MX)	(MVA)	BACKUP CIRCUIT SCADA LIMITS NORMAL (MVA)	LTE (MVA)	STE (MVA)	TRIP (MVA)	
110	27	11	29		84		CLOSE T1-84-110 OPEN 11011	56	06	56	83	07	83	80	88	92	137	
23	14	07	16		87		CLOSE T1-23-92 OPEN 2311	52	17	55	66	08	66	80	88	92	137	
8	41	16	44		81		CLOSE 827 OPEN 811	39	01	39	81	16	83	80	88	92	137	
24	59	15	61		86		CLOSE T1-24-86 OPEN 2411	28	09	29	88	28	92	80	88	92	137	86 Ckt flow 5% over 8 8 MVA LTE Rating for 2234 feet 500 kcmil cable and 8% over 5 7 MVA LTE for 890 feet 300 kcmil
89S	26	10	28		89N		CLOSE T1-89N-89S OPEN 8911 CLOSE 8657 OPEN 8957	80	16	82	107	29	111	80	88	92	137	89N Ckt flow 27% over 8 8 MVA LTE Rating for 7427 feet 500 kcmil cable Transfer Building 19 to #86 Circuit
66	40	24	47		81		CLOSE T1-66-81 OPEN 6611	39	01	39	80	24	84	80	88	92	164	
70	45	-02	45		502 (72)		CLOSE T1-502-501 OPEN 7011	43	05	43	90	13	91	80	88	92	137	72 Ckt flow 4% over 8 8 MVA Rating 9781 feet of 500 kmcil cable
73	43	23	49		55		CLOSE T1-55-73 OPEN 7311	43	13	45	88	40	97	50	57	60	137	55 Ckt flow 10% over 8 8 MVA Rating for 4000 feet 500 kcmil cable over SCADA LTE and STE
55	43	13	45		73		CLOSE T1-55-73 OPEN 5611	43	23	49	86	36	93	80	97	104	110	73 Ckt flow 19% over 6 8 MVA SCADA Alarm Limit
59	53	22	57		72 502 (70)		CLOSE T1-59-72 OPEN 5911 CLOSE T1-501-502 OPEN 50181 AT ROCKDALE	43 45	05 -02	43 45	54 91	21 12	58 92	80 80	88 88	92 92	137 137	70 Ckt flow 4% over 8 8 MVA LTE Rating for 9781 feet of 500 kcmil cable
71	41	14	43		3		CLOSE 335 OPEN 7135 OPEN 7111	41	23	47	81	39	90	80	88	92	137	3 Ckt flow 2% over 8 8 MVA LTE Rating for 537 feet 500 kmcil cable

2003 5/10 Year Plan - Year 2004 DSS Line Load Transfers - New Bedford District

BULK SUBSTATION DSS LINE SINGLE-CONTINGENCY ANALYSIS

* Coincident Feeder peaks at Forecasted Summer 2004 District Peaks
* Switching Sequences and Effects of Load Transfer Under Coincident Peak Conditions

CIRCUIT NUMBER	COINCIDENT PEAK LOAD (MW)	(MX)	(MVA)	NUMBER CUSTOMERS	BACKUP CIRCUIT	BACKUP STATION	SWITCHING ACTIONS	BACKUP CIRCUIT LOAD (BEFORE TRANSFER) (MW)	(MX)	(MVA)	BACKUP CIRCUIT LOAD (AFTER TRANSFER) (MW)	(MX)	(MVA)	BACKUP CIRCUIT SCADA LIMITS NORMAL (MVA)	LTE (MVA)	STE (MVA)	TRIP (MVA)	
(Pine Street Buses, Cont'd)																		
72	43	05	43		59		CLOSE T1-59-72 OPEN 7211	53	22	57	86	25	90	80	88	92	164	59 Ckt flow 14% over 7 9 MVA LTE Rating for 2317 feet 400 kcmil cable N B High School must be transferred to #71 Circuit with addn'l switching
3	41	23	47		21		CLOSE 2167 OPEN 311	19	07	20	59	29	66	62	68	71	137	
21	19	07	20		3		CLOSE 2167 OPEN 2111	41	23	47	60	31	68	80	88	92	137	
5	27	13	30		NONE		OPEN 511	00	00	00	00	00	00	NOT APPLICABLE				Three secondary network units (#2, #5, #6) Out of Service
67	42	08	43		89S		CLOSE 8927 OPEN 6711	26	10	28	68	20	71	80	88	92	137	
25	36	01	36		7		CLOSE T1-7-25 OPEN 2511	35	0	35	71	00	71	80	88	92	137	
53	24	13	27		60		CLOSE 6057 OPEN 5311	50	17	53	74	32	81	80	88	92	137	60 Ckt flow 2% over 7 9 MVA LTE Rating for 4120 feet 400 kcmil cable
2	26	-60	65 (CAPACITOR)		60		CLOSE 267 OPEN 211 OPEN 2C02	50	17	53	76	19	78	80	88	92	137	60 Ckt flow 15% over 6 8 MVA LTE Rating 698 feet 300 kcmil cable
60	50	17	53		2		CLOSE 267 OPEN 6011 OPEN 2C02	26	-60	65	72	20	75	80	88	92	137	60 Ckt flow 16% > 6 8 MVA LTE Rating 4454 feet 300 kcmil cable
6	31	13	34		60 2		CLOSE 6046 OPEN 611 OPEN 6047 CLOSE 267	50 26	17 -60	53 65	44 63	11 40	45 75	80 80	88 88	92 92	137 137	

2003 5/10 Year Plan - Year 2004 DSS Line Load Transfers - New Bedford District

BULK SUBSTATION DSS LINE SINGLE-CONTINGENCY ANALYSIS

* Coincident Feeder peaks at Forecasted Summer 2004 District Peaks
* Switching Sequences and Effects of Load Transfer Under Coincident Peak Conditions

CIRCUIT NUMBER	COINCIDENT PEAK LOAD (MW)	(MX)	(MVA)	NUMBER CUSTOMERS	BACKUP CIRCUIT	BACKUP STATION	SWITCHING ACTIONS	BACKUP CIRCUIT LOAD (BEFORE TRANSFER) (MW)	(MX)	(MVA)	BACKUP CIRCUIT LOAD (AFTER TRANSFER) (MW)	(MX)	(MVA)	BACKUP CIRCUIT SCADA LIMITS NORMAL (MVA)	LTE (MVA)	STE (MVA)	TRIP (MVA)	
54	27	07	28		4		CLOSE T1-4-54 OPEN 5411	17	06	18	45	14	47	80	88	92	137	
4	17	06	18		54		CLOSE T1-5-54 OPEN 411	27	07	28	45	14	47	50	57	60	137	218 feet of #2 Cu Cable overloaded 34% over 2 7 MVA LTE rating Grit Sub
7	35	00	35		25		CLOSE T1-7-25 OPEN 711	36	0.1	36	72	0.2	72	6.2	68	71	137	25 Ckt 6% > 6 8 MVA LTE Rating 1321 feet 400 kmcil cable
62	26	39	47		69		CLOSE 6947 OPEN 6211	30	1.0	32	56	4.9	74	8.0	88	92	13.7	
69	3.0	10	32		62		CLOSE 6947 OPEN 6911	2.6	39	47	56	51	7.6	80	88	92	137	
97	16	01	16		98		CLOSE K9798T1 OPEN 9711	16	01	16	32	10	34	94	94	99	137	
98	16	01	16		97		CLOSE K9798T1 OPEN 9811	16	01	16	32	10	34	94	94	99	137	

2004 T&D OPERATING STUDY
New Bedford District

WING LANE SUBSTATION #624

Wing Lane Substation #624 serves a power supply area consisting of portions of the Towns of Acushnet and Fairhaven. During the summer of 2003, peak station load coincident with New Bedford District on 8/22/03 13:00 hours was 12.6 MVA.

Wing Lane Substation #624 consists of one 115/13.2 kV transformer:

#114: McGraw-Edison 21/28/35 [39] MVA 115/13.2 kV

Overload Ratings:

Transformer	Nameplate	Summer Normal Rating No Loss of Life	Summer 12 Hour LTE Rating 1% Loss of Life
#114	21/28/35 [39] MVA	45 MVA	49 MVA

Station Capabilities:

Total Station Capacity (N-0) Normal Ratings	Station Firm Capacity (N-1) LTE Ratings	Load Transfers (MVA)	Total LCC (LTE + Transfers)
45 MVA	0 MVA	18.0 MVA	18.0 MVA *

Station Load Forecast:

2004	2005	2006	2007	2008
15.0 MW	15.2 MW	15.3 MW	15.4 MW	15.6 MW

*Based on existing limits of Industrial Park #106 circuit

Switching Actions:

Loss of McGraw/Edison Transformer

1. Isolate Wing Lane Bulk Transformer:

   Open: Circuit Switcher 11472
   Main Circuit Breaker 114B72

   Close: Nothing

2. Transfer Wing Lane #240 circuit to Arsene Street #220 circuit:

   Open: Feeder Breaker #24072 at Wing Lane

   Close: Tie Switch #T2-222-240 on R.O.W.

3. Unload Industrial Park #106 circuit to reduce loading on 750/2-500 kcmil station getaway by transferring Acushnet Avenue #160 circuit to Industrial Park #104 circuit:

   Open: Recloser #160-1 on Acushnet Avenue at R.O.W.

   Close: Tie Switch #T1-104-160 on Phillips Road.

4. Transfer Wing Lane #241 circuit to Industrial Park #106 circuit:

   Open: Feeder Breaker #24172 at Wing Lane

   Close: Tie Switch #T1-106-241 on R.O.W.

5. Transfer A.T.& T. from Wing Lane #242 circuit to Arsene St. #222 circuit:

   Open: Feeder Breaker #24272 at Wing Lane

   Close: 13.2kV Bus tie breaker at A.T. & T.

Distribution Feeder Switching:

For a contingency outage of the Wing Lane transformer, transformers at adjacent substations at Arsene Street #654 and Industrial Park #636 carry the full station load of 15.0 MW. Post contingency, Industrial Park #106 circuit load will be 11.6 MVA, 18% over SCADA LTE limit of 9.8 MVA. The cable getaway from the station is comprised of 750kcmil and 2-500 kcmil, with an LTE rating of 12 MVA. The #106 circuit flow is within SCADA trip setting of 16.4 MVA. Please reference power flow diagrams **NB-25** through **NB-27**.

For 13.2kV distribution circuit transfers, the required switching operations are shown on the attached table.

Total Transfer: 18.0 MVA

Summary of Concerns: Wing Lane Substation #624

Station:

Based on load projections, Wing Lane Substation #624 has adequate firm capability via 13.2kV load transfers to other stations through load forecast year 2013 for a contingency outage of single-ended transformer bank. An investigation of the SCADA LTE rating applied to the #106 tie circuit is recommended, and a thermal analysis of the duct banks emanating the station is recommended to ascertain if the LTE rating of the circuit can be increased. Alternatively, upgrade of bifurcated 500 kcmil section of the cable getaway to 750 kcmil for its entire length (254 feet) should be investigated.

Transmission:

From a station capacity perspective, a contingency outages of either #114 115kV line (Tremont to Acushnet) is not problematic at Wing Lane Substation #624. Post contingency, the substation can be switched over to the parallel #112 Tremont-Acushnet 115kV line.

DSS/Distribution:

1. The Industrial Park #106 circuit may exceed its 9.8 MVA SCADA LTE limit by 18% during contingency backup of the Wing Lane #241 circuit. The SCADA LTE limit may be set too low for the 750 / 2-500 kcmil cable getaway, which is the first section of the cable emanating the station. The remainder of the circuit is a mixture of 336 and 477 ACSR overhead conductor, with an LTE rating of 16.3 MVA. If the rating of the #106 circuit cable getaway is increased to at least 12 MVA, the circuit would have adequate backup capability up to Summer 2008 load level.

13.2 kV Feeder	Backup Circuit	Summer LTE Rating in MVA	Projected % of LTE 2004	Projected % of LTE 2008
Wing Lane. #241	Industrial Park #106	9.8	118%	124%

4kV Substation and Distribution:

There are no 4kV substations or circuits served by Wing Lane Substation #624.

Proposed Integrated Plan:

The suggested actions table listed below will address all of the capacity concerns in the Wing Lane Substation #624 power supply area.

Investigate the rating of the Industrial Park #106 circuit cable getaway to ascertain if a higher LTE rating can be obtained. If necessary, upgrade 239 feet of 2-500 kmcil conductor to 750 kcmil conductor to obtain 12 MVA LTE rating.

Recommended course of action for Wing Lane Substation #624

Action	Year needed	Estimated Cost
⇒ Upgrade 239 feet of 2-500 kcmil conductor to 750 kcmil cable	2008	$TDB

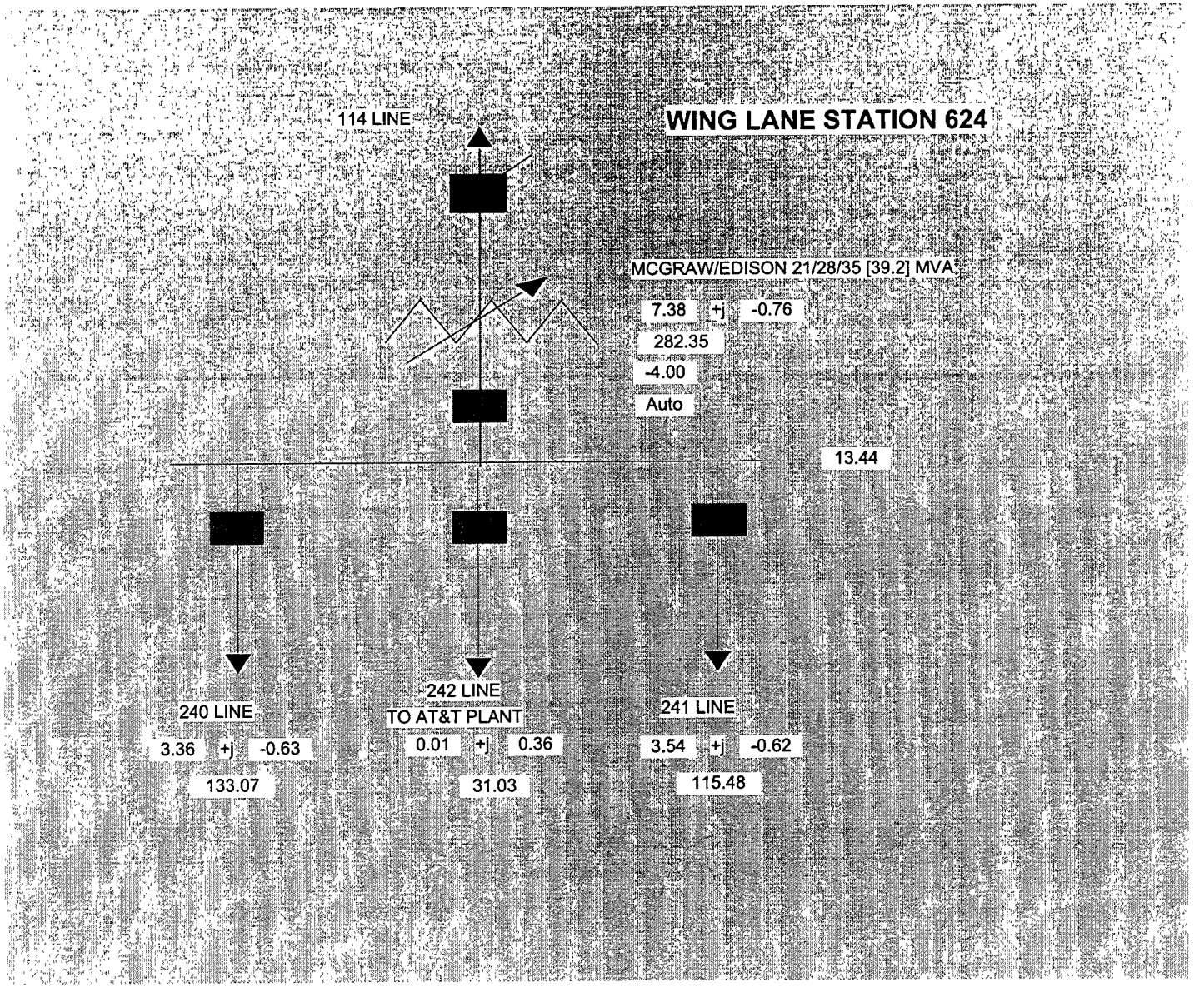
WING LANE STATION 624
114 LINE
MCGRAW/EDISON 21/28/35 [39.2] MVA
7.38 +j -0.76
282.35
-4.00
Auto
13.44
240 LINE
3.36 +j -0.63
133.07
242 LINE
TO AT&T PLANT
0.01 +j 0.36
31.03
241 LINE
3.54 +j -0.62
115.48

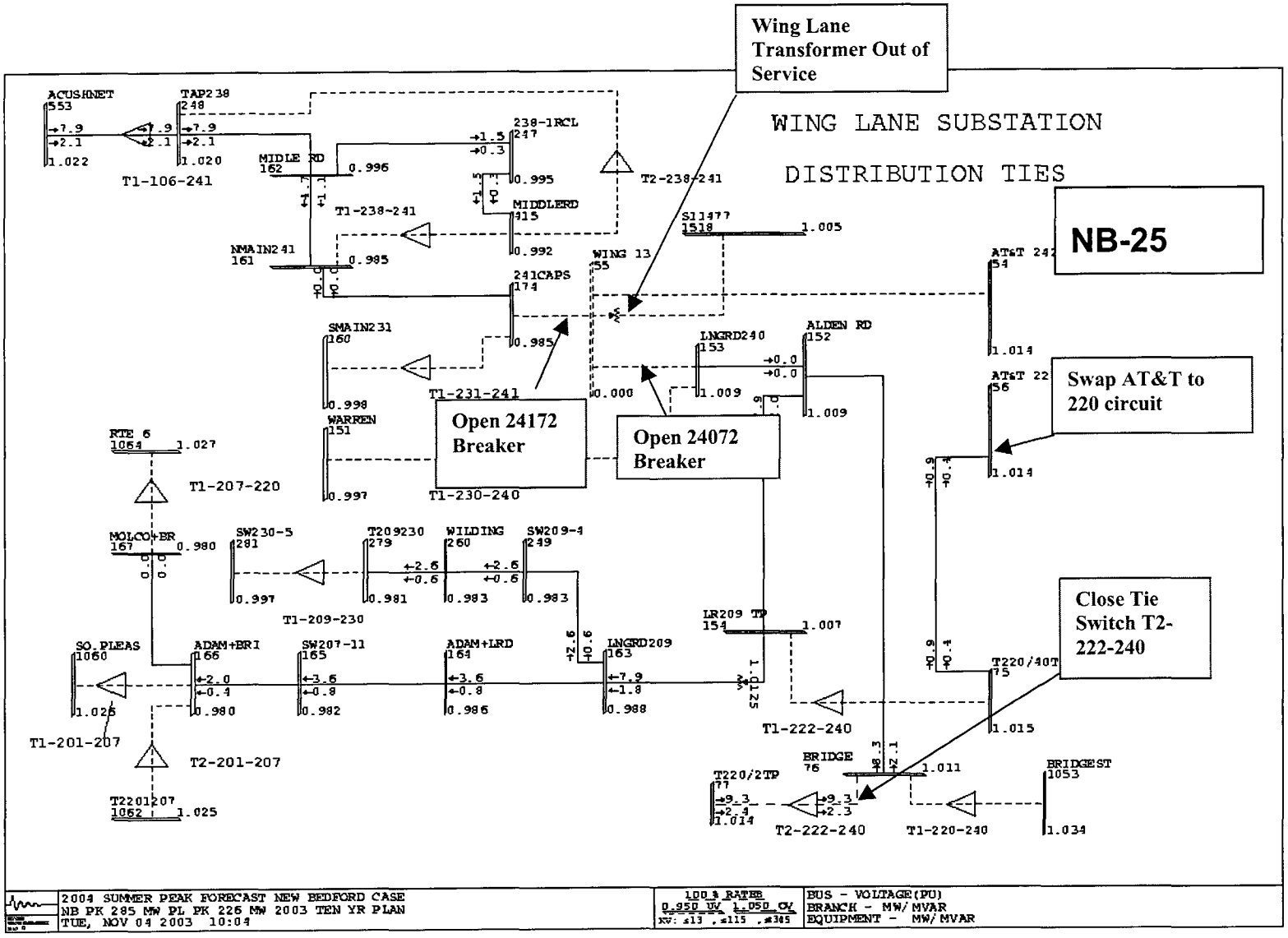
Wing Lane Transformer Out of Service
WING LANE SUBSTATION
DISTRIBUTION TIES
NB-25
Swap AT&T to 220 circuit
Open 24172 Breaker
Open 24072 Breaker
Close Tie Switch T2-222-240
ACUSHNET
TAP238
238-1RCL
MIDLE RD
MIDDLERD
T1-106-241
T1-238-241
T2-238-241
NMAIN241
241CAPS
WING 13
SMAIN231
T1-231-241
T1-230-240
LNGRD240
ALDEN RD
AT&T 242
AT&T 22
RTE 6
T1-207-220
WARREN
MOLCO+ER
SW230-5
T209230
WILDING
SW209-4
T1-209-230
LR209 TP
SO.PLEAS
ADAM+BRI
SW207-11
ADAM+LRD
LNGRD209
T220/40T
T1-222-240
T1-201-207
T2-201-207
BRIDGE
T220/2TP
T2-222-240
T1-220-240
BRIDGEST
2004 SUMMER PEAK FORECAST NEW BEDFORD CASE
NB PK 285 MW PL PK 226 MW 2003 TEN YR PLAN
TUE, NOV 04 2003 10:04
100% RATEB
0.950 UV 1.050 OV
BUS - VOLTAGE(PU)
BRANCH - MW/MVAR
EQUIPMENT - MW/MVAR

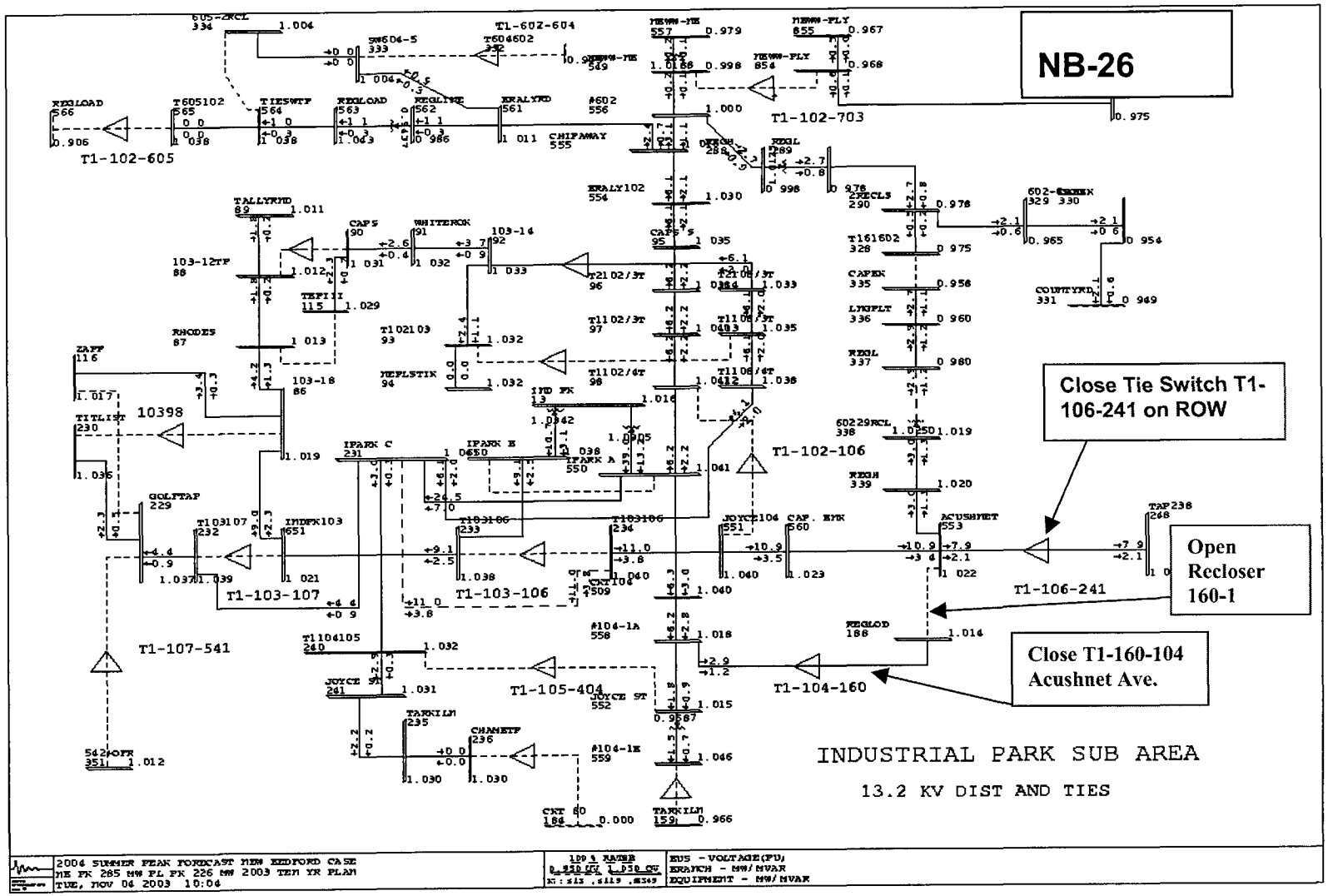
NB-26
Close Tie Switch T1-106-241 on ROW
Open Recloser 160-1
Close T1-160-104 Acushnet Ave.
T1-102-605
T1-102-703
T1-102-106
T1-103-107
T1-103-106
T1-106-241
T1-107-541
T1-105-404
T1-104-160
INDUSTRIAL PARK SUB AREA
13.2 KV DIST AND TIES
2004 SUMMER PEAK FORECAST NEW BEDFORD CASE
TUE, NOV 04 2003 10:06

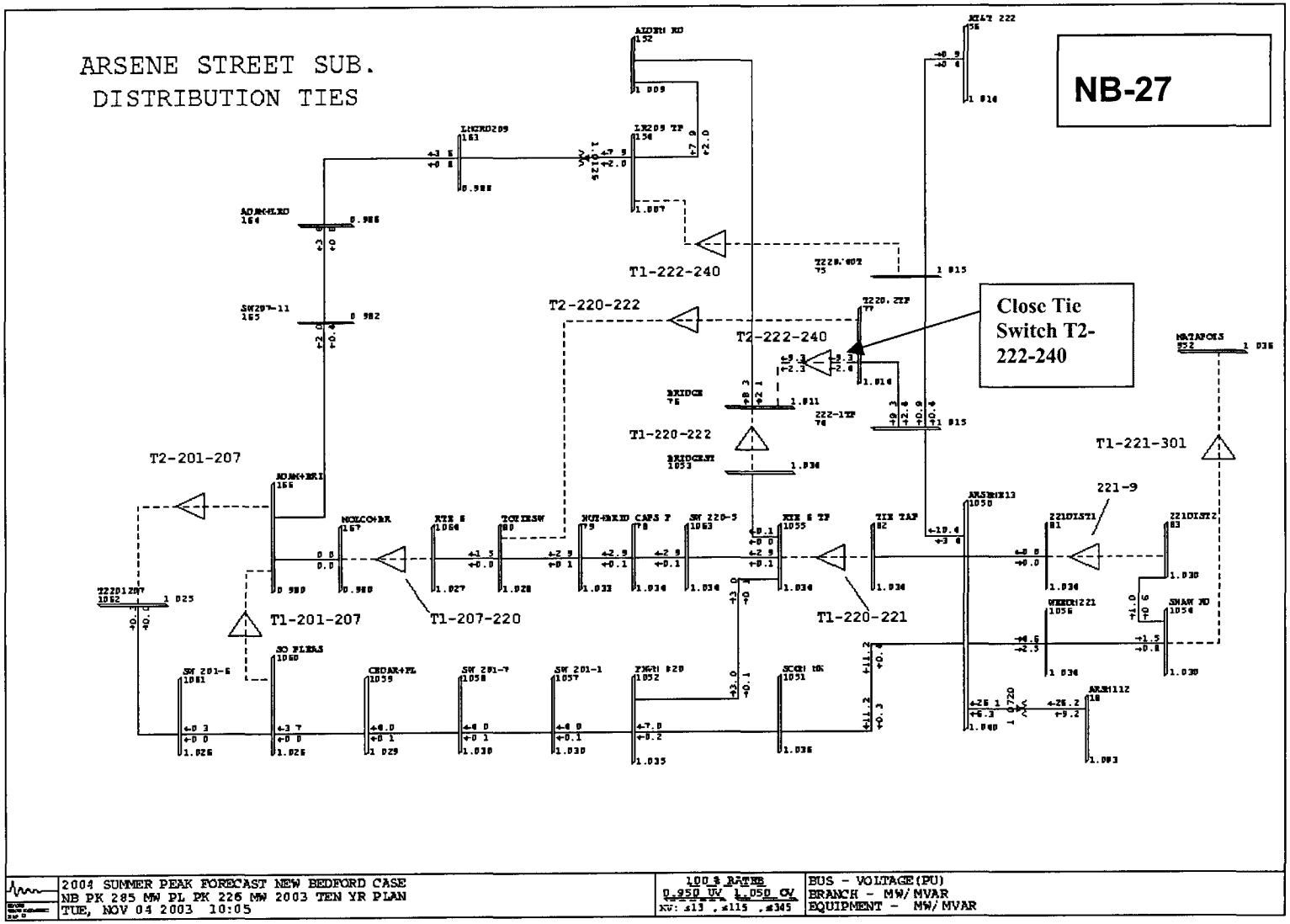
ARSENE STREET SUB.
DISTRIBUTION TIES
NB-27
Close Tie Switch T2-222-240
T1-222-240
T2-220-222
T2-222-240
T1-220-222
T2-201-207
T1-201-207
T1-207-220
T1-220-221
T1-221-301
221-9
2004 SUMMER PEAK FORECAST NEW BEDFORD CASE
NB PK 285 MW PL PK 226 MW 2003 TEN YR PLAN
TUE, NOV 04 2003 10:05
100 % RATES
0.950 UV 1.050 OV
KV: ≤13 , ≤115 , ≥345
BUS - VOLTAGE(PU)
BRANCH - MW/MVAR
EQUIPMENT - MW/MVAR

2003 5/10 Year Plan - Year 2004 DSS Line Load Transfers - New Bedford District

BULK SUBSTATION DSS LINE SINGLE-CONTINGENCY ANALYSIS

* Coincident Feeder peaks at Forecasted Summer 2004 District Peaks
* Switching Sequences and Effects of Load Transfer Under Coincident Peak Conditions

CIRCUIT NUMBER	COINCIDENT PEAK LOAD (MW)	(MX)	(MVA)	NUMBER CUSTOMERS	BACKUP CIRCUIT	BACKUP STATION	SWITCHING ACTIONS	BACKUP CIRCUIT LOAD (BEFORE TRANSFER) (MW)	(MX)	(MVA)	BACKUP CIRCUIT LOAD (AFTER TRANSFER) (MW)	(MX)	(MVA)	BACKUP CIRCUIT SCADA LIMITS NORMAL (MVA)	LTE (MVA)	STE (MVA)	TRIP (MVA)	PROBLEM AREAS
Wing Lane Substation																		
240	9.3	2.3	9.6	2545		222 Arsene St	CLOSE T1-222-240 OPEN 24072	0.9	0.5	1.0	10.4	3.4	10.9	15.4	21.0	22.0	32.0	
241	7.9	2.2	8.2	2829		106 IndPark 111	CLOSE T1-106-241 OPEN 24172	5.9	2.6	6.4	11.0	3.8	11.6	9.8	9.8	10.3	16.4	Exceeds SCADA LTE Rating 18% *Investigate re-rating for 750 kcmil cable*
						104 IndPark 111	OPEN 160-1 CLOSE T1-104-160	3.4	1.7	3.8	6.3	3.0	7.0	9.8	9.8	10.3	16.4	at 12 MVA
242	0.0	0.0	0.0	1		222 Arsene St	CLOSE AT&T TIE OPEN 24272	0.9	0.5	1.0	0.9	0.5	1.0	15.4	21.0	22.0	32.0	

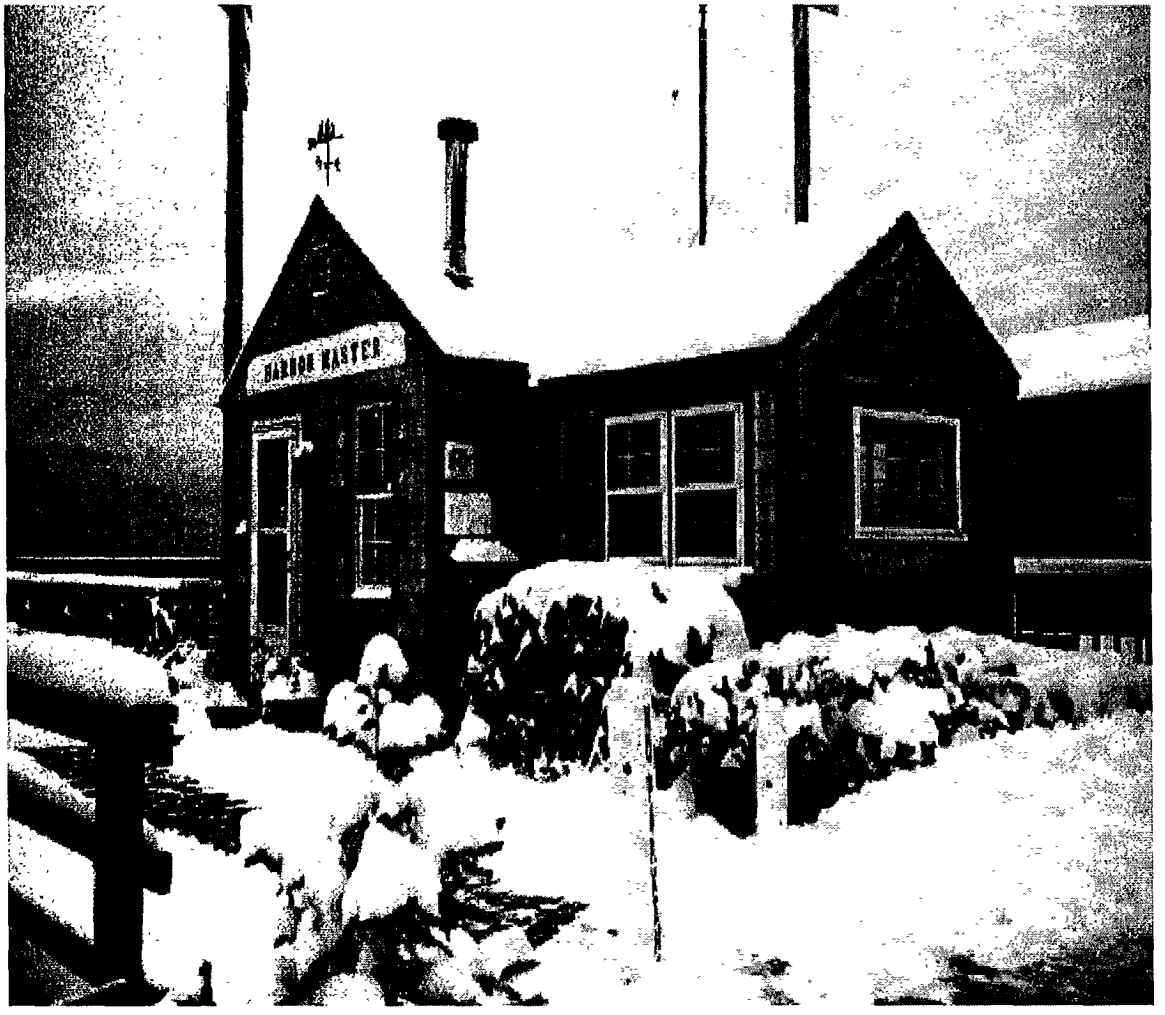

Town of Duxbury Harbormaster's Office

Plymouth District

Bulk Substation Transformer Outages
Distribution Supply Line Outages
Thermal Results and Remedial Switching Actions

2004 T&D OPERATING STUDY
Plymouth District

DUXBURY SUBSTATION #738

Duxbury Substation #738 serves a power supply area consisting of all or portions of the Towns of Duxbury, Kingston, and Marshfield, and Pembroke. During the summer of 2003, peak station load coincident with Plymouth District on 8/04/03 18:00 hours was 28.5 MVA.

Duxbury Substation #738 consists of two 115/23.0 kV transformers:

#117: McGraw-Edison 30/40/50 [56] MVA 115/23.0 kV
#191: McGraw-Edison 30/40/50 [56] MVA 115/23.0 kV

Overload Ratings:

Transformer	Nameplate	Summer Normal Rating No Loss of Life	Summer 12 Hour LTE Rating 1% Loss of Life
#117	30/40/50 [56] MVA	62 MVA	68 MVA
#191	30/40/50 [56] MVA	62 MVA	67 MVA

Station Capabilities:

Total Station Capacity (N-0) Normal Ratings	Station Firm Capacity (N-1) LTE Ratings	Load Transfers (MVA)	Total LCC (LTE + Transfers)
124 MVA	67 MVA	24 MVA	91 MVA

Station Load Forecast:

2004	2005	2006	2007	2008
29.5 MW	30.4 MW	30.9 MW	31.4 MW	31.7 MW

Switching Actions:

Loss of #117 Transformer

Open: Circuit Switcher B11722
Main Circuit Breaker 117B22

Close: Bus Tie Breaker T-22

Loss of #191 Transformer

Open: Circuit Switcher B19122
Main Circuit Breaker 191B22

Close: Bus Tie Breaker T-22

Distribution Feeder Switching:

For either transformer outage, remaining transformer carries full station load of 29.5 MW.

While not required for loss of either transformer, transfer of the station's 23kV distribution supply lines via manual switches may be conducted for additional load reduction. The transfers and switching operations required are shown on the attached table.

Total Transfer: 24.0 MVA

Summary of Concerns: Duxbury Substation #738

Station:

Based on load projections, Duxbury Substation #738 has adequate firm capability through load forecast year 2013 for a contingency outage of either transformer bank. Please reference power flow diagrams **PL-1** and **PL-2**.

Transmission:

From a station capacity perspective, contingency outages of either the #117 or #191 115kV lines is not problematic at Duxbury Substation #738. Loss of the #191 line, if it also affects Marshfield Substation #739, which would result in the outage of two (2) 23kV transformer banks, may require load shedding, and is discussed further under the #191 line outage at *Bulk Transmission Facility Outages*.

DSS/Distribution:

1. Marshfield Substation #739 Circuit #21 may reach 100% of 21.0 MVA SCADA LTE rating for contingency backup of Duxbury #25 Circuit. Actual conductor LTE rating of 28.5 MVA for 336 ACSR conductor is not exceeded. Changing the SCADA alarm to match actual conductor LTE rating is recommended.

23.0 kV Feeder	Backup Circuit	Summer LTE Rating in MVA	Projected % of LTE 2004	Projected % of LTE 2008
Duxbury #25	Marshfield #21	21.0 (SCADA) 28.5 (336 ACSR condr)	100% **74%**	105% **78%**

4kV Substation and Distribution:

Duxbury Substation #738 feeds two (2) 23/4.16 kV distribution substations: S. Duxbury Substation #719 and Marshfield Hills Substation #728.

The table below summarizes the capacity of these 23.0/4.16 kV stations versus forecasted Summer peak loads:

4.16 kV Transformer	Normal Rating	2004 Projection	2008 Projection
S. Duxbury	2.00 MVA	**1.7 MVA**	**1.8 MVA**
Marshfield Hills	3.725 MVA	**2.7 MVA**	**2.8 MVA**

Proposed Integrated Plan:

The suggested actions table listed below will address all of the capacity concerns in the Duxbury Substation #738 power supply area.

One (1) minor 23 kV DSS line overloads that occur during load transfers to Marshfield Substation's #21 circuit are currently under review. The 21 MVA SCADA LTE rating for the Marshfield #21 line should be increased to 28.5 MVA, the actual LTE rating for 336 ACSR conductor.

Recommended course of action for Duxbury Substation #738

Action	Year needed	Estimated Cost
⇒ Investigated SCADA LTE rating increase to 28.5 MVA LTE for 336 ACSR condr.	2005	$0

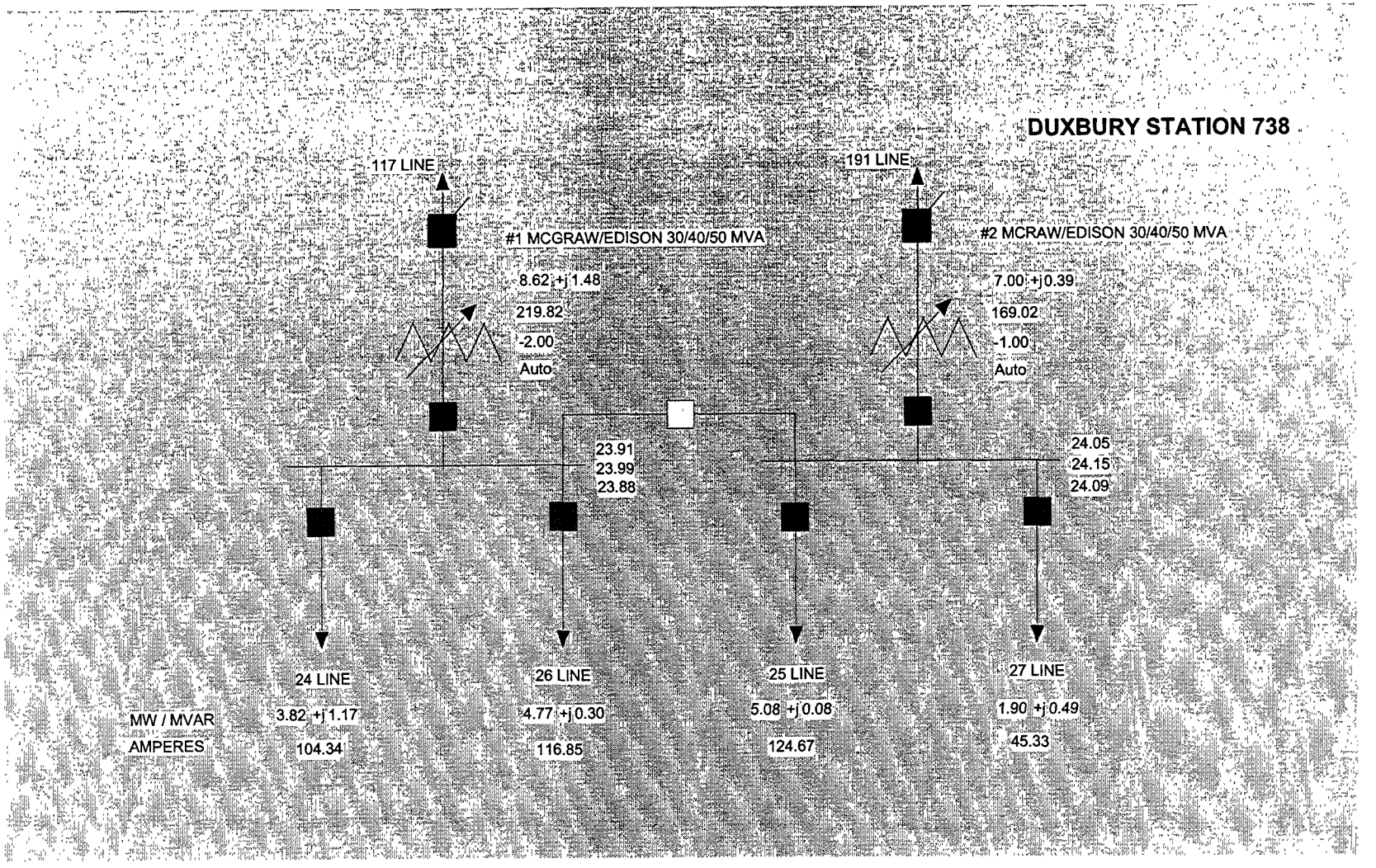
DUXBURY STATION 738
117 LINE
191 LINE
#1 MCGRAW/EDISON 30/40/50 MVA
#2 MCRAW/EDISON 30/40/50 MVA
8.62 +j 1.48
219.82
-2.00
Auto
7.00 +j 0.39
169.02
-1.00
Auto
23.91
23.99
23.88
24.05
24.15
24.09
24 LINE
26 LINE
25 LINE
27 LINE
MW / MVAR
AMPERES
3.82 +j 1.17
104.34
4.77 +j 0.30
116.85
5.08 +j 0.08
124.67
1.90 +j 0.49
45.33

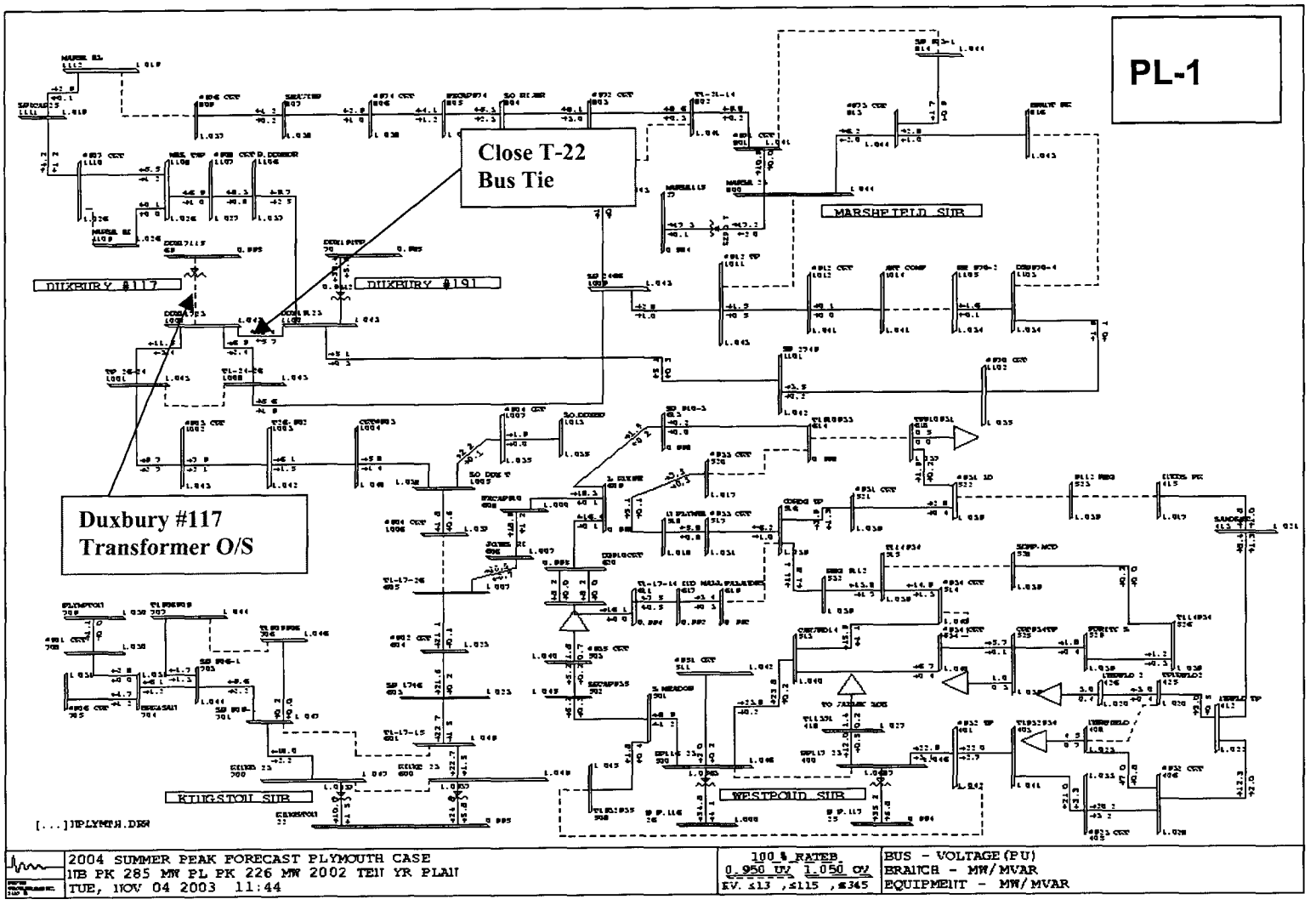
PL-1
Close T-22
Bus Tie
Duxbury #117
Transformer O/S
DUXBURY #117
DUXBURY #191
MARSHFIELD SUB
KINGSTON SUB
WESTPOND SUB
[...]IPLYMTH.DRW
2004 SUMMER PEAK FORECAST PLYMOUTH CASE
1IB PK 285 MW PL PK 226 MW 2002 TEN YR PLAN
TUE, NOV 04 2003 11:44
100 % RATEB
0.950 UV 1.050 OV
KV. ≤13 ,≤115 ,≥345
BUS - VOLTAGE (PU)
BRANCH - MW/MVAR
EQUIPMENT - MW/MVAR

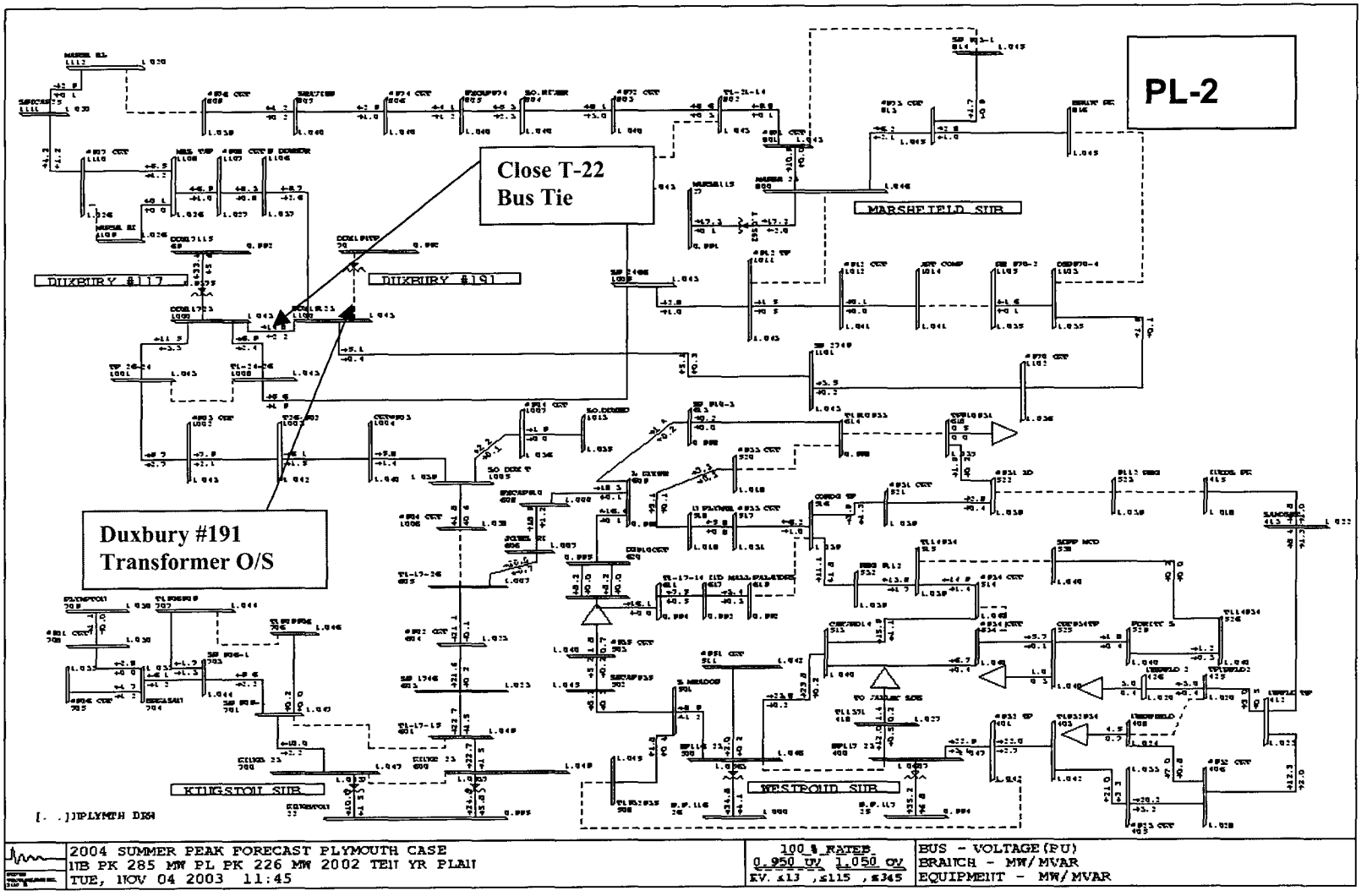
PL-2
Close T-22
Bus Tie
Duxbury #191
Transformer O/S
DUXBURY #117
DUXBURY #191
MARSHFIELD SUB
KINGSTON SUB
WESTPOND SUB
2004 SUMMER PEAK FORECAST PLYMOUTH CASE
HB PK 285 MW PL PK 226 MW 2002 TEN YR PLAN
TUE, NOV 04 2003 11:45
100 % RATED
0.950 UV 1.050 OV
EV. ≤13 ,≤115 ,≤345
BUS - VOLTAGE(PU)
BRANCH - MW/MVAR
EQUIPMENT - MW/MVAR

2003 5/10 Year Plan - Year 2004 DSS Line Load Transfers - Plymouth District

BULK SUBSTATION DSS LINE SINGLE-CONTINGENCY ANALYSIS

* Coincident Feeder peaks at Forecasted Summer 2004 District Peaks
* Switching Sequences and Effects of Load Transfer Under Coincident Peak Conditions

CIRCUIT NUMBER	COINCIDENT PEAK LOAD (MW)	(MX)	(MVA)	NUMBER CUSTOMERS	Normal RTG (MVA)	BACKUP CIRCUIT	BACKUP STATION	SWITCHING ACTIONS	BACKUP CIRCUIT LOAD (BEFORE TRANSFER) (MW)	(MX)	(MVA)	(AFTER TRANSFER) (MW)	(MX)	(MVA)	BACKUP CIRCUIT SCADA LIMITS NORMAL (MVA)	LTE (MVA)	STE (MVA)	TRIP (MVA)	PROBLEM AREAS
Duxbury Substation																			
24	6.9	2.4	7.3	1851	37	26	Duxbury #117	CLOSE T1-24-26 OPEN 2422	11.5	3.4	12.0	18.4	5.9	19.3	37.0	43.0	45.0	47.0	
26	11.5	3.4	12.0	3281	37	24	Duxbury #117	CLOSE T1-24-26 OPEN 2622	6.9	2.4	7.3	18.5	5.8	19.4	37.0	43.0	45.0	47.0	
25	9.7	-0.3	9.7	2464	13	21	Marshfield	CLOSE T1-21-25 OPEN 2522	10.9	0.0	10.9	21.0	1.5	21.1	20.0	21.0	23.0	24.0	Flow at 100% of 21 MVA SCADA LTE
27	5.1	0.4	5.1	1829	37	22	Marshfield	CLOSE T1-22-27 OPEN 2722	6.2	-2.2	6.6	11.4	-1.4	11.5	20.0	21.0	23.0	24.0	

2004 T&D OPERATING STUDY
Plymouth District

KINGSTON SUBSTATION #735

Kingston Substation #735 serves a power supply area consisting of all or portions of the Towns of Kingston, Duxbury, Plympton, and Plymouth. During the summer of 2003, peak station load coincident with Plymouth District on 8/04/03 18:00 hours was 23.1 MVA.

Kingston Substation #735 consists of two 115/23.0 kV transformers:

#192: Allis-Chalmers 12/16/20 [22.4] MVA 115/23.0 kV
#193: Allis-Chalmers 12/16/20 [22.4] MVA 115/23.0 kV

Overload Ratings:

Transformer	Nameplate	Summer Normal Rating No Loss of Life	Summer 12 Hour LTE Rating 1% Loss of Life
#117	12/16/20 [22.4] MVA	29 MVA	31 MVA
#191	12/16/20 [22.4] MVA	27 MVA	29 MVA

Station Capabilities:

Total Station Capacity (N-0) Normal Ratings	Station Firm Capacity (N-1) LTE Ratings	Load Transfers (MVA)	Total LCC (LTE + Transfers)
56 MVA	29 MVA	12.6 MVA	41.6 MVA

Station Load Forecast:

2004	2005	2006	2007	2008
29.8 MW	30.1 MW	30.6 MW	31.1 MW	31.2 MW

Switching Actions:

Loss of #192 Transformer

Open: Circuit Switcher 19252
Main Circuit Breaker 192B52
Feeder Breaker #1752 *

Close: Bus Tie Breaker T1-52
Tie Switch #T1-17-26 *

*The transfer of the #17 line to the Duxbury #25 line must be done before closing Kingston Bus Tie Breaker

Loss of #193 Transformer

Open: Circuit Switcher 19352
Main Circuit Breaker 193B52
Feeder Breaker #1552 *

Close: Bus Tie Breaker T1-52
Tie Switch #T1-901-930 (ties Kingston #15 line to the West Pond #10 Line). *

*The transfer of the #15 line to the West Pond #10 line must be done before closing Kingston Bus Tie Breaker

Distribution Feeder Switching:

For either transformer outage, remaining transformer carries station load of 29.8 MW after required distribution supply switching as described below..

As shown, transfer of at least one (1) of the station's two (2) 23kV distribution supply lines via manual switches must be conducted for additional load reduction, before the station 23kV bus tie breaker is closed. The transfers and switching operations required are shown on the attached table.

Total Transfer: 12.6 MVA

Summary of Concerns: Kingston Substation #735

Station:

Based on load projections, Kingston Substation #735 has adequate firm capability through load forecast year 2013 for a contingency outage of either transformer bank. Please reference power flow diagrams **PL-3** and **PL-4**.

Transmission:

From a station capacity perspective, contingency outages of either the #192 or #193 115kV lines are not problematic at Kingston Substation #735; loss of these lines are identical to the loss of a transformer. The single-contingency outages of the #117 or #191 lines are not problematic at Kingston, as tie switch #T1-117-191 or #T2-117-101 can be closed to restore the outaged Kingston transformer bank.

The single-contingency outages of the #117 and #191 lines are discussed further under *Bulk Transmission Facility Outages*.

DSS/Distribution:

1. At Summer peak conditions, Kingston Substation #735 Circuit #17 can be transferred to the Duxbury #26 line, or the West Pond #14 line, using the switching shown in the Table. Do not transfer the Kingston #17 line to the Kingston #15 line, as one 12/16/20 MVA transformer at Kingston will exceed LTE rating.

2. Contingency backup of the Kingston #15 line via the West Pond #10 line is via the #901 and #930 23kV circuits, by feeding reclosers backwards. Reclosing must be turned off on these circuits in this configuration.

4kV Substation and Distribution:

Kingston Substation #735 feeds three (3) 23/4.16 kV distribution substations: Kingston 4kV Local #735, Jones River #722, and Plympton #746.

The table below summarizes the capacity of these 23/4.16 kV stations versus forecasted Summer peak loads:

4.16 kV Transformer	Normal Rating	2004 Projection	2008 Projection
Kingston Local	2.50 MVA	**1.4 MVA**	**1.5 MVA**
Jones River *	2.00 MVA	**2.0 MVA**	2.1 MVA
Plympton	1.50 MVA	**1.1 MVA**	**1.3 MVA**

**Fans have been added to this unit in an attempt to increase the top nameplate rating to 2.6 MVA*

Proposed Integrated Plan:

The suggested actions table listed below will address all of the capacity concerns in the Kingston Substation #735 power supply area.

The contingency backup of the Kingston #15 line by the West Pond #10 line may be problematic from a system protection standpoint, due to the need to provide backup through the underlying 23kV system via the #901 and #930 circuits by feeding reclosers backwards. The installation of bypass switches on these reclosers would avoid this complication, at an estimated cost of $20k per installation.

The top nameplate rating of 2 MVA of the Jones River 4.16kV substation may be exceeded at the 2008 Summer forecasted peak load level. Upgrading the station to a 3.75 MVA or 5 MVA unit by rotating in a unit from another 4.16kV station would address this situation.

Recommended course of action for Kingston Substation #735

Action	Year needed	Estimated Cost
⇒ Investigate upgrade of Jones River Substation to a 5 MVA transformer by 2008	2008	$TDB
⇒ Investigate installation of bypass switches on reclosers on 901/930 circuits.	2005	$20k

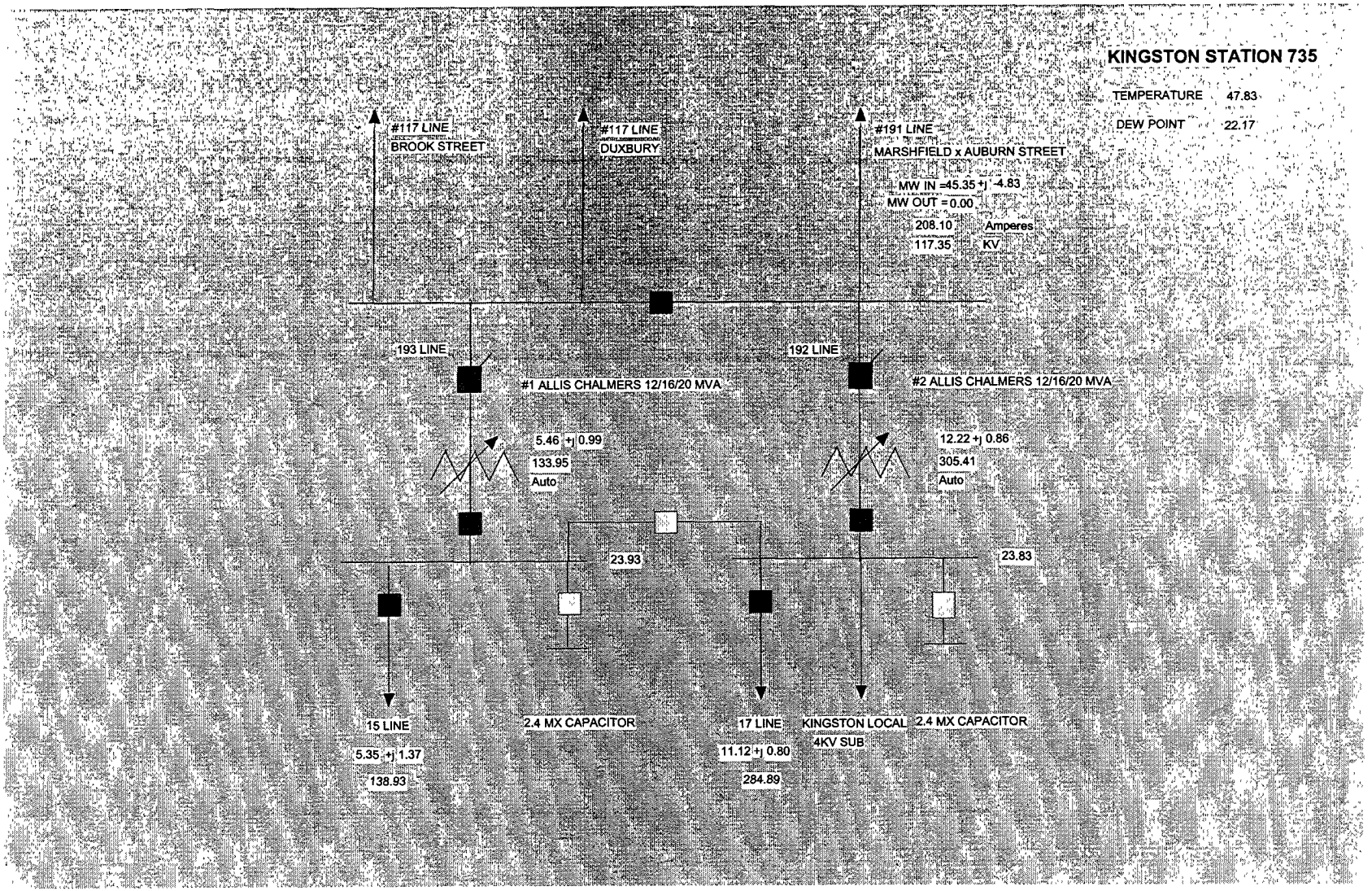
KINGSTON STATION 735
TEMPERATURE 47.83
DEW POINT 22.17
#117 LINE
BROOK STREET
#117 LINE
DUXBURY
#191 LINE
MARSHFIELD x AUBURN STREET
MW IN =45.35 +j -4.83
MW OUT = 0.00
208.10 Amperes
117.35 KV
193 LINE
192 LINE
#1 ALLIS CHALMERS 12/16/20 MVA
#2 ALLIS CHALMERS 12/16/20 MVA
5.46 +j 0.99
133.95
Auto
12.22 +j 0.86
305.41
Auto
23.93
23.83
15 LINE
5.35 +j 1.37
138.93
2.4 MX CAPACITOR
17 LINE
11.12 +j 0.80
284.89
KINGSTON LOCAL
4KV SUB
2.4 MX CAPACITOR

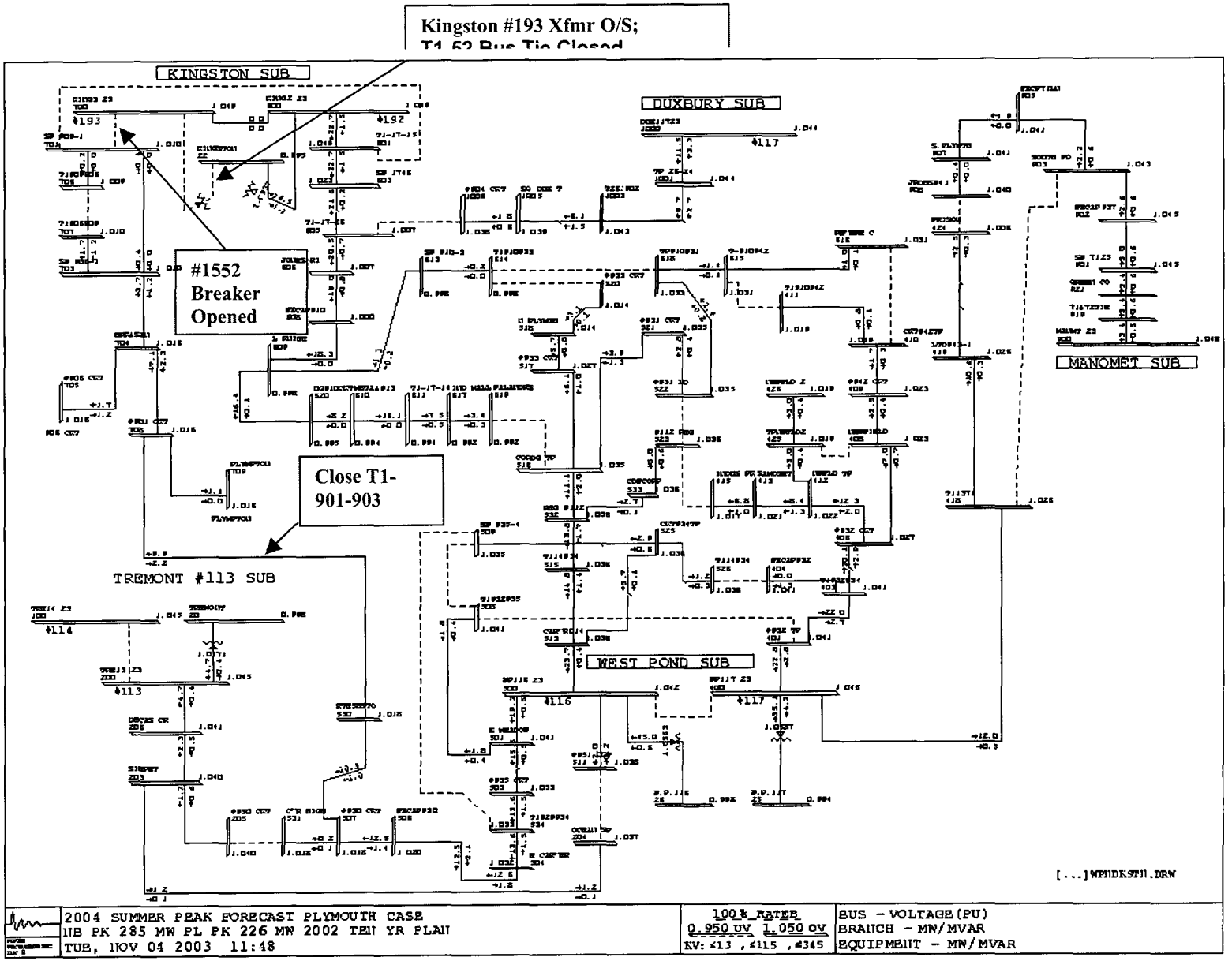
Kingston #193 Xfmr O/S;
T1-52 Bus Tie Closed
KINGSTON SUB
DUXBURY SUB
MANOMET SUB
WEST POND SUB
TREMONT #113 SUB
#1552
Breaker
Opened
Close T1-
901-903
2004 SUMMER PEAK FORECAST PLYMOUTH CASE
WB PK 285 MW PL PK 226 MW 2002 TEN YR PLAN
TUE, NOV 04 2003 11:48
100 % RATED
0.950 OV 1.050 OV
KV: <13 , <115 , <345
BUS - VOLTAGE(PU)
BRANCH - MW/MVAR
EQUIPMENT - MW/MVAR

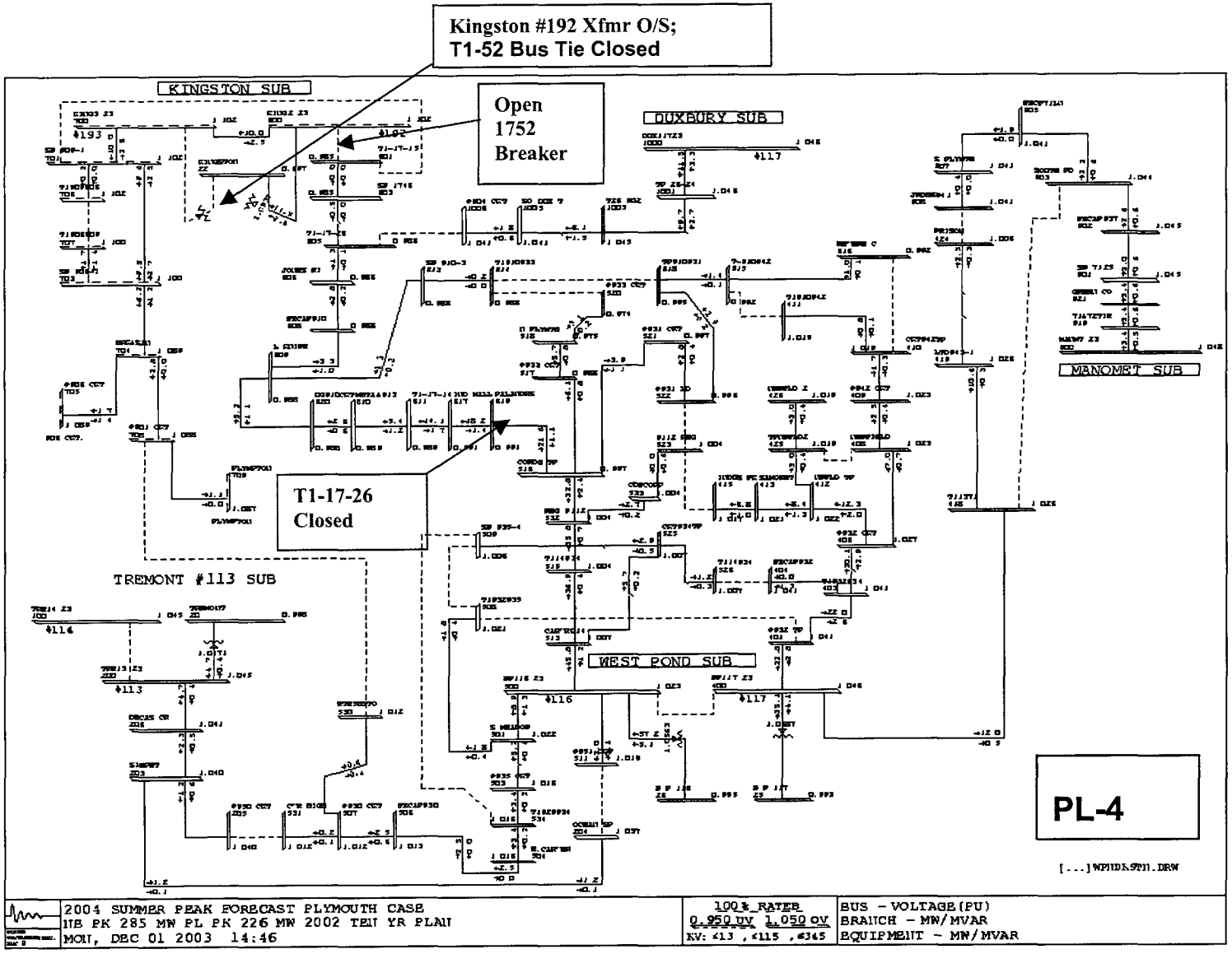
Kingston #192 Xfmr O/S;
T1-52 Bus Tie Closed
Open
1752
Breaker
T1-17-26
Closed
KINGSTON SUB
DUXBURY SUB
MANOMET SUB
TREMONT #113 SUB
WEST POND SUB
PL-4
2004 SUMMER PEAK FORECAST PLYMOUTH CASE
ITB PK 285 MW PL PK 226 MW 2002 TEN YR PLAN
MON, DEC 01 2003 14:46
100% RATER
0.950 UV 1.050 OV
KV: <13 , <115 , <345
BUS - VOLTAGE(PU)
BRANCH - MW/MVAR
EQUIPMENT - MW/MVAR

2003 5/10 Year Plan - Year 2004 DSS Line Load Transfers - Plymouth District

BULK SUBSTATION DSS LINE SINGLE-CONTINGENCY ANALYSIS

* Coincident Feeder peaks at Forecasted Summer 2004 District Peaks
* Switching Sequences and Effects of Load Transfer Under Coincident Peak Conditions

CIRCUIT NUMBER	COINCIDENT PEAK LOAD (MW)	(MX)	(MVA)	NUMBER CUSTOMERS	Normal RTG (MVA)	BACKUP CIRCUIT	BACKUP STATION	SWITCHING ACTIONS	BACKUP CIRCUIT LOAD (BEFORE TRANSFER) (MW)	(MX)	(MVA)	(AFTER TRANSFER) (MW)	(MX)	(MVA)	BACKUP CIRCUIT SCADA LIMITS NORMAL (MVA)	LTE (MVA)	STE (MVA)	TRIP (MVA)	PROBLEM AREAS
Kingston Substation																			
17	22.7	1.4	22.7	3099	21	26	Duxbury #117	CLOSE T1-17-26 OPEN 1752	11.5	3.4	12.0	33.7	3.9	33.9	37	43	45	47	
						15	Kingston #193	CLOSE T1-15-17 OPEN 1752	10.0	-2.2	10.2	32.7	0.7	32.7	21	28	30	38	Kingston #193 Transformer 18% > 29 MVA LTE #15 Line 21% > 18 MVA LTE Rating
						14	West Pond 116	CLOSE T1-14-17 OPEN 1752	23.7	0.5	23.7	45.8	0.7	45.8	27	28	30	32	Assumes upgrade of #14 line completed 6/1 SCADA Limits to be updated
15	10.0	-2.2	10.2	3493	21	10	W Pond #116	CLOSE T1-901-930* OPEN 1552	8.9	1.2	9.0	19.2	0.5	19.2	27	28	30	32	

* Will result in reverse flow through reclosers on 901 and 930 circuits

2004 T&D OPERATING STUDY
Plymouth District

MANOMET SUBSTATION #721

Manomet Substation #721 serves a power supply area consisting of portions of the Town of Plymouth (including Manomet, Chiltonville, Cedarville, Vallersville, and Sagamore). This power supply area also encompasses the Pine Hills, LLC development, and backup reserve station service for the Entergy Pilgrim nuclear plant. During the summer of 2003, peak station load coincident with Plymouth District on 8/04/03 18:00 hours was 13.3 MVA.

Manomet Substation #721 consists of one 115/23.0 kV transformer:

#108: Allis-Chalmers 12/16/20 [22.4] MVA 115/23.0 kV

Overload Ratings:

Transformer	Nameplate	Summer Normal Rating No Loss of Life	Summer 12 Hour LTE Rating 1% Loss of Life
#108	12/16/20 [22.4] MVA	27 MVA	29 MVA

Station Capabilities:

Total Station Capacity (N-0) Normal Ratings	Station Firm Capacity (N-1) LTE Ratings	Load Transfers (MVA)	Total LCC (LTE + Transfers)
27 MVA	0 MVA	21.9 MVA	21.9 MVA

Station Load Forecast:

2004	2005	2006	2007	2008
18.3 MW	20.8 MW	23.2 MW	24.8 MW	28.4 MW

** These forecasted amounts do not reflect 6.6 MVA in load increases caused by three (3) large customer projects, brought to the Company's attention in December 2003.*

Switching Actions:

Loss of #108 Transformer

Open: Circuit Switcher 10812
Main Circuit Breaker 108B12
Feeder Breaker #7312

Close: Tie Switch #T1-13-71 (tie to West Pond)
Tie Switch #T1-73-89 (to Valley #108 transformer)

Note: Manomet 23kV bus backfeed from West Pond #13 line to feed #72 line in this configuration

Distribution Feeder Switching:

For outage of the Manomet transformer, the West Pond Substation #737 and Valley Substation #715 carry the full station load of 18.3 MW.

As shown, transfer of at least one (1) of the station's two (2) 23kV distribution supply lines via manual switches must be conducted for additional load reduction, before the station 23kV bus tie breaker is closed. The transfers and switching operations required are shown on the attached table.

Total Transfer: 21.9 MVA

Summary of Concerns: Manomet Substation #721

Station:

Based on *previously forecasted* load projections, Manomet Substation #721 had adequate firm capability through load forecast year 2008 for a contingency outage of the 12/16/20 MVA transformer bank. Please reference power flow diagram **PL-5**. Based upon the appearance of large step load increases expected in the corridor between Manomet Substation #721 and West Pond Substation #737, this power supply area has inadequate firm capability starting in Summer 2005, due to limitations posed by the #13 23kV DSS line.

For a contingency outage of the Valley Substation #715 15/20/25 MVA transformer bank, Manomet Substation #721 has inadequate firm capability starting load forecast year 2005, when upgrade of the Manomet 12/16/20 MVA transformer to at least a 30/40/50 MVA rated transformer bank will be required.

Transmission:

From a station capacity perspective, a single contingency outage of the #108 115kV line is not problematic at Manomet Substation #721; loss of this line, a lateral transmission line emanating from Horse Pond Tap Station #718, is identical to the loss of a transformer.

The single-contingency outage performance of the #108 transmission line is discussed further under *Bulk Transmission Facility Outages*.

DSS/Distribution:

1. At Summer peak condition, Manomet Substation #721 #73 line can be transferred to the Valley #89 line by closing the T1-73-89 switch on the ROW at Ship Pond Road; however, post-contingency loading on the #89 line will be 27.8 MVA, 39% over 20 MVA SCADA LTE limit and in excess of 22 MVA SCADA trip setting. The #89 line is constructed of 795 ACSR conductor with a 1200 Amp station breaker, capable of a 49 MVA LTE rating. The SCADA alarm and trip setting should be updated.

   Second, by Summer 2007 forecasted load levels, 1.9 miles of 3/0 ACSR conductor on the #73 line will exceed LTE rating during contingency backup of the Valley #89 DSS line. Upgrade

of this 1.9 mile section of line to at least 795 ACSR conductor, for a 49 MVA LTE rating, will be required.

2. Contingency backup of the Manomet Substation #72 line must be conducted through the underlying 23kV distribution system, as there is no DSS line backup to the #72 line. The #72 line, also denominated as the #940 circuit, is backed up by the #938 circuit off the #73 line. Backup procedure is to replace 40T fuses at a normally-open tie point between the #938 and #940 circuits at pole 46/80 on Route 3A. Fuses are replaced with solid disconnect switches where are stored in a bag on the pole.

4kV Substation and Distribution:

Manomet Substation #721 feeds two (2) 23/4.16 kV distribution substations: Manomet #741 and South Plymouth #740.

The table below summarizes the capacity of these 23/4.16 kV stations versus forecasted Summer peak loads:

4.16 kV Transformer	Normal Rating	2004 Projection	2008 Projection
Manomet*	3.725 MVA	**2.7 MVA**	**3.1 MVA**
South Plymouth*	2.00 MVA	**1.4 MVA**	**1.6 MVA**

** Fans have been added to this unit in an attempt to increase top nameplate rating by 33%*

Proposed Integrated Plan:

The suggested actions table listed below will address all of the capacity concerns in the Manomet Substation #721 power supply area.

The contingency backup of the Manomet #89 line by the Valley #89 line may be due SCADA alarm and trip settings being exceeded. Since the conductor LTE rating is 49 MVA, these settings should be modified.

The Valley power supply area is a high-growth area due to Pine Hills LLC development project, a 2800-home open-spaced, mixed-use development in the Southern portion of the Town of Plymouth. System upgrades necessary to support this project have been ascertained and factored into NSTAR's 10-year construction plans.

Due to the recent announcement of another development of a new shopping center on Long Pond Road in Plymouth, some of the system upgrades deemed necessary for Pine Hills would have to be accelerated. One of these projects is the upgrade of the West Pond #13 line to larger size conductor for 2.9 miles, from the Substation to Long Pond Road. The upgrade is estimated at $750k, and must be completed prior to Summer 2004 to support the load transfers identified above for contingency backup of the Manomet Substation or the Manomet #71 line.

An additional identified upgrade is the replacement of the Manomet 12/16/20 MVA transformer with a new 30/40/50 MVA unit, with station equipment rated for 64 MVA LTE. This is currently required by Summer 2008, but is now required by Summer 2004 due to the additional large customer load on the #13 line. Estimated cost is $1.5 million.

Another identified upgrade is the reconductoring of 1.9 miles of the #73 DSS line from 3/0 ACSR conductor to at least 795 ACSR conductor, will be required by Summer 2007, at an estimated cost of $600k.

As established by a Service Agreement between ENTERGY and NSTAR, Manomet Substation is required to reserve enough capacity to provide emergency shutdown/startup power for Pilgrim Nuclear Station Offsite Wheeling Requirements. This emergency shutdown/startup power would be supplied by Manomet's 72 Feeder. As a backup to the 72 Feeder and by way of the Manomet bus, the 71 Feeder would act as a second source bringing a supply of power from West Pond #117 Substation should there be a loss of the Manomet 23 kV transformer.

On an annual basis, ENTERGY submits to the Company three items: 1) The amount of load required by Pilgrim for emergency shutdown/startup power; 2) The power factor level; and 3) The three specific years designated as the study period. The Company then runs several contingencies to determine the effects, if any, which this additional load may have on the system, making recommendations accordingly when needed. For the past several years, the load and power factor levels submitted by ENTERGY have been 4.7 MW at a power factor level of 87.5%. This analysis has been conducted with the Pilgrim emergency shutdown/startup power in-service at 4.7 MW at a power factor of 87.5% lagging.

Recommended course of action for Manomet Substation #721

Action	Year needed	Estimated Cost
⇒ Increase SCADA alarm limits on #89 line for contingency backup of #73 line	2004	$0
⇒ Upgrade 2.9 miles of West Pond #13 line to 795 ACSR conductor	2005	$750k
⇒ Upgrade 1.9 miles of Manomet #73 line to 795 ACSR conductor	2007	$600k
⇒ Upgrade Manomet 12/16/20 MVA transformer to 30/40/50 MVA unit	2005	$1.5 M

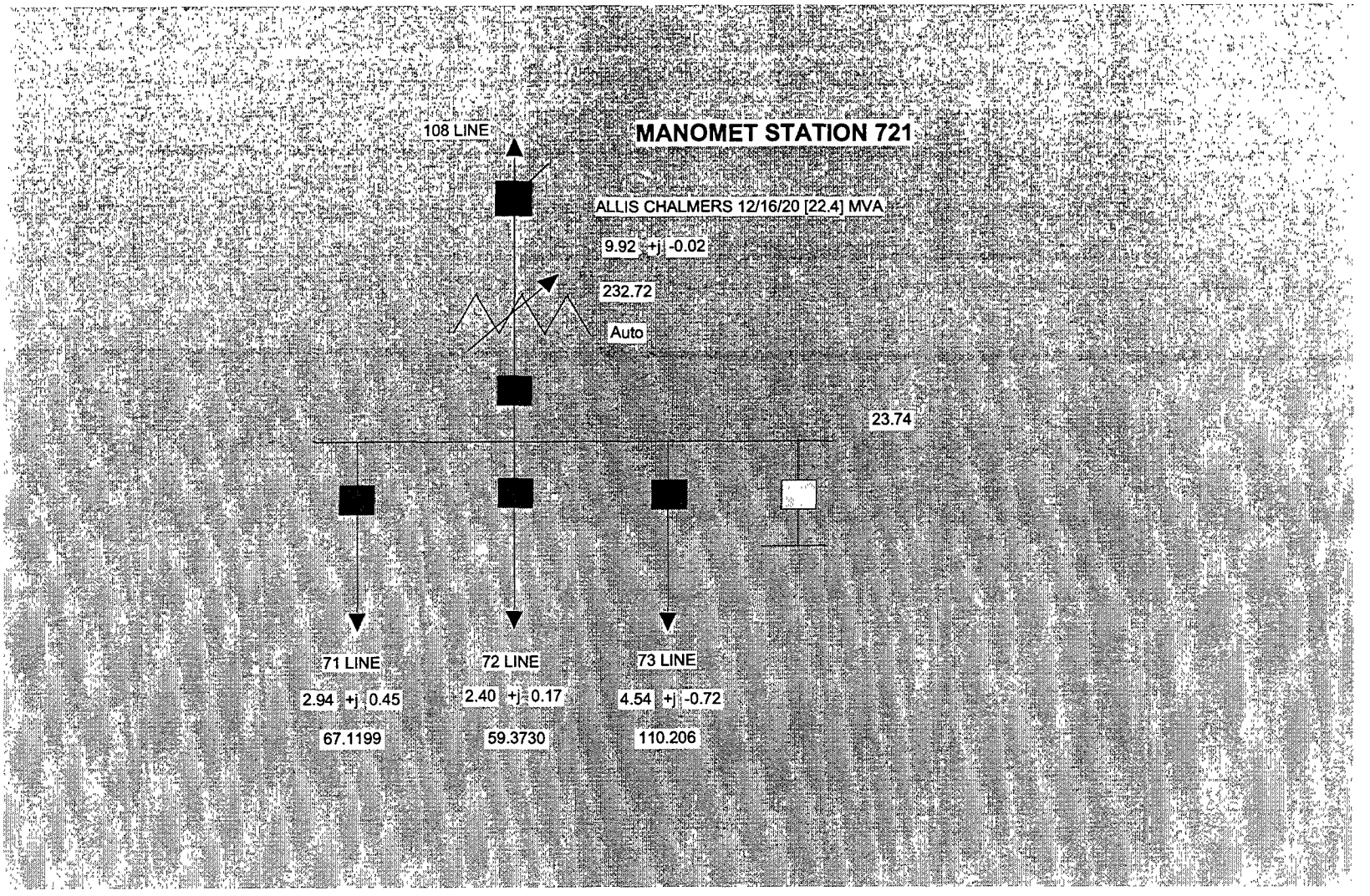
MANOMET STATION 721
108 LINE
ALLIS CHALMERS 12/16/20 [22.4] MVA
9.92 +j -0.02
232.72
Auto
23.74
71 LINE
2.94 +j 0.45
67.1199
72 LINE
2.40 +j 0.17
59.3730
73 LINE
4.54 +j -0.72
110.206

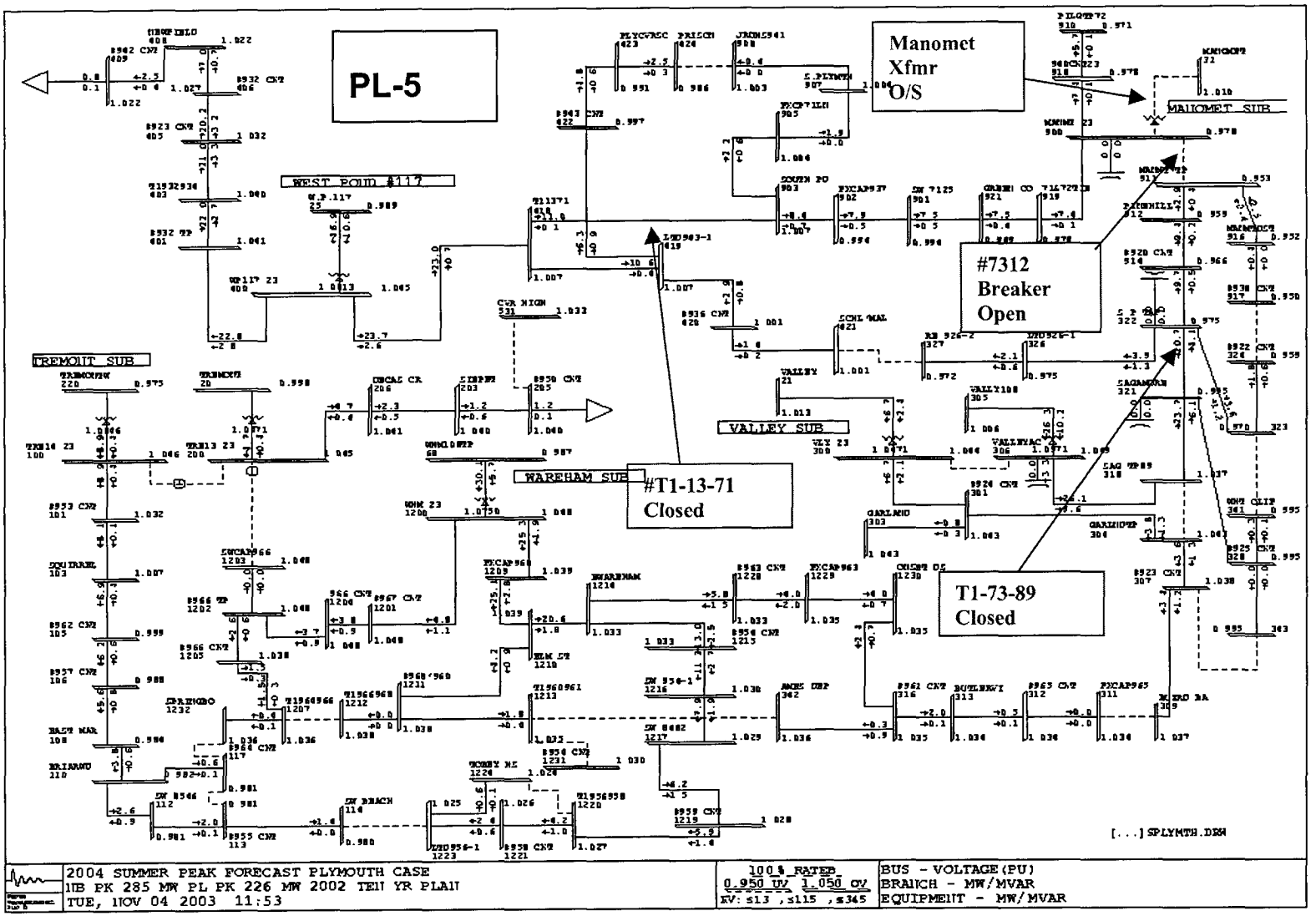

2004 SUMMER PEAK FORECAST PLYMOUTH CASE
HB PK 285 MW PL PK 226 MW 2002 TEN YR PLAN
TUE, NOV 04 2003 11:53

100 % RATED
0.950 UV 1.050 OV
KV: ≤13 , ≤115 , ≤345

BUS - VOLTAGE (PU)
BRANCH - MW/MVAR
EQUIPMENT - MW/MVAR

2003 5/10 Year Plan - Year 2004 DSS Line Load Transfers - Plymouth District

BULK SUBSTATION DSS LINE SINGLE-CONTINGENCY ANALYSIS

* Coincident Feeder peaks at Forecasted Summer 2004 District Peaks
* Switching Sequences and Effects of Load Transfer Under Coincident Peak Conditions

CIRCUIT NUMBER	COINCIDENT PEAK LOAD (MW)	(MX)	(MVA)	NUMBER CUSTOMERS	Normal RTG (MVA)	BACKUP CIRCUIT	BACKUP STATION	SWITCHING ACTIONS	BACKUP CIRCUIT LOAD (BEFORE TRANSFER) (MW)	(MX)	(MVA)	(AFTER TRANSFER) (MW)	(MX)	(MVA)	BACKUP CIRCUIT SCADA LIMITS NORMAL (MVA)	LTE (MVA)	STE (MVA)	TRIP (MVA)	PROBLEM AREAS
Manomet Substation																			
71	3 4	-0 5	3 4	1077			13 W Pond #117	CLOSE T1-13-71 OPEN 7112	12 2	0 5	12 2	15 7	0 7	15 7	21	26	27	28	
72*	7 4	0 0	7 4	1590		NONE ***	NONE ***	SEE BELOW OPEN 7212	0 0	0 0	0 0	0 0	0 0	0 0	N/A				No DSS backup
73**	2 9	-0 5	2 9	2716			89 Valley #108	CLOSE T1-73-89 or 7326 ** OPEN 7313	22 9	8 7	24 5	26 1	9 6	27 8	19	20	21	22	SCADA Alarm Limits Exceeded, no thermal violation identified in loadflow Field Check Alarm Limits Marginally Low Voltages 0 95 per unit
	Additional Switching for Load Relief						13 West Pond #117	CLOSE T1-926-936 OPEN 926-1 RECLOSER	12 2	0 5	12 2				21	26	27	28	938 and 922 Circuits
							88 Valley #113	CLOSE T1-923-925 CLOSE T1-922-925 OPEN 922-2 RECLOSER OPEN 925-2 RECLOSER	6 7	2 1	7 0				19	20	21	22	

* Pilgrim RSS load in-service
** Pine Hills load on #89 feeder out of Valley #108
*** There is backup available by tying the 72 line through the #940 and #938 circuits as described below
**** Pine Hills load on #89 feeder out of Valley #108 Transformer

Currently, under emergency conditions, the #940 Circuit is connected to the #938 Circuit at pole 46/80 In order to make this connection, existing 40 Amp (40T) fuses are changed to solid disconnect switches As a result of this limitation, it is not feasible to use the connection of these two circuits as a regular tie The Company is required by contract, to provide emergency shutdown/startup power through the 72 Feeder for Pilgrim Nuclear Station Offsite Wheeling Requirements

2004 T&D OPERATING STUDY
Plymouth District

MARSHFIELD SUBSTATION #739

Marshfield Substation #739 serves a power supply area consisting of all or portions of the Towns of Marshfield, Duxbury, and Scituate (Humarock). During the summer of 2003, peak station load coincident with Plymouth District on 8/04/03 18:00 hours was 13.0 MVA.

Marshfield Substation #739 consists of one 115/23.0 kV transformer:

#191: Allis-Chalmers 12/16/20 [22.4] MVA 115/23.0 kV

Overload Ratings:

Transformer	Nameplate	Summer Normal Rating No Loss of Life	Summer 12 Hour LTE Rating 1% Loss of Life
#191	12/16/20 [22.4] MVA	28 MVA	30 MVA

Station Capabilities:

Total Station Capacity (N-0) Normal Ratings	Station Firm Capacity (N-1) LTE Ratings	Load Transfers (MVA)	Total LCC (LTE + Transfers)
28 MVA	0 MVA	17.0 MVA	17.0 MVA

Station Load Forecast:

2004	2005	2006	2007	2008
15.3 MW	15.4 MW	15.5 MW	15.6 MW	15.6 MW

Switching Actions:

Loss of #191 Transformer

Open: Circuit Switcher 19192
Main Circuit Breaker 191B92

Close: Tie Switch #T1-23-24 (transfers entire station to Duxbury #117 transformer)

Distribution Feeder Switching:

For outage of the Marshfield transformer, the Duxbury Substation #738 #117 transformer carries the full station load of 15.3 MW.

The transfers and switching operations for contingency backup of the station's other 23kV DSS lines are shown on the attached table.

Total Transfer: 17.0 MVA

Summary of Concerns: Marshfield Substation #739

Station:

Based on load projections, Marshfield Substation #739 has adequate firm capability through load forecast year 2013 for a contingency outage of the 12/16/20 MVA transformer bank. Please reference power flow diagram **PL-6**.

Transmission:

From a station capacity perspective, a single contingency outage of the #191 115kV line is not problematic at Marshfield Substation #739; loss of this line, a lateral transmission line emanating from Duxbury Substation #738, is identical to the loss of the transformer. A forced outage of both transformers (one at Duxbury, one at Marshfield) for an outage of the #191 line cannot be supported, and load shedding at both stations would be required.

The single-contingency outage performance of the #191 transmission line is discussed further under *Bulk Transmission Facility Outages*.

DSS/Distribution:

Contingency outages of any of the three (3) 23kV DSS lines served by Marshfield Substation #793 are not problematic, and are summarized in the attached table.

4kV Substation and Distribution:

Marshfield Substation #739 feeds three (3) 23/4.16 kV distribution substations: Seaview #729, South River #730, and Brant Rock #710.

The table below summarizes the capacity of these 23/4.16 kV stations versus forecasted Summer peak loads:

4.16 kV Transformer	Normal Rating	2004 Projection	2008 Projection
Seaview	2.5 MVA	**2.2 MVA**	**2.3 MVA**
South River	3.325 MVA	**2.9 MVA**	**3.0 MVA**
Brant Rock	5.00 MVA	**3.9 MVA**	**4.0 MVA**

Proposed Integrated Plan:

No identified capacity concerns or system bulk supply upgrade projects have been identified for the Marshfield Substation #739 power supply area.

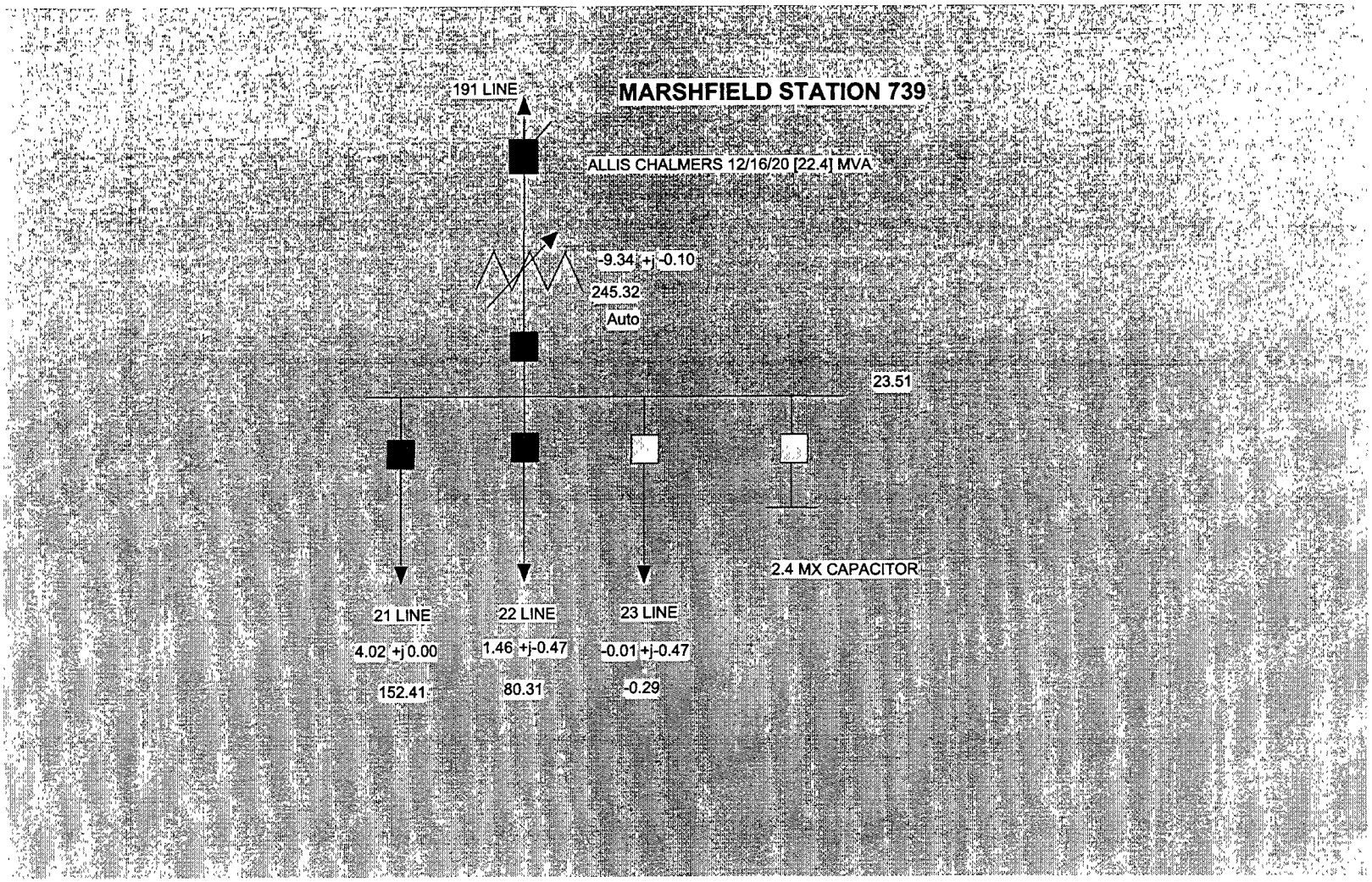
MARSHFIELD STATION 739
191 LINE
ALLIS CHALMERS 12/16/20 [22.4] MVA
-9.34 +j -0.10
245.32
Auto
23.51
2.4 MX CAPACITOR
21 LINE
4.02 +j 0.00
152.41
22 LINE
1.46 +j-0.47
80.31
23 LINE
-0.01 +j-0.47
-0.29

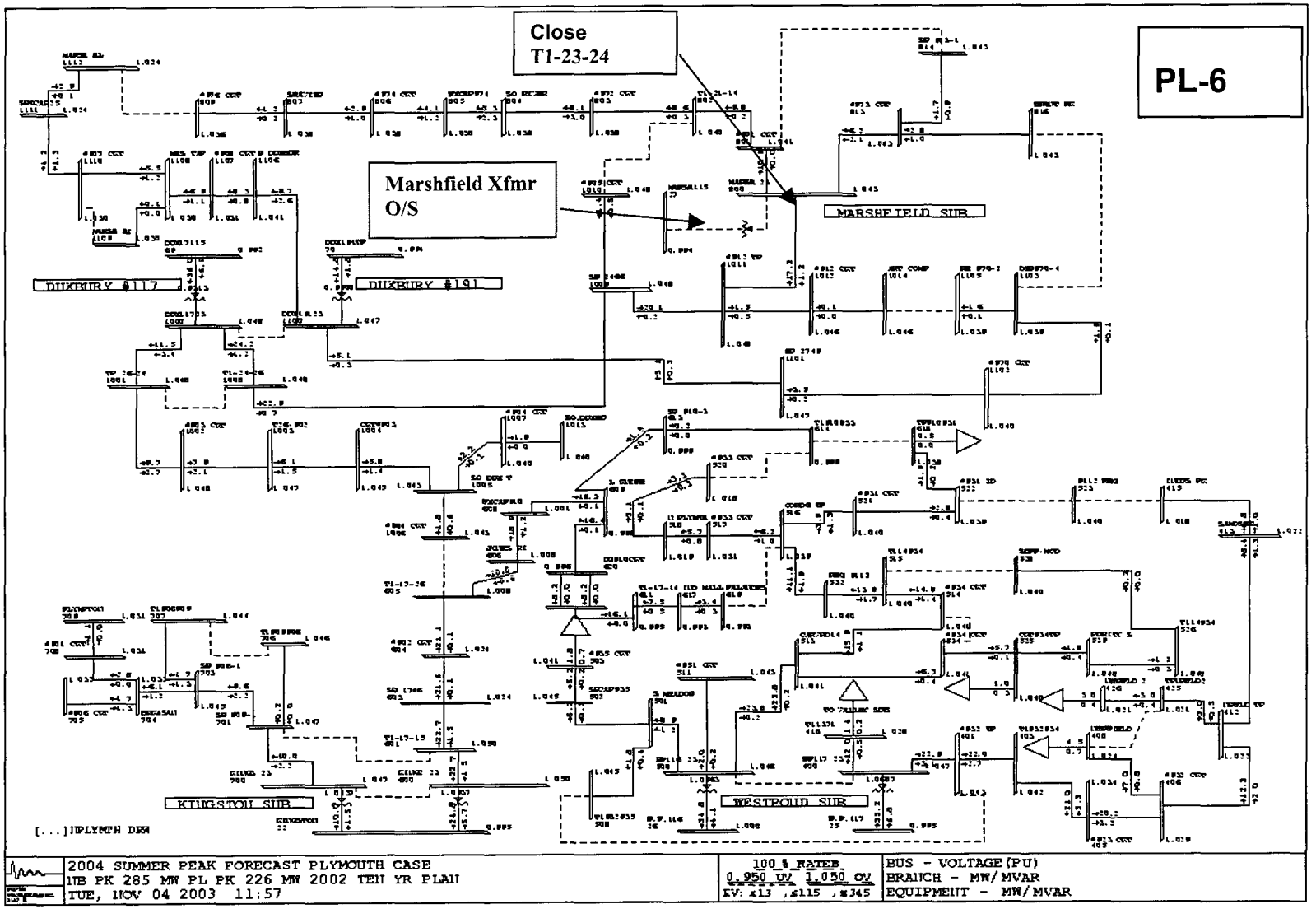
Close
T1-23-24
PL-6
Marshfield Xfmr
O/S
MARSHFIELD SUB
DUXBURY #117
DUXBURY #191
KINGSTON SUB
WESTPOND SUB
2004 SUMMER PEAK FORECAST PLYMOUTH CASE
TUE, NOV 04 2003 11:57
100 % RATED
0.950 UV 1.050 OV
KV: x13 ,x115 ,x345
BUS - VOLTAGE(PU)
EQUIPMENT - MW/MVAR

2003 5/10 Year Plan - Year 2004 DSS Line Load Transfers - Plymouth District

BULK SUBSTATION DSS LINE SINGLE-CONTINGENCY ANALYSIS

* Coincident Feeder peaks at Forecasted Summer 2004 District Peaks
* Switching Sequences and Effects of Load Transfer Under Coincident Peak Conditions

CIRCUIT NUMBER	COINCIDENT PEAK LOAD (MW)	(MX)	(MVA)	NUMBER CUSTOMERS	BACKUP CIRCUIT	BACKUP STATION	SWITCHING ACTIONS	BACKUP CIRCUIT LOAD (BEFORE TRANSFER) (MW)	(MX)	(MVA)	(AFTER TRANSFER) (MW)	(MX)	(MVA)	BACKUP CIRCUIT SCADA LIMITS NORMAL (MVA)	LTE (MVA)	STE (MVA)	TRIP (MVA)	PROBLEM AREAS
Marshfield Substation																		
21	10.9	0.0	10.9	5974		24 Duxbury #117	CLOSE T1-21-24 OPEN 2192	6.9	2.4	7.3	18.0	2.7	18.2	37	43	45	47	
22	6.2	-2.1	6.5	2027		27 Duxbury #191	CLOSE T1-22-27 OPEN 2292	5.1	0.4	5.1	11.6	-1.2	11.7	37	43	45	47	
23*	0.0	0.0	0.0	0		24 Duxbury #117	NONE REQUIRED	0.0	0.0	0.0	0.0	0.0	0.0	37	43	45	47	

* Normally open and served from Duxbury

2004 T&D OPERATING STUDY
Plymouth District

ROCHESTER SUBSTATION #745

Rochester Substation #745 serves a power supply area consisting of all or portions of the Towns of Rochester and Marion. During the summer of 2003, peak station load coincident with Plymouth District on 8/04/03 18:00 hours was 7.1 MVA.

Rochester Substation #745 consists of two 115/13.2 kV transformers:

#112: Wagner 10/12 MVA 115/13.2 kV
#114: Westinghouse 5/7 MVA 115/13.2 kV

Overload Ratings:

Transformer	Nameplate	Summer Normal Rating No Loss of Life	Summer 12 Hour LTE Rating 1% Loss of Life
#112	10/12 MVA	15 MVA	16 MVA
#114	5/7 MVA	6 MVA	8 MVA

Station Capabilities:

Total Station Capacity (N-0) Normal Ratings	Station Firm Capacity (N-1) LTE Ratings	Load Transfers (MVA)	Total LCC (LTE + Transfers)
21 MVA	8 MVA	5.0 MVA	13.0 MVA

Station Load Forecast:

2004	2005	2006	2007	2008
5.3 MW	5.3 MW	5.3 MW	5.3 MW	5.3 MW

Switching Actions:

Loss of #112 Transformer

Open: Circuit Switcher 11252
Main recloser 112B52

Close: Tie Breaker #T-52 (transfers entire station to Rochester #114 transformer)

Loss of #114 Transformer

Open: Circuit Switcher 11452
Main circuit breaker 114B52

Close: Tie Breaker #T-52 (transfers entire station to Rochester #112 transformer)

Distribution Feeder Switching:

For either transformer outage, remaining transformer carries full station load of 5.3 MW.

While not required for loss of either transformer, transfer of the station's 13.2kV distribution supply lines via manual switches may be conducted for additional load reduction. The transfers and switching operations required are shown on the attached table.

Total Transfer: 5.0 MVA

Summary of Concerns: Rochester Substation #745

Station:

Based on load projections, Rochester Substation #745 has adequate firm capability through load forecast year 2013 for a contingency outage of either transformer bank. Please reference power flow diagrams **PL-7** and **PL-8.**

Contingency performance of the smaller Rochester #114 transformer has been identified as deficient for contingency backup of the Crystal Spring #302 13.2kV circuit, as discussed under Crystal Spring Substation #646 in the *New Bedford District*.

Transmission:

From a station capacity perspective, contingency outages of either the #112 or #114 115kV lines is not problematic at Rochester Substation #745. Loss of either 115kV line is identical in performance to loss of the relevant substation transformer.

The transmission system contingency performance of both the #112 and #114 115kV lines is further discussed at *Bulk Transmission Facility Outages*.

DSS/Distribution:

Contingency performance of either the Rochester #702 or #703 13.2kV DSS lines is not problematic through Summer 2013 load levels.

4kV Substation and Distribution:

Rochester Substation #745 does not serve any 4kV class substations. Some limited 4kV stepdown areas are served off the two 13.2kV circuits.

Proposed Integrated Plan:

The suggested actions table listed below will address all of the capacity concerns in the Rochester Substation #745 power supply area.

As discussed for the Crystal Spring Substation #646 in the *New Bedford District*, there is a deficiency at Rochester Substation #745 for contingency backup of the Crystal Spring #302 13.2kV circuit. The contingency backup of the Crystal Spring #302 DSS line from Rochester Substation is problematic due to LTE ratings of transformers and SCADA alarm and trip settings being exceeded. If the #302 circuit must be backed up in this manner at Summer peak conditions (and backing up via T1-301-302 is not possible), the two

transformers at Rochester must be paralleled to share the load. Leaving the system in this configuration for a long period of time would not be recommended.

NSTAR has a spare 10/12 MVA 115/13.2kV substation transformer that is stored at the New Bedford District service center. This unit is stored as a spare solely for the Rochester Substation, which has the smallest (lowest-rated) transformers in the NSTAR System. A remedial project to address the #302 circuit backup issue would be to replace the smaller 5/6 MVA transformer with the spare 10/12 MVA unit.

Recommended course of action for Rochester Substation #745

Action	Year needed	Estimated Cost
⇒ Replace 5/6 MVA transformer at Rochester with 10/12 MVA spare unit	2005	$TDB

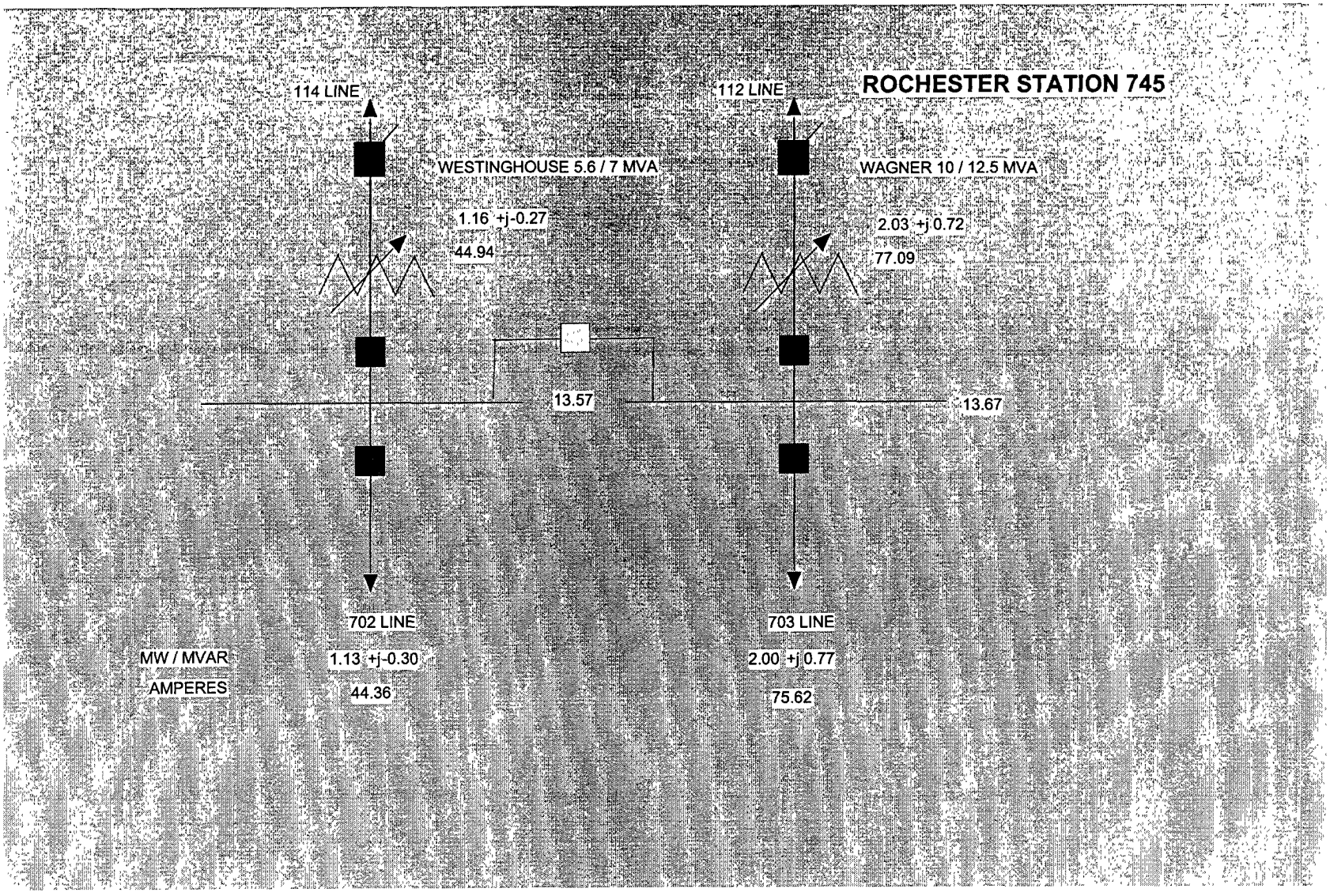
ROCHESTER STATION 745
114 LINE
112 LINE
WESTINGHOUSE 5.6 / 7 MVA
WAGNER 10 / 12.5 MVA
1.16 +j-0.27
44.94
2.03 +j 0.72
77.09
13.57
13.67
702 LINE
703 LINE
MW / MVAR
AMPERES
1.13 +j-0.30
44.36
2.00 +j 0.77
75.62

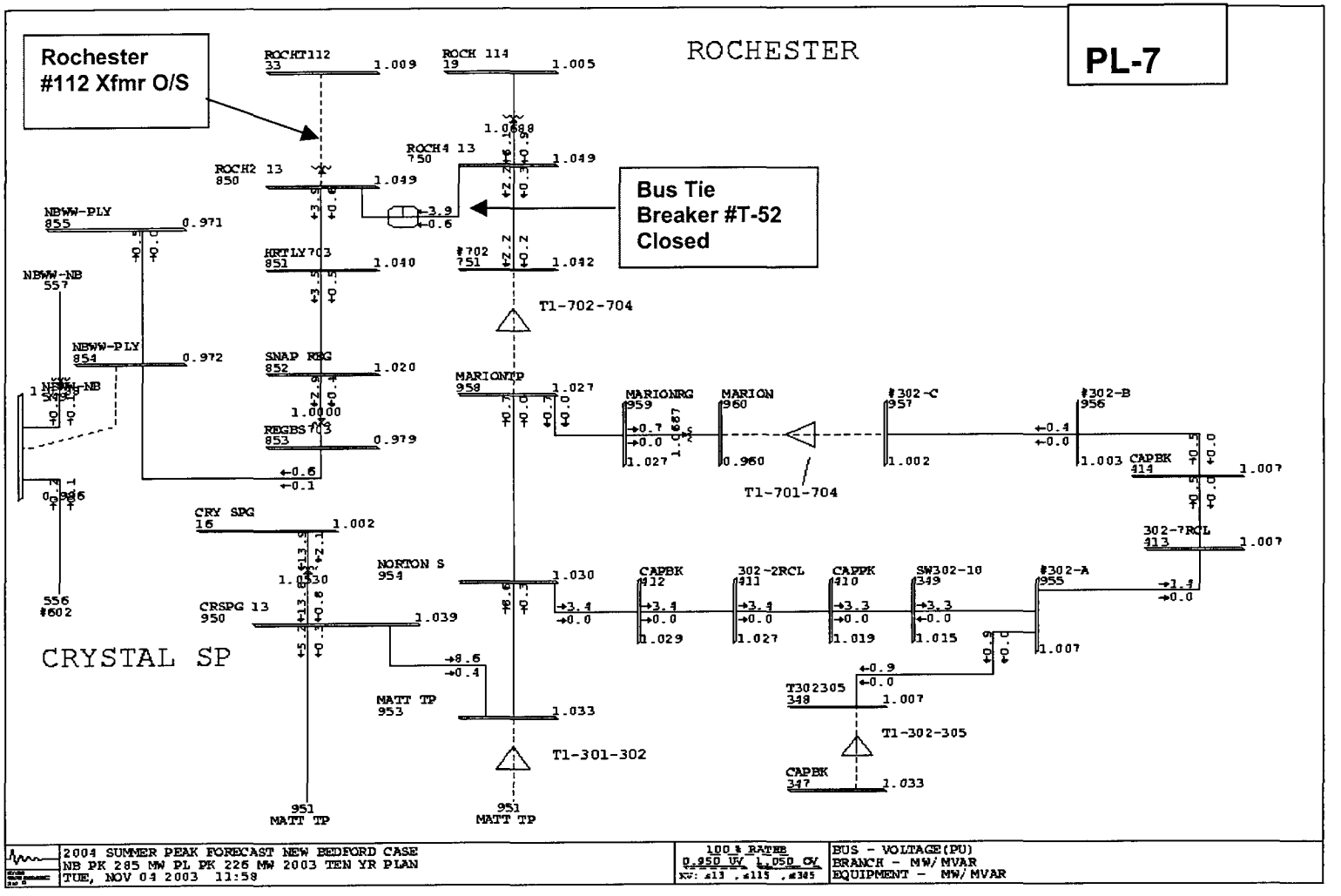
PL-7
ROCHESTER
Rochester #112 Xfmr O/S
Bus Tie Breaker #T-52 Closed
ROCHT112 33 1.009
ROCH 114 19 1.005
ROCH4 13 750 1.049
ROCH2 13 850 1.049
NBWW-PLY 855 0.971
HRTLY703 851 1.040
#702 751 1.042
T1-702-704
NBWW-NB 557
NBWW-PLY 854 0.972
SNAP REG 852 1.020
REGBS703 853 0.979
MARIONTP 958 1.027
MARIONRG 959
MARION 960
#302-C 957
#302-B 956
CAPBK 414 1.007
T1-701-704
CRY SPG 16 1.002
302-7RCL 413 1.007
NORTON S 954 1.030
CAPBK 412
302-2RCL 411
CAPBK 410
SW302-10 349
#302-A 955
CRSPG 13 950 1.039
556 #602
CRYSTAL SP
MATT TP 953 1.033
T1-301-302
T302305 348 1.007
T1-302-305
CAPBK 347 1.033
951 MATT TP
951 MATT TP
2004 SUMMER PEAK FORECAST NEW BEDFORD CASE
NB PK 285 MW PL PK 226 MW 2003 TEN YR PLAN
TUE, NOV 04 2003 11:58
100 % RATEB
0.950 UV 1.050 OV
BUS - VOLTAGE(PU)
BRANCH - MW/MVAR
EQUIPMENT - MW/MVAR

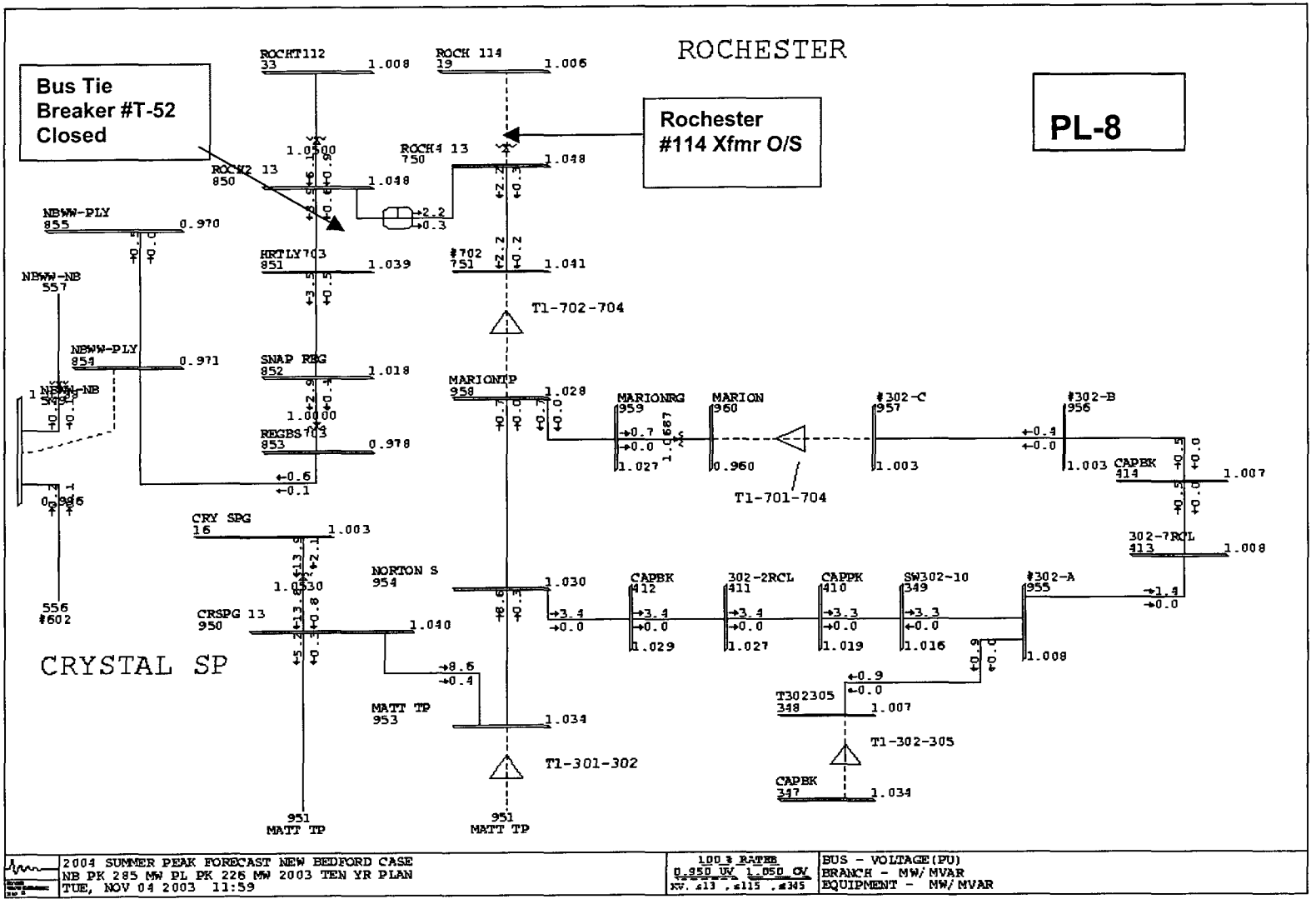
ROCHESTER
PL-8
Bus Tie Breaker #T-52 Closed
Rochester #114 Xfmr O/S
ROCHT112 33 1.008
ROCH 114 19 1.006
ROCH2 13 850 1.048
ROCH4 13 750 1.048
NBWW-PLY 855 0.970
NBWW-NB 557
HRTLY703 851 1.039
#702 751 1.041
T1-702-704
NBWW-PLY 854 0.971
SNAP REG 852 1.018
REGBS703 853 0.978
MARIONTP 958 1.028
MARIONRG 959
MARION 960
#302-C 957
#302-B 956
CAPBK 414 1.007
T1-701-704
CRY SPG 16 1.003
302-7RCL 413 1.008
NORTON S 954 1.030
CAPBK 412
302-2RCL 411
CAPPK 410
SW302-10 349
#302-A 955
556 #602
CRSPG 13 950 1.040
CRYSTAL SP
MATT TP 953 1.034
T302305 348 1.007
T1-302-305
T1-301-302
CAPBK 347 1.034
951 MATT TP
951 MATT TP
2004 SUMMER PEAK FORECAST NEW BEDFORD CASE
NB PK 285 MW PL PK 226 MW 2003 TEN YR PLAN
TUE, NOV 04 2003 11:59
100% RATEB
0.950 UV 1.050 OV
BUS - VOLTAGE(PU)
BRANCH - MW/MVAR
EQUIPMENT - MW/MVAR

2003 5/10 Year Plan - Year 2004 DSS Line Load Transfers - Plymouth District

BULK SUBSTATION DSS LINE SINGLE-CONTINGENCY ANALYSIS

* Coincident Feeder peaks at Forecasted Summer 2004 District Peaks
* Switching Sequences and Effects of Load Transfer Under Coincident Peak Conditions

CIRCUIT NUMBER	COINCIDENT PEAK LOAD (MW)	(MX)	(MVA)	NUMBER CUSTOMERS	BACKUP CIRCUIT	BACKUP STATION	SWITCHING ACTIONS	BACKUP CIRCUIT LOAD (BEFORE TRANSFER) (MW)	(MX)	(MVA)	(AFTER TRANSFER) (MW)	(MX)	(MVA)	BACKUP CIRCUIT SCADA LIMITS NORMAL (MVA)	LTE (MVA)	STE (MVA)	TRIP (MVA)	PROBLEM AREAS
Rochester Substation																		
702	2.2	0.3	2.2	848	703	Rochester	* CLOSE T2-702-703 OPEN 70252	3.9	0.9	4.0	6.1	0.9	6.2	9	10	10	11	
				OR	302	Crystal Spring	CLOSE T1-702-704 OPEN 70252	8.6	0.6	8.6	10.9	0.9	10.9	12	12.3	13	13	
703	3.9	0.6	3.9	885	702	Rochester	* CLOSE T2-702-703 OPEN 70352	2.2	0.3	2.2	6.1	0.9	6.2	9	10	10	11	

* Prior to closing this tie switch, an 1800 kvar switched capacitor bank on pole 184/2 on the 703 circuit (near the sub) must be opened.

2004 T&D OPERATING STUDY
Plymouth District

TREMONT SUBSTATION #713

Tremont Substation #713 serves a power supply area consisting of all or portions of the Towns of Carver, Rochester, and Wareham. During the summer of 2003, peak station load coincident with Plymouth District on 8/04/03 18:00 hours was 11.6 MVA.

Tremont Substation #713 consists of two 115/23.0 kV transformer banks:

#113: General Electric 12 MVA* 115/23.0 kV
#114: General Electric 12 MVA* 115/23.0 kV

** These units are comprised of banks of three (3) single-phase 4 MVA transformers*

Overload Ratings:

Transformer	Nameplate	Summer Normal Rating No Loss of Life	Summer 12 Hour LTE Rating 1% Loss of Life
#113	12 MVA	12 MVA	12 MVA
#114	12 MVA	12 MVA	12 MVA

Station Capabilities:

Total Station Capacity (N-0) Normal Ratings	Station Firm Capacity (N-1) LTE Ratings	Load Transfers (MVA)	Total LCC (LTE + Transfers)
24 MVA	12 MVA	4.0 MVA	16.0 MVA

Station Load Forecast:

2004	2005	2006	2007	2008
11.7 MW	12.1 MW	12.5 MW	12.9 MW	13.3 MW

Switching Actions:

Loss of #113 Transformer

Open: Circuit Switcher B11332
Main circuit breaker 113B32

Close: Feeder Breaker #8332 (transfers Tremont #113 bus to Wareham Substation via the #83 DSS feeder).

Notice: ***Do not close*** bus tie breaker #T1-32. You will overload the #114 transformer. Transfer the #113 23kV bus to Wareham Substation #714, as shown.

Loss of #114 Transformer

Open: Circuit Switcher B11432
Main circuit breaker 114B32
Feeder Breaker #8132

Close: Tremont bus tie breaker #T1-32.
Tie Switch #T1-11-81 on Tremont Road, Carver

Notice: Transfer the #81 line to the West Pond #11 line ***before*** closing bus tie breaker #T1-32. Otherwise, you will overload the #113 transformer.

Distribution Feeder Switching:

For either transformer outage, remaining Tremont transformer and transformers at adjacent stations (Wareham #714 or West Pond #737) carry full station load of 11.7 MW.

As shown, transfer of at least one (1) of the station's three (3) 23kV distribution supply lines via manual switches must be conducted for additional load reduction, before the station 23kV bus tie breaker is closed. The transfers and switching operations required are shown on the attached table.

Total Transfer: 4.0 MVA

Summary of Concerns: Tremont Substation #713

Station:

Based on load projections, Tremont Substation #713 has adequate firm capability through load forecast year 2008 for a contingency outage of either transformer bank. Please reference power flow diagrams **PL-9** through **PL-11**.

Do to high growth in the Tremont-Wareham-Valley power supply area due to the A. D. Makepeace development project, system upgrades may be required in the 2005-2008 time frame at the Valley #715 and Tremont #713 Substations. A "small area supply study" is currently in progress to identify infrastructure upgrade projects to support load growth attributable to the A. D. Makepeace development project. For the study conducted herein, minimum growth of 7.5 MW over ten years was assumed.

With this growth assumption, upgrade of one (1) of the 12 MVA transformers to at least a 12/16/20 MVA rated unit will be required by Summer 2008. Due to the fact that one (1) 12/16/20 MVA transformer at Valley Substation #715 becomes limiting due to the load growth associated with the A. D. Makepeace development, the upgrade of the Valley transformer to a higher-rated unit will free up the 12/16/20 MVA bank for use at Tremont at minimal cost.

Transmission:

From a station capacity perspective, contingency outages of either the #113 or #114 115kV lines are not problematic at Tremont Substation #713; the presence of a 115kV transfer bus at Tremont Switching Station prevents the loss of a transformer

The transmission performance of single-contingency outages of all 115kV lines at Tremont Switching Station (#108, #113, #112, #114, and #128) are discussed further under *Bulk Transmission Facility Outages*.

DSS/Distribution:

1. At Summer peak conditions, Tremont Substation #713 #85 line can be transferred to the Wareham #84 line using the switching shown in the Table. Post contingency, Wareham #84 load may be 34.3 MVA, 32% over existing 27 MVA SCADA LTE limit and 28 MVA trip settings. The #84 DSS line has been upgraded to 795 ACSR conductor, capable of 49 MVA LTE rating. The SCADA alarm and trip settings should be updated accordingly.

The two (2) other 23kV DSS lines, #81 and #83, are not limited from a thermal or voltage standpoint, and their load transfer performance is summarized in the attached Table.

4kV Substation and Distribution:

Tremont Substation #713 feeds three (3) 23/4.16 kV distribution substations: Squirrel Island #752, East Marion #724, and Swift's Beach #753.

The table below summarizes the capacity of these 23/4.16 kV stations versus forecasted Summer peak loads:

4.16 kV Transformer	Normal Rating	2004 Projection	2008 Projection
Squirrel Island	1.50 MVA	**1.0 MVA**	**1.1 MVA**
East Marion	2.00 MVA	**1.6 MVA**	**1.7 MVA**
Swift's Beach	1.50 MVA	**1.7 MVA**	**1.7 MVA**

Proposed Integrated Plan:

The suggested actions table listed below will address all of the capacity concerns in the Tremont Substation #713 power supply area.

The contingency backup of the Tremont #85 line by the Wareham #84 line will result in the existing SCADA alarm limits and trip setting being exceeded. The #84 line was recently upgraded to 795 ACSR conductor capable of 49 MVA LTE rating, fed by a 1200 Ampere breaker at Wareham Substation. The SCADA alarm limits for the #84 line should be increased to at least 49 MVA with a higher trip setting.

The upgrade of the Tremont #113 12 MVA transformer will be required by Summer 2008 to at least a 12/16/20 MVA unit, assuming upgrade of the Valley Substation #715 12/16/20 MVA transformer to a higher-rated unit by Summer 2005, freeing up this unit for use at Tremont. Cost estimate to be determined once the Makepeace small area supply study is completed.

Recommended course of action for Tremont Substation #713

Action	Year needed	Estimated Cost
⇒ Reset SCADA Alarm limits on Wareham #84 Circuit to 49 MVA LTE rating	2004	$0
⇒ Upgrade Tremont #113 12 MVA transformer to 12/16/20 MVA using Valley GE	2008	$TBD

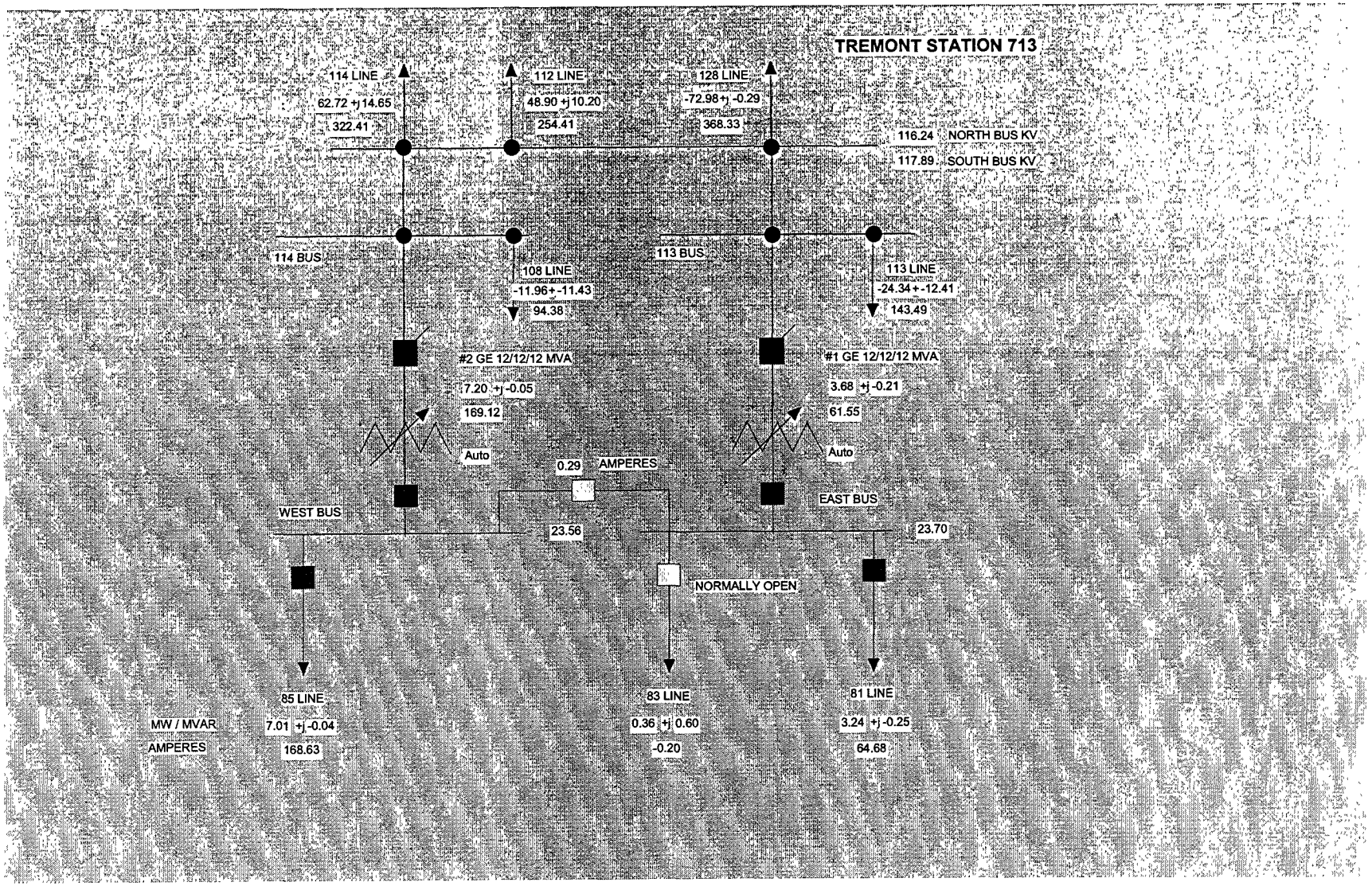
TREMONT STATION 713
114 LINE
62.72 +j 14.65
322.41
112 LINE
48.90 +j 10.20
254.41
128 LINE
-72.98+j -0.29
368.33
116.24 NORTH BUS KV
117.89 SOUTH BUS KV
114 BUS
108 LINE
-11.96+-11.43
94.38
113 BUS
113 LINE
-24.34+-12.41
143.49
#2 GE 12/12/12 MVA
7.20 +j -0.05
169.12
Auto
#1 GE 12/12/12 MVA
3.68 +j -0.21
61.55
Auto
0.29 AMPERES
WEST BUS
23.56
EAST BUS
23.70
NORMALLY OPEN
85 LINE
7.01 +j -0.04
168.63
83 LINE
0.36 +j 0.60
-0.20
81 LINE
3.24 +j -0.25
64.68
MW / MVAR
AMPERES

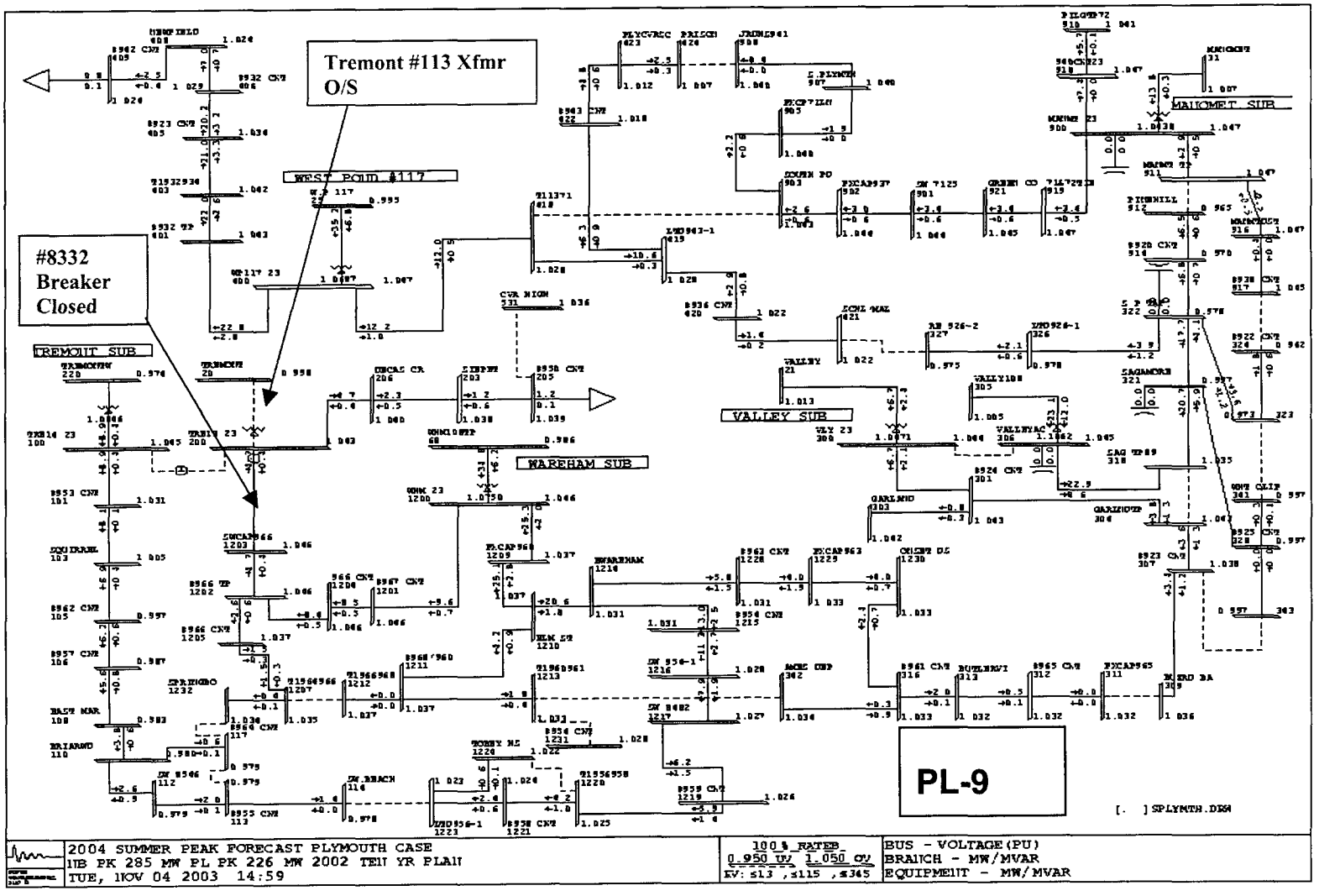
Tremont #113 Xfmr O/S
#8332 Breaker Closed
WEST POND #117
TREMONT SUB
WAREHAM SUB
VALLEY SUB
MALCOMET SUB
PL-9
2004 SUMMER PEAK FORECAST PLYMOUTH CASE
HB PK 285 MW PL PK 226 MW 2002 TEN YR PLAN
TUE, NOV 04 2003 14:59
100% RATED
0.950 UV 1.050 OV
KV: ≤13 , ≤115 , ≤345
BUS - VOLTAGE(PU)
BRANCH - MW/MVAR
EQUIPMENT - MW/MVAR
[.] SPLYMTH.DSW

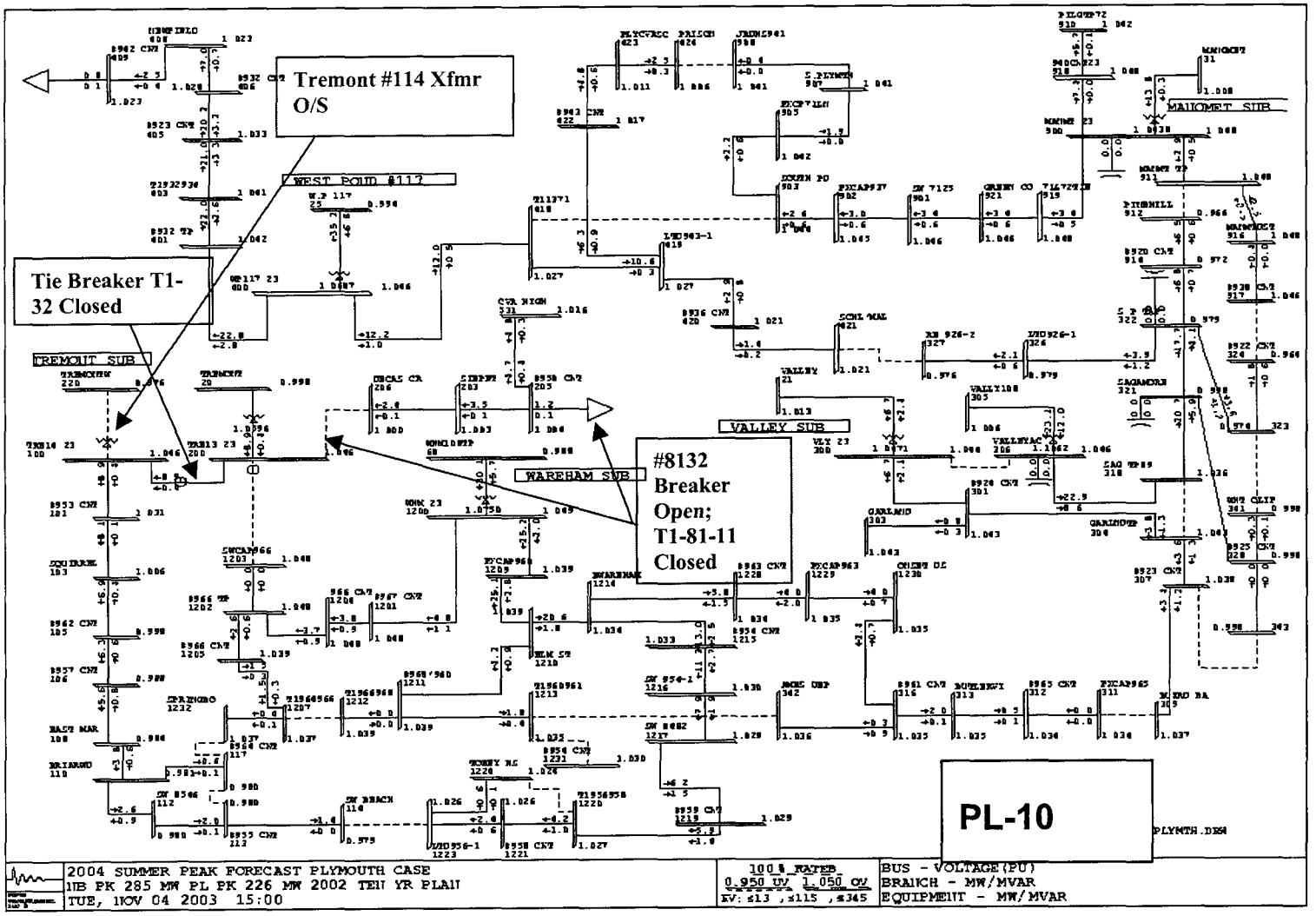
Tremont #114 Xfmr O/S
Tie Breaker T1-32 Closed
#8132 Breaker Open; T1-81-11 Closed
WEST POND #117
TREMONT SUB
WAREHAM SUB
VALLEY SUB
MALIOMET SUB
PL-10
2004 SUMMER PEAK FORECAST PLYMOUTH CASE
TUE, NOV 04 2003 15:00
BUS - VOLTAGE(PU)
BRANCH - MW/MVAR
EQUIPMENT - MW/MVAR

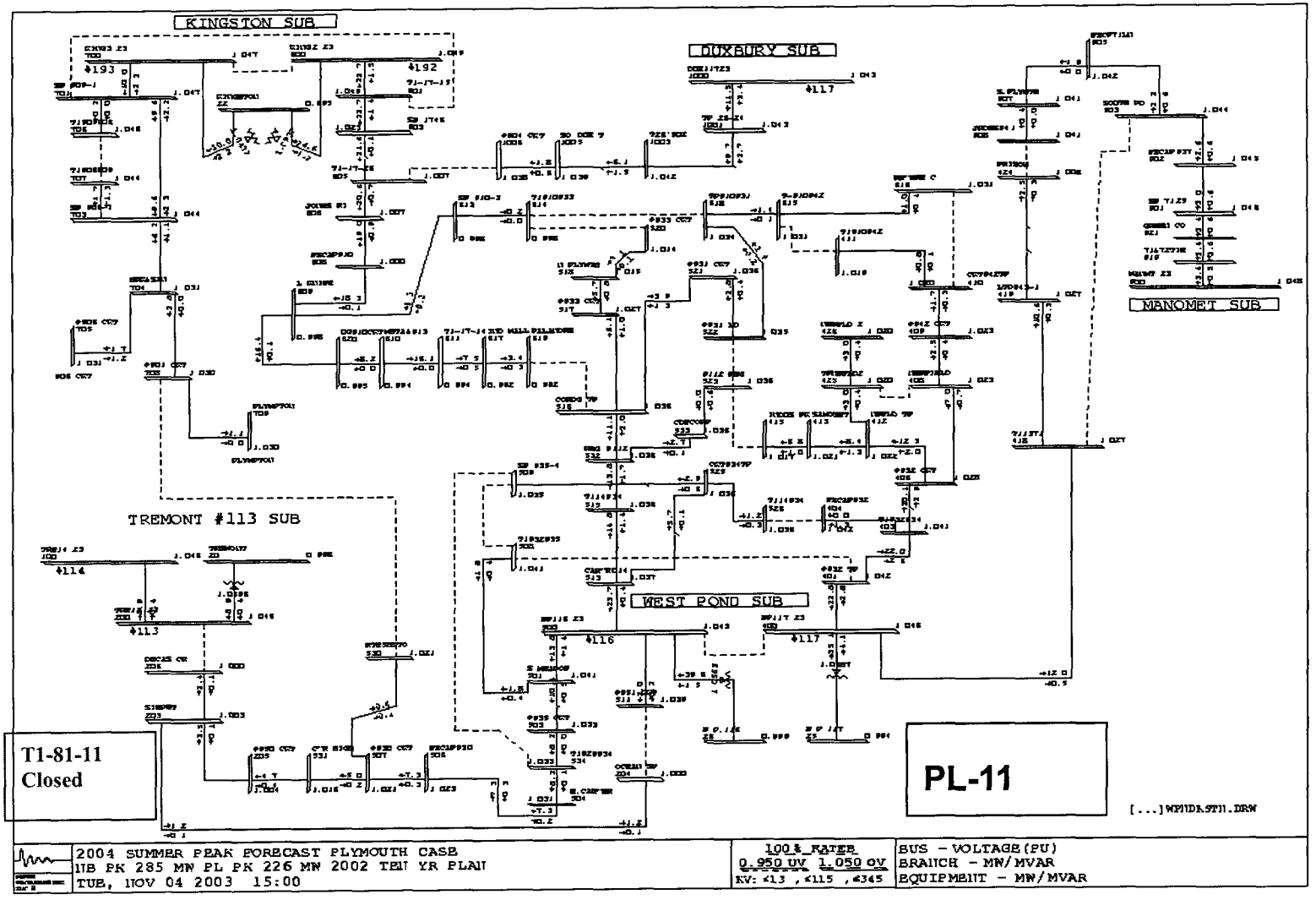
KINGSTON SUB
DUXBURY SUB
MANOMET SUB
TREMONT #113 SUB
WEST POND SUB
T1-81-11
Closed
PL-11
2004 SUMMER PEAK FORECAST PLYMOUTH CASE
HB PK 285 MW PL PK 226 MW 2002 TEN YR PLAN
TUE, NOV 04 2003 15:00
100% RATES
0.950 UV 1.050 OV
KV: <13 , <115 , <345
BUS - VOLTAGE(PU)
BRANCH - MW/MVAR
EQUIPMENT - MW/MVAR

2003 5/10 Year Plan - Year 2004 DSS Line Load Transfers - Plymouth District

BULK SUBSTATION DSS LINE SINGLE-CONTINGENCY ANALYSIS

* Coincident Feeder peaks at Forecasted Summer 2004 District Peaks
* Switching Sequences and Effects of Load Transfer Under Coincident Peak Conditions

CIRCUIT NUMBER	COINCIDENT PEAK LOAD (MW)	(MX)	(MVA)	NUMBER CUSTOMERS	BACKUP CIRCUIT	BACKUP STATION	SWITCHING ACTIONS	BACKUP CIRCUIT LOAD (BEFORE TRANSFER) (MW)	(MX)	(MVA)	(AFTER TRANSFER) (MW)	(MX)	(MVA)	BACKUP CIRCUIT SCADA LIMITS NORMAL (MVA)	LTE (MVA)	STE (MVA)	TRIP (MVA)	PROBLEM AREAS
Tremont Substation																		
81	4.7	-0.7	4.8	1751	11	W Pond 116	CLOSE T1-11-81 OPEN 8132	2.0	0.2	2.0	6.9	0.3	6.9	12.4	16	17	32	
85	8.9	0.4	8.9	4487	84	Wareham	CLOSE T1-84-85 * OPEN 8632	25.3	2.0	25.4	34.1	3.5	34.3	21	26	27	28	Update SCADA Limits upon completion of #84 DSS Line Reconductor Project

* Tobey Hospital, Wareham, will not have an alternate feed during this tied condition

2004 T&D OPERATING STUDY
Plymouth District

VALLEY SUBSTATION #715

Valley Substation #715 serves a power supply area consisting of all or portions of the Towns of Plymouth and Wareham (including: Buzzards Bay, Sagamore, Onset, Buttermilk Bay, and E. Wareham). During the summer of 2003, peak station load coincident with Plymouth District on 8/04/03 18:00 hours was 21.7 MVA.

Valley Substation #715 consists of two 115/23.0 kV transformers:

#108: Allis-Chalmers 15/20/25 [28] MVA 115/23.0 kV
#113: General Electric 12/16/20 [22.4] MVA 115/23.0 kV

Overload Ratings:

Transformer	Nameplate	Summer Normal Rating No Loss of Life	Summer 12 Hour LTE Rating 1% Loss of Life
#108	15/20/25 [28] MVA	34 MVA	40 MVA
#113	12/16/20 [22.4] MVA	28 MVA	30 MVA

Station Capabilities:

Total Station Capacity (N-0) Normal Ratings	Station Firm Capacity (N-1) LTE Ratings	Load Transfers (MVA)	Total LCC (LTE + Transfers)
62 MVA	40 MVA	15.0 MVA	55.0 MVA

Station Load Forecast: *

2004	2005	2006	2007	2008
19.9 MW	20.3 MW	20.8 MW	21.2 MW	21.3 MW

**From 2004-2008, load associated with Pine Hills is transferred to Manomet as a means of deferral of system upgrades. The load forecast for Valley would be higher if this transfer was not in effect*

**The load forecast incorporates minimum growth of 7.5 MW over ten years for A. D. Makepeace development.*

Switching Actions:

Loss of #108 Transformer

Open: Circuit Switcher 10852
Main Circuit Breaker 108B52

Close: Temporary Bus Tie Breaker #8952A (old #89 line feeder breaker).

Note: Bus Tie Breaker #T52 is not yet in service

Loss of #113 Transformer

Open: Circuit Switcher 11352
Main Circuit Breaker 113B52

Close: Temporary Bus Tie Breaker #8952A (old #89 line feeder breaker).

Note: Bus Tie Breaker #T52 is not yet in service

Distribution Feeder Switching:

For either transformer outage, remaining transformer carries full station load of 19.9 MW.

While not required for loss of either transformer, transfer of the station's 23kV distribution supply lines via manual switches may be conducted for additional load reduction. The transfers and switching operations required are shown on the attached table.

Total Transfer: 15.0 MVA

Summary of Concerns: Valley Substation #715

Station:

Based on load projections, Valley Substation #715 has adequate firm capability through load forecast year 2005 for a contingency outage of either transformer bank. Please reference power flow diagrams **PL-12**and **PL-13.**

Due to high growth in the Tremont-Wareham-Valley power supply area due to the A. D. Makepeace development project, system upgrades may be required in the 2005-2008 time frame at the Valley #715 and Tremont #713 Substations. A "small area supply study" is currently in progress to identify infrastructure upgrade projects to support load growth attributable to the A. D. Makepeace development project. For the study conducted herein, minimum growth of 7.5 MW over ten years was assumed.

With this growth assumption, upgrade of the Valley #113 GE 12/16/20 MVA transformer to at least a 16/21/26 MVA rated unit will be required by Summer 2005. Due to the fact that the 16/21/26 MVA transformer at *Cape & Vineyard District's* Otis Substation #915 becomes limiting due to natural forecasted load growth in the same time frame, if this station is upgraded to a new 30/40/50 MVA transformer, this would free up the 16/21/26 MVA unit for use at Valley Substation #715 in the Plymouth District at minimal cost. *A priori,* the 12/16/20 MVA unit that is replaced at Valley could then be displaced for use at Tremont Substation #713 to replace the limiting 12 MVA transformer by Summer 2008

Transmission:

From a station capacity perspective, contingency outages of either the #108 or #113 115kV lines is not problematic at Valley Substation #715. Loss of a 115kV line is identical to loss of the connected 115/23kV substation transformer from a distribution supply standpoint.

Loss of the #113 line, if it also affects Wareham Substation #715, which would result in the outage of two (2) 23kV transformer banks, may require load shedding. Loss of the #108 line, if it also affects Manomet Substation #721, would result in the outage of two (2) 23kV transformer banks, would likewise require load shedding. Both 115kV line outages are discussed further under the #108 and #113 line outages at *Bulk Transmission Facility Outages*.

DSS/Distribution:

1. At Summer peak conditions, the Valley Substation #715 #88 line can be transferred to the Wareham #84 line using the switching shown in the Table. Post contingency, Wareham #84 load may be 32.6 MVA, 21% over existing 27 MVA SCADA LTE limit and 28 MVA trip settings. The #84 DSS line has been upgraded to 795 ACSR conductor, capable of 49 MVA LTE rating. The SCADA alarm and trip settings should be updated accordingly.

The other 23kV DSS line, #89, is not limited from a thermal or voltage standpoint, and the load transfer performance is summarized in the attached Table.

4kV Substation and Distribution:

Valley Substation #715 feeds three (3) 23/4.16 kV distribution substations: Garland Substation #733, Butlerville Substation #750, and Buzzards Bay Substation #712.

The table below summarizes the capacity of these 23.0/4.16 kV stations versus forecasted Summer peak loads:

4.16 kV Transformer	Normal Rating	2004 Projection	2008 Projection
Garland	1.50 MVA	**1.7 MVA**	**1.8 MVA**
Butlerville	2.5 MVA	**2.0 MVA**	**2.3 MVA**
Buzzards Bay	3.325 MVA	**3.2 MVA**	3.4 MVA

Proposed Integrated Plan:

The suggested actions table listed below will address all of the capacity concerns in the Valley Substation #715 power supply area.

The contingency backup of the Valley #88 line by the Wareham #84 line will result in the existing SCADA alarm limits and trip setting being exceeded. The #84 line was recently upgraded to 795 ACSR conductor capable of 49 MVA LTE rating, fed by a 1200 Ampere breaker at Wareham Substation. The SCADA alarm limits for the #84 line should be increased to at least 49 MVA with a higher trip setting.

The upgrade of the Valley #113 12/16/20 MVA transformer will be required by Summer 2005 to at least a 16/21/26 MVA unit, assuming upgrade of the Cape District's Otis Substation #915 16/21/26 MVA transformer to a higher-rated unit by Summer 2005, freeing up this unit for use at Valley. Cost estimate to be determined once the Makepeace small area supply study is completed.

Marginal all-facilities-in overloads beyond top nameplate rating of the transformer at the Buzzards Bay 23/4.16kV distribution substation can be addressed by the addition of thermostatically-controlled fans to increase the top nameplate ratings of those transformer by about 33%. This is estimated at $12k per installation.

Recommended course of action for Valley Substation #715

Action	Year needed	Estimated Cost
⇒ Reset SCADA Alarm limits on Wareham #84 Circuit to 49 MVA LTE rating	2004	$0
⇒ Upgrade Valley #113 12/16/20 MVA transformer to 16/21/26 MVA using Otis unit	2008	$TBD
⇒ Install fans on Buzzards Bay Substation #712 transformer to increase rating	2008	$12K

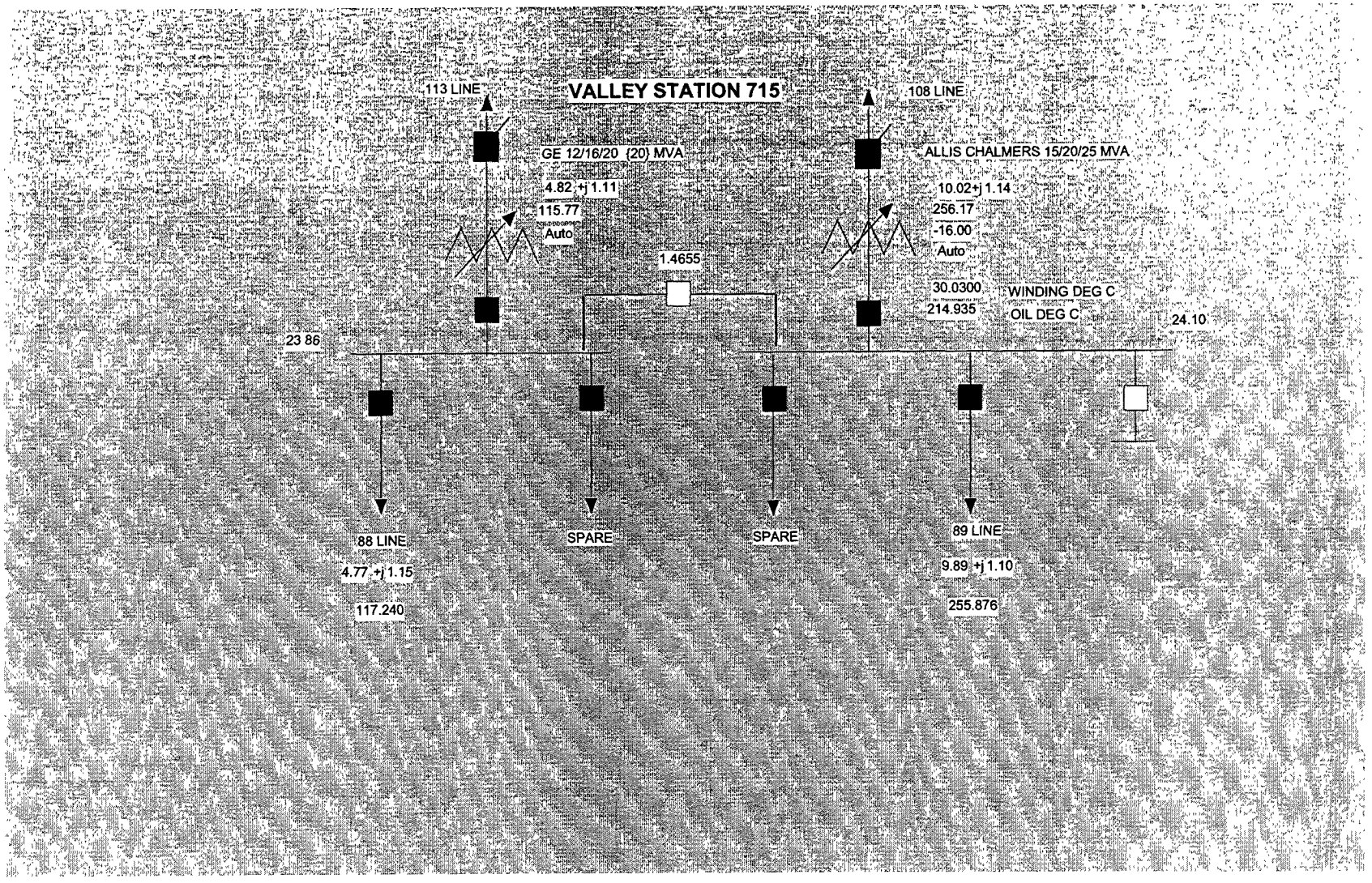
VALLEY STATION 715
113 LINE
GE 12/16/20 {20} MVA
4.82 +j 1.11
115.77
Auto
108 LINE
ALLIS CHALMERS 15/20/25 MVA
10.02+j 1.14
256.17
-16.00
Auto
1.4655
30.0300
214.935
WINDING DEG C
OIL DEG C
24.10
23 86
88 LINE
4.77 +j 1.15
117.240
SPARE
SPARE
89 LINE
9.89 +j 1.10
255.876

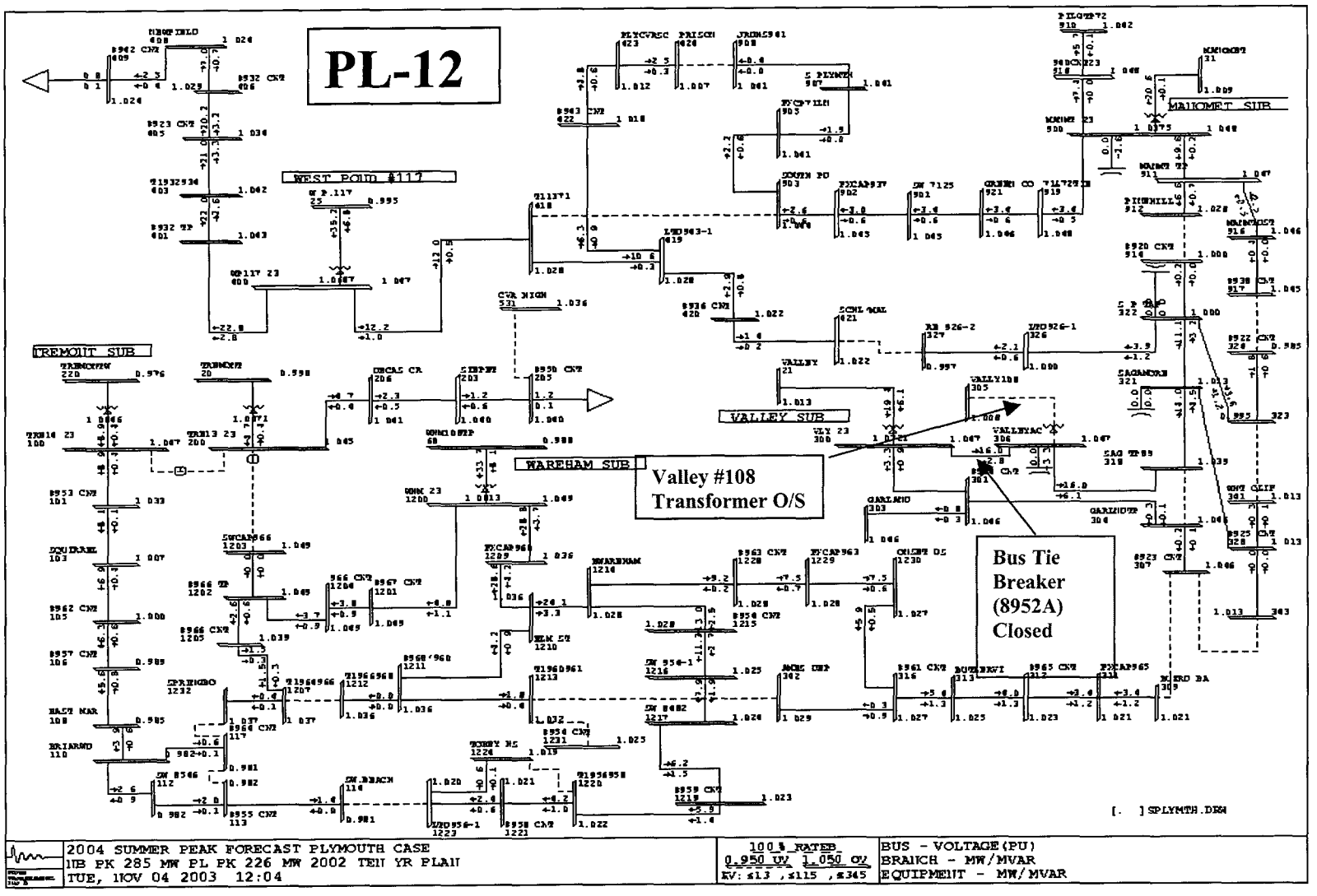
PL-12
WEST POND #117
TREMONT SUB
WAREHAM SUB
VALLEY SUB
MAIDMET SUB
Valley #108
Transformer O/S
Bus Tie
Breaker
(8952A)
Closed
2004 SUMMER PEAK FORECAST PLYMOUTH CASE
HB PK 285 MW PL PK 226 MW 2002 TEN YR PLAN
TUE, NOV 04 2003 12:04
100% RATED
0.950 UV 1.050 OV
KV: ≤13 , ≤115 , ≤345
BUS - VOLTAGE(PU)
BRANCH - MW/MVAR
EQUIPMENT - MW/MVAR
[.] SPLYMTH.DRW

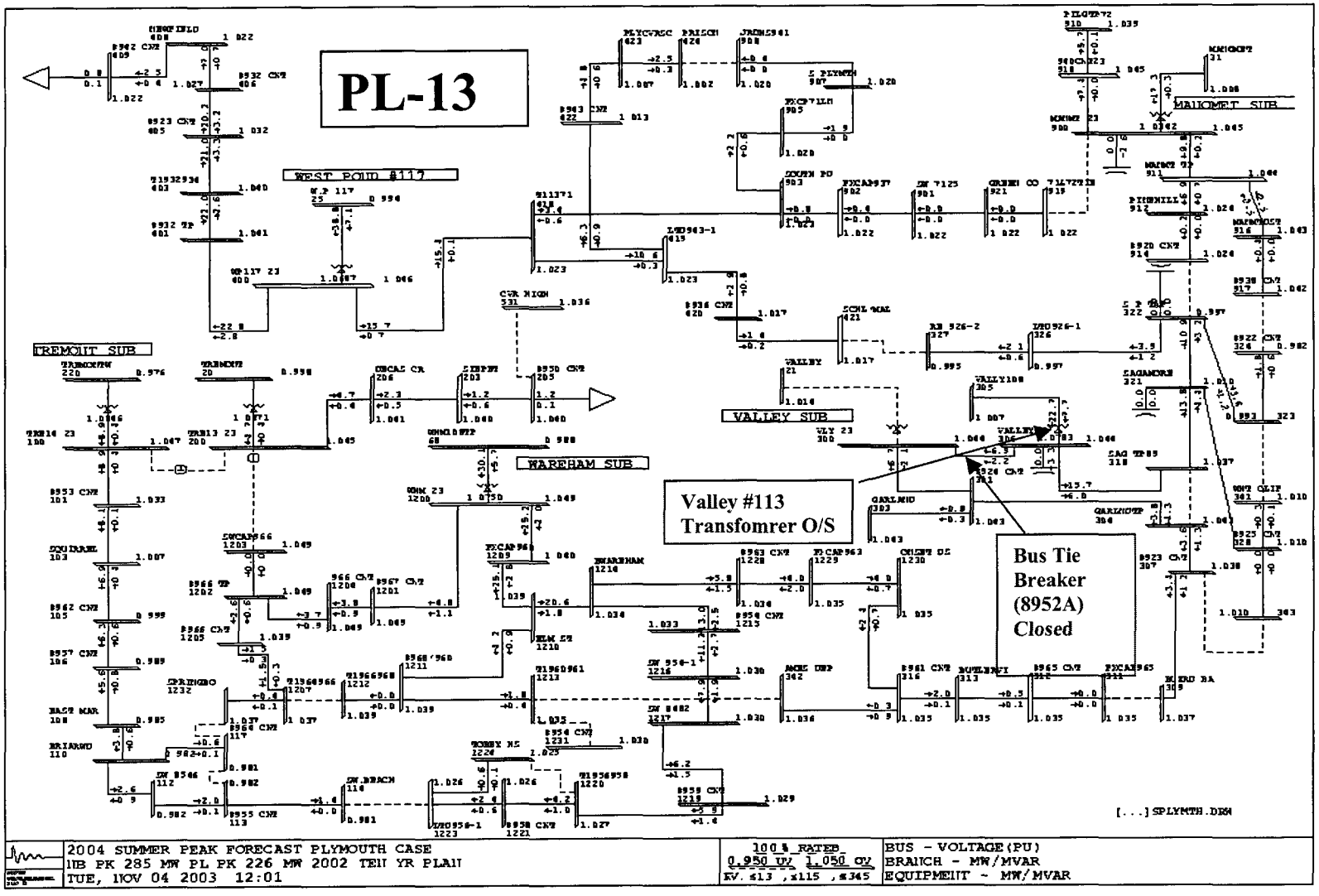
PL-13
WEST POND #117
TREMONT SUB
WAREHAM SUB
VALLEY SUB
MAKONET SUB
Valley #113
Transfomrer O/S
Bus Tie
Breaker
(8952A)
Closed
[...] SPLYMTH.DEN
2004 SUMMER PEAK FORECAST PLYMOUTH CASE
HB PK 285 MW PL PK 226 MW 2002 TEN YR PLAN
TUE, NOV 04 2003 12:01
100% RATED
0.950 UV 1.050 OV
KV. ≤13 ,≥115 ,≤345
BUS - VOLTAGE(PU)
BRANCH - MW/MVAR
EQUIPMENT - MW/MVAR

2003 5/10 Year Plan - Year 2004 DSS Line Load Transfers - Plymouth District

BULK SUBSTATION DSS LINE SINGLE-CONTINGENCY ANALYSIS

* Coincident Feeder peaks at Forecasted Summer 2004 District Peaks
* Switching Sequences and Effects of Load Transfer Under Coincident Peak Conditions

CIRCUIT NUMBER	COINCIDENT PEAK LOAD (MW)	(MX)	(MVA)	NUMBER CUSTOMERS	BACKUP CIRCUIT	BACKUP STATION	SWITCHING ACTIONS	BACKUP CIRCUIT LOAD (BEFORE TRANSFER) (MW)	(MX)	(MVA)	(AFTER TRANSFER) (MW)	(MX)	(MVA)	BACKUP CIRCUIT SCADA LIMITS NORMAL (MVA)	LTE (MVA)	STE (MVA)	TRIP (MVA)	PROBLEM AREAS
Valley Substation																		
88	6.7	2.1	7.0	5861	84	Wareham	CLOSE T1-84-88 OPEN 8852	25.3	2.0	25.4	32.2	5.4	32.6	21	26	27	28	Update SCADA Limits upon completion of #84 DSS Line Reconductor Project
89	22.9	8.7	24.5	6638	73	Manomet	CLOSE T1-73-89 or 7326 * OPEN 8952	2.9	0.5	2.9	16.1	2.5	16.3	24	26	27	24	
				AND	13	W Pond 117	CLOSE T1-13-71 OPEN 7112 CLOSE T1-926-936 OPEN RECL 926-2	12.2	1.0	12.2	20.0	2.8	20.2	21	26	27	28	
				AND	88	Valley #113	CLOSE T1-923-925 CLOSE T1-922-925 OPEN RECL 922-2 OPEN RECL 925-2	6.7	2.1	7.0	12.6	4.6	13.4	19	20	21	22	

2004 T&D OPERATING STUDY
Plymouth District

WAREHAM SUBSTATION #714

Wareham Substation #714 serves a power supply area consisting of portions of the Town of Wareham (including: Onset, E. Wareham, Tempest Knob, and W. Wareham). During the summer of 2003, peak station load coincident with Plymouth District on 8/04/03 18:00 hours was 24.8 MVA.

Wareham Substation #714 consists of one 115/23.0 kV transformer:

#108: ASEA 30/40/50 [56] MVA 115/23.0 kV

Overload Ratings:

Transformer	Nameplate	Summer Normal Rating No Loss of Life	Summer 12 Hour LTE Rating 1% Loss of Life
#108	30/40/50 [56] MVA	62 MVA	66 MVA

Station Capabilities:

Total Station Capacity (N-0) Normal Ratings	Station Firm Capacity (N-1) LTE Ratings	Load Transfers (MVA)	Total LCC (LTE + Transfers)
62 MVA	0 MVA	27.9 MVA	27.9 MVA

Station Load Forecast:

2004	2005	2006	2007	2008
26.7 MW	27.9MW	28.7 MW	29.5 MW	30.3 MW

Switching Actions:

Loss of #108 ASEA Transformer

Open: Circuit Switcher 10842 at Wareham
Main circuit breaker 108B42 at Wareham
Feeder Breaker #8442 at Wareham
Feeder Breaker #8342 at Wareham
Feeder Breaker #8132 at Tremont

Close: Tie Switch #T1-81-11 on Tremont Street *
Feeder Breaker #8332 (at Tremont)
Tie Switch #T1-84-88 (on ROW)

** The Tremont #81 Line MUST be transferred to West Pond #11 Line BEFORE picking up the #83 Line from Wareham, or you will overload the Tremont #113 12 MVA transformer.*

Distribution Feeder Switching:

For outage of the Wareham transformer, the transformers at Tremont Substation #713 and Valley Substation #715 carry the full station load of 26.7 MW.

The transfers and switching operations for contingency backup of the station's other 23kV DSS lines are shown on the attached table.

Total Transfer: 27.9 MVA

Summary of Concerns: Wareham Substation #714

Station:

Based on load projections, Wareham Substation #714 has adequate firm capability through load forecast year 2005 for a contingency outage of the 30/40/50 MVA transformer bank. The "limiting element" that arises at the Summer 2005 load level is the Valley Substation #715 12/16/20 MVA transformer bank. At the Summer 2004 load level, the Valley 12/16/20 MVA transformer will be at 99% of its LTE rating, post-contingency and post-switching. Please reference power flow diagram **PL-14**.

Due to high growth in the Tremont-Wareham-Valley power supply area due to the A. D. Makepeace development project, system upgrades may be required in the 2005-2008 time frame at the Valley #715 and Tremont #713 Substations. A "small area supply study" is currently in progress to identify infrastructure upgrade projects to support load growth attributable to the A. D. Makepeace development project. For the study conducted herein, minimum growth of 7.5 MW over ten years was assumed.

With this growth assumption, upgrade of the Valley #113 GE 12/16/20 MVA transformer to at least a 16/21/26 MVA rated unit will be required by Summer 2005. Due to the fact that the 16/21/26 MVA transformer at *Cape & Vineyard District's* Otis Substation #915 becomes limiting due to natural forecasted load growth in the same time frame, if this station is upgraded to a new 30/40/50 MVA transformer, this would free up the 16/21/26 MVA unit for use at Valley Substation #715 in the Plymouth District at minimal cost. *A priori,* the 12/16/20 MVA unit that is replaced at Valley could then be displaced for use at Tremont Substation #713 to replace the limiting 12 MVA transformer by Summer 2008.

The upgrade of the Valley Substation #714 12/16/20 MVA transformer to a higher-rated unit would address the overload observed when backing up the Wareham Substation.

Transmission:

From a station capacity perspective, a single contingency outage of the #108 115kV line is not problematic at Wareham Substation #714; loss of this line is identical to the loss of the transformer. A forced outage of three transformers (one at Wareham, one at Valley, and one at Manomet) for an outage of the #108 line cannot be supported, and load shedding at all three stations would be required.

The single-contingency outage performance of the #108 transmission line is discussed further under *Bulk Transmission Facility Outages*.

DSS/Distribution:

Contingency outages of any of the two (2) 23kV DSS lines served by Wareham Substation #793 are not problematic, and are summarized in the attached table.

Contingency backup of the Wareham #84 DSS line by the Valley #88 DSS line assumes completion of an approved project to upgrade 2.6 miles of 336 ACSR conductor to 795 ACSR conductor, rated for 49 MVA LTE, prior to Summer 2004.

4kV Substation and Distribution:

Wareham Substation #714 feeds two (2) 23/4.16 kV distribution substations: Onset #751, and Tempest Knob #754.

The table below summarizes the capacity of these 23/4.16 kV stations versus forecasted Summer peak loads:

4.16 kV Transformer	Normal Rating	2004 Projection	2008 Projection
Onset	1.5 MVA	1.7 MVA	1.9 MVA
Tempest Knob	1.5 MVA	**1.1 MVA**	**1.3 MVA**

Proposed Integrated Plan:

The following system bulk supply upgrade projects have been identified for the Wareham Substation #714 power supply area.

Marginal all-facilities-in overloads beyond top nameplate rating of the transformer at the Onset 23/4.16kV distribution substation can be addressed by the addition of thermostatically-controlled fans to increase the top nameplate ratings of those transformer by about 33%. This is estimated at $12k per installation.

Complete a previously-approved project to upgrade 2.6 miles of 336 ACSR conductor to 795 ACSR conductor, rated for 49 MVA LTE, prior to Summer 2004, estimated at $600k.

Recommended course of action for Wareham Substation #714

Action	Year needed	Estimated Cost
⇒ Complete upgrade of 2.6 miles of Valley #88 line to 795 ACSR conductor	2004	$600k
⇒ Install fans on Onset Substation #751 transformer to increase rating	2008	$12K

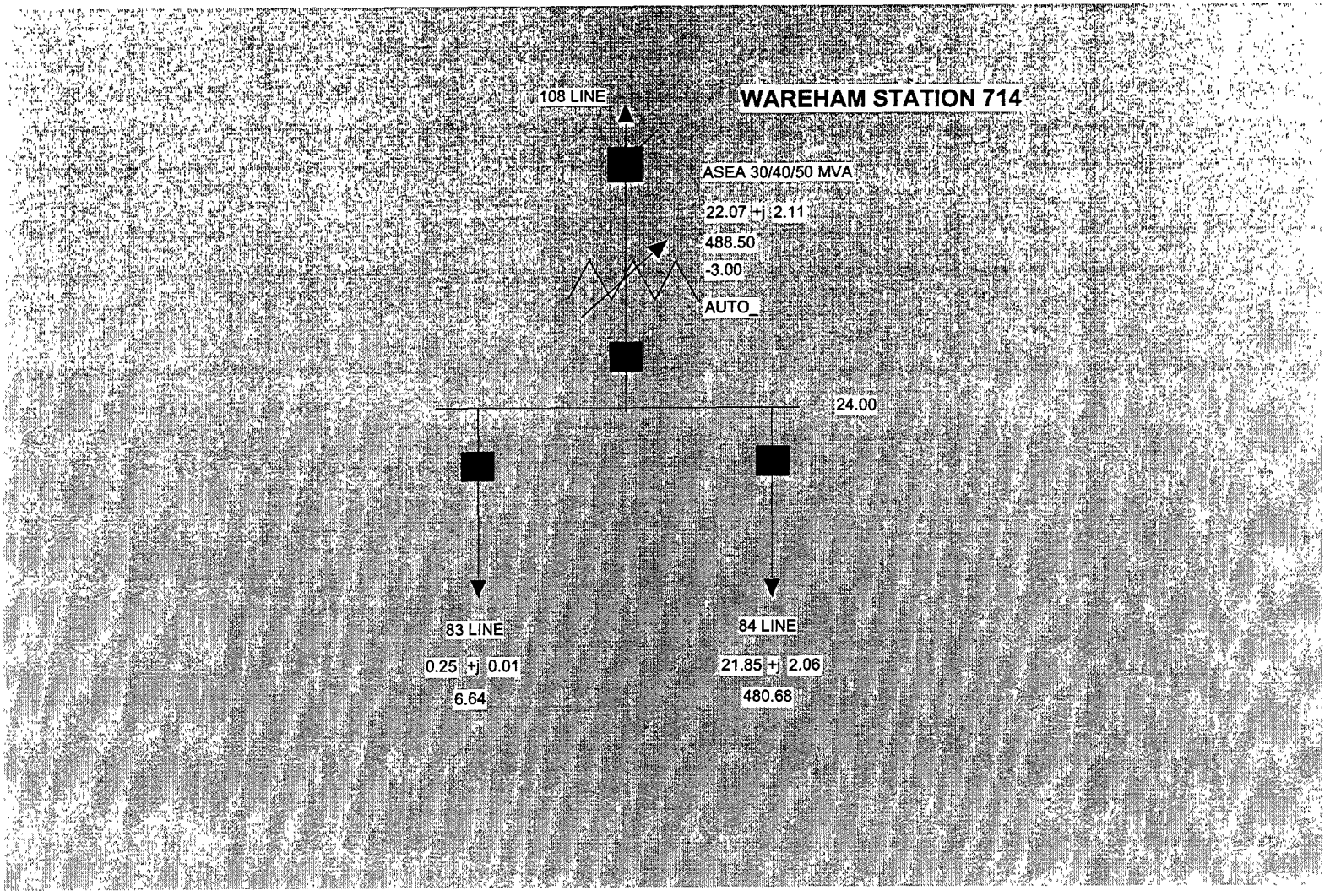
WAREHAM STATION 714
108 LINE
ASEA 30/40/50 MVA
22.07 +j 2.11
488.50
-3.00
AUTO_
24.00
83 LINE
0.25 +j 0.01
6.64
84 LINE
21.85 +j 2.06
480.68

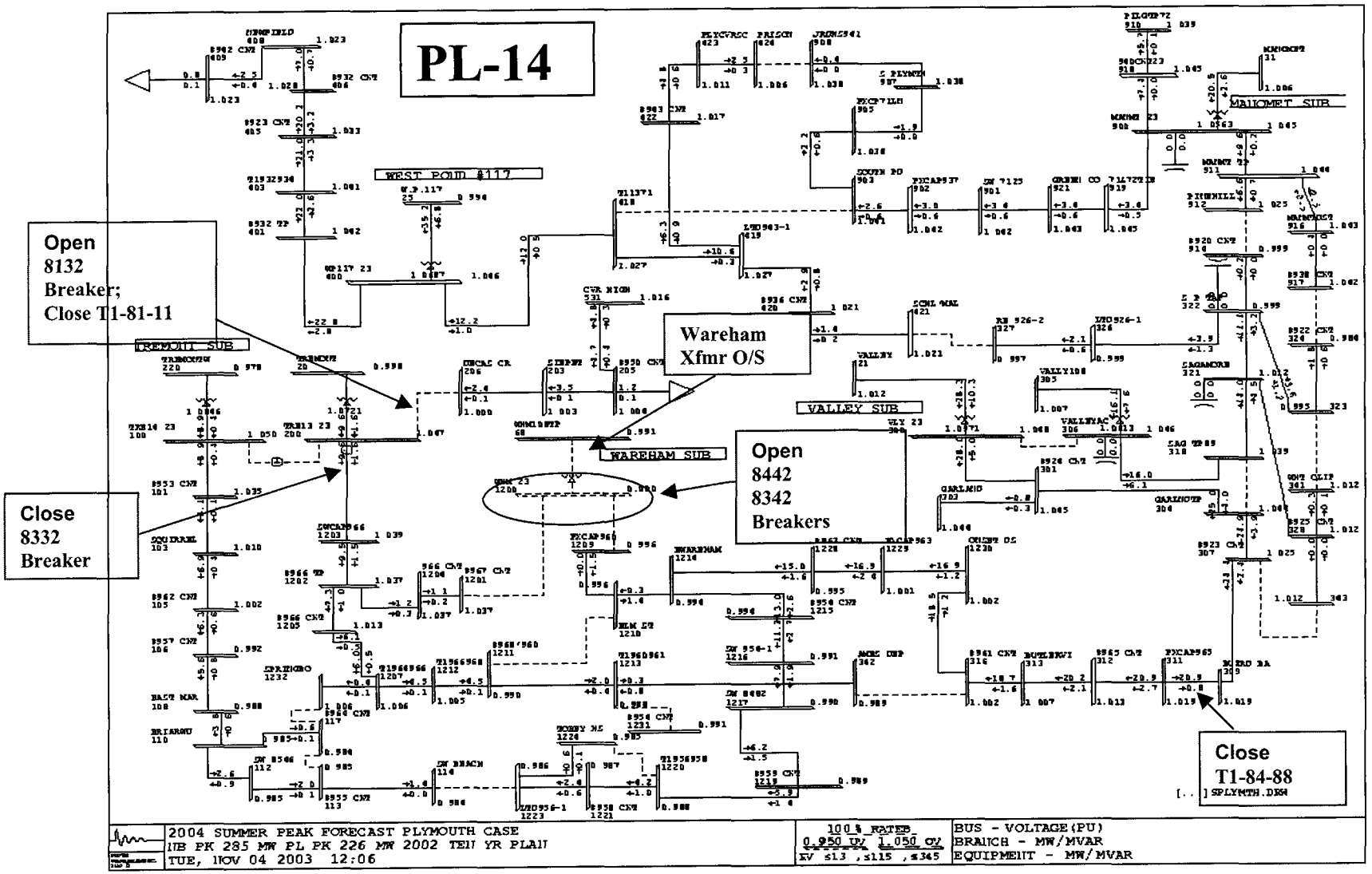
PL-14
Open
8132
Breaker;
Close T1-81-11
Close
8332
Breaker
Wareham
Xfmr O/S
Open
8442
8342
Breakers
Close
T1-84-88
WEST POND #117
TREMONT SUB
WAREHAM SUB
VALLEY SUB
MALLOMET SUB
2004 SUMMER PEAK FORECAST PLYMOUTH CASE
HB PK 285 MW PL PK 226 MW 2002 TEN YR PLAN
TUE, NOV 04 2003 12:06
100 % RATED
0.950 UV 1.050 OV
KV ≤13 , ≤115 , ≤345
BUS - VOLTAGE(PU)
BRANCH - MW/MVAR
EQUIPMENT - MW/MVAR
SPLYMTH.DSW

2003 5/10 Year Plan - Year 2004 DSS Line Load Transfers - Plymouth District

BULK SUBSTATION DSS LINE SINGLE-CONTINGENCY ANALYSIS

* Coincident Feeder peaks at Forecasted Summer 2004 District Peaks
* Switching Sequences and Effects of Load Transfer Under Coincident Peak Conditions

CIRCUIT NUMBER	COINCIDENT PEAK LOAD (MW)	(MX)	(MVA)	NUMBER CUSTOMERS	BACKUP CIRCUIT	BACKUP STATION	SWITCHING ACTIONS		BACKUP CIRCUIT LOAD (BEFORE TRANSFER) (MW)	(MX)	(MVA)	(AFTER TRANSFER) (MW)	(MX)	(MVA)	BACKUP CIRCUIT SCADA LIMITS NORMAL (MVA)	LTE (MVA)	STE (MVA)	TRIP (MVA)	PROBLEM AREAS
Wareham Substation																			
83	4.8	1.1	4.9	1586	83	Tremont	CLOSE 8332 OPEN 8342	**	0.0	0.0	0.0	4.9	1.2	5.0	16	17	18	19	
84	25.3	2.0	25.4	6201	88	Valley 113	CLOSE T1-84-88 OPEN 8842		6.7	2.1	7.0	28.3	4.1	28.6	19	20	21	22	#88 Line Upgrade Project due Spring 2004 Valley Station OSHA breaker upgrade project pending
					83	Wareham	CLOSE T1-960-961 OPEN RECL 961-2		4.8	1.1	4.9	9.3	2.3	9.6	16	17	18	19	

** Tremont 83 Circuit normally open. Tie is 8332 breaker at Tremont

2004 T&D OPERATING STUDY
Plymouth District

WEST POND SUBSTATION #737

West Pond Substation #737 serves a power supply area consisting of all or portions of the Towns of Plymouth, Carver, Kingston, and Plympton. During the summer of 2003, peak station load coincident with Plymouth District on 8/04/03 18:00 hours was 43.4 MVA.

West Pond Substation #737 consists of two 115/23.0 kV transformers:

#116W: General Electric 30/40/50 [56] MVA 115/23.0 kV
#117E: General Electric 30/40/50 [56] MVA 115/23.0 kV

Overload Ratings:

Transformer	Nameplate	Summer Normal Rating No Loss of Life	Summer 12 Hour LTE Rating 1% Loss of Life
#116W	30/40/50 [56] MVA	61 MVA	67 MVA
#117E	30/40/50 [56] MVA	60 MVA	65 MVA

Station Capabilities:

Total Station Capacity (N-0) Normal Ratings	Station Firm Capacity (N-1) LTE Ratings	Load Transfers (MVA)	Total LCC (LTE + Transfers)
121 MVA	60 MVA	19.5 MVA	79.5 MVA

Station Load Forecast:

2004	2005	2006	2007	2008
65.2 MW	67.4 MW	68.9 MW	70.1 MW	70.7 MW

Switching Actions:

Loss of #116W Transformer

Open: Circuit Switcher B11672
Main circuit breaker 116B72
Feeder Breaker #1372 at West Pond

Close: West Pond 23kV bus tie breaker #T1-72*
* Tap changers must be in same position, and off.
Tie Switch #T1-13-71 (on ROW at Long Pond Road)

Loss of #117E Transformer

Open: Circuit Switcher B11772
Main circuit breaker 117B72
Feeder Breaker #1372 at West Pond

Close: West Pond 23kV bus tie breaker #T1-72*
* Tap changers must be in same position, and off
Tie Switch #T1-13-71 (on ROW at Long Pond Road)

Distribution Feeder Switching:

For either transformer outage, remaining transformer and adjacent substation transformer at Manomet Substation #721 carry full station load of 65.2 MW.

While not required for loss of either transformer, transfer of the station's 23kV distribution supply lines via manual switches may be conducted for additional load reduction. The transfers and switching operations required are shown on the attached table.

Total Transfer: 19.5 MVA

Summary of Concerns: West Pond Substation #737

Station:

Based on load projections, West Pond Substation #737 has adequate firm capability through load forecast year 2008 for a contingency outage of either transformer bank. Please reference power flow diagrams **PL-15** through **PL-18**.

The limiting element reached by Summer 2008 is the 12/16/20 MVA transformer at Manomet Substation #721, which is overloaded by load transfers from West Pond Substation #737. There is already an identified need to upgrade the Manomet Substation transformer from 12/16/20 MVA to 30/40/50 MVA by Summer 2008, which is discussed under *Manomet Substation #721*.

Transmission:

From a station capacity perspective, contingency outages of either the #116 or #117 115kV lines is not problematic at West Pond Substation #737. Loss of either 115kV transmission line is identical in consequence to loss of the 115/23kV transformer connected to it.

Loss of the #117 line, if it also affects Kingston Substation #735 and Duxbury Substation #738, which would result in the outage of three (3) 23kV transformer banks, may require load shedding, and is discussed further under the #117 line outage at *Bulk Transmission Facility Outages*. Loss of the #116 line may have further transmission system impacts and is addressed under the #116 line outage at *Bulk Transmission Facility Outages*.

DSS/Distribution:

1. West Pond Substation #737 #12 Line may exceed 21.0 MVA SCADA LTE rating by 53%, and 24 MVA SCADA Trip setting may be exceeded, for contingency backup of the West Pond #10 Line.

   Actual conductor LTE rating of 51 MVA for 795 ACSR conductor on the #12 line is not exceeded. Changing the SCADA alarm to match actual conductor LTE rating is recommended.

2. West Pond Substation #737 #14 Line may exceed 28.0 MVA SCADA LTE rating by 68%, and 32 MVA SCADA Trip setting may be exceeded, for contingency backup of the West Pond #12 Line.

   Actual conductor LTE rating of 49 MVA for 795 ACSR conductor on the #14 line is not exceeded. Changing the SCADA alarm to match actual conductor LTE rating is recommended.

3. West Pond Substation #737 #12 Line may exceed 21.0 MVA SCADA LTE rating by 127%, and 24 MVA SCADA Trip setting may be exceeded, for contingency backup of the West Pond #14 Line.

   Actual conductor LTE rating of 51 MVA for 795 ACSR conductor on the #12 line is not exceeded. Changing the SCADA alarm to match actual conductor LTE rating is recommended.

4. The Manomet Substation #721 12/16/20 MVA transformer will exceed its 29 MVA LTE rating by 5% and the Valley Substation #715 15/20/25 MVA transformer will exceed its 40 MVA LTE rating by 4%, by Summer 2008.

   The previously-identified substation transformer upgrade at Manomet (upgrade to 30/40/50 MVA unit), would address this situation (see *Manomet Substation #721*).

   Further, as described at *Manomet Substation #721* for contingency backup of the Manomet #1 line by the West Pond #13 line, 2.9 miles of 336 ACSR conductor on the West Pond #13 line must be upgraded to 795 ACSR conductor by Summer 2004 due the interconnection of large step loads.

23.0 kV Feeder	Backup Circuit	Summer LTE Rating in MVA	Projected % of LTE 2004	Projected % of LTE 2008
West Pond #10	West Pond #12	21.0 (SCADA) 51 (795 ACSR conductor)	153% **63%**	164% **68%**
West Pond #12	West Pond #14	28.0 (SCADA) 49 (795 ACSR conductor)	168% **96%**	182% 104%
West Pond #14	West Pond #12	21.0 (SCADA) 51 (795 ACSR conductor)	227% **94%**	240% **99%**
West Pond #13	Manomet #71	29 MVA (Xfmr)	**77%**	105% (Xfmr)

4kV Substation and Distribution:

West Pond Substation #737 feeds three (3) 23/4.16 kV distribution substations: Newfield Street Substation #736, Samoset Substation #742, and North Plymouth Substation #734. Newfield is a double-ended 4.16kV substation with two (2) transformers.

The table below summarizes the capacity of these 23.0/4.16 kV stations versus forecasted Summer peak loads:

4.16 kV Transformer	Normal Rating	2004 Projection	2008 Projection
Newfield Street #1	4.98 MVA	**2.6 MVA**	**2.7 MVA**
Newfield Street #2	5.00 MVA	**2.2 MVA**	**2.4 MVA**
Samoset	2.50 MVA	**1.2 MVA**	**1.3 MVA**
North Plymouth *	3.3 MVA*	**1.7 MVA**	**1.9 MVA**

**Fans have been added to this unit in an attempt to increase top nameplate rating by 33%*

Proposed Integrated Plan:

The suggested actions table listed below will address all of the capacity concerns in the West Pond Substation #737 power supply area.

Three (3) 23 kV DSS line overloads (beyond existing SCADA alarm and trip settings occur during post-contingency load transfers of the West Pond #10 line to the #12 line, the #12 line to the #14 line, and the #14 line to the #12 line. Existing conductor rating for 795 ACSR (49 to 51 MVA LTE) is not exceeded; the SCADA alarm limits and trip settings should be investigated and updated.

As previously identified in the section pertaining to the Manomet Substation #721, the West Pond #13 line should be upgraded from 336 ACSR to 795 ACSR conductor for a distance of 2.9 miles for post-contingency backup of the Manomet #71 line, by Summer 2004, estimated at $750k.

As previously identified in the section pertaining to the Manomet Substation #721, the Manomet 12/16/20 MVA transformer should be upgraded to a 30/40/50 MVA unit by Summer 2008, for post-contingency backup of the West Pond Substation in that year, estimated at $1.5M.

Recommended course of action for West Pond Substation #737

Action	Year needed	Estimated Cost
⇒ Investigate SCADA LTE rating increase to 49 MVA on #12, #14 Lines	2004	$0
⇒ Upgrade West Pond #13 Line from 336 ACSR to 795 ACSR conductor 2.9 mi.	2005	TBD
⇒ Upgrade Manomet 12/16/20 MVA transformer to 30/40/50 MVA unit	2008	TBD

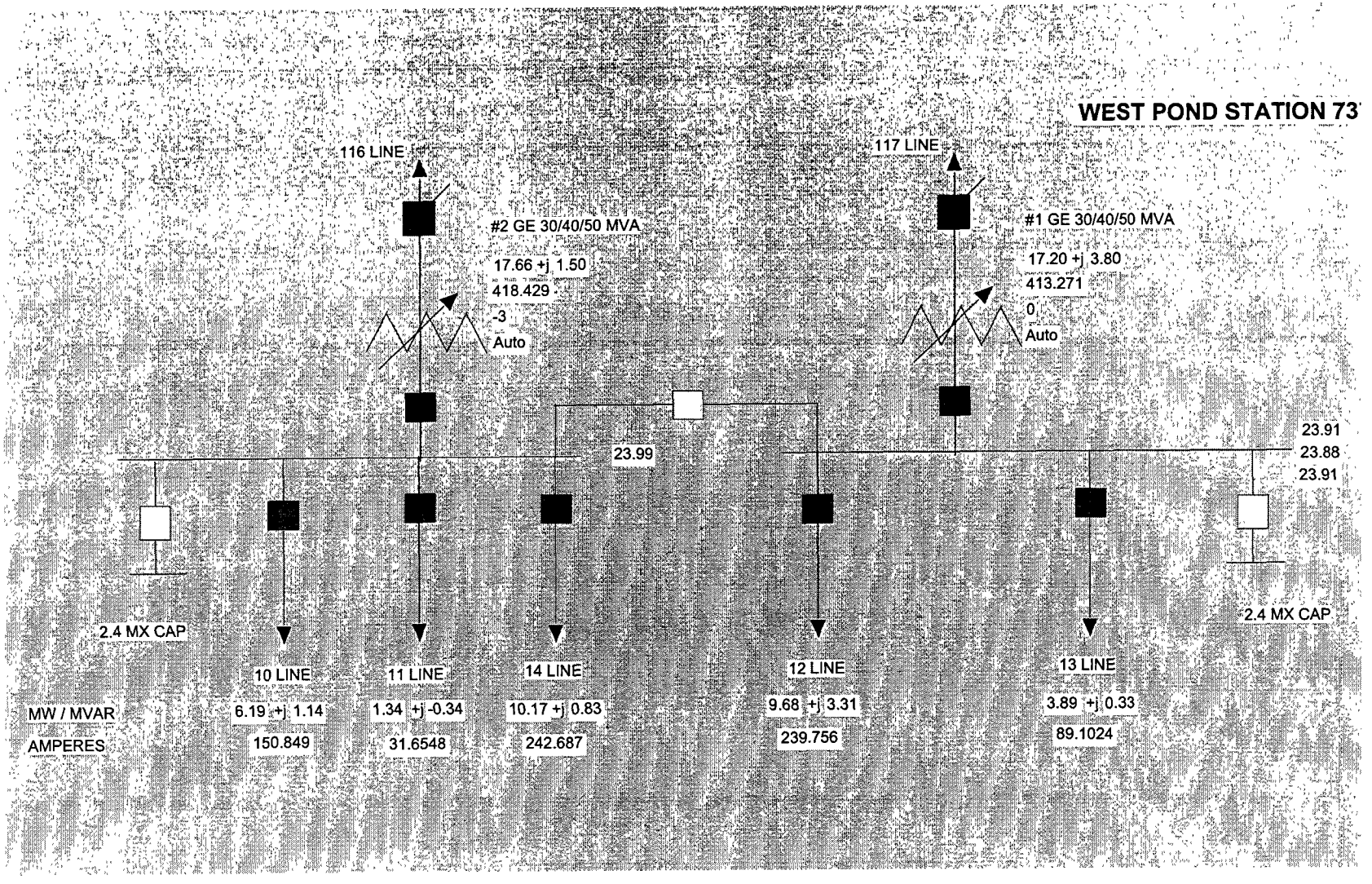
WEST POND STATION 73
116 LINE
117 LINE
#2 GE 30/40/50 MVA
17.66 +j 1.50
418.429
-3
Auto
#1 GE 30/40/50 MVA
17.20 +j 3.80
413.271
0
Auto
23.99
23.91
23.88
23.91
2.4 MX CAP
2.4 MX CAP
10 LINE
11 LINE
14 LINE
12 LINE
13 LINE
MW / MVAR
AMPERES
6.19 +j 1.14
150.849
1.34 +j -0.34
31.6548
10.17 +j 0.83
242.687
9.68 +j 3.31
239.756
3.89 +j 0.33
89.1024

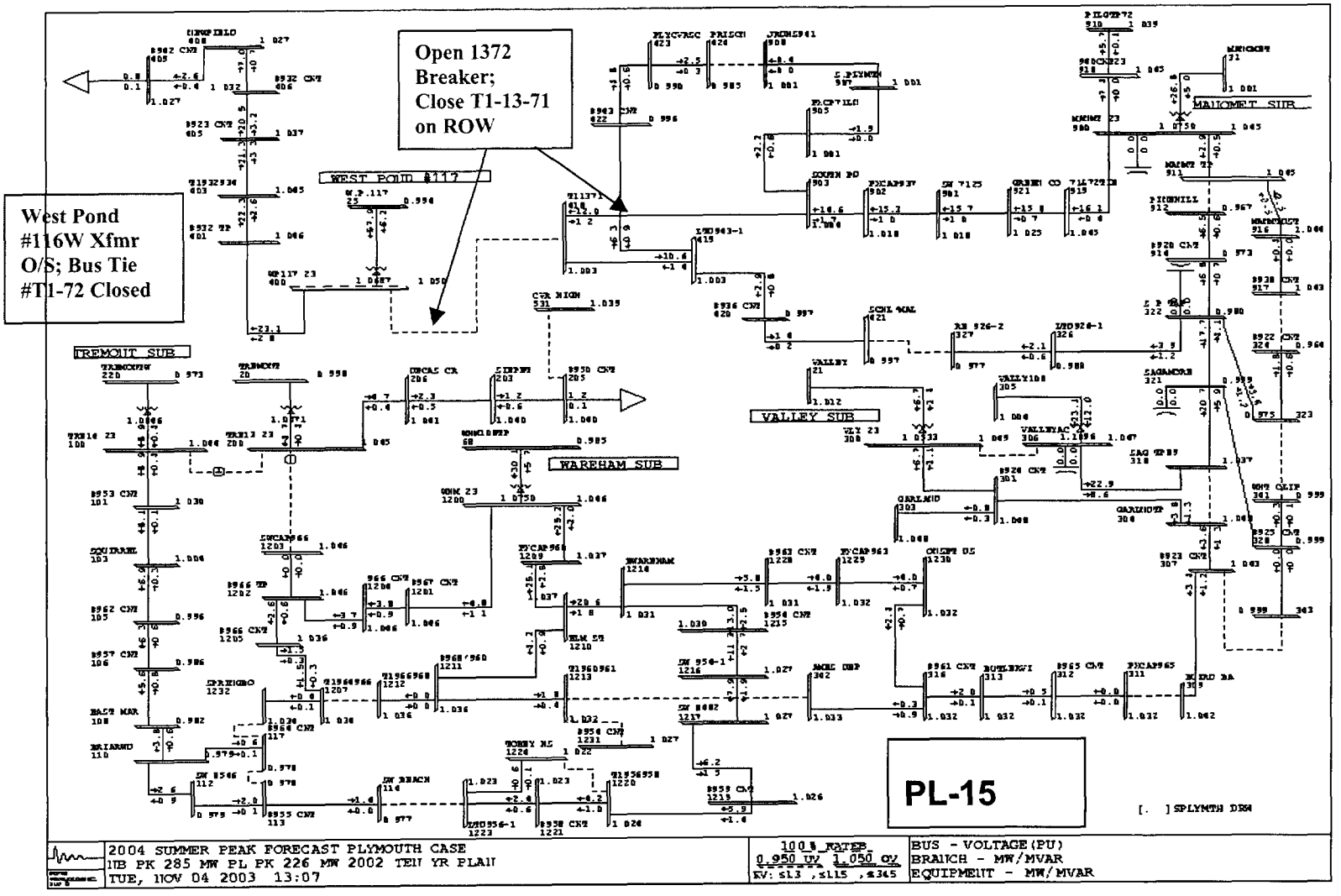
Open 1372 Breaker; Close T1-13-71 on ROW
West Pond #116W Xfmr O/S; Bus Tie #T1-72 Closed
WEST POND #117
TREMONT SUB
WAREHAM SUB
VALLEY SUB
MAHOMET SUB
PL-15
2004 SUMMER PEAK FORECAST PLYMOUTH CASE
TUE, NOV 04 2003 13:07
BUS - VOLTAGE(PU)
BRANCH - MW/MVAR
EQUIPMENT - MW/MVAR

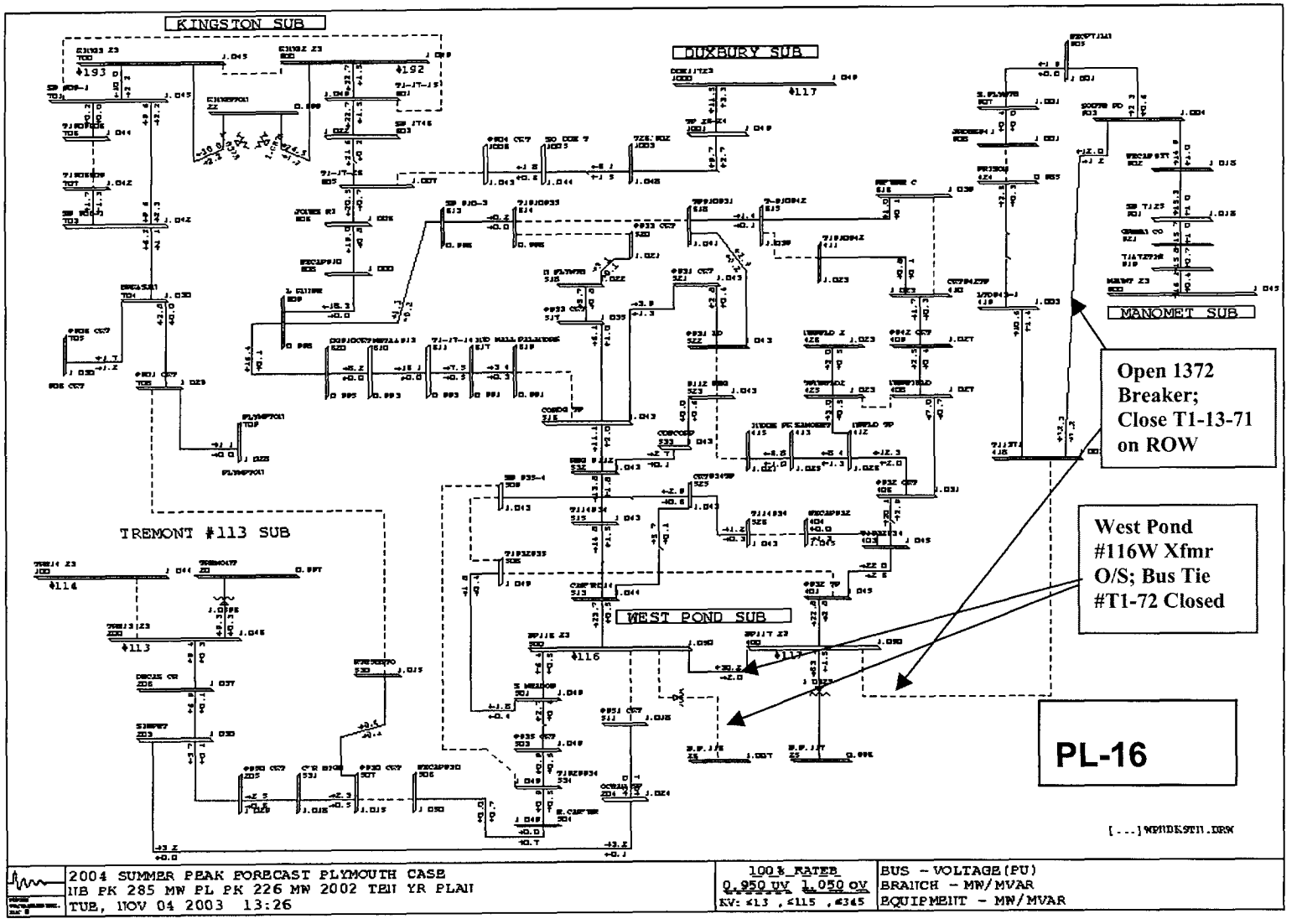
KINGSTON SUB
DUXBURY SUB
MANOMET SUB
TREMONT #113 SUB
WEST POND SUB
Open 1372 Breaker; Close T1-13-71 on ROW
West Pond #116W Xfmr O/S; Bus Tie #T1-72 Closed
PL-16
2004 SUMMER PEAK FORECAST PLYMOUTH CASE
HB PK 285 MW PL PK 226 MW 2002 TEN YR PLAN
TUE, NOV 04 2003 13:26
100% RATED
0.950 UV 1.050 OV
KV: ≤13 , ≤115 , ≤345
BUS - VOLTAGE(PU)
BRANCH - MW/MVAR
EQUIPMENT - MW/MVAR

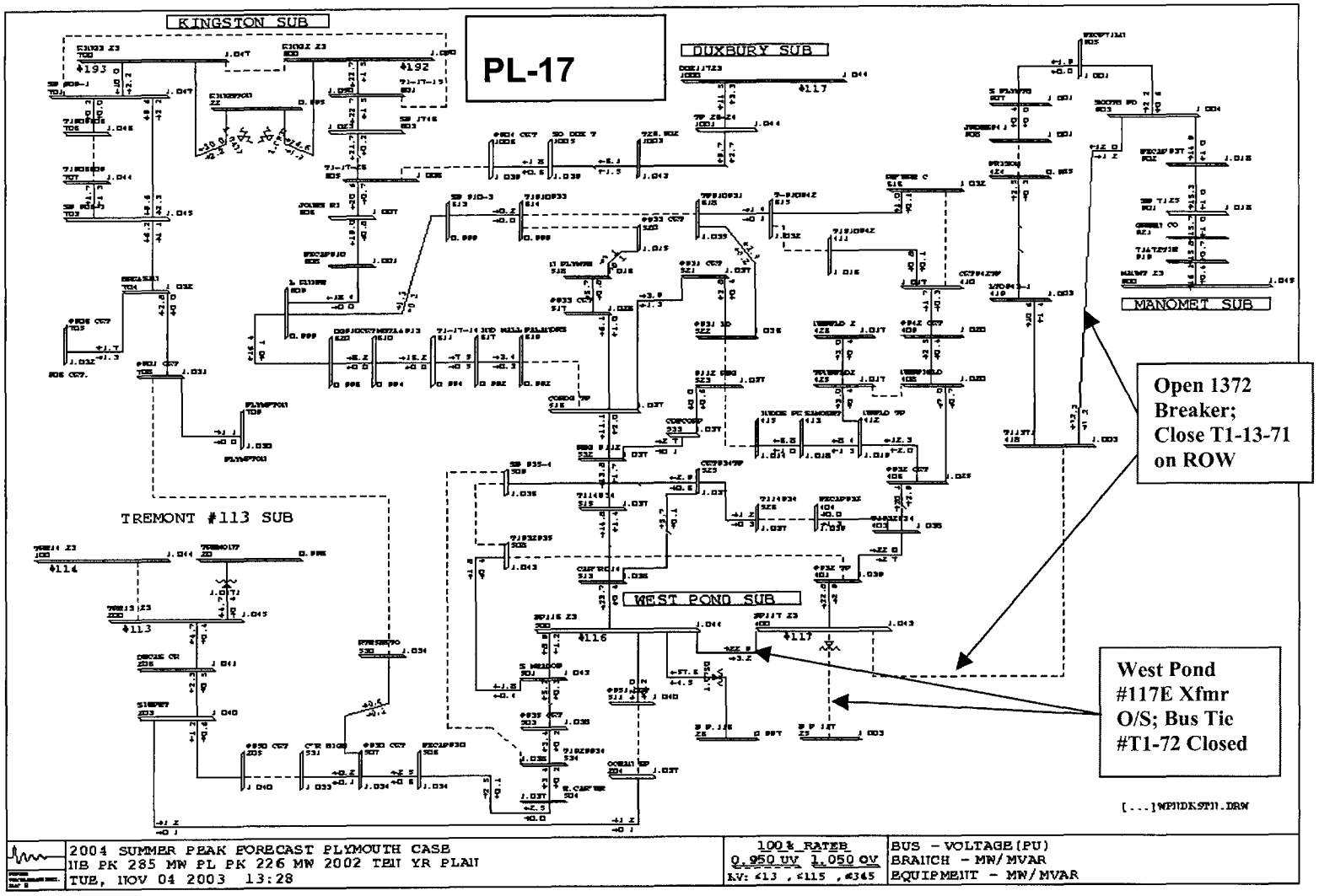
PL-17
KINGSTON SUB
DUXBURY SUB
MANOMET SUB
TREMONT #113 SUB
WEST POND SUB
Open 1372 Breaker; Close T1-13-71 on ROW
West Pond #117E Xfmr O/S; Bus Tie #T1-72 Closed
2004 SUMMER PEAK FORECAST PLYMOUTH CASE
NB PK 285 MW PL PK 226 MW 2002 TEN YR PLAN
TUE, NOV 04 2003 13:28
100% RATED
0.950 UV 1.050 OV
BUS - VOLTAGE(PU)
BRANCH - MW/MVAR
EQUIPMENT - MW/MVAR

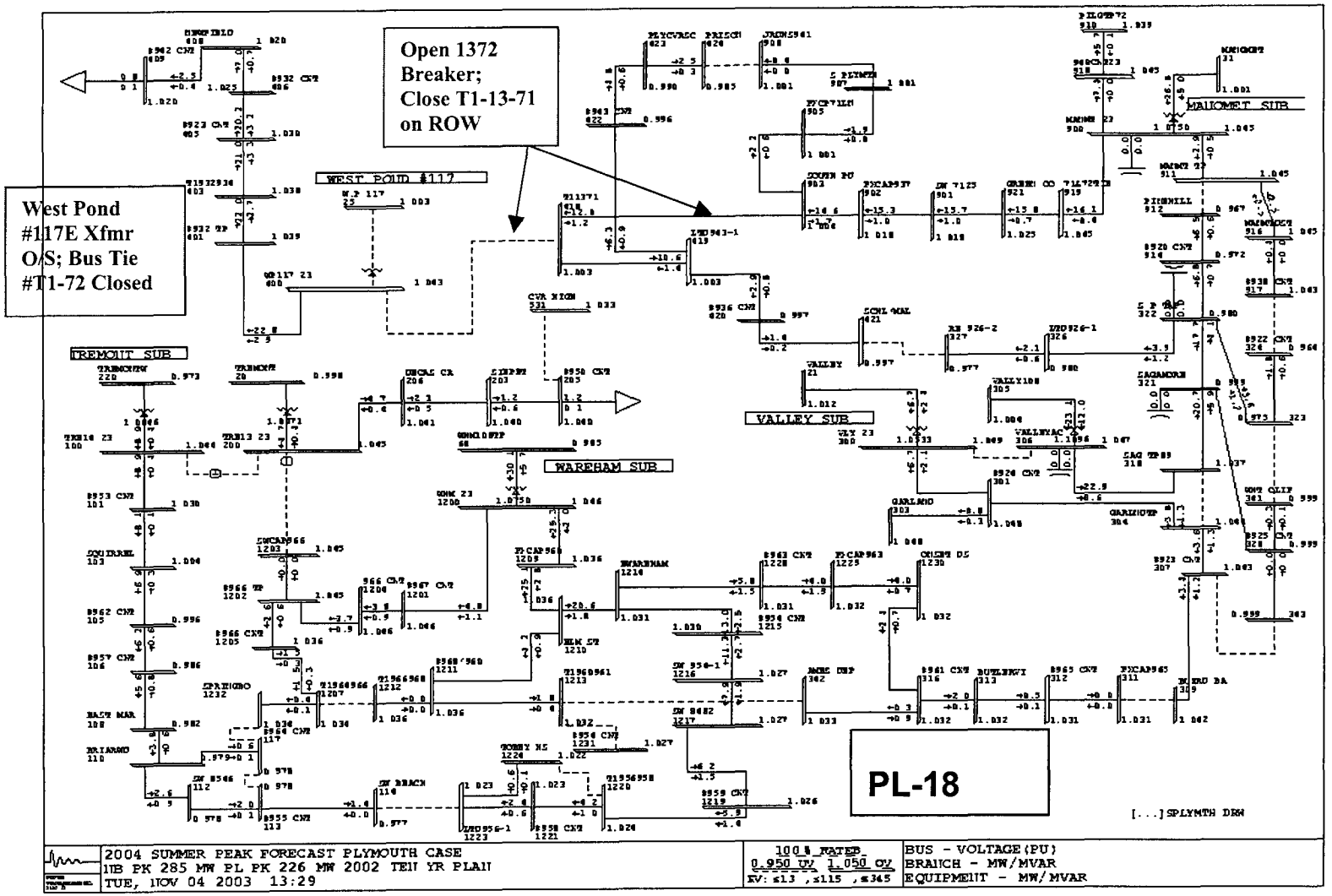
Open 1372 Breaker; Close T1-13-71 on ROW
West Pond #117E Xfmr O/S; Bus Tie #T1-72 Closed
WEST POND #117
TREMONT SUB
WAREHAM SUB
VALLEY SUB
MALIOMET SUB
PL-18
2004 SUMMER PEAK FORECAST PLYMOUTH CASE
HB PK 285 MW PL PK 226 MW 2002 TEN YR PLAN
TUE, NOV 04 2003 13:29
100% RATED
0.950 UV 1.050 OV
KV: ≤13 , ≤115 , ≤345
BUS - VOLTAGE(PU)
BRANCH - MW/MVAR
EQUIPMENT - MW/MVAR

2003 5/10 Year Plan - Year 2004 DSS Line Load Transfers - Plymouth District

BULK SUBSTATION DSS LINE SINGLE-CONTINGENCY ANALYSIS

* Coincident Feeder peaks at Forecasted Summer 2004 District Peaks
* Switching Sequences and Effects of Load Transfer Under Coincident Peak Conditions

CIRCUIT NUMBER	COINCIDENT PEAK LOAD (MW)	(MX)	(MVA)	NUMBER CUSTOMERS	BACKUP CIRCUIT	BACKUP STATION	SWITCHING ACTIONS	BACKUP CIRCUIT LOAD (BEFORE TRANSFER) (MW)	(MX)	(MVA)	(AFTER TRANSFER) (MW)	(MX)	(MVA)	BACKUP CIRCUIT SCADA LIMITS NORMAL (MVA)	LTE (MVA)	STE (MVA)	TRIP (MVA)	PROBLEM AREAS
West Pond Substation																		
10	8.9	1.2	9.0	3915		12 W. Pond 117	CLOSE T1-932-935 OPEN 1072	22.8	2.8	23.0	31.8	4.1	32.1	20	21	23	24	Flow Exceeds both SCADA LTE and Trip Field Check Reverse flow through 935-2 recloser
11	2.0	-0.2	2.0	1263		81 Tremont 113	CLOSE T1-11-81 OPEN 1172	4.7	-0.4	4.7	6.7	0.5	6.7	13	14	15	16	
12	22.8	2.8	23.0	3900		14 W. Pond 116	CLOSE T1-932-935 OPEN 1272	23.7	-0.5	23.7	46.8	3.0	46.9	27	28	30	32	#14 Line Upgrade to 795 ACSR due 6/1 Flow Exceeds both SCADA LTE and Trip Field Check
13	12.0	0.5	12.0	1995		71 Manomet	CLOSE T1-22-27 OPEN 1372	3.4	-0.5	3.4	16.1	0.4	16.1	20	21	23	24	
14	23.2	0.5	23.2	4260		12 W. Pond 117	CLOSE T1-12-911 OPEN 1472	22.8	2.8	23.0	47.4	5.8	47.8	20	21	23	24	Flow Exceeds both SCADA LTE and Trip Field Check

Cape & Vineyard District

Bulk Substation Transformer Outages
Distribution Supply Line Outages
Thermal Results and Remedial Switching Actions

2004 T&D OPERATING STUDY
Cape & Vineyard District

FALMOUTH SUBSTATION #933

Falmouth Substation #933 serves a power supply area consisting of portions of the Town of Falmouth, and all of the Martha's Vineyard Towns of Aquinnah, Chilmark, Tisbury, W. Tisbury, Edgartown, Vineyard Haven, and Oak Bluffs. During the summer of 2003, peak station load coincident with Cape District on 8/16/03 20:00 hours was 80.8 MVA.

Falmouth Substation #933 consists of two 115/23.0 kV transformers:

#115E: Federal Pacific 30/40/50 [56] MVA 115/23.0 kV
#107W: General Electric 30/40/50 [56] MVA 115/23.0 kV

Overload Ratings:

Transformer	Nameplate	Summer Normal Rating No Loss of Life	Summer 12 Hour LTE Rating 1% Loss of Life
#115E	30/40/50 [56] MVA	57 MVA	62 MVA
#107W	30/40/50 [56] MVA	56 MVA	61 MVA

Station Capabilities:

Total Station Capacity (N-0) Normal Ratings	Station Firm Capacity (N-1) LTE Ratings	Load Transfers (MVA)	Total LCC (LTE + Transfers)
113 MVA	66 MVA * 56 MVA *	27.5 MVA	93.5 MVA 83.5 MVA

Station Load Forecast:

2004	2005	2006	2007	2008
82.3 MW	83.2 MW	83.9 MW	84.6 MW	85.6 MW

**Firm capability of Falmouth power supply includes LTE of most limiting transfomer plus 10 MVA firm capacity available from Martha's Vineyard diesels. Known firm capability reduced to 56 MVA in December 2008, when contract with Mirant for output of Vineyard diesels currently expires.*

Switching Actions:

Loss of #115E Transformer

Open: Circuit Switcher 11583
Main circuit breaker 11582
Feeder Breaker #9832

Close: Falmouth 23kV bus tie breaker #T1-2
* Tap changers must be in same position, and off.

Tie Switch #T1-98-98 (to Hatchville)
Capacitor Bank breakers 1158c and 1079c.

Mirant's Oak Bluffs / W. Tisbury Generation dispatched to 13.5 MW output

Loss of #107W Transformer

Open: Circuit Switcher 10793
Main circuit breaker 10792
Feeder Breaker #9832

Close: Falmouth 23kV bus tie breaker #T1-2
* Tap changers must be in same position, and off.

Tie Switch #T1-98-98 (to Hatchville)

Capacitor Bank breakers 1158c and 1079c.

Mirant's Oak Bluffs / W. Tisbury Generation dispatched to 13.5 MW output.

Distribution Feeder Switching:

For either transformer outage, remaining Falmouth Substation #933 transformer and Hatchville Substation #936 transformer carry full station load of 82.3 MW.

Since there is only one 23kV tie line with other bulk substation (#98 line to Hatchville Substation #936), no other 23kV DSS lines can be transferred to reduce Falmouth Substation load post-contingency. However, contingency backup of each of the non-station-tie 23kV feeders can be accomplished, and the transfers and switching operations required to back each feeder up are shown on the attached table.

For Martha's Vineyard 23kV submarine cable outage performance and switching, please see subsection at *Martha's Vineyard 23kV Submarine Cable Supply.*

Total Transfer: 27.5 MVA

Summary of Concerns: Falmouth Substation #933

Station:

Based on load projections, Falmouth Substation #933 has adequate firm capability through load forecast year 2007 for a contingency outage of either transformer bank, from a bulk substation supply standpoint and ignoring minor ancillary equipment limitations. Please reference power flow diagrams **CV-1** and **CV-2**.

In Summer 2004, for a contingency outage of one of the transformer banks, a 1200 Ampere (49 MVA LTE) limitation posed by the 23kV bus tie breakers (such as T1-2) is exceeded by the flow through the bus during the tied condition. Post-contingency flow through the bus tie is 54 MVA for an outage of the #115E FPE bank, 10% over LTE rating. Post-contingency flow through the bus tie is 27 MVA for an outage of the 107W GE bank, and the 49 MVA limit is not exceeded in that instance. Since

there is an already-identified need to upgrade the bus tie breakers for OSHA safety compliance, it is proposed to upgrade these 23kV tie breakers to 2000 Amperes (80 MVA) as part of this OSHA upgrade, by Summer 2005, at an estimated cost of $275k.

By Summer 2007, for a contingency outage of the #115W FPE transformer bank, the #107E GE transformer bank will exceed its 61 MVA LTE limit, even after all 23kV distribution switching and full dispatch of Martha's Vineyard diesel generation is accomplished.

By December, 2008, the contract with Mirant for the output of the Oak Bluffs and W. Tisbury diesel generation expires, further exacerbating the firm supply deficiency at Falmouth Substation #933, with a reduction in firm capability by 10 MVA.

Transmission:

From a station capacity perspective, contingency outages of either the #115E or #107W 115kV lines is not generally problematic at Falmouth Substation #933. Loss of either 115kV line is identical in performance to the single contingency outage of the Falmouth substation transformer that it serves.

Loss of the #107W line, if it also affects Otis Substation #915, which would result in the outage of two (2) 23kV transformer banks, may require load shedding, and is discussed further under the #107W line outage at *Bulk Transmission Facility Outages*.

Loss of the #115E line, if it also affects Hatchville Substation #936 and Mashpee Substation #946, which would result in the outage of three (3) 23kV transformer banks, may require load shedding, and is discussed further under the #115E line outage at *Bulk Transmission Facility Outages*.

Local (Cape Mainland) DSS/Distribution:

1. Falmouth Substation #933 #97 Line may reach 104% of 43.0 MVA SCADA LTE rating for contingency backup of Falmouth #76 Line. Martha's Vineyard diesel generation at Oak Bluffs must be dispatched to keep #97 line loading below 47 MVA trip setting. Phase conductor is 795 ACSR, capable of 49 MVA LTE rating.

2. Falmouth Substation #933 #98 Line, for contingency backup of the #97 line, will require dispatch 8.1 MW of Martha's Vineyard generation at Oak Bluffs during the tied condition. Post-contingency, #98 line loading will be at 86% of SCADA LTE rating.

Please refer to contingency switching on the attached Table.

23.0 kV Feeder	Backup Circuit	Summer LTE Rating in MVA	Projected % of LTE 2004	Projected % of LTE 2008
Falmouth #76	Falmouth #97	43 (SCADA) 49 (795 ACSR condr)	118% 104%	121% 106%
Famouth #97	Falmouth #98	28 (SCADA) 36 (477 ACSR)	**86%** **67%**	**97%** **94%**

Martha's Vineyard 23kV Submarine Cables:

Please see subsection entitled *Martha's Vineyard Submarine Cable Outage Contingencies*.

5kV Class Substation and Distribution:

Falmouth Substation #933 feeds six (6) distribution substations of various primary voltages:

- Falmouth Local Substation #933 23/4.8kV delta
- W. Falmouth Substation #969 23/4.8kV delta
- Oak Bluffs Substation #913 23/4.8kV delta
- Vineyard Haven Substation #982 23/4.8kV delta
- Edgartown Substation #960 23/8.32kV wye
- Chilmark (Bettlebung) Substation #955 23/8.32kV wye

The table below summarizes the capacity of these distribution stations versus forecasted Summer peak loads:

5kV Transformer	Normal Rating	2004 Projection	2008 Projection
Falmouth Local 4.8kV	5.00 MVA	5.7 MVA	6.1 MVA
W. Falmouth 4.8kV	2.50 MVA	**2.0 MVA**	**2.1 MVA**
Oak Bluffs 4.8kV	2.50 MVA	**1.5 MVA**	**1.7 MVA**
Vineyard Haven 4.8kV	3.75 MVA	**2.9 MVA**	**3.0 MVA**
Edgartown 8.32kV wye	3.50 MVA	**3.0 MVA**	**3.2 MVA**
Chilmark 8.32kV wye	2.50 MVA	**1.8 MVA**	**1.8 MVA**

Proposed Integrated Plan:

The suggested actions table listed below will address all of the capacity concerns in the Falmouth Substation #933 power supply area.

A "small area supply study" will be performed to ascertain the most effective, and least-cost, supply improvements for the Falmouth Substation #933 power supply area for the next ten (10) years. Some alternatives would be as follows:

<u>DISTRIBUTION PLAN "A" (no reliance on Island Generation)</u>

1. Triple-end Falmouth Substation with a third (3rd) 30/40/50 [56] MVA transformer, by 2007.
2. Replace the #75 23kV submarine cable with a new cable, rated for 18 to 22 MVA LTE, by 2005.
3. Install 2nd 23kV DSS line from Falmouth to Elm Road to address single-contingency outage of #97 O/H line resulting in two (2) Vineyard cables being out of service, by 2005.

Estimated Cost:	$3.0 M substation (3rd transformer)
	$1.6 M distribution supply (2nd DSS line to Elm Road)
	$6.0 M distribution supply (replace #75 submarine cable)
Total:	$10.6 M (constant, non-escalated dollars)

DISTRIBUTION PLAN "B" (continued reliance on Island Generation)

1. Extend contract with Mirant by five (5) additional years for output of 13.5 MW of diesel units at Oak Bluffs and W. Tisbury.
2. **Or**, install 25 MVA Kendall Jet turbine generator at W. Tisbury (Martha's Vineyard Airport site), to replace shortfall caused by expiration of Mirant contract, by Summer 2008. This will require a 13.8/23kV generator step-up transformer to be installed.
3. Replace the #75 23kV submarine cable with a new cable, rated for 18 to 22 MVA LTE, by 2005.
4. Install 2nd 23kV DSS line from Falmouth to Elm Road to address single-contingency outage of #97 O/H line resulting in two (2) Vineyard cables being out of service, by 2005.

Estimated Costs to be determined

TRANSMISSION PLAN "C" (no reliance on Island generation, no expansion or replacement of 23kV submarine cables):

1. Install two (2) 115kV submarine cables, approximately seven (7) miles from Falmouth Substation #933, through existing ducts parallel to the #99 and #75 cables to Shore Road, then across Martha's Vineyard sound, trenched or jetted into the sea bottom, to Franklin Street Regulator Station #985.
2. Install two (2) 30/40/50 MVA 115/23kV substation transformers, 23kV buswork, two 23kV feeder breakers, and other ancillary equipment at Franklin Street Substation #985.

With this plan, contract for Mirant generation would not have to be renewed or extended, and existing 23kV submarine cable system could be maintained as-is (four 23kV submarine cables, which will remain available for service)

Estimated Costs to be determined

For any bulk supply plan selected, the 23kV bus ties at Falmouth Substation #933 must be upgraded from 1200 Amperes to 2000 Ampere (80 MVA) rating to prevent post-contingency overload for loss of a transformer bank. This is also an OSHA-related safety upgrade.

Marginal all-facilities-in overloads beyond top nameplate rating of the transformer at the Falmouth Local 23/4.8kV distribution substation can be addressed by the addition of thermostatically-controlled fans to increase the top nameplate ratings of those transformer by about 33%. This is estimated at $12k per installation.

The final selection of a proposed set of upgrade plans will be fully investigated as well as consideration for additional alternatives. This analysis will completed during the upcoming planning cycle.

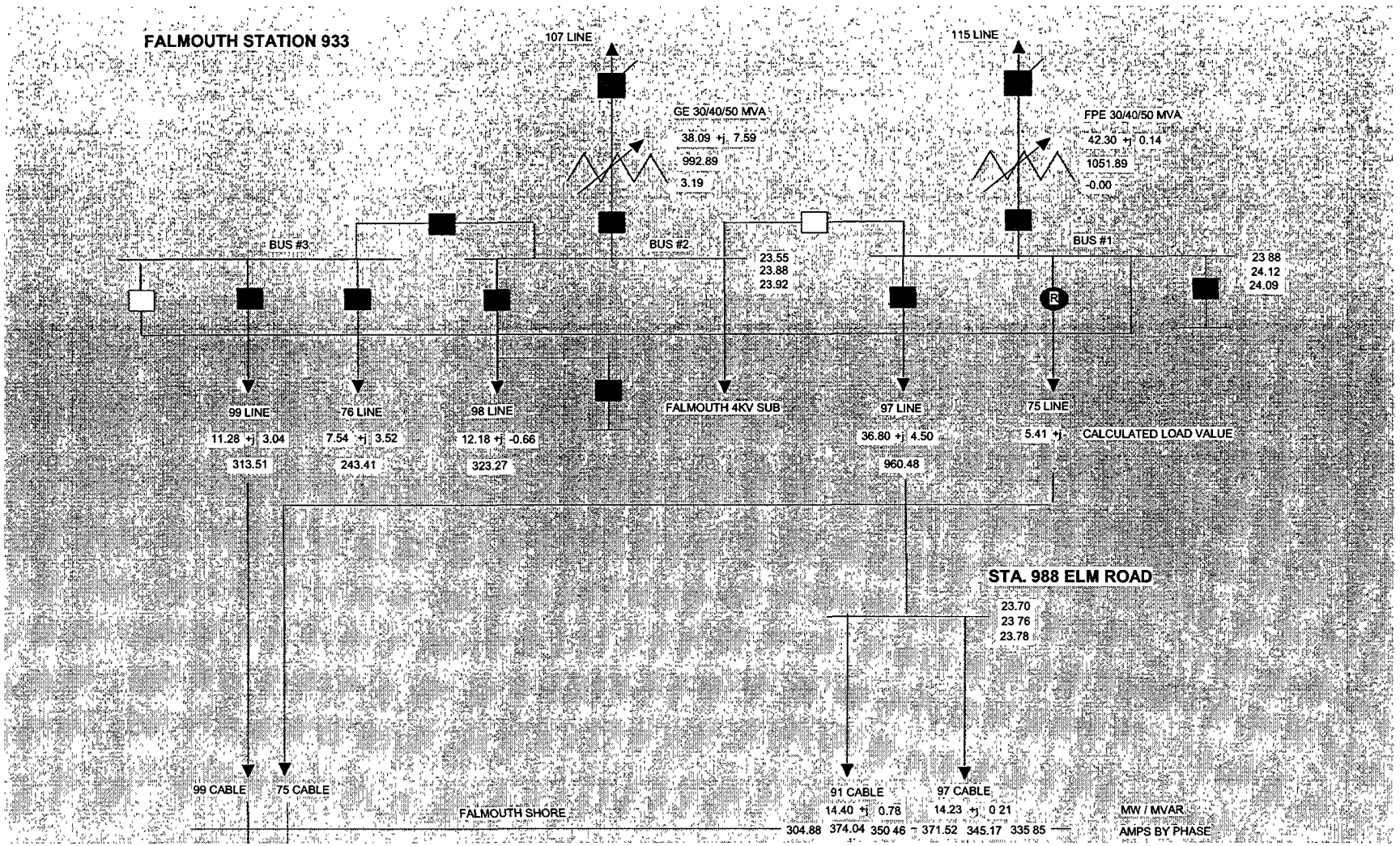
FALMOUTH STATION 933
107 LINE
115 LINE
GE 30/40/50 MVA
38.09 +j 7.59
992.89
3.19
FPE 30/40/50 MVA
42.30 +j 0.14
1051.89
-0.00
BUS #3
BUS #2
BUS #1
23.55
23.88
23.92
23 88
24.12
24.09
99 LINE
76 LINE
98 LINE
FALMOUTH 4KV SUB
97 LINE
75 LINE
11.28 +j 3.04
313.51
7.54 +j 3.52
243.41
12.18 +j -0.66
323.27
36.80 +j 4.50
960.48
5.41 +j
CALCULATED LOAD VALUE
STA. 988 ELM ROAD
23.70
23 76
23.78
99 CABLE
75 CABLE
FALMOUTH SHORE
91 CABLE
14.40 +j 0.78
97 CABLE
14.23 +j 0 21
304.88 374.04 350 46 371.52 345.17 335 85
MW / MVAR
AMPS BY PHASE

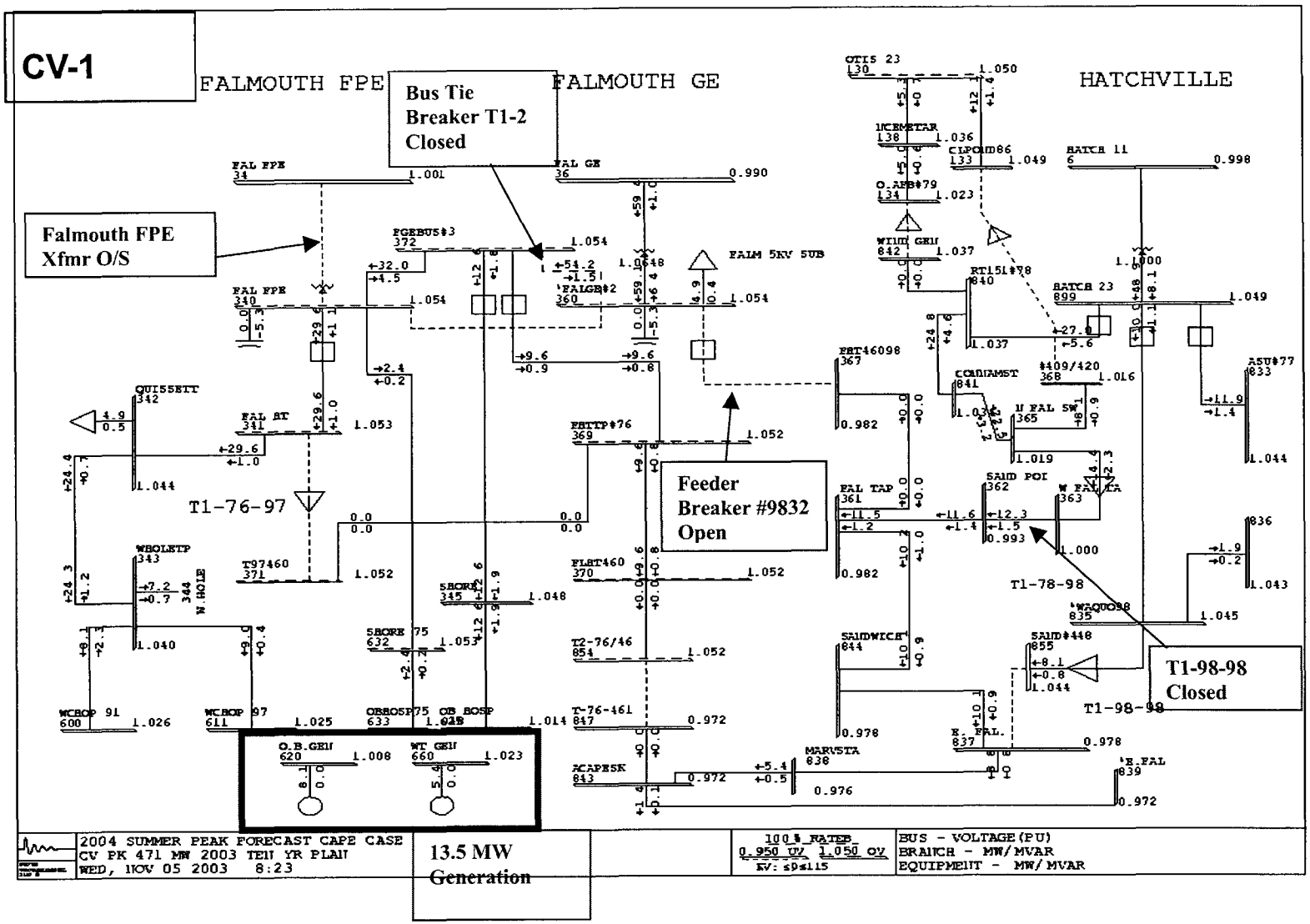
CV-1
FALMOUTH FPE
FALMOUTH GE
HATCHVILLE
Bus Tie Breaker T1-2 Closed
Falmouth FPE Xfmr O/S
Feeder Breaker #9832 Open
T1-98-98 Closed
T1-76-97
T1-78-98
T1-98-98
13.5 MW Generation
2004 SUMMER PEAK FORECAST CAPE CASE
CV PK 471 MW 2003 TEN YR PLAN
WED, NOV 05 2003 8:23
100% RATED
0.950 UV 1.050 OV
BUS - VOLTAGE(PU)
BRANCH - MW/MVAR
EQUIPMENT - MW/MVAR

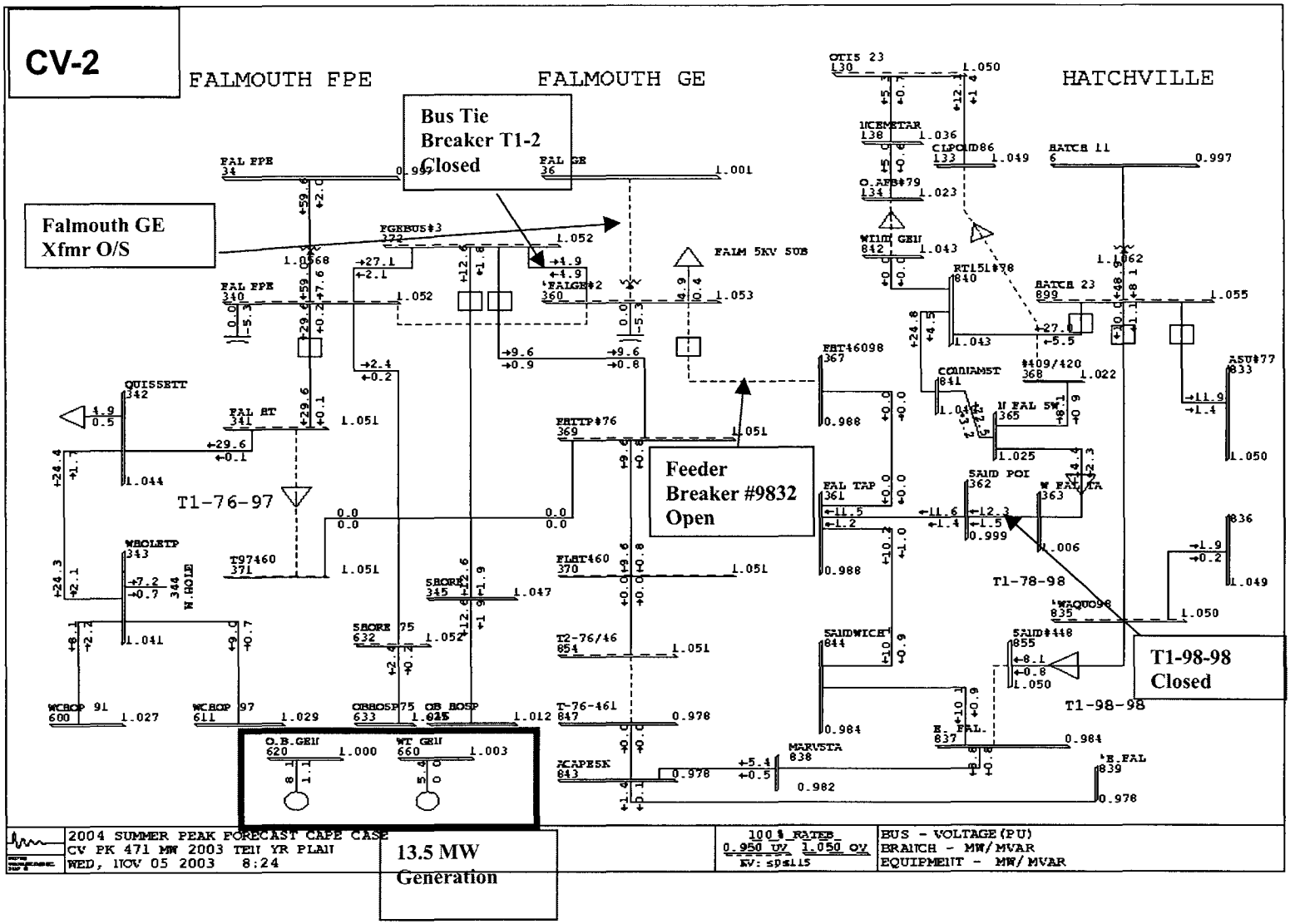
CV-2
FALMOUTH FPE
FALMOUTH GE
HATCHVILLE
Bus Tie Breaker T1-2 Closed
Falmouth GE Xfmr O/S
Feeder Breaker #9832 Open
T1-98-98 Closed
13.5 MW Generation
T1-76-97
T1-78-98
T1-98-98
2004 SUMMER PEAK FORECAST CAPE CASE
CV PK 471 MW 2003 TEN YR PLAN
WED, NOV 05 2003 8:24
100% RATES
0.950 UV 1.050 OV
BUS - VOLTAGE (PU)
BRANCH - MW/MVAR
EQUIPMENT - MW/MVAR

2003 5/10 Year Plan - Year 2004 DSS Line Load Transfers - Cape & Vineyard District

BULK SUBSTATION DSS LINE SINGLE-CONTINGENCY ANALYSIS

* Coincident Feeder peaks at Forecasted Summer 2004 District Peaks
* Switching Sequences and Effects of Load Transfer Under Coincident Peak Conditions

CIRCUIT NUMBER	COINCIDENT PEAK LOAD (MW)	(MX)	(MVA)	NUMBER CUSTOMERS	BACKUP CIRCUIT	BACKUP STATION	SWITCHING ACTIONS	BACKUP CIRCUIT LOAD (BEFORE TRANSFER) (MW)	(MX)	(MVA)	BACKUP CIRCUIT LOAD (AFTER TRANSFER) (MW)	(MX)	(MVA)	BACKUP CIRCUIT SCADA LIMITS NORMAL (MVA)	LTE (MVA)	STE (MVA)	TRIP (MVA)	PROBLEM AREAS
Falmouth Substation																		
76	9.6	0.9	9.6	2488	98	Falmouth GE	CLOSE T2-76-461 OPEN 7632	14.2	1.8	14.3	24.4	4.2	24.8	37	43	43	47	461 Ckt. 33% > 14 MVA LTE Rating
	OR				97	Falmouth FPE	CLOSE T1-76-97 OPEN 7632 BKR	44.8	7.8	45.5	50.4	6.3	50.8	37	43	43	47	#97 Line Exceeds LTE and SCADA Trip 3.5 MW diesel generation at Oak Bluffs
97	44.8	7.7	45.5	14092	76	Falmouth GE	CLOSE T1-76-97 OPEN 9732 CLOSE T1-76-461 OPEN T1-76-76	9.6	0.9	9.6	12.3	1.8	12.4	37	43	43	47	
					98	Falmouth GE	CLOSE T1-98-98 OPEN 9832	14.2	1.8	14.3	23.7	4.2	24.1	27	28	30	32	8.1 MW diesel generation at Oak Bluffs
98	14.2	1.8	14.3	5714	98	Hatchville	CLOSE T1-98-98 OPEN 9832	10.0	1.1	10.1	24.5	3.6	24.8	27	28	30	32	

Note: Martha's Vineyard #91, #97, and #99 23kV submarine cable outage analyses shown in a separate table

2004 T&D OPERATING STUDY
Cape & Vineyard District

HARWICH SUBSTATION #968

Harwich Substation #968 serves a power supply area consisting of all or portions of the Towns of Harwich, Brewster, Dennis, and Chatham. During the summer of 2003, peak station load coincident with Cape District on 8/16/03 20:00 hours was 98.8 MVA.

Harwich Substation #968 consists of two 115/23.0 kV transformers:

#119: ASEA 30/40/50 [56] MVA 115/23.0 kV
#118: McGraw-Edison 30/40/50 [56] MVA 115/23.0 kV

Overload Ratings:

Transformer	Nameplate	Summer Normal Rating No Loss of Life	Summer 12 Hour LTE Rating 1% Loss of Life
#119	30/40/50 [56] MVA	59 MVA	66 MVA
#118	30/40/50 [56] MVA	64 MVA	70 MVA

Station Capabilities:

Total Station Capacity (N-0) Normal Ratings	Station Firm Capacity (N-1) LTE Ratings	Load Transfers (MVA)	Total LCC (LTE + Transfers)
123 MVA	66 MVA	39.0 MVA	105 MVA

Station Load Forecast:

2004	2005	2006	2007	2008
83.8 MW	84.4 MW	85.3 MW	86.3 MW	87.4 MW

Switching Actions:

Loss of #119 ASEA Transformer

Open: Circuit Switcher 11973
Main circuit breaker 11972
Feeder Breaker #8932

Close: Harwich 23kV bus tie breaker #T3-E-W
* Tap changers must be in same position, and off.

Tie Switch #T1-89-90 (to Hyannis)

Capacitor Bank breakers 1197c and 1187c.

Transfer of #89 Line to Hyannis #90 Line MUST be accomplished BEFORE closing Harwich tie breaker

Loss of #118 McGraw-Edison Transformer

Open: Circuit Switcher 11873
Main circuit breaker 11872
Feeder Breaker #8932

Close: Harwich 23kV bus tie breaker #T3-E-W
* Tap changers must be in same position, and off.

Tie Switch #T1-89-90 (to Hyannis)

Capacitor Bank breakers 1197c and 1187c.

Transfer of #89 Line to Hyannis #90 Line MUST be accomplished BEFORE closing Harwich tie breaker

Distribution Feeder Switching:

For either transformer outage, remaining Harwich Substation #968 transformer and Hyannis Junction Substation #123 transformer carry full station load of 83.8 MW.

Contingency backup of each of the four (4) 23kV Harwich DSS feeders can be accomplished, and the transfers and switching operations required to back each feeder up are shown on the attached table.

Total Transfer: 39.0 MVA

Summary of Concerns: Harwich Substation #968

Station:

Based on load projections, Harwich Substation #968 has adequate firm capability through load forecast year 2013 for a contingency outage of either transformer bank. Please reference power flow diagrams **CV-3** and **CV-4**.

Transmission:

From a station capacity perspective, contingency outages of either the #118 or #119 115kV lines is not generally problematic at Harwich Substation #968. Loss of either 115kV line is identical in performance to the single contingency outage of the Harwich substation transformer that it serves.

Loss of the #118 line, if it also affects Orleans Substation #975, and Wellfleet Substation #976 (by way of trip of the #125 line), which would result in the outage of three (3) 23kV transformer banks, may require load shedding, and is discussed further under the #118 line outage at *Bulk Transmission Facility Outages*.

Loss of the #119 line, if it also affects Orleans Substation #975, and Hyannis Junction Substation #958 (by way of trip of the #123 line), which would result in the outage of three (3) 23kV transformer banks, may require load shedding, and is discussed further under the #119 line outage at *Bulk Transmission Facility Outages*.

DSS/Distribution:

1. Harwich Substation #968 #95 Line may reach 40.9 MVA, which is 120% of 34.0 MVA SCADA LTE rating for contingency backup of Harwich #92 Line, with a 38 MVA trip setting. Phase conductor is 795 ACSR, capable of 49 MVA LTE rating, readjusting SCADA alarm and trip settings is recommended.

2. Harwich Substation #968 #92 Line may reach 40.9 MVA, which is 120% of 34.0 MVA SCADA LTE rating for contingency backup of Harwich #95 Line, with a 38 MVA trip setting. Phase conductor is 795 ACSR, capable of 49 MVA LTE rating, readjusting SCADA alarm and trip settings is recommended.

Contingency backup of 23kV DSS feeders #89 and #85 are not problematic from a thermal or voltage performance standpoint.

Please refer to contingency switching on the attached Table.

23.0 kV Feeder	Backup Circuit	Summer LTE Rating in MVA	Projected % of LTE 2004	Projected % of LTE 2008
Harwich #95	Harwich #92	34 (SCADA) 49 (795 ACSR)	121% **83%**	125% **87%**
Harwich #92	Harwich #95	34 (SCADA) 49 (795 ACSR)	121% **83%**	125% **87%**

5kV Class Substation and Distribution:

Harwich Substation #968 feeds three (3) distribution substations of various primary voltages:

- Harwich Distribution Substation #973 23/4.16kV wye
- W. Harwich Substation #974 23/4.16kV wye
- N. Dennis Substation #959 23/8.32kV wye

The table below summarizes the capacity of these distribution stations versus forecasted Summer peak loads:

5kV Transformer	Normal Rating	2004 Projection	2008 Projection
Harwich 4.16kV	2.50 MVA	2.6 MVA	2.7 MVA
W. Harwich 4.16kV *	2.50 MVA	2.6 MVA	2.7 MVA
N. Dennis 8.32kV*	2.50 MVA	**2.4 MVA**	2.5 MVA

**Both station transformers comprised of three (3) 833kVA single phase units*

Proposed Integrated Plan:

The suggested actions table listed below will address all of the capacity concerns in the Harwich Substation #968 power supply area.

Two (2) 23 kV DSS line overloads (beyond existing SCADA alarm and trip settings occur during post-contingency load transfers of the Harwich #92 and #95 DSS lines. Existing conductor rating for 795 ACSR (49 MVA LTE) is not exceeded; the SCADA alarm limits and trip settings should be investigated and updated.

Marginal all-facilities-in overloads beyond top nameplate rating of the transformers at the Harwich, W. Harwich, and N. Dennis distribution substation can be addressed by the addition of thermostatically-controlled fans to increase the top nameplate ratings of those transformer by about 33%. This is estimated at $12k per installation, total of $36k for all three stations

Recommended course of action for Harwich Substation #968

Action	Year needed	Estimated Cost
⇒ Increase SCADA Alarm and Trip settings on #92 and #95 DSS Lines	2004	$0
⇒ Install fans on Harwich, W. Harwich Distribution Substation Transformers	2004	$24k
⇒ Install fans on N. Dennis Distribution Substation Transformers	2008	TBD

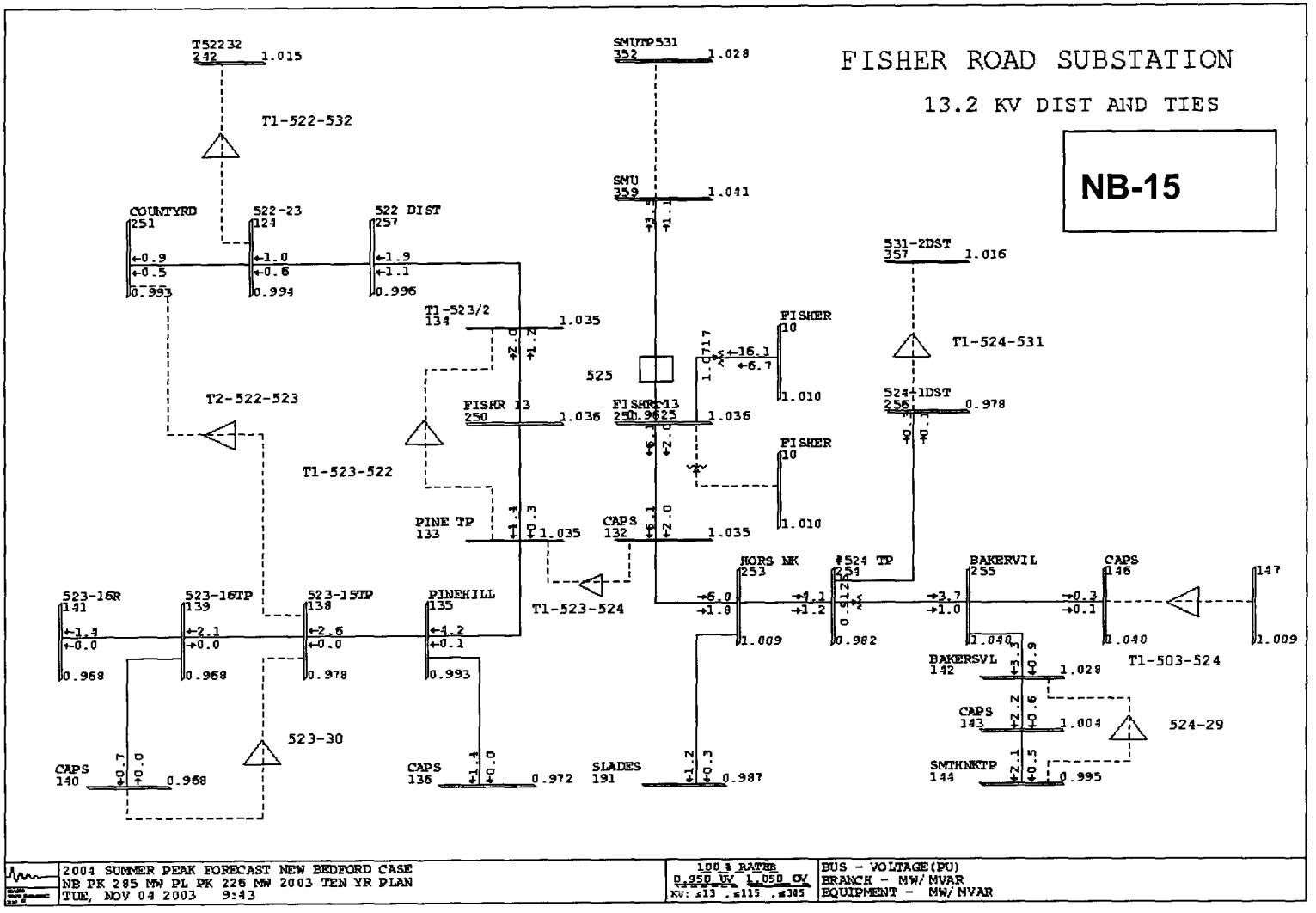
FISHER ROAD SUBSTATION
13.2 KV DIST AND TIES
NB-15
T52232
242
1.015
T1-522-532
SMUTP531
352
1.028
SMU
359
1.041
COUNTYRD
251
522-23
124
522 DIST
257
531-2DST
357
1.016
T1-523/2
134
1.035
FISHER
10
1.010
T1-524-531
525
T2-522-523
FISHR 13
250
1.036
FISHR 13
250
1.036
524-1DST
256
0.978
T1-523-522
FISHER
10
1.010
PINE TP
133
1.035
CAPS
132
1.035
HORS NK
253
#524 TP
254
BAKERVIL
255
CAPS
146
147
523-16R
141
523-16TP
139
523-15TP
138
PINEHILL
135
T1-523-524
1.009
0.982
1.040
1.040
1.009
T1-503-524
BAKERSVL
142
1.028
CAPS
143
1.004
524-29
523-30
CAPS
140
0.968
CAPS
136
0.972
SLADES
191
0.987
SMTHNKTP
144
0.995
2004 SUMMER PEAK FORECAST NEW BEDFORD CASE
NB PK 285 MW PL PK 226 MW 2003 TEN YR PLAN
TUE, NOV 04 2003 9:43
100 % RATEB
0.950 UV 1.050 OV
KV: ≤13 , ≤115 , ≤345
BUS - VOLTAGE(PU)
BRANCH - MW/MVAR
EQUIPMENT - MW/MVAR

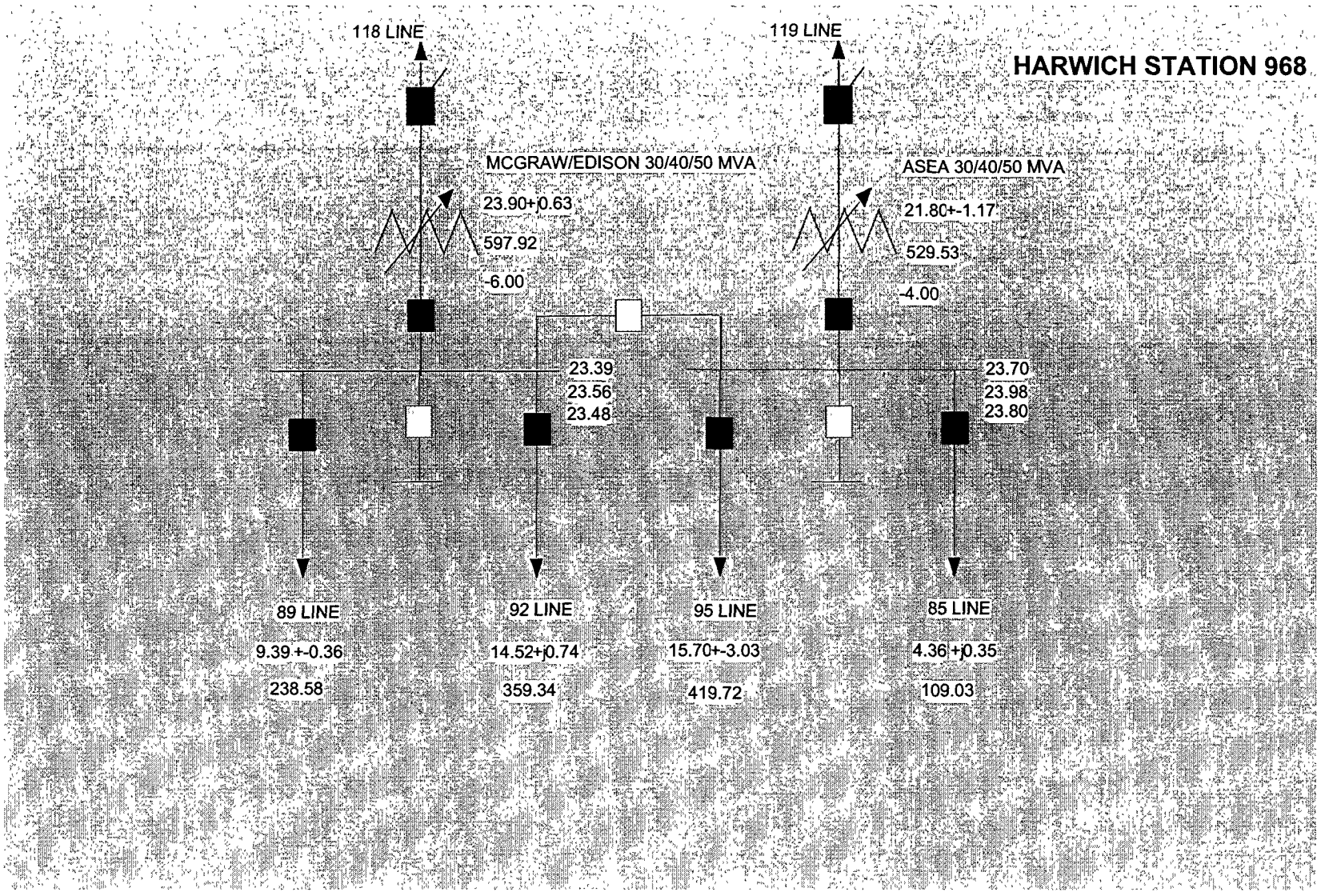
HARWICH STATION 968
118 LINE
119 LINE
MCGRAW/EDISON 30/40/50 MVA
23.90+j0.63
597.92
-6.00
ASEA 30/40/50 MVA
21.80+-1.17
529.53
-4.00
23.39
23.56
23.48
23.70
23.98
23.80
89 LINE
9.39+-0.36
238.58
92 LINE
14.52+j0.74
359.34
95 LINE
15.70+-3.03
419.72
85 LINE
4.36+j0.35
109.03

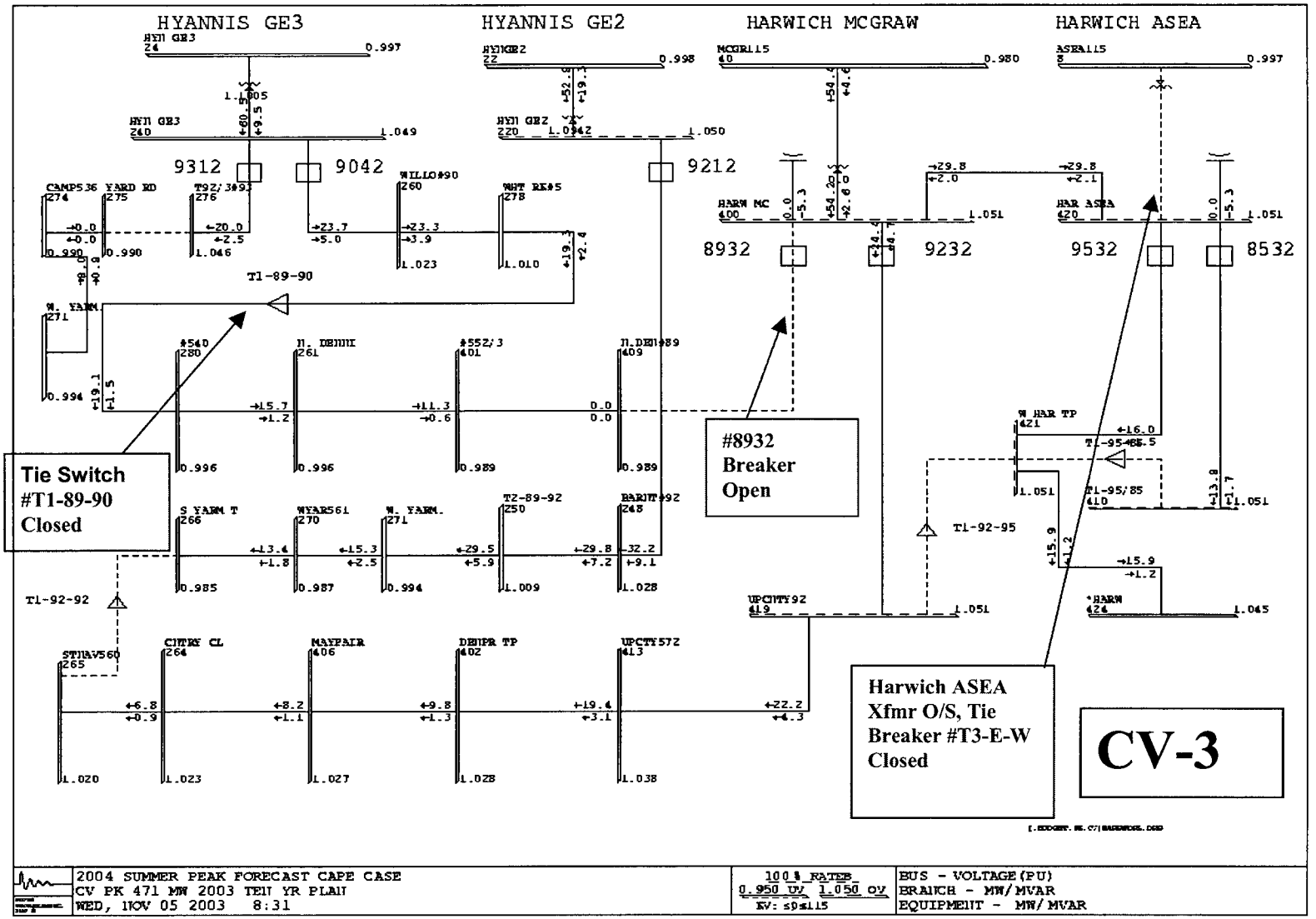
HYANNIS GE3
HYANNIS GE2
HARWICH MCGRAW
HARWICH ASEA
9312
9042
9212
8932
9232
9532
8532
T1-89-90
T1-92-92
T1-92-95
Tie Switch
#T1-89-90
Closed
#8932
Breaker
Open
Harwich ASEA
Xfmr O/S, Tie
Breaker #T3-E-W
Closed
CV-3
2004 SUMMER PEAK FORECAST CAPE CASE
CV PK 471 MW 2003 TEN YR PLAN
WED, NOV 05 2003 8:31
100% RATES
0.950 UV 1.050 OV
KV: ≤9≤115
BUS - VOLTAGE (PU)
BRANCH - MW/MVAR
EQUIPMENT - MW/MVAR

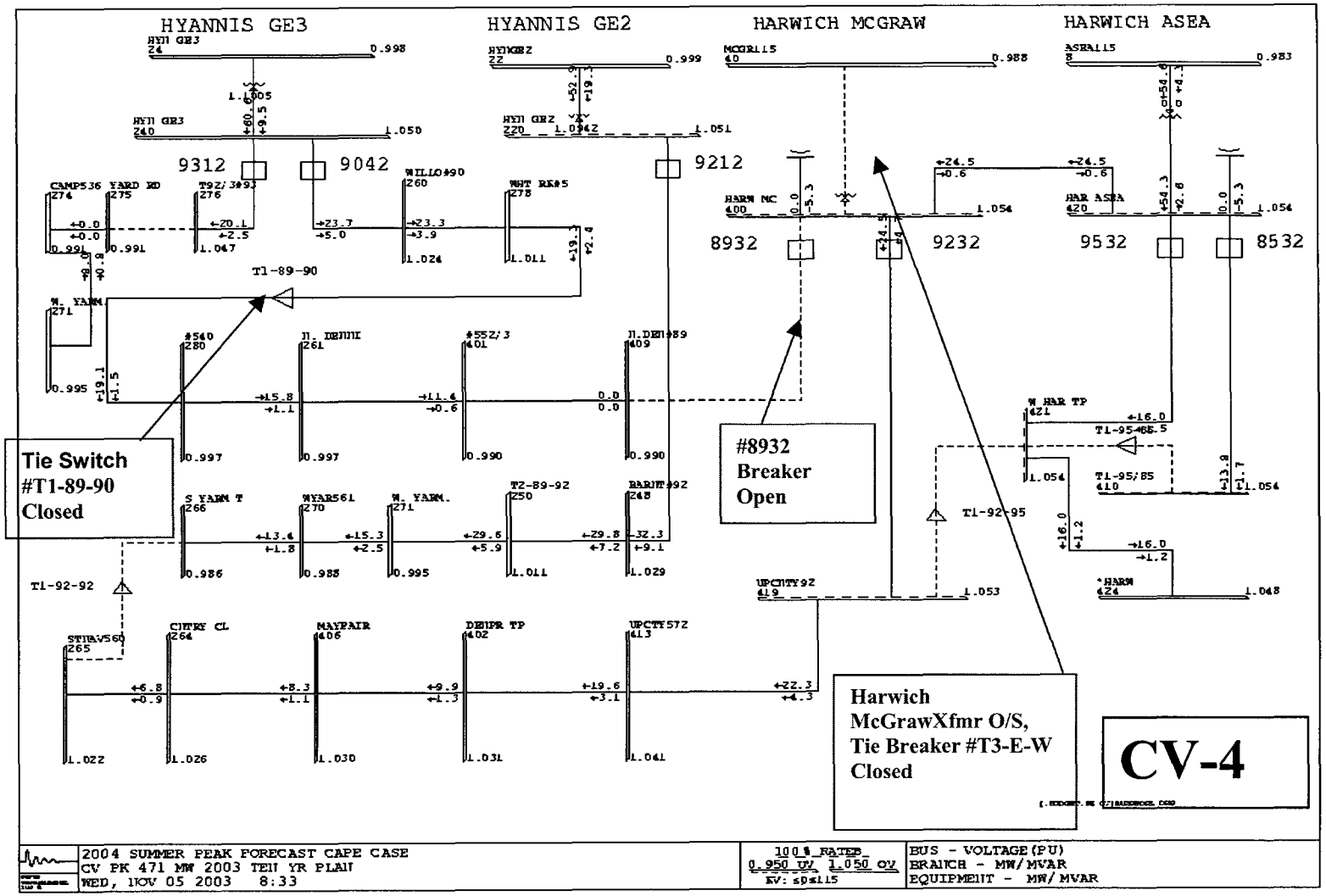
HYANNIS GE3
HYANNIS GE2
HARWICH MCGRAW
HARWICH ASEA
9312
9042
9212
8932
9232
9532
8532
T1-89-90
Tie Switch
#T1-89-90
Closed
#8932
Breaker
Open
T1-92-92
T1-92-95
T1-95-85
Harwich
McGrawXfmr O/S,
Tie Breaker #T3-E-W
Closed
CV-4
2004 SUMMER PEAK FORECAST CAPE CASE
CV PK 471 MW 2003 TEN YR PLAN
WED, NOV 05 2003 8:33
100% RATED
0.950 UV 1.050 OV
KV: 50<115
BUS - VOLTAGE (PU)
BRANCH - MW/MVAR
EQUIPMENT - MW/MVAR

2003 5/10 Year Plan - Year 2004 DSS Line Load Transfers - Cape & Vineyard District

BULK SUBSTATION DSS LINE SINGLE-CONTINGENCY ANALYSIS

* Coincident Feeder peaks at Forecasted Summer 2004 District Peaks
* Switching Sequences and Effects of Load Transfer Under Coincident Peak Conditions

CIRCUIT NUMBER	COINCIDENT PEAK LOAD (MW)	(MX)	(MVA)	NUMBER CUSTOMERS	BACKUP CIRCUIT	BACKUP STATION	SWITCHING ACTIONS	BACKUP CIRCUIT LOAD (BEFORE TRANSFER) (MW)	(MX)	(MVA)	BACKUP CIRCUIT LOAD (AFTER TRANSFER) (MW)	(MX)	(MVA)	BACKUP CIRCUIT SCADA LIMITS NORMAL (MVA)	LTE (MVA)	STE (MVA)	TRIP (MVA)	PROBLEM AREAS
Harwich Substation																		
89	15 9	2 2	16 1	9221		90 Hyannis	CLOSE T1-89-90 OPEN 8932	7 3	1 1	7.4	23 7	5 0	24 2	30	32	34	38	Not affected by Orleans 89 reconfiguration
92, 95, 85 DSS Contingencies, POST Orleans 89 Reconfiguration																		
92	24 4	4.7	24 8	11823		95 Harwich	CLOSE T1-92-95 OPEN 9232 CLOSE 1197C	16 0	1 6	16 1	40 4	6 3	40.9	27	34	36	38	95 CKT Flow Exceeds SCADA LTE and Tnp Field Check
	OR:					92 Hyannis	OPEN 9232 CLOSE T1-92-92 CLOSE 1234C	32 3	9 1	33 6	39 6	12 9	41 6	34	36	36	38	92 CKT Flow Exceeds SCADA LTE and Tnp
	AND:					90 Hyannis via 89	OPEN 8966 OPEN 9268 CLOSE T1-89-92 CLOSE T1-89-90	7 3	1 1	7 4	31 5	11 7	33 6	30	32	34	38	90 CKT Flow Exceeds SCADA LTE 90 CKT Flow 26% > 18 MVA LTE for 477 ACSR conductor 92 CKT voltages down to 0 86 per unit
95	16 0	1 6	16 1	13924		92 Harwich	CLOSE T1-92-95 OPEN 9532 CLOSE 1187C	24 4	4 7	24 8	40 4	6 3	40.9	32	34	36	38	92 CKT Flow Exceeds SCADA LTE and Tnp Field Check
	OR					95 Orleans	CLOSE T1-95-95 OPEN 9532 BKR CLOSE 1184C	16 0	1 6	16 1	36 6	11 5	38.4	32	34	36	38	95 CKT Flow Exceeds SCADA LTE and Tnp Field Check
85	13 8	1 7	13 9	4156		95 Harwich	CLOSE T1-85-95 OPEN 8532	16 0	1 6	16 1	29 8	3 3	30 0	27	34	36	38	

2004 T&D OPERATING STUDY
Cape & Vineyard District

HATCHVILLE SUBSTATION #936

Hatchville Substation #936 serves a power supply area consisting of all or portions of the Towns of Falmouth, Bourne, and Mashpee. During the summer of 2003, peak station load coincident with Cape District on 8/16/03 20:00 hours was 33.0 MVA.

Hatchville Substation #936 consists of one115/23.0 kV transformer:

#115: Magnetek 30/40/50 [56] MVA 115/23.0 kV

Overload Ratings:

Transformer	Nameplate	Summer Normal Rating No Loss of Life	Summer 12 Hour LTE Rating 1% Loss of Life
#115	30/40/50 [56] MVA	59 MVA	64 MVA

Station Capabilities:

Total Station Capacity (N-0) Normal Ratings	Station Firm Capacity (N-1) LTE Ratings	Load Transfers (MVA)	Total LCC (LTE + Transfers)
59 MVA	0 MVA	34.0 MVA	34.0 MVA

Station Load Forecast:

2004	2005	2006	2007	2008
34.2 MW	34.9 MW	35.5 MW	36.1 MW	36.8 MW

Switching Actions:

Loss of #115 Magnetek Transformer

Open: Circuit Switcher 11533 (at Hatchville)
Main circuit breaker 11532 (at Hatchville)
Feeder Breaker #7712 (at Hatchville)
Feeder Breaker #9812 (at Hatchville)
Feeder Breaker #7812 (at Hatchville)
Feeder Breaker #8152 (at Otis) *

Close: Tie Switch #T1-77-77 (to Mashpee)
Tie Switch #T1-81-81 (Otis to Sandwich) *
Tie Switch #T1-98-98 (to Falmouth)
Tie Switch #T2-406-409 (ties #78 feeder to Otis #86 feeder) **

Capacitor Bank breaker 1075c (at Otis)
Capacitor Bank breaker 1156c (at Mashpee)

(MORE)↓

*Transfer Otis #81 Line to Sandwich BEFORE tying the Hatchville #78 Line to the Otis #86 Line.

** DO NOT USE the 79 / 78 DSS line tie switch #7872 at the Otis Air Base Sub to perform this transfer. You will overload 7.8 miles of 1/0 copperweld 23kV conductor on the #79 line, which is a government-owned DSS feeder.

Distribution Feeder Switching:

For either transformer outage, Otis Substation #936 transformer, Mashpee Substation #946 transformer, and Sandwich Substation #916 transformer carry full station load of 34.2 MW.

The Otis Substation #936 transformer will be loaded to 31.7 MVA, 96.2% of its 33 MVA Summer LTE Rating. No other load transfer capability exists to reduce load on the station.

Contingency backup of each of the three (3) 23kV Hatchville DSS feeders can be accomplished, and the transfers and switching operations required to back each feeder up are shown on the attached table.

Total Transfer: 34.0 MVA

Summary of Concerns: Hatchville Substation #936

Station:

Based on load projections, Hatchville Substation #936 has adequate firm capability through load forecast year 2005 for a contingency outage of the Magnetek 30/40/50 MVA transformer bank. Please reference power flow diagrams **CV-5** through **CV-7**.

The limiting element that arises in forecast year 2005 during the load transfer, the Otis 16/21/26 [28] MVA transformer, has been proposed for upgrade to a 30/40/50 [56] MVA bank by Summer 2005.

Also, during the load transfer of the Hatchville #78 line by tying to the Otis #86 line, the transfer must be made through the underlying 23kV distribution system through the #406 and #409 circuits in the Clay Pond Road area by feeding reclosers backwards, which may defeat the system protection that they offer. The installation of bypass switches to bypass the reverse-fed recloser has been proposed to prevent this problem.

Transmission:

From a station capacity perspective, contingency outages of either the #115 115kV line is not generally problematic at Hatchville Substation #936. Loss of the 115kV line is identical in performance to the single contingency outage of the Hatchville substation transformer that it serves.

Loss of the #115 line, if it also affects Falmouth Substation #933, and Mashpee Substation #946, which would result in the outage of three (3) 23kV transformer banks, may require load shedding, and is discussed further under the #115 line outage at *Bulk Transmission Facility Outages*.

DSS/Distribution:

Of the three (3) 23kV DSS lines served out of Hatchville Substation #936, none are thermally or voltage-limited during contingency backup from adjacent stations. Please refer to contingency switching on the attached Table.

5kV Class Substation and Distribution:

Hatchville Substation #936 feeds two (2) distribution substations of various primary voltages:

- N. Falmouth Substation #967 23/4.8kV delta
- Waquoit Substation #970 23/4.8kV delta

The table below summarizes the capacity of these distribution stations versus forecasted Summer peak loads:

5kV Transformer	Normal Rating	2004 Projection	2008 Projection
N. Falmouth 4.8kV	2.50 MVA	**2.3 MVA**	**2.5 MVA**
Waquoit 4.8kV	2.50 MVA	**2.3 MVA**	**2.5 MVA**

Proposed Integrated Plan:

The suggested actions table listed below will address all of the capacity concerns in the Hatchville Substation #936 power supply area.

Starting at the Summer 2005 load forecast year, a contingency outage of the Hatchville #936 30/40/50 MVA transformer bank will overload the Otis Substation #915 16/21/26 MVA transformer bank beyond its 33 MVA LTE rating. An upgrade of the Otis Substation transformer to a new 30/40/50 MVA unit is proposed, at an estimated cost of $1.5M.

The existing 16/21/26 MVA transformer bank at Otis would then be used for replacing the 12/16/20 MVA bank at the Valley Substation #715 in the Plymouth District, as described at *Valley Substation #715*, and *Wareham Substation #714*.

Contingency backup of the Hatchville #78 line by tying to the Otis #86 line will require the installation of bypass switches around reclosers on the #406/#409 distribution circuits, at an estimated cost of $20k.

Recommended course of action for Hatchville Substation #936

Action	Year needed	Estimated Cost
⇒ Upgrade Otis Substation #915 transformer to new 30/40/50 MVA unit	2005	TBD
⇒ Install bypass switches on reclosers #406/409 circuits	2004	$20K

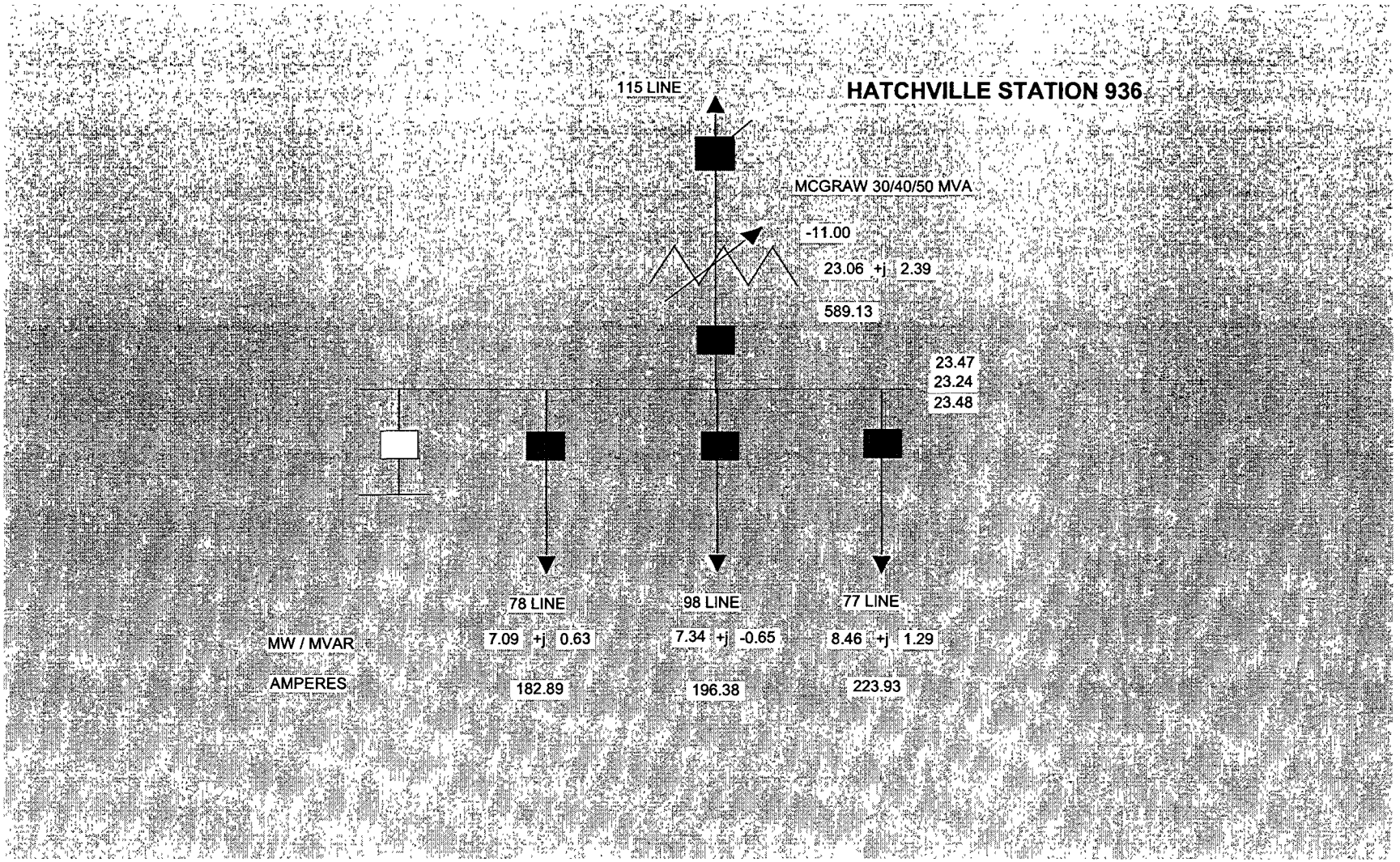
HATCHVILLE STATION 936
115 LINE
MCGRAW 30/40/50 MVA
-11.00
23.06 +j 2.39
589.13
23.47
23.24
23.48
78 LINE
98 LINE
77 LINE
MW / MVAR
7.09 +j 0.63
7.34 +j -0.65
8.46 +j 1.29
AMPERES
182.89
196.38
223.93

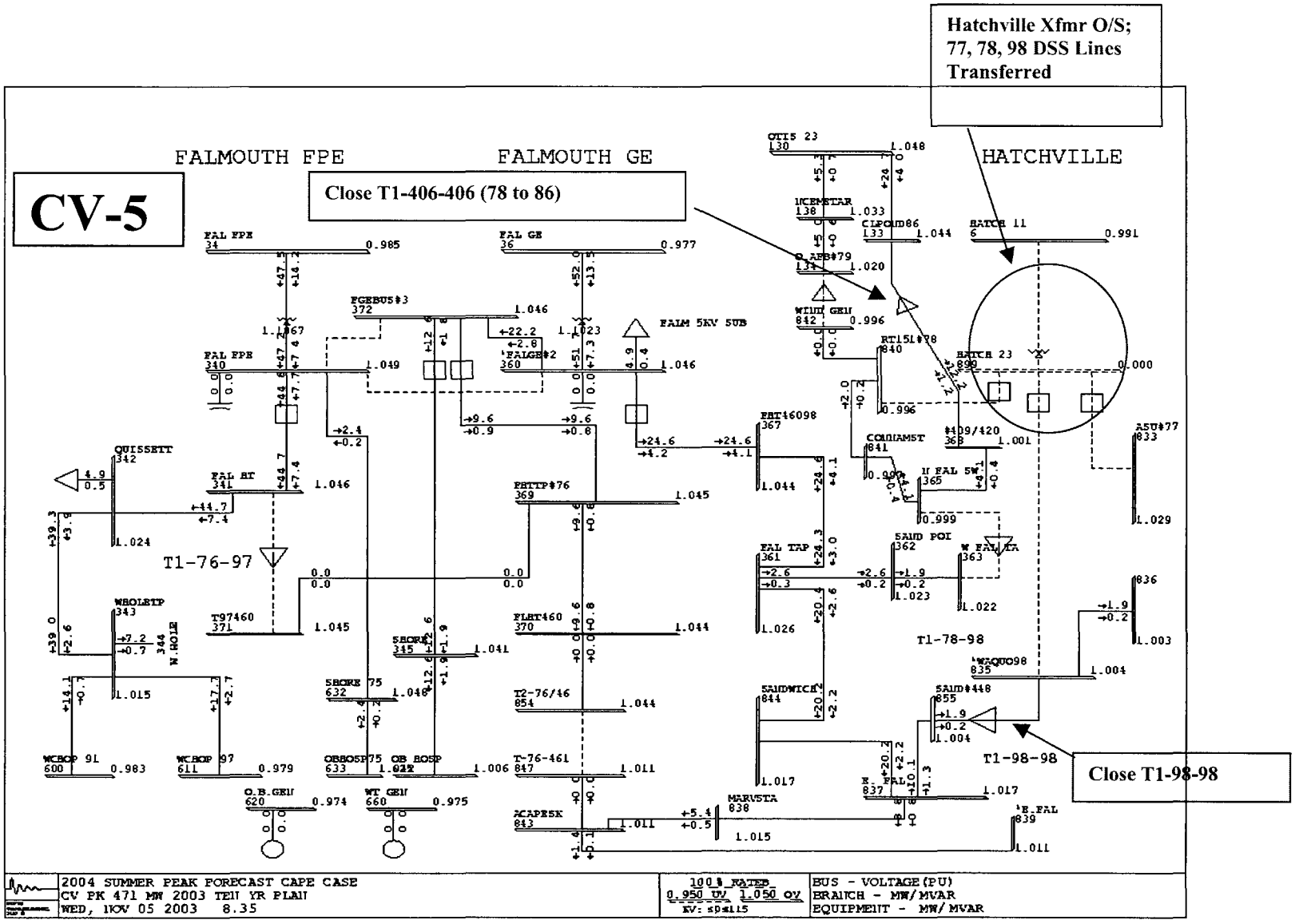
Hatchville Xfmr O/S; 77, 78, 98 DSS Lines Transferred
CV-5
FALMOUTH FPE
FALMOUTH GE
HATCHVILLE
Close T1-406-406 (78 to 86)
T1-76-97
T1-78-98
T1-98-98
Close T1-98-98
2004 SUMMER PEAK FORECAST CAPE CASE
CV PK 471 MW 2003 TEIT YR PLAIT
WED, 1KOV 05 2003 8.35
100% RATED
0.950 UV 1.050 OV
KV: 69&115
BUS - VOLTAGE(PU)
BRAICH - MW/MVAR
EQUIPMEIT - MW/MVAR

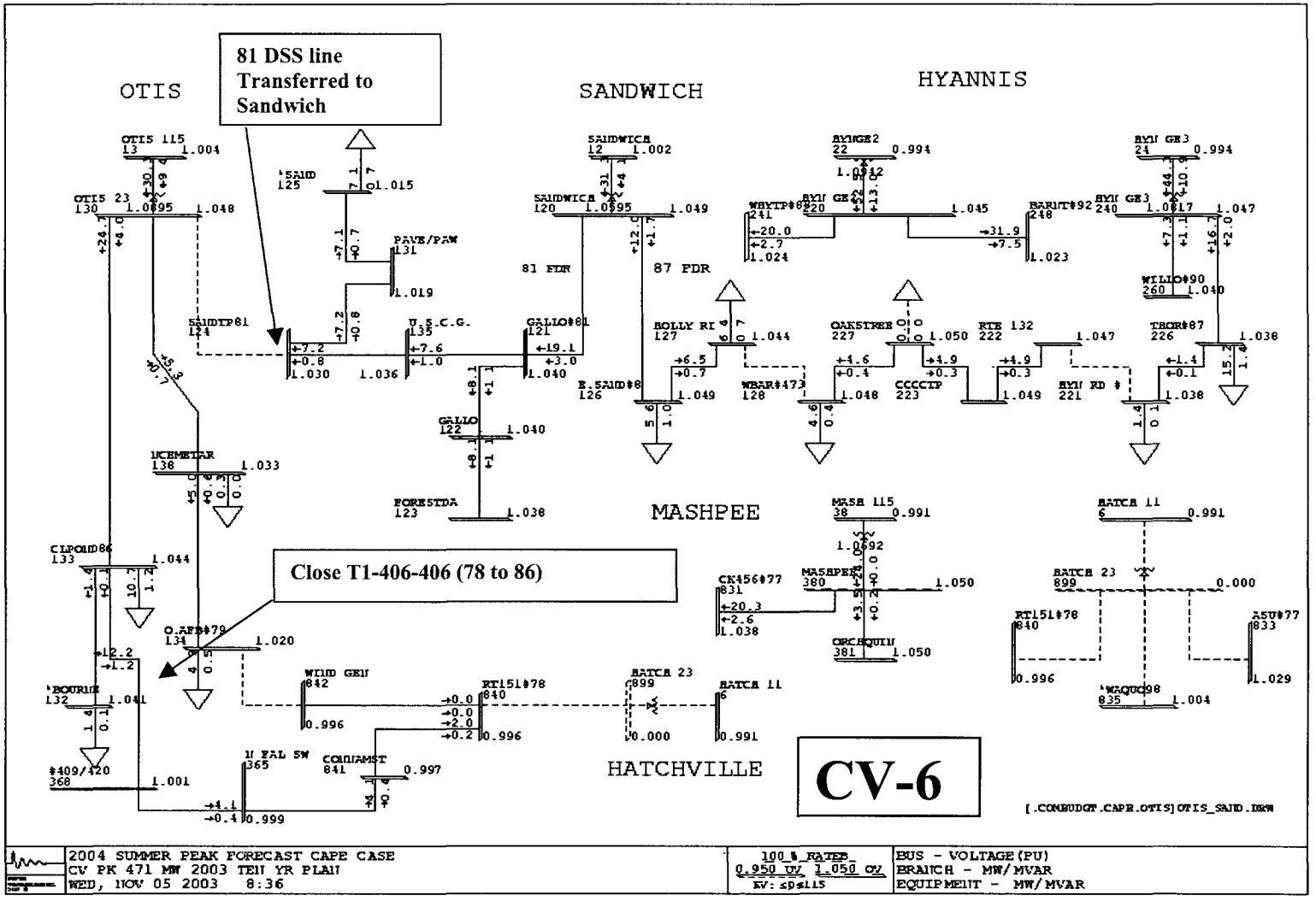
81 DSS line Transferred to Sandwich
OTIS
SANDWICH
HYANNIS
MASHPEE
HATCHVILLE
Close T1-406-406 (78 to 86)
CV-6
2004 SUMMER PEAK FORECAST CAPE CASE
CV PK 471 MW 2003 TEN YR PLAN
WED, NOV 05 2003 8:36
100 % RATED
0.950 UV 1.050 OV
KV: 69&115
BUS - VOLTAGE (PU)
BRANCH - MW/MVAR
EQUIPMENT - MW/MVAR

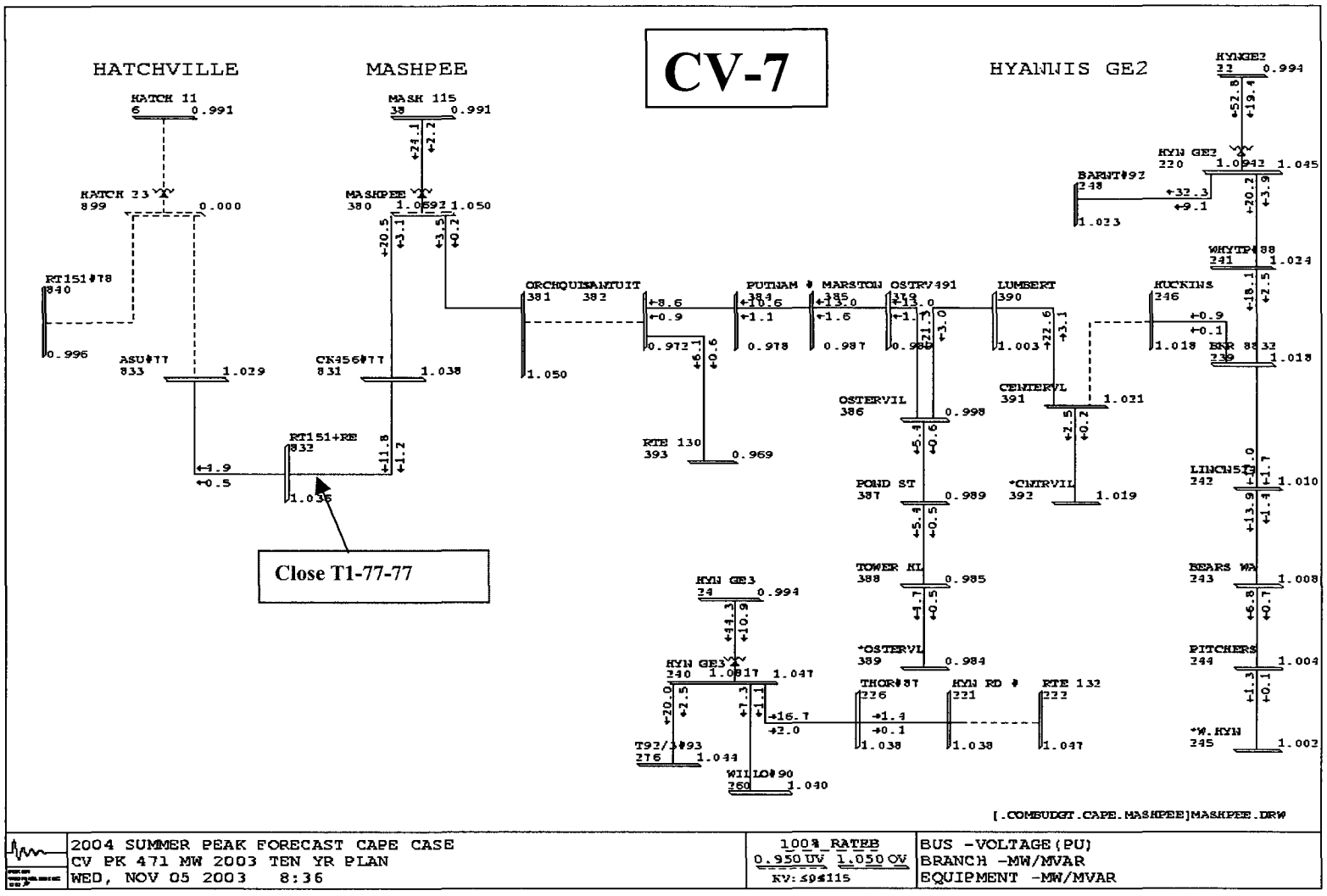
CV-7
HATCHVILLE
MASHPEE
HYANNIS GE2
Close T1-77-77
[.COMBUDGT.CAPE.MASHPEE]MASHPEE.DRW
2004 SUMMER PEAK FORECAST CAPE CASE
CV PK 471 MW 2003 TEN YR PLAN
WED, NOV 05 2003 8:36
100% RATEB
0.950 UV 1.050 OV
KV: ≤9≤115
BUS -VOLTAGE(PU)
BRANCH -MW/MVAR
EQUIPMENT -MW/MVAR

2003 5/10 Year Plan - Year 2004 DSS Line Load Transfers - Cape & Vineyard District

BULK SUBSTATION DSS LINE SINGLE-CONTINGENCY ANALYSIS

* Coincident Feeder peaks at Forecasted Summer 2004 District Peaks
* Switching Sequences and Effects of Load Transfer Under Coincident Peak Conditions

CIRCUIT NUMBER	COINCIDENT PEAK LOAD (MW)	(MX)	(MVA)	NUMBER CUSTOMERS	BACKUP CIRCUIT	BACKUP STATION	SWITCHING ACTIONS	BACKUP CIRCUIT LOAD (BEFORE TRANSFER) (MW)	(MX)	(MVA)	BACKUP CIRCUIT LOAD (AFTER TRANSFER) (MW)	(MX)	(MVA)	BACKUP CIRCUIT SCADA LIMITS NORMAL (MVA)	LTE (MVA)	STE (MVA)	TRIP (MVA)	PROBLEM AREAS
Hatchville Substation																		
77	11.9	1.5	12.0	4135		77 Mashpee	CLOSE T1-77-77	8.5	1.3	8.6	20.5	3.1	20.7	27	34	34	38	
							OPEN 7712											
						88W Oak Street	CLOSE T1-88-88	18.0	2.5	18.2	22.4	3.4	22.7	TO BE DETERMINED				
							OPEN 9986											
78	12.2	1.6	12.3	5086		98 Falmouth GE	CLOSE T1-78-89	14.2	1.8	14.3	27.0	5.1	27.5	27	28	30	32	
							OPEN 7812											
98	10.0	1.1	10.1	5653		98 Falmouth GE	CLOSE T1-98-98	14.2	1.8	14.3	24.6	4.1	24.9	27	28	30	32	
							OPEN 9812											

2004 T&D OPERATING STUDY
Cape & Vineyard District

HYANNIS JUNCTION SUBSTATION #961

Hyannis Junction Substation #961 serves a power supply area consisting of all or portions of the Towns of Barnstable and Yarmouth (including: Hyannis, W. Barnstable, Marstons Mills, Hyannis Port, Craigville, Yarmouth Port, W. Yarmouth, and Bass River). During the summer of 2003, peak station load coincident with Cape District on 8/16/03 20:00 hours was 84.2 MVA.

Hyannis Junction Substation #961 consists of two 115/23.0 kV transformers:

#123: General Electric 45/65/75 [84] MVA 115/23.0 kV
#124: General Electric 30/40/50 [56] MVA 115/23.0 kV

Overload Ratings:

Transformer	Nameplate	Summer Normal Rating No Loss of Life	Summer 12 Hour LTE Rating 1% Loss of Life
#123	45/65/75 [84] MVA	87 MVA	95 MVA
#124	30/40/50 [56] MVA	59 MVA	64 MVA

Station Capabilities:

Total Station Capacity (N-0) Normal Ratings	Station Firm Capacity (N-1) LTE Ratings	Load Transfers (MVA)	Total LCC (LTE + Transfers)
146 MVA	64 MVA	45.0 MVA	109 MVA

Station Load Forecast:

2004	2005	2006	2007	2008
100.3 MW	101.7 MW	103.0 MW	104.5 MW	106.1 MW

Switching Actions:

Loss of #123 Transformer

Open: Circuit Switcher 12343
Main circuit breaker 12342
Feeder Breaker #9042 (at Hyannis)
Feeder Breaker #8412 (at Hyannis)
Feeder Breaker #8212 (at Hyannis)
Feeder Breaker #8752 (at Sandwich)
Switch #8259 (#82 line W. of Lumberts Mill Road Tap)

Close: Hyannis 23kV bus tie breaker #T1-E-W
* Tap changers must be in same position, and off.

Tie Switch #T1-89-90 (transfer #90 Line to Harwich McGraw)
Tie Switch #T1-84A-84B (transfer #84 Line to Oak Street #920)
Tie Switch #T1-82A-82B (transfer #82 Line to Oak Street #920)
Tie Switch #T1-82A-88 (transfer portion of #82 Line to Mashpee #88 Line)
Tie Switch #T1-87A-87B (transfer #87 Line from Oak Street to Sandwich)

Capacitor Bank breakers 1234c and 1244c (Hyannis), 1187c (Harwich), 1222c (Oak Street)

Caution: The switching must be conducted in the order listed below. If the Hyannis 23kV tie breaker is closed before DSS lines are transferred to Oak Street and Harwich, the #124 bank will trip on overload. The switching to relieve Oak Street (by transferring load to Mashpee and Sandwich) must be conducted before transferring load from Hyannis to Oak Street.

Order of Switching:

1. Close Capacitor Bank Breakers at Hyannis, Harwich, and Oak Street:
   Close: 1234c, 1244c, 1187c, 1222c

2. Transfer Hyannis #90 Line to Harwich #89 Line:
   Open: #9042 Close: T1-89-90

3. Transfer Oak Street #87 Line to Sandwich #87 Line:
   Open: #8752 Close T1-87A-87B

4. Transfer Hyannis #84 Line to Oak Street #84 Line:
   Open# 8412 Close T1-84A-84B

5. Transfer portion of Oak Street #82 Line to Mashpee #88 Line:
   Open: Sw. 8259 W. of Lumberts Mill Rd. Close: T1-82A-88 (Osterville Tap)

6. Transfer Hyannis #82 Line to Oak Street #82 Line:
   Open: #8212 Close: T1-82A-82B

7. Transfer portion of Hyannis #92 Line to Harwich #92 Line:
   Open: Sw. #9209 (W. of 561 Ckt. Tap) Close: T1-92-92 (on ROW to Harwich)

8. Close: Hyannis 23kV bus tie breaker #T1-E-W

Loss of #124 Transformer

Open: Circuit Switcher 12443
Main circuit breaker 12442
Feeder Breaker #8412 (at Hyannis)
Feeder Breaker #8212 (at Hyannis)
Feeder Breaker #8752 (at Sandwich)
Switch #8259 (#82 line W. of Lumberts Mill Road Tap)

Close: Hyannis 23kV bus tie breaker #T1-E-W
* Tap changers must be in same position, and off.
Tie Switch #T1-84A-84B (transfer #84 Line to Oak Street #920)
Tie Switch #T1-82A-82B (transfer #82 Line to Oak Street #920)
Tie Switch #T1-82A-88 (transfer portion of #82 Line to Mashpee #88 Line)
Tie Switch #T1-87A-87B (transfer #87 Line from Oak Street to Sandwich)
Capacitor Bank breakers 1234c and 1244c (Hyannis), 1187c (Harwich), 1222c (Oak Street)

Caution: The switching must be conducted in the order listed below. If the Hyannis 23kV tie breaker is closed before DSS lines are transferred to Oak Street, the 49 MVA LTE rating of the bus tie breaker will be exceeded.

The switching to relieve Oak Street (by transferring load to Mashpee and Sandwich), must be conducted before transferring load from Hyannis to Oak Street.

Order of Switching:

1. Close Capacitor Bank Breakers at Hyannis and Oak Street:
   Close: 1234c, 1244c, 1222c

2. Transfer Oak Street #87 Line to Sandwich #87 Line:
   Open: #8752 Close T1-87A-87B

3. Transfer Hyannis #84 Line to Oak Street #84 Line:
   Open# 8412 Close T1-84A-84B

4. Transfer portion of Oak Street #82 Line to Mashpee #88 Line:
   Open: Sw. 8259 W. of Lumberts Mill Rd. Close: T1-82A-88 (Osterville Tap)

5. Transfer Hyannis #82 Line to Oak Street #82 Line:
   Open: #8212 Close: T1-82A-82B

6. Close: Hyannis 23kV bus tie breaker #T1-E-W

Distribution Feeder Switching:

For either transformer outage, remaining Hyannis Junction Substation #961 transformer and substation transformers at Oak Street Substation #920, Sandwich Substation #916, Mashpee Substation #946, and Harwich Substation #968, carry full station load of 100.3 MW.

Contingency backup of each of the five (5) 23kV Hyannis Junction DSS feeders can be accomplished, and the transfers and switching operations required to back each feeder up are shown on the attached table.

Some identified limitations in DSS line transferability are listed below under *Summary of Concerns, Distribution.*

Total Transfer: 45.0 MVA

Summary of Concerns: Hyannis Junction Substation #961

Station:

Based on load projections, Hyannis Junction Substation #961 has adequate firm capability through load forecast year 2013 for a contingency outage of either transformer bank. Please reference power flow diagrams **CV-8** through **CV-11**.

Transmission:

From a station capacity perspective, contingency outages of either the #124 or #123 115kV lines is not generally problematic at Hyannis Junction Substation #961. Loss of either 115kV line is identical

in performance to the single contingency outage of the Hyannis Junction substation transformer that it serves.

Loss of the #124 line, if it also affects Orleans Substation #975, and Wellfleet Substation #976 (by way of trip of the #125 line), which would result in the outage of three (3) 23kV transformer banks, may require load shedding, and is discussed further under the #124 line outage at *Bulk Transmission Facility Outages*.

Loss of the #123 line, if it also affects Orleans Substation #975, and Hyannis Junction Substation #958 (by way of trip of the #123 line), which would result in the outage of three (3) 23kV transformer banks, may require load shedding, and is discussed further under the #123 line outage at *Bulk Transmission Facility Outages*.

DSS/Distribution:

1. Oak Street Substation #961 #82 Line may reach 39.7 MVA, which is 111% of 36 MVA LTE rating for contingency backup of Hyannis Junction #82 Line. SCADA Alarm and LTE rating is erroneously set too high at 50 MVA Phase conductor is 477 ACSR, capable of 36 MVA LTE rating. There is a proposed project to upgrade 1.9 miles of the #82 line (formerly the #518 circuit) from Oak Street Substation #920 to the vicinity of Centerville Substation tap.

2. Harwich Substation #961 #92 Line may reach 50.4 MVA, which is 148% of 34.0 MVA SCADA LTE rating and in excess of 38 MVA trip setting for contingency backup of Hyannis Junction #92 Line. Phase conductor at Harwich is 795 ACSR, capable of 49 MVA LTE rating, readjusting SCADA alarm and trip settings is recommended. With regard to the actual 49 MVA LTE rating for the conductor, post-contingency flow would be 3% over the LTE rating.

3. Contingency backup of the Hyannis Substation #961 #93 DSS Line requires load transfers to both the Hyannis #92 Line and the Harwich #92 Line.

Post contingency and post transfer, load on the Hyannis #92 Line is 39.0 MVA, 14% over 34 MVA SCADA LTE rating, and in excess of 38 MVA trip setting. Phase conductor at Hyannis on the #92 line is 795 ACSR, capable of 49 MVA LTE rating, readjusting SCADA alarm and trip settings is recommended.

Post contingency and post transfer, load on the Harwich #92 Line is 42.2 MVA, 24% over 34 MVA SCADA LTE rating, and in excess of 38 MVA trip setting. Phase conductor at Harwich on the #92 line is 795 ACSR, capable of 49 MVA LTE rating, readjusting SCADA alarm and trip settings is recommended.

Contingency backup of 23kV DSS feeders #84 and #90 are not problematic from a thermal or voltage performance standpoint.

Please refer to contingency switching on the attached Table.

23.0 kV Feeder	Backup Circuit	Summer LTE Rating in MVA	Projected % of LTE 2004	Projected % of LTE 2008
Hyannis Junction #82	Oak Street #82	50 (SCADA)	**79%**	**85%**
		36 (477 ACSR)	111%	118%
Hyannis Junction #92	Harwich #92	34 (SCADA)	148%	176%
		49 (795 ACSR)	103%	122%
Hyannis Junction #93	Hyannis Junction #92	34 (SCADA)	114%	124%
		49 (795 ACSR)	**79%**	**87%**
	Harwich #92	34 (SCADA)	124%	132%
		49 (795 ACSR)	**86%**	**91%**

5kV Class Substation and Distribution:

Hyannis Junction Substation #961 feeds three (3) distribution substations of various primary voltages:

- Hyannis Distribution Substation #912 23/4.16kV wye
- W. Hyannis Substation #943 23/4.16kV wye
- Barnstable Substation #940 23/4.16kV wye

The table below summarizes the capacity of these distribution stations versus forecasted Summer peak loads:

5kV Transformer	Normal Rating	2004 Projection	2008 Projection
Hyannis 4.16kV	5.00 MVA	**3.5 MVA**	**3.7 MVA**
W. Hyannis 4.16kV	2.50 MVA	**1.7 MVA**	**1.8 MVA**
Barnstable 4.16kV	2.50 MVA	**2.2 MVA**	**2.3 MVA**

Proposed Integrated Plan:

The suggested actions table listed below will address all of the capacity concerns in the Hyannis Junction Substation #961 power supply area.

The Oak Street #82 23kV DSS line exceeds 36 MVA LTE rating for 477 ACSR conductor for a contingency backup of the Hyannis #82 DSS line. This situation is also discussed under *Mashpee Substation #946*, for contingency backup of the #88 line from that station. The upgrade of 1.9 miles of 477 ACSR conductor from Oak Street Substation #920 to the tap on right-of-way near Centerville Substation tap to 795 ACSR conductor is proposed, at an estimate cost of $350k in 2004.

Two (2) 23 kV DSS line overloads (beyond existing SCADA alarm and trip settings occur during post-contingency load transfers of the Hyannis Junction #92 and #93 DSS lines. Existing conductor rating for 795 ACSR (49 MVA LTE) is not exceeded; the SCADA alarm limits and trip settings should be investigated and updated.

Recommended course of action for Hyannis Junction Substation #961

Action	Year needed	Estimated Cost
⇒ Increase SCADA Alarm and Trip settings on #92 and #95 DSS Lines	2004	$0
⇒ Upgrade 2.9 miles of 336 ACSR conductor to 795 ACSR Oak Street #82 line	2004	$350k

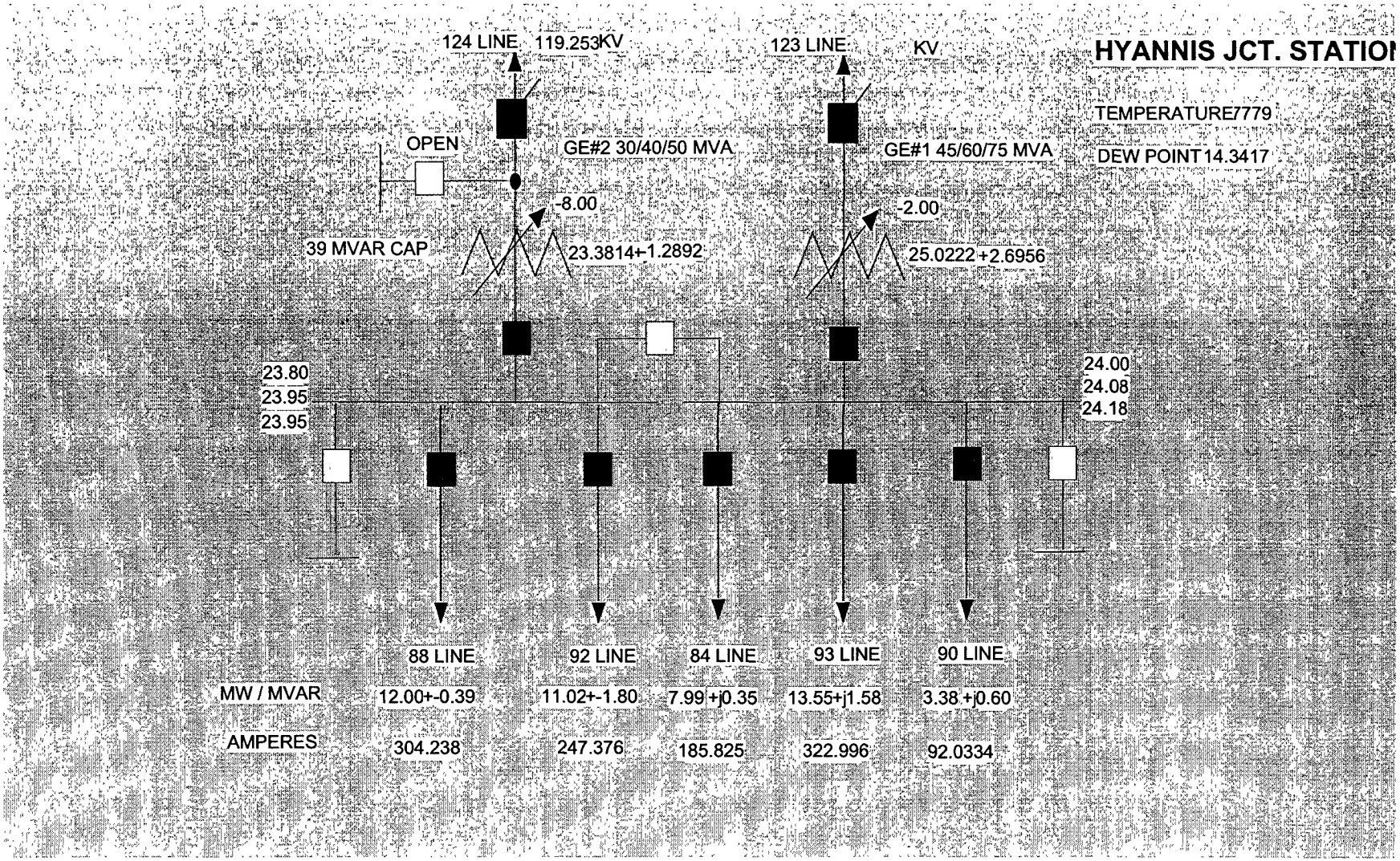
HYANNIS JCT. STATIOI
124 LINE 119.253KV
123 LINE KV
TEMPERATURE7779
DEW POINT14.3417
OPEN
GE#2 30/40/50 MVA
GE#1 45/60/75 MVA
-8.00
-2.00
39 MVAR CAP
23.3814+1.2892
25.0222+2.6956
23.80
23.95
23.95
24.00
24.08
24.18
88 LINE
92 LINE
84 LINE
93 LINE
90 LINE
MW / MVAR
12.00+-0.39
11.02+-1.80
7.99+j0.35
13.55+j1.58
3.38+j0.60
AMPERES
304.238
247.376
185.825
322.996
92.0334

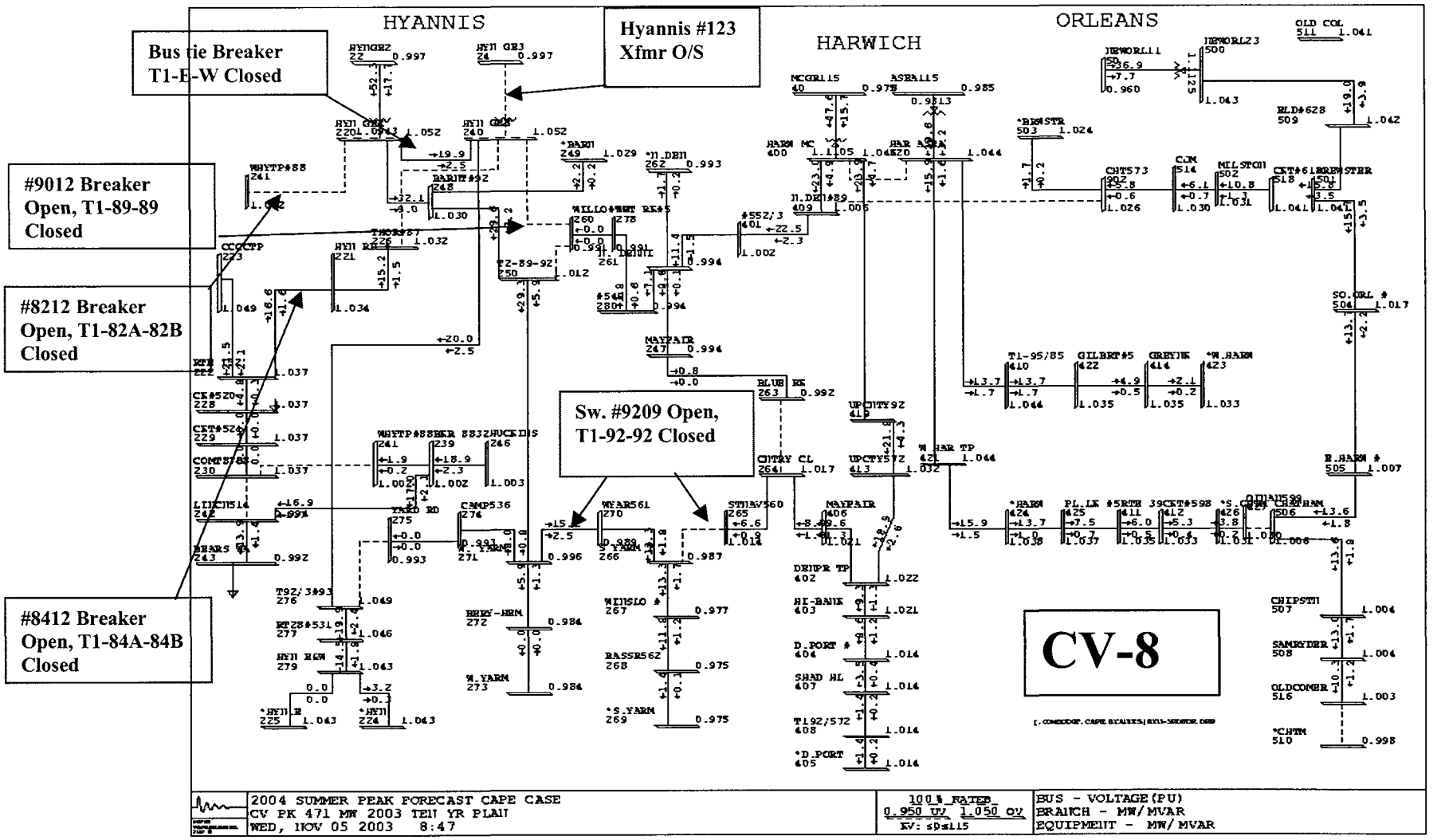
Bus tie Breaker T1-E-W Closed
Hyannis #123 Xfmr O/S
#9012 Breaker Open, T1-89-89 Closed
#8212 Breaker Open, T1-82A-82B Closed
Sw. #9209 Open, T1-92-92 Closed
#8412 Breaker Open, T1-84A-84B Closed
HYANNIS
HARWICH
ORLEANS
CV-8
2004 SUMMER PEAK FORECAST CAPE CASE
CV PK 471 MW 2003 TEN YR PLAN
WED, NOV 05 2003 8:47
100% RATED
0.950 UV 1.050 OV
KV: 5D≤115
BUS - VOLTAGE(PU)
BRANCH - MW/MVAR
EQUIPMENT - MW/MVAR

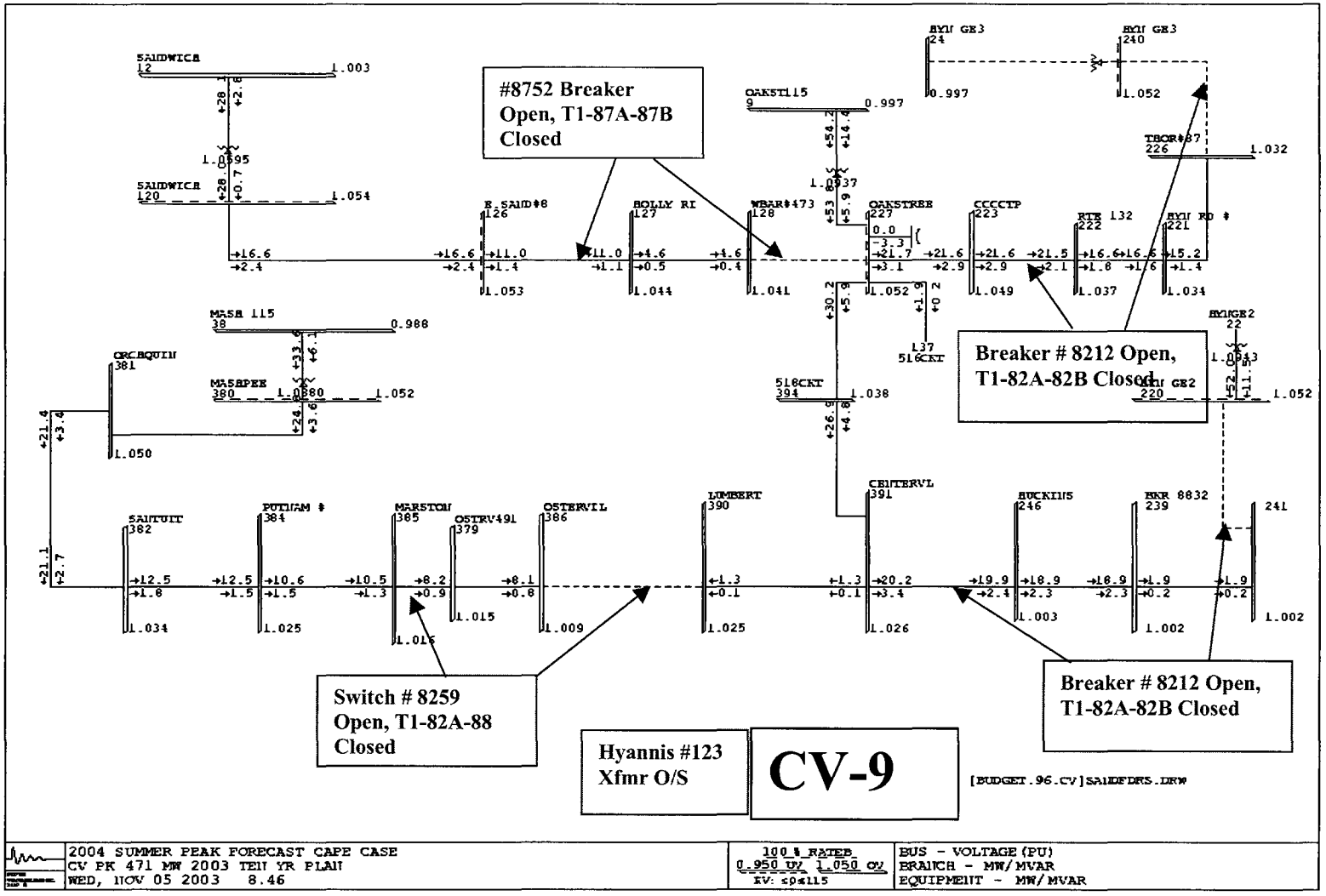
#8752 Breaker Open, T1-87A-87B Closed
Breaker # 8212 Open, T1-82A-82B Closed
Switch # 8259 Open, T1-82A-88 Closed
Breaker # 8212 Open, T1-82A-82B Closed
Hyannis #123 Xfmr O/S
CV-9
[BUDGET.96.CV]SANDFDRS.DRW
2004 SUMMER PEAK FORECAST CAPE CASE
CV PK 471 MW 2003 TEN YR PLAN
WED, NOV 05 2003 8.46
100 % RATED
0.950 UV 1.050 OV
KV: 69&115
BUS - VOLTAGE (PU)
BRANCH - MW/MVAR
EQUIPMENT - MW/MVAR

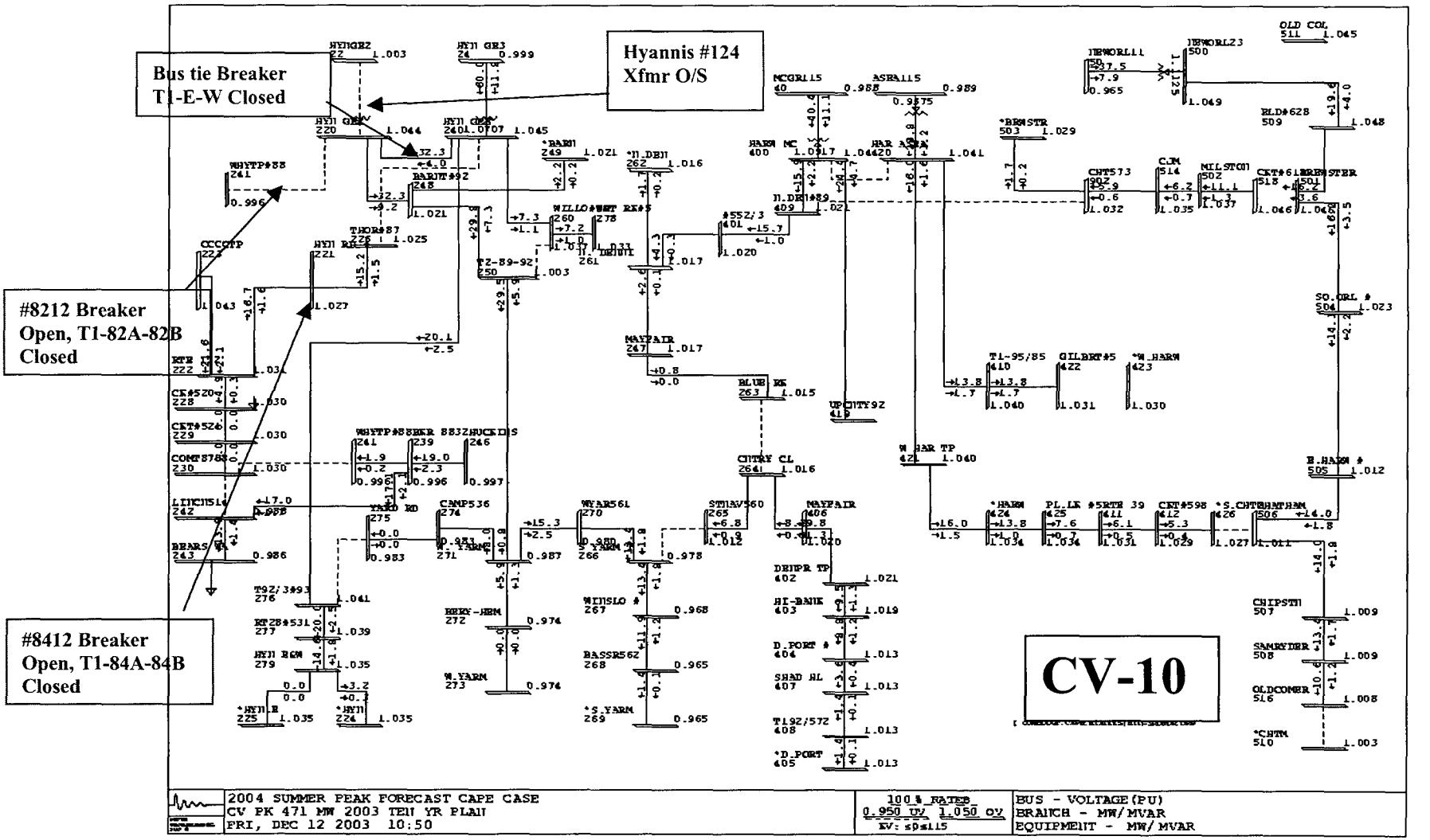
Bus tie Breaker
T1-E-W Closed
Hyannis #124
Xfmr O/S
#8212 Breaker
Open, T1-82A-82B
Closed
#8412 Breaker
Open, T1-84A-84B
Closed
CV-10
2004 SUMMER PEAK FORECAST CAPE CASE
CV PK 471 MW 2003 TEN YR PLAN
FRI, DEC 12 2003 10:50
100% RATES
0.950 UV 1.050 OV
KV: 50±115
BUS - VOLTAGE(PU)
BRANCH - MW/MVAR
EQUIPMENT - MW/MVAR

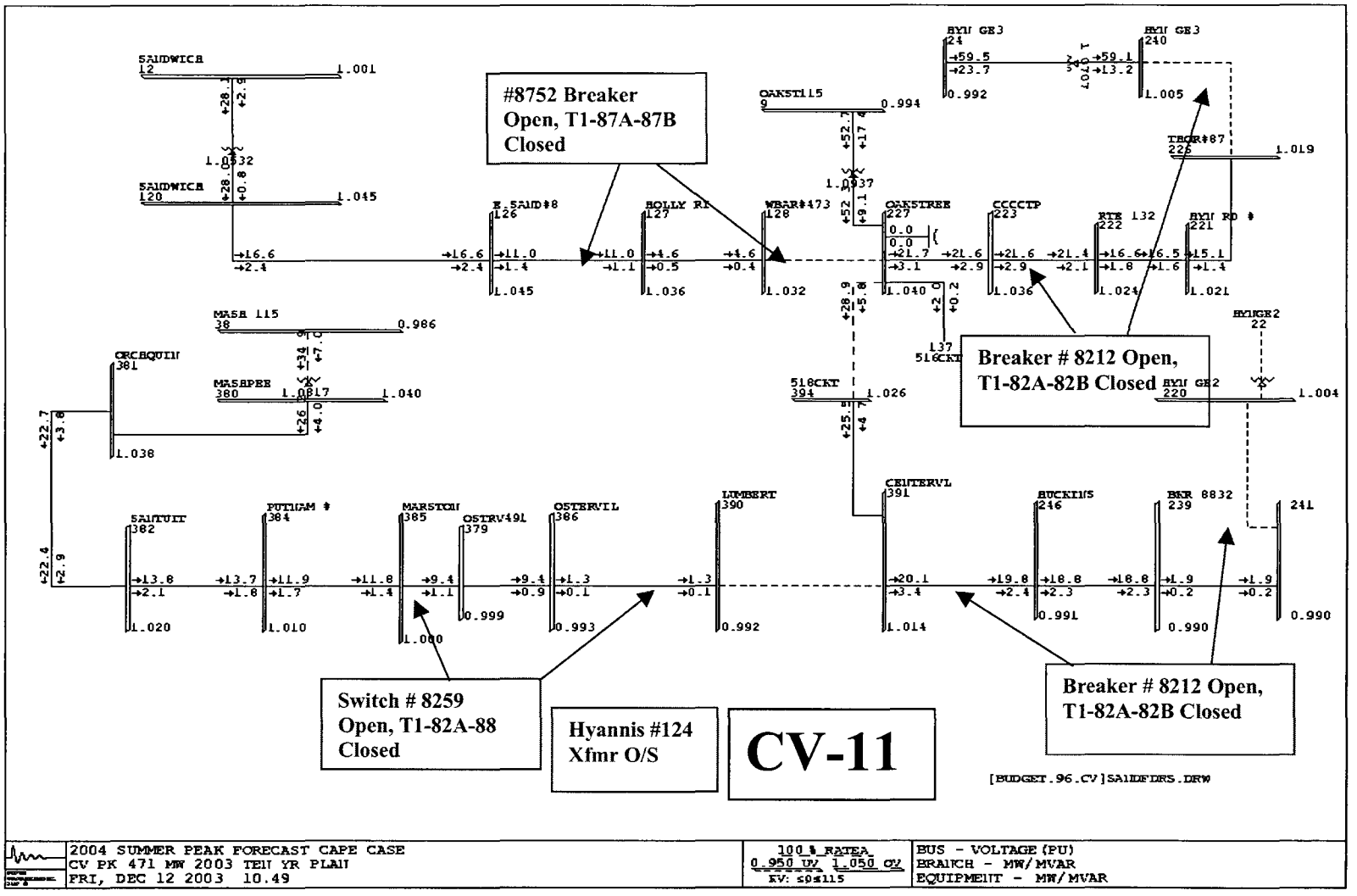
#8752 Breaker Open, T1-87A-87B Closed
Breaker # 8212 Open, T1-82A-82B Closed
Switch # 8259 Open, T1-82A-88 Closed
Hyannis #124 Xfmr O/S
Breaker # 8212 Open, T1-82A-82B Closed
CV-11
[BUDGET.96.CV]SA1DFDRS.DRW
2004 SUMMER PEAK FORECAST CAPE CASE
CV PK 471 MW 2003 TEN YR PLAN
FRI, DEC 12 2003 10.49
100% RATEA
0.950 UV 1.050 OV
KV: 50&115
BUS - VOLTAGE (PU)
BRANCH - MW/MVAR
EQUIPMENT - MW/MVAR

2003 5/10 Year Plan - Year 2004 DSS Line Load Transfers - Cape & Vineyard District

BULK SUBSTATION DSS LINE SINGLE-CONTINGENCY ANALYSIS

* Coincident Feeder peaks at Forecasted Summer 2004 District Peaks
* Switching Sequences and Effects of Load Transfer Under Coincident Peak Conditions

CIRCUIT NUMBER	COINCIDENT PEAK LOAD (MW)	(MX)	(MVA)	NUMBER CUSTOMERS	BACKUP CIRCUIT	BACKUP STATION	SWITCHING ACTIONS	BACKUP CIRCUIT LOAD (BEFORE TRANSFER) (MW)	(MX)	(MVA)	BACKUP CIRCUIT LOAD (AFTER TRANSFER) (MW)	(MX)	(MVA)	BACKUP CIRCUIT SCADA LIMITS NORMAL (MVA)	LTE (MVA)	STE (MVA)	TRIP (MVA)	PROBLEM AREAS
Hyannis Substation																		
84	16 7	2 0	16 8	2283		84 Oak Street	CLOSE T1-84A-84B OPEN 8412	4 9	0 3	4 9	21 8	3 1	22 0	50	50	50	?	
82	20 2	3 8	20 6	7296		82 Oak Street	CLOSE T1-82A-82B OPEN 8212	18 0	2 5	18 2	38 9	8 1	39 7	50	50	50	?	#82 CKT 5% > 36 MVA LTE Rating
90	7 3	1 1	7 4	3383		89 Harwich McG	CLOSE T1-89-90 OPEN 9042	15 9	2 2	16 1	23 5	5 0	24 0	30	32	33	35	
92	32 3	9 1	33 6	11229		92 Harwich McG	CLOSE T1-92-92 OPEN 9212 BKR	24 4	4 7	24 8	47 4	17 1	50 4	34	34	36	38	92 Line at 98% of 49 MVA conductor LTE for 795 ACSR, exceeding SCADA LTE & Trip, Low voltages 0.93 per unit Harwich McGraw Xfmr 98% of 70 MVA LTE
93	20 0	2 5	20 2	4128		92 Hyannis GE2	CLOSE T1-92-93 OPEN 9312 BKR	32 3	9 1	33 6	37 1	12 1	39 0	34	34	36	38	Hyannis GE#2 Xfmr 99% of 64 MVA LTE Both #92 Hyannis and #92 Harwich Exceed
						92 Harwich McG	OPEN 9209 SW CLOSE T1-92-92	24 4	4 7	24 8	40 6	11.4	42 2	34	34	36	38	SCADA LTE Limit and Trip

2004 T&D OPERATING STUDY
Cape & Vineyard District

MASHPEE SUBSTATION #946

Mashpee Substation #946 serves a power supply area consisting of portions of the Town of Mashpee. During the summer of 2003, peak station load coincident with Cape District on 8/16/03 20:00 hours was 27.3 MVA.

This loading reflects load transfers that were made to Hyannis Junction Substation #961 to prevent all-lines-in overloads of the Mashpee Substation #946 Transformer beyond Summer Normal and LTE ratings. If this load transfer had not taken place, the station load would have been approximately 43.8 MVA, 15% over the transformer's 38 MVA LTE rating.

In Fall of 2003, Oak Street Substation #920 was completed, which removed load from Mashpee Substation #946, Sandwich Substation #916, and Hyannis Junction Substation #961.

Mashpee Substation #946 consists of one 115/23.0 kV transformer:

#115: Moloney 20/26/33 [37] MVA 115/23.0 kV

Overload Ratings:

Transformer	Nameplate	Summer Normal Rating No Loss of Life	Summer 12 Hour LTE Rating 1% Loss of Life
#115	20/26/33 [37] MVA	35 MVA	38 MVA

Station Capabilities:

Total Station Capacity (N-0) Normal Ratings	Station Firm Capacity (N-1) LTE Ratings	Load Transfers (MVA)	Total LCC (LTE + Transfers)
35 MVA	0 MVA	27.0 MVA	27.0 MVA

Station Load Forecast:

2004	2005	2006	2007	2008
25.0 MW	25.3 MW	25.7 MW	26.1 MW	26.6 MW

Switching Actions:

Loss of #115 Moloney Transformer

Open: Circuit Switcher 11563 (at Mashpee)
Main circuit breaker 11562 (at Mashpee)
Feeder Breaker #7762 (at Mashpee)

MORE ↓

Close: Tie Switch #T1-77-77 (to Mashpee)
Tie Switch #T1-88-82A (to Oak Street)

Leave Closed: Feeder Breaker #8862 (at Mashpee) *

Capacitor bank breakers 11556c (Mashpee), 1153c (Hatchville), and 1222c (Oak Street)

** 4.8 MVAR capacitor bank on Mashpee 23kV bus required for voltage support when #88 line tied to Oak Street #82 line.*

Distribution Feeder Switching:

For the #115 Moloney transformer outage, the Hatchville Substation #946 transformer and the Oak Street Substation #920 transformer carry full station load of 25.0 MW.

The Oak Street Substation #920 #82 DSS line will be loaded to 35.8 MVA, 99.5% of its 36 MVA Summer LTE Rating. No other load transfer actions can reduce the load on this feeder circuit.

Contingency backup of each of the two (2) 23kV Mashpee DSS feeders can be accomplished, and the transfers and switching operations required to back each feeder up are shown on the attached table.

Total Transfer: 27.0 MVA

Summary of Concerns: Mashpee Substation #946

Station:

Based on load projections, Mashpee Substation #946 has adequate firm capability through load forecast year 2013 for a contingency outage of the Magnetek 20/26/33 MVA transformer bank, insofar as substation transformer capacity is concerned. Please reference power flow diagrams **CV-12** through **CV-13**.

A limiting element that arises in forecast year 2004 during the load transfer to Oak Street, the #82 DSS line (formerly the #518 circuit), reaches 99.5% of its 36 MVA LTE rating (477 ACSR conductor). There is a proposed project to reconductor approximately 1.9 miles of the #82 Line from 477 ACSR to 795 ACSR conductor (rated for 49 MVA LTE), from Oak Street Substatation to the tap point on the right-of-way near Centerville Tap. The cost estimate for this is approximately $350k, proposed for Summer 2004. This upgrade is also identified under *Hyannis Junction Substation #961*, for contingency backup of transformers at that station.

Transmission:

From a station capacity perspective, contingency outages of the #115 115kV line is not generally problematic at Mashpee Substation #946. Loss of the 115kV line is identical in performance to the single contingency outage of the Mashpee substation transformer that it serves.

Loss of the #115 line, if it also affects Falmouth Substation #933 and Hatchville Substation #936, which would result in the outage of three (3) 23kV transformer banks, may require load shedding, and is discussed further under the #115 line outage at *Bulk Transmission Facility Outages*.

DSS/Distribution:

Of the two (2) 23kV DSS lines served out of Mashpee Substation #946, the #88 line (as backed up from the Oak Street #92 line) is thermally limited during contingency, which has already been identified. Contingency backup of the #77 Line from Hatchville is not problematic. Please refer to contingency switching on the attached Table.

5kV Class Substation and Distribution:

Mashpee Substation #946 feeds one (1) distribution substation:

- Santuit Substation #941 23/4.16kV wye

The table below summarizes the capacity of these distribution stations versus forecasted Summer peak loads:

5kV Transformer	Normal Rating	2004 Projection	2008 Projection
Santuit 4.16kV	2.50 MVA	**2.1 MVA**	**2.3 MVA**

Proposed Integrated Plan:

The suggested actions table listed below will address all of the capacity concerns in the Mashpee Substation #946 power supply area.

As previously discussed for *Hyannis Junction Substation #961*, there is a proposed project to reconductor approximately 1.9 miles of the #82 Line from 477 ACSR to 795 ACSR conductor (rated for 49 MVA LTE), from Oak Street Substatation to the tap point on the right-of-way near Centerville Tap. The cost estimate for this is approximately $350k, proposed for Summer 2004. The upgrade of this line would address contingency overloads in backing up Mashpee Substation and Hyannis Junction Substation.

Recommended course of action for Mashpee Substation #946

Action	Year needed	Estimated Cost
⇒ Upgrade 1.9 miles Oak Street #82 line from 336 ACSR to 795 ACSR (49 MVA)	2004	$350k

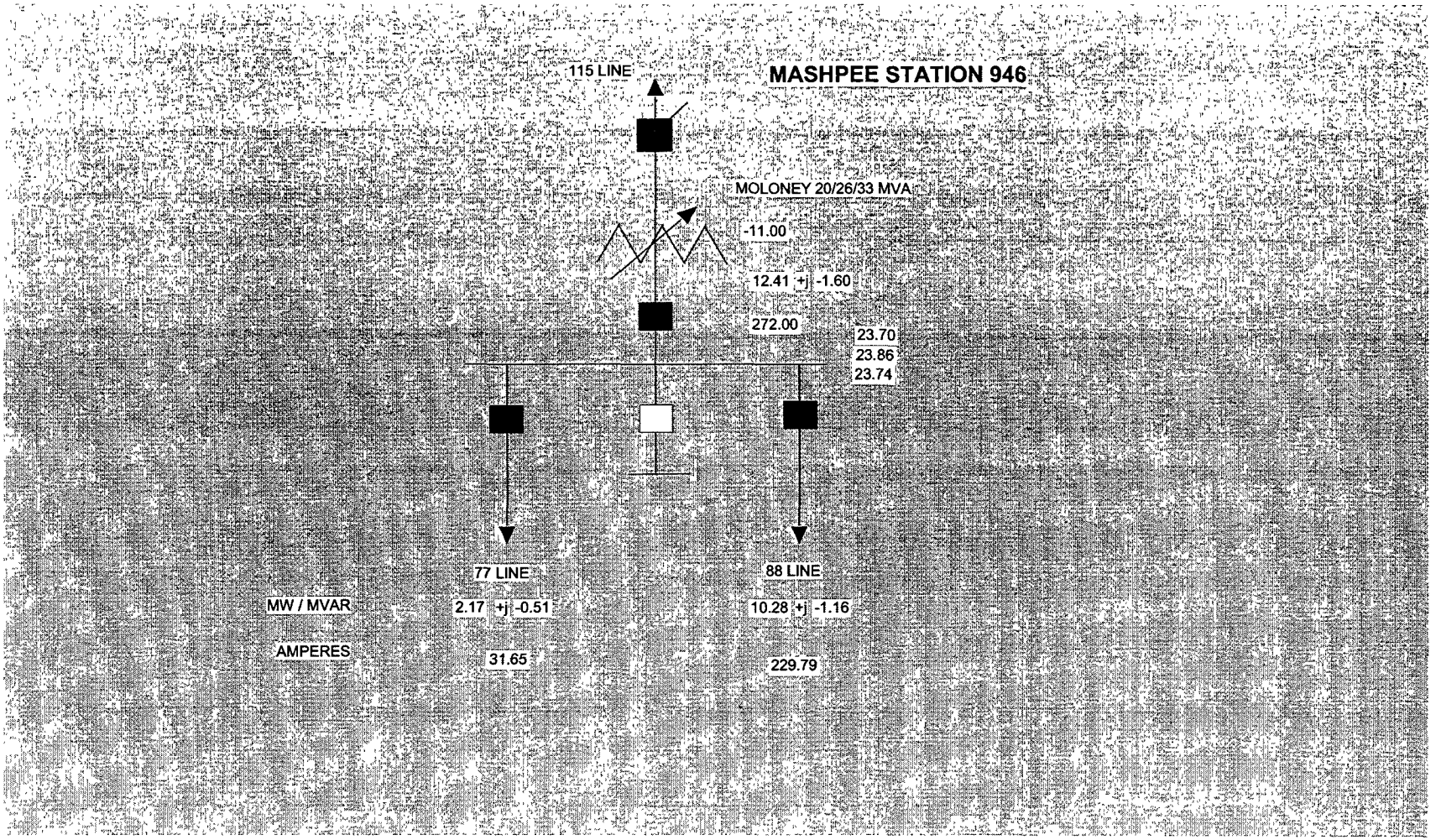
MASHPEE STATION 946
115 LINE
MOLONEY 20/26/33 MVA
-11.00
12.41 +j -1.60
272.00
23.70
23.86
23.74
77 LINE
88 LINE
MW / MVAR
2.17 +j -0.51
10.28 +j -1.16
AMPERES
31.65
229.79

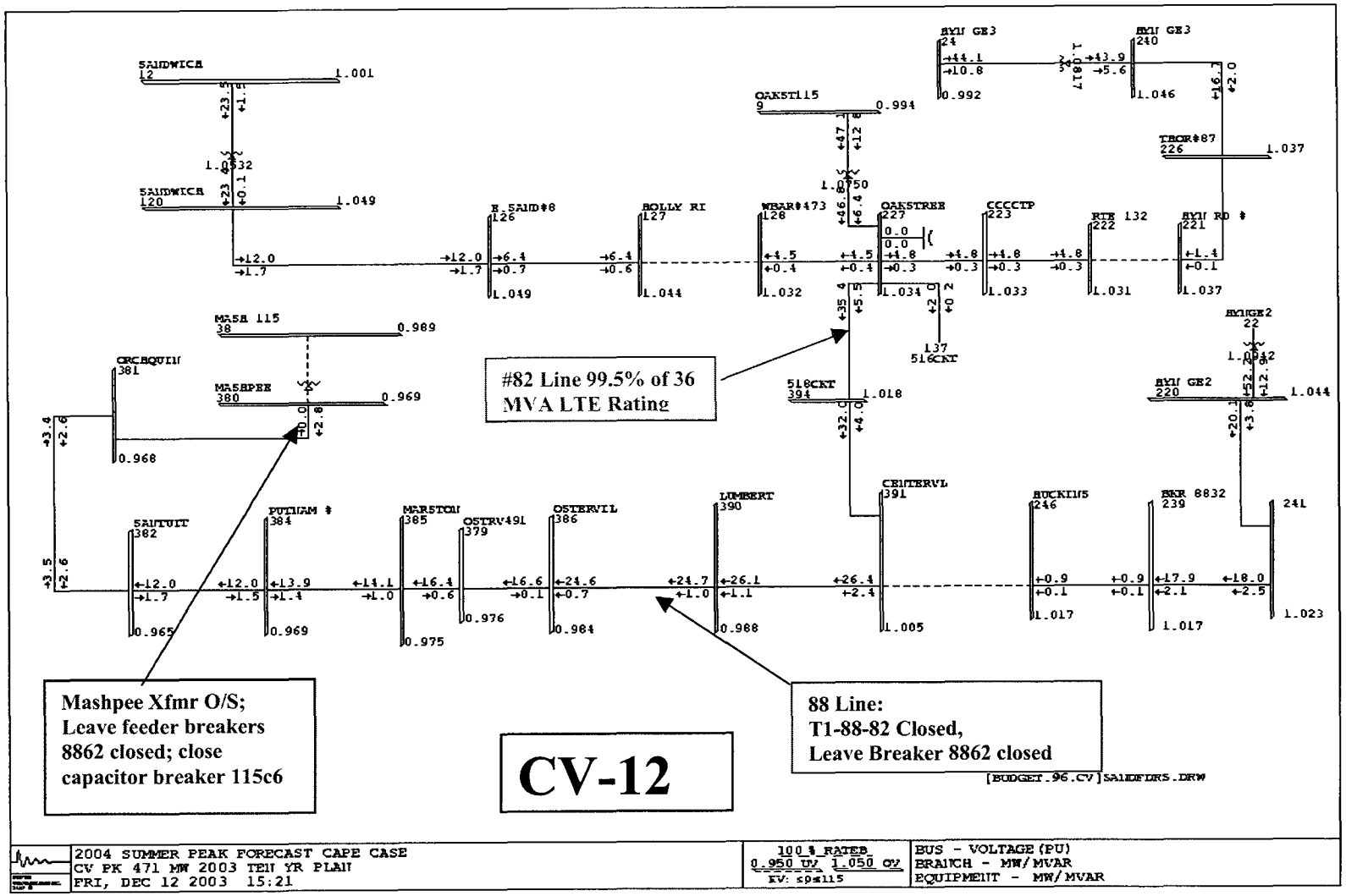
#82 Line 99.5% of 36 MVA LTE Rating
Mashpee Xfmr O/S; Leave feeder breakers 8862 closed; close capacitor breaker 115c6
88 Line: T1-88-82 Closed, Leave Breaker 8862 closed
CV-12
2004 SUMMER PEAK FORECAST CAPE CASE
CV PK 471 MW 2003 TEN YR PLAN
FRI, DEC 12 2003 15:21
100 % RATED
0.950 UV 1.050 OV
KV: 69≤115
BUS - VOLTAGE (PU)
BRANCH - MW/MVAR
EQUIPMENT - MW/MVAR
[BUDGET.96.CV]SANDFDRS.DRW

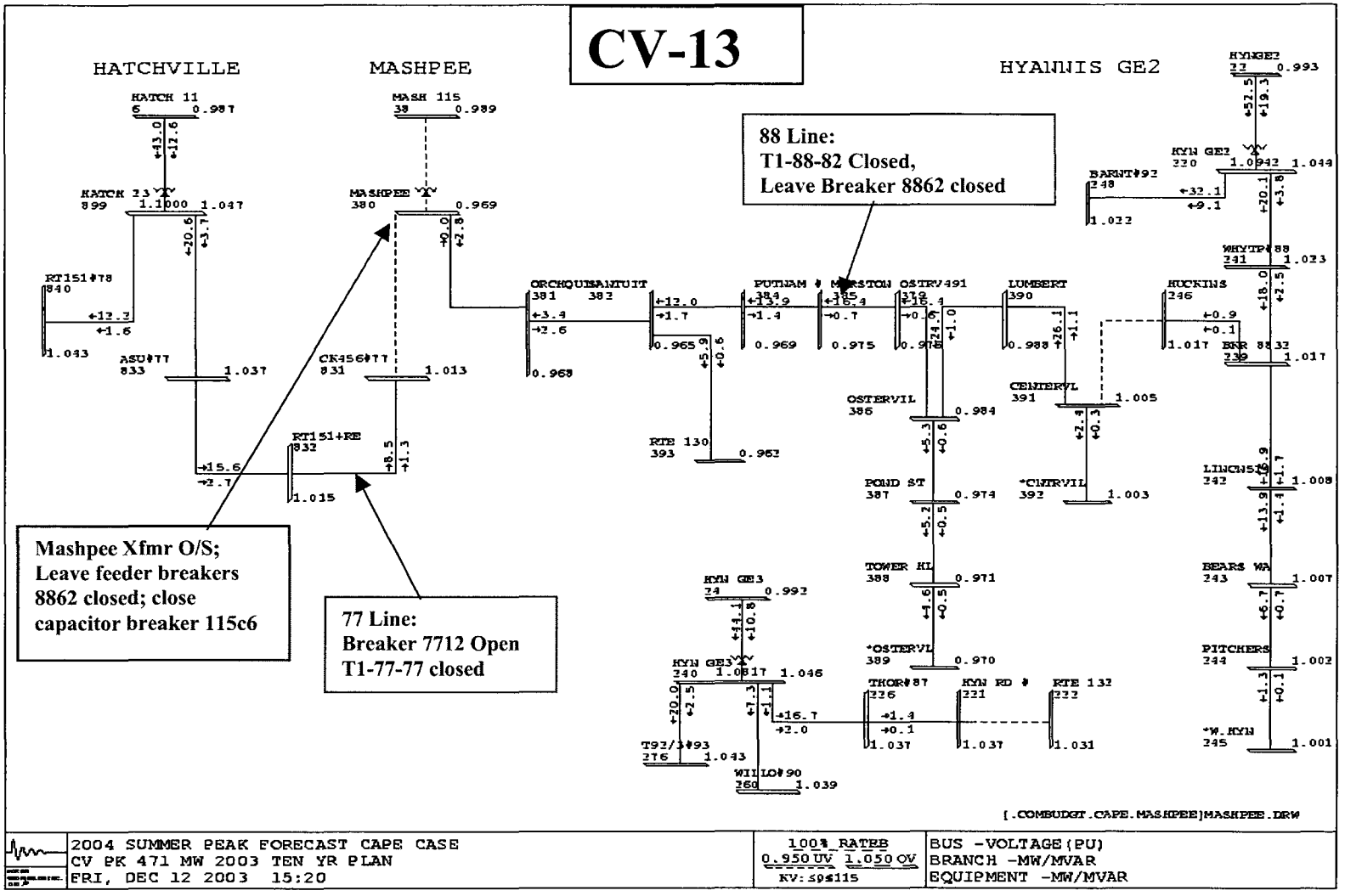
CV-13
HATCHVILLE
MASHPEE
HYANNIS GE2
88 Line:
T1-88-82 Closed,
Leave Breaker 8862 closed
Mashpee Xfmr O/S;
Leave feeder breakers
8862 closed; close
capacitor breaker 115c6
77 Line:
Breaker 7712 Open
T1-77-77 closed
[.COMBUDGT.CAPE.MASHPEE]MASHPEE.DRW
2004 SUMMER PEAK FORECAST CAPE CASE
CV PK 471 MW 2003 TEN YR PLAN
FRI, DEC 12 2003 15:20
100% RATEB
0.950 UV 1.050 OV
KV: ≤9≤115
BUS -VOLTAGE(PU)
BRANCH -MW/MVAR
EQUIPMENT -MW/MVAR

2003 5/10 Year Plan - Year 2004 DSS Line Load Transfers - Cape & Vineyard District

BULK SUBSTATION DSS LINE SINGLE-CONTINGENCY ANALYSIS

* Coincident Feeder peaks at Forecasted Summer 2004 District Peaks
* Switching Sequences and Effects of Load Transfer Under Coincident Peak Conditions

CIRCUIT NUMBER	COINCIDENT PEAK LOAD (MW)	(MX)	(MVA)	NUMBER CUSTOMERS	BACKUP CIRCUIT	BACKUP STATION	SWITCHING ACTIONS	BACKUP CIRCUIT LOAD (BEFORE TRANSFER) (MW)	(MX)	(MVA)	BACKUP CIRCUIT LOAD (AFTER TRANSFER) (MW)	(MX)	(MVA)	BACKUP CIRCUIT SCADA LIMITS NORMAL (MVA)	LTE (MVA)	STE (MVA)	TRIP (MVA)	PROBLEM AREAS
Mashpee Substation																		
77	8.5	1.3	8.6	3056		77 Hatchville	CLOSE T1-77-77 OPEN 7762	11.9	1.5	12.0	20.7	3.7	21.0	27	28	30	32	
88	16.5	1.7	16.6	13625		518 Oak Street	CLOSE T1-88W-88W OPEN 8862 BKR	18.0	2.5	18.2	35.7	8.4	36.7	TO BE DETERMINED				0.95 per unit voltage line end at Santuit

2004 T&D OPERATING STUDY
Cape & Vineyard District

OAK STREET SUBSTATION #920

Oak Street Substation #920 serves a power supply area consisting of portions of the Towns Barnstable, Sandwich, and Mashpee (including: Centerville, Osterville, W. Barnstable, Marston's Mills, Newtown, E. Sandwich).

Since this is a new substation that was not yet in service during 2003 Summer peak, no station peak coincident with the Cape District is available. The forecasted Summer peak for 2004, shows a substation peak load coincident with Cape District of 22.2 MW. Oak Street Substation #920 was fully complete by Fall of 2003, which removed load from Mashpee #946, Sandwich Substation #916, and Hyannis Junction Substation #961.

Oak Street Substation #920 consists of one 115/23.0 kV transformer:

#122: ABB 30/40/50 MVA 115/23.0 kV

Overload Ratings:

Transformer	Nameplate	Summer Normal Rating No Loss of Life	Summer 12 Hour LTE Rating 1% Loss of Life
#122	30/40/50 MVA	74 MVA	76 MVA

Station Capabilities:

Total Station Capacity (N-0) Normal Ratings	Station Firm Capacity (N-1) LTE Ratings	Load Transfers (MVA)	Total LCC (LTE + Transfers)
74 MVA	0 MVA	41.0 MVA	41.0 MVA

Station Load Forecast:

2004	2005	2006	2007	2008
24.4 MW	24.8 MW	25.1 MW	25.5 MW	25.9 MW

Switching Actions:

Loss of #115 Moloney Transformer

Open: Circuit Switcher 12233 (at Oak Street)
Main circuit breaker 11242 (at Oak Street)
Feeder Breaker #8752 (at Oak Street)
Feeder Breaker #8452 (at Oak Street)
Feeder Breaker #8252 (at Oak Street)
Feeder Breaker #8052 (at Oak Street)
Switch #8229 (#92 Line between Lumberts Mill Road and Osterville Tap) **MORE**

Close: Tie Switch #T1-87A-87B (to Sandwich)
Tie Switch #T1-84A-84B (to Hyannis Junction)
Tie Switch #T1-82A-82B (to Hyannis Junction)
Tie Switch #T1-80-87B (outside of Oak Street Substation)
Tie Switch #T1-82A-88 (on ROW toward Mashpee Substation)

Capacitor banks 1244c and 1234c (Hyannis Junction), 1156c (Mashpee), 1221c (Sandwich)

Distribution Feeder Switching:

For the #122 ABB transformer outage, the Sandwich Substation #916 transformer, the Mashpee Substation #946 transformer, and the Hyannis Junction Substation #961 transformers carry full station load of 22.2 MW.

Contingency backup of all four (4) 23kV Oak Street DSS feeders can be accomplished, and the transfers and switching operations required to back each feeder up are shown on the attached table.

Total Transfer: 41.0 MVA

Summary of Concerns: Oak Street Substation #920

Station:

Based on load projections, Oak Street Substation #920 has adequate firm capability through load forecast year 2010 for a contingency outage of the ABB 30/40/50 MVA transformer bank. Please reference power flow diagrams **CV-14** through **CV-15**.

The limiting element that arises in forecast year 2010 is the 20/26/33 MVA transformer bank at Mashpee Substation #946. Upgrade of the Mashpee Substation transformer to 30/40/50 MVA, or construction of a new substation at NSTAR's Cammett Road site in Barnstable (midway between Oak Street and Mashpee on the transmission right-of-way) would alleviate this deficiency. Since this is at the later end of the load forecast, a small-area supply study will be conducted to ascertain the most effective solution(s).

Transmission:

From a station capacity perspective, contingency outages of the #122 115kV line is not generally problematic at Oak Street Substation #920. Loss of the 115kV line is identical in performance to the single contingency outage of the Oak Street substation transformer that it serves.

Loss of the #122 line, if it also affects Sandwich Substation #916, which would result in the outage of two (2) 23kV transformer banks, may require load shedding, and is discussed further under the #122 line outage at *Bulk Transmission Facility Outages*.

DSS/Distribution:

Contingency backup any of Oak Street Substation's four (4) 23kV Distribution Supply Lines from adjacent substations is not problematic. Please refer to contingency switching on the attached Table.

5kV Class Substation and Distribution:

Oak Street Substation #920 feeds two(2) distribution substations:

- Centerville Substation #911 23/4.16kV wye
- Osterville Substation #913 23/4.16kV wye

The table below summarizes the capacity of these distribution stations versus forecasted Summer peak loads:

5kV Transformer	Normal Rating	2004 Projection	2008 Projection
Centerville 4.16kV	5.00 MVA	**2.4 MVA**	**2.5 MVA**
Osterville 4.16kV	5.00 MVA	5.6 MVA	6.0 MVA

Proposed Integrated Plan:

The suggested actions table listed below will address all of the capacity concerns in the Oak Street Substation #920 power supply area.

As previously discussed for *Hyannis Junction Substation #961*, and for *Mashpee Substation #946*, there is a proposed project to reconductor approximately 1.9 miles of the Oak Street #82 Line from 477 ACSR to 795 ACSR conductor (rated for 49 MVA LTE), from Oak Street Substatation to the tap point on the right-of-way near Centerville Tap. The cost estimate for this is approximately $350k, proposed for Summer 2004. The upgrade of this line would address contingency overloads in backing up Oak Street Substation and Hyannis Junction Substation, and is repeated in this section.

There is a proposed project to address all-facilities-in overloads of the Osterville Substation #913 5 MVA transformer. Osterville Substation's construction is not in accordance with current OSHA safety codes, and the single 5 MVA transformer exceeds top nameplate rating at current and future forecasted Summer peak load levels. There is a proposed project to completely replace the existing Osterville Substation with a completely new 23/4.16kV distribution station, double-ended with two (2) 7.5 MVA transformers. The cost estimate for this project is $500k.

Recommended course of action for Oak Street Substation #920

Action	Year needed	Estimated Cost
⇒ Upgrade 1.9 miles Oak Street #82 line from 336 ACSR to 795 ACSR (49 MVA)	2004	$350k
⇒ Rebuild Osterville Substation #913 with double-ended 7.5 MVA transformers	2005	TBD
⇒ Investigate Upgrade of Mashpee Substation to 30/40/50 MVA transformer	2010+	TBD

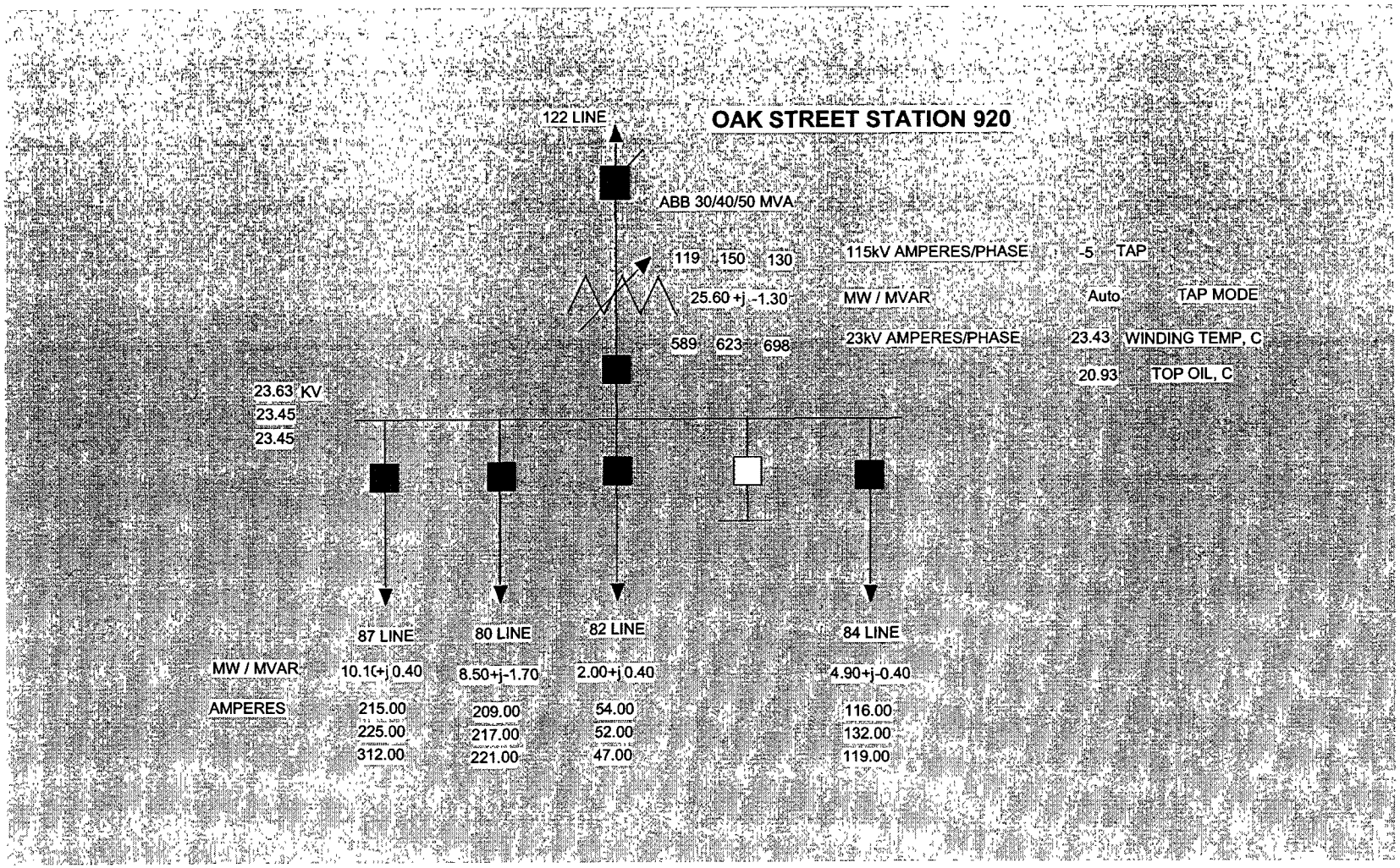
OAK STREET STATION 920
122 LINE
ABB 30/40/50 MVA
119 150 130
115kV AMPERES/PHASE
-5 TAP
25.60 +j -1.30
MW / MVAR
Auto
TAP MODE
589 623 698
23kV AMPERES/PHASE
23.43 WINDING TEMP, C
20.93 TOP OIL, C
23.63 KV
23.45
23.45
87 LINE
80 LINE
82 LINE
84 LINE
MW / MVAR
10.10+j 0.40
8.50+j-1.70
2.00+j 0.40
4.90+j-0.40
AMPERES
215.00
225.00
312.00
209.00
217.00
221.00
54.00
52.00
47.00
116.00
132.00
119.00

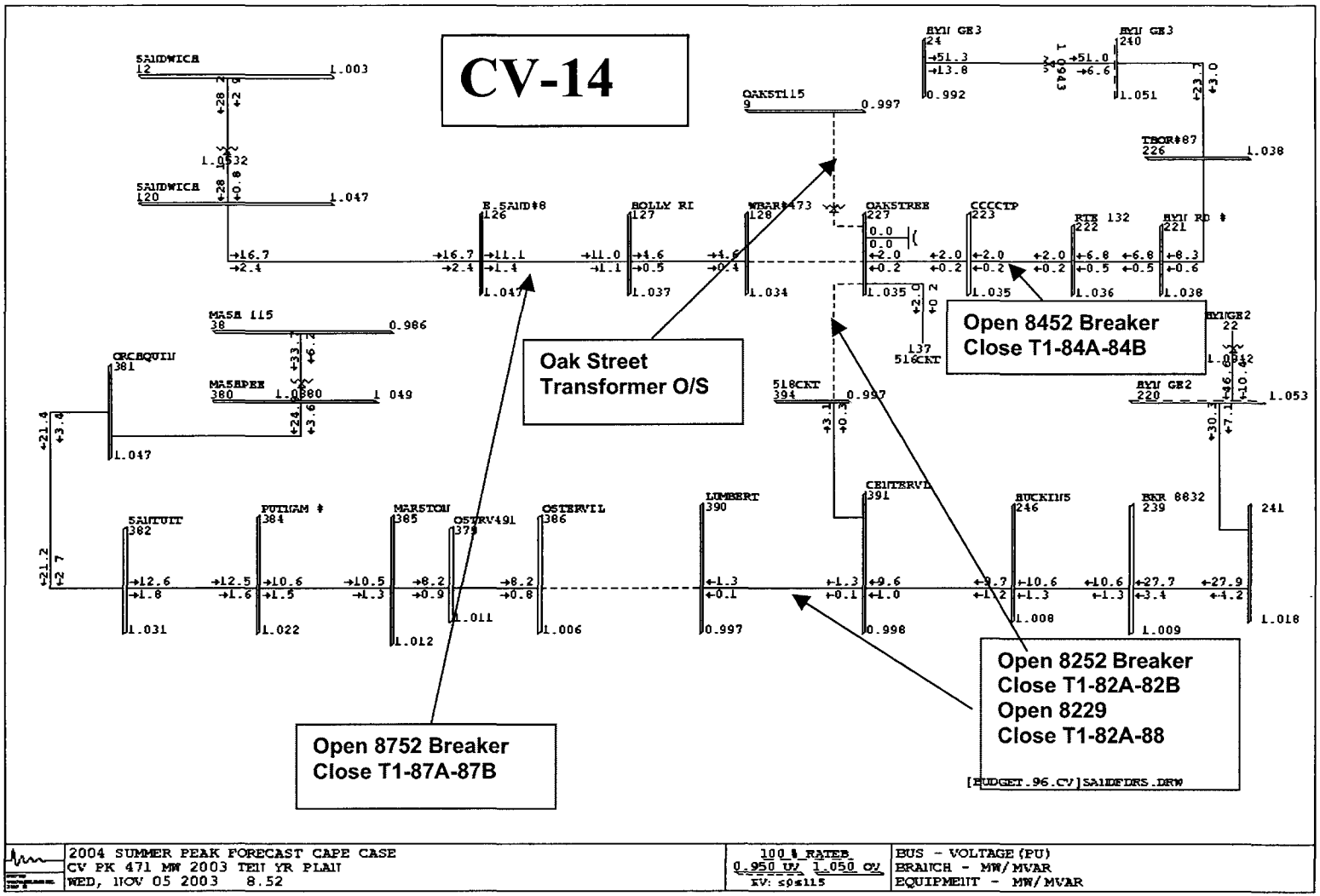
CV-14
Oak Street Transformer O/S
Open 8452 Breaker
Close T1-84A-84B
Open 8252 Breaker
Close T1-82A-82B
Open 8229
Close T1-82A-88
Open 8752 Breaker
Close T1-87A-87B
2004 SUMMER PEAK FORECAST CAPE CASE
CV PK 471 MW 2003 TEN YR PLAN
WED, NOV 05 2003 8.52
100 % RATED
0.950 UV 1.050 OV
KV: ≤9≤115
BUS - VOLTAGE (PU)
BRANCH - MW/MVAR
EQUIPMENT - MW/MVAR

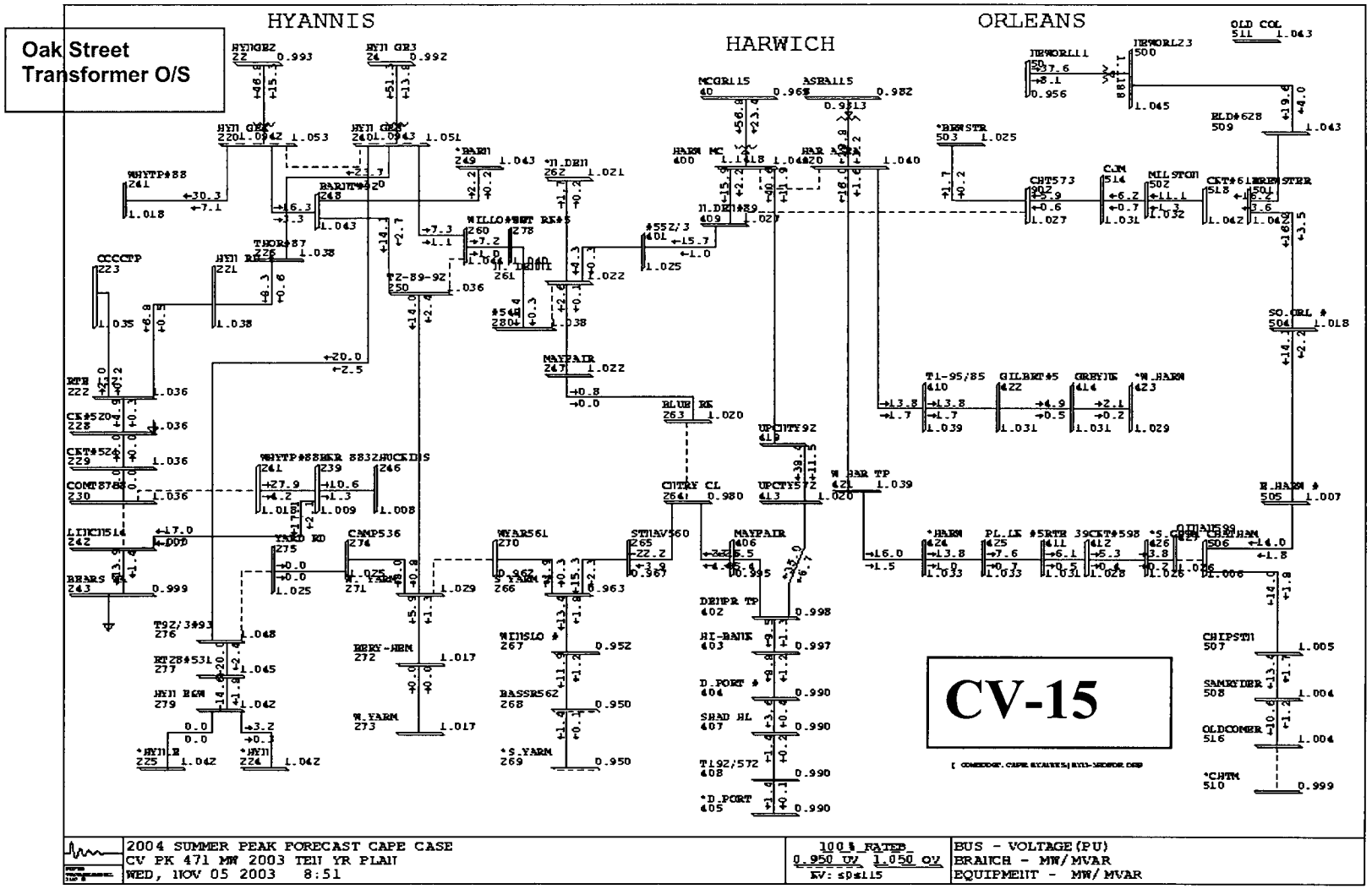
Oak Street
Transformer O/S
HYANNIS
HARWICH
ORLEANS
CV-15
2004 SUMMER PEAK FORECAST CAPE CASE
CV PK 471 MW 2003 TEN YR PLAN
WED, NOV 05 2003 8:51
100% RATEB
0.950 UV 1.050 OV
KV: 50%115
BUS - VOLTAGE(PU)
BRANCH - MW/MVAR
EQUIPMENT - MW/MVAR

2003 5/10 Year Plan - Year 2004 DSS Line Load Transfers - Cape & Vineyard District

BULK SUBSTATION DSS LINE SINGLE-CONTINGENCY ANALYSIS

* Coincident Feeder peaks at Forecasted Summer 2004 District Peaks
* Switching Sequences and Effects of Load Transfer Under Coincident Peak Conditions

CIRCUIT NUMBER	COINCIDENT PEAK LOAD (MW)	(MX)	(MVA)	NUMBER CUSTOMERS	BACKUP CIRCUIT	BACKUP STATION	SWITCHING ACTIONS	BACKUP CIRCUIT LOAD (BEFORE TRANSFER) (MW)	(MX)	(MVA)	BACKUP CIRCUIT LOAD (AFTER TRANSFER) (MW)	(MX)	(MVA)	BACKUP CIRCUIT SCADA LIMITS NORMAL (MVA)	LTE (MVA)	STE (MVA)	TRIP (MVA)	PROBLEM AREAS
Oak Street Substation																		
84	4.9	0.3	4.9	TBD	84	Hyannis GE3	CLOSE T1-87E-87E OPEN 87E BREAKER	16.7	2.0	16.8	18.1	1.0	18.1	?	?	?	47	
87	4.6	0.4	4.6	TBD	87	Sandwich	CLOSE T1-87W-87W OPEN 87W BREAKER	12.0	1.7	12.1	28.9	6.6	29.6	32	34	36	38	
82	18.0	2.5	18.2	TBD	82	Hyannis GE2	CLOSE T1-88E-88E OPEN 518 BREAKER OPEN 8859	20.2	3.8	20.6	31.1	1.0	31.1	32	34	36	38	Hyannis GE#2 at 100% of 64 MVA LTE Rating
				AND	88	Mashpee	CLOSE T1-88W-88W	16.4	1.7	16.5	26.3	3.9	26.6	27	34	34	38	
80	2.0	0.2	2.0	TBD	87B	Oak Street	CLOSET T1-80-87B	4.6	0.4	4.6	6.6	0.6	6.6	50	50	50	?	

2004 T&D OPERATING STUDY
Cape & Vineyard District

ORLEANS SUBSTATION #975

Orleans Substation #975 serves a power supply area consisting of all or portions of the Towns of Orleans, Eastham, and Chatham. During the summer of 2003, peak station load coincident with Cape District on 8/16/03 20:00 hours was 31.0 MVA.

Orleans Substation #975 consists of two 115/23.0 kV transformers:

#118: Waukesha 30/40/50 [56] MVA 115/23.0 kV
#119: Allis-Chalmers 20/26/33 MVA 115/23.0 kV

Overload Ratings:

Transformer	Nameplate	Summer Normal Rating No Loss of Life	Summer 12 Hour LTE Rating 1% Loss of Life
#118	30/40/50 [56] MVA	59 MVA	65 MVA
#119	20/26/33 MVA	43 MVA	47 MVA

Station Capabilities:

Total Station Capacity (N-0) Normal Ratings	Station Firm Capacity (N-1) LTE Ratings	Load Transfers (MVA)	Total LCC (LTE + Transfers)
102 MVA	43 MVA	34.0 MVA	77 MVA

Station Load Forecast:

2004	2005	2006	2007	2008
37.9 MW *	38.2 MW	38.6 MW	38.9 MW	39.2 MW
52.1 MW *	52.4 MW	53.0 MW	53.5 MW	54.0 MW

** A reconfiguration of the #89 and #95 lines out of Orleans will result in the transfer of the Chatham Substation lateral from Harwich Substation to Orleans, resulting in a higher forecasted load level. Loadflow testing was conducted assuming the reconfiguration has been completed, at the higher load level.*

Switching Actions:

Loss of #119 Allis-Chalmers 20/26/33 MVA Transformer

Open: Circuit Switcher 11943
Main circuit breaker 11942

Close: Orleans 23kV bus tie breaker #T1-254
* Tap changers must be in same position, and off.

Capacitor Bank breakers 1184c and 1194c, as needed.

Loss of #118 Waukesha 30/40/50 MVA Transformer

Open: Circuit Switcher 11843
Main circuit breaker 11842
Switch #9453 between Old Colony Rd. and Gov. Prence Road **

Close: Orleans 23kV bus tie breaker #T1-254
* Tap changers must be in same position, and off.
Tie Switch #T1-94-94 (on ROW to Wellfleet) **

Capacitor Bank breakers 1184c and 1194c, as needed.

*** The transfer of #94 circuit load to Wellfleet must done BEFORE closing the bus tie breaker at Orleans; otherwise, you will overload the 20/26/33 MVA transformer.*

Distribution Feeder Switching:

For the #119 (Allis Chalmers) transformer outage, remaining #118 (Waukesha) Orleans Substation #975 transformer carries full station load of 52.1 MW.

For the #118 (Waukesha) transformer outage, remaining #119 (Waukesha) Orleans Substation #975 transformer and the Wellfleet Substation #975 GE 12/16/20 MVA transformer carry full station load of 52.1 MW.

Contingency backup of each of the three (3) 23kV Orleans DSS feeders can be accomplished, and the transfers and switching operations required to back each feeder up are shown on the attached table. The switching assumes both existing configuration of #89/95 DSS lines, and proposed configuration once the new Orleans #89 line is complete.

Total Transfer: 34.0 MVA

Summary of Concerns: Orleans Substation #975

Station:

Based on load projections, Orleans Substation #975 has adequate firm capability through load forecast year 2013 for a contingency outage of either transformer bank. Please reference power flow diagrams **CV-16** and **CV-17**.

Transmission:

From a station capacity perspective, contingency outages of either the #118 or #119 115kV lines are not generally problematic at Orleans Substation #975. Loss of either 115kV line is identical in performance to the single contingency outage of the Orleans substation transformer that it serves.

Loss of the #118 line, if it also affects Harwich Substation #968, and Wellfleet Substation #976 (by way of trip of the #125 line), which would result in the outage of three (3) 23kV transformer banks, may require load shedding, and is discussed further under the #118 line outage at *Bulk Transmission Facility Outages*.

Loss of the #119 line, if it also affects Harwich Substation #968, and Hyannis Junction Substation #958 (by way of trip of the #123 line), which would result in the outage of three (3) 23kV transformer banks, may require load shedding, and is discussed further under the #119 line outage at *Bulk Transmission Facility Outages*.

DSS/Distribution:

1. Harwich Substation #968 #95 Line may reach 37.3 MVA, which is 110% of 34.0 MVA SCADA LTE rating for contingency backup of Orleans #95 Line, with a 38 MVA trip setting. Phase conductor is 795 ACSR, capable of 49 MVA LTE rating, readjusting SCADA alarm and trip settings is recommended.

Contingency backup of 23kV DSS feeders #82, #89, and #95 are not problematic from a thermal or voltage performance standpoint.

Please refer to contingency switching on the attached Table.

23.0 kV Feeder	Backup Circuit	Summer LTE Rating in MVA	Projected % of LTE 2004	Projected % of LTE 2008
Orleans #95	Harwich #95	34 (SCADA)	110%	110%
		49 (795 ACSR)	76%	76%

5kV Class Substation and Distribution:

Orleans Substation #975 feeds three (3) distribution substations of various primary voltages:

- Orleans Local #975 Distribution Substation 4.8kV delta
- Chatham Substation #914 23/4.16kV wye
- Brewster Substation #951 23/4.8kV delta

The table below summarizes the capacity of these distribution stations versus forecasted Summer peak loads:

5kV Transformer	Normal Rating	2004 Projection	2008 Projection
Orleans Local 4.8kV delta	5.00 MVA	5.5 MVA	5.7 MVA
Chatham 4.16kV	5.00 MVA	5.7 MVA	5.9 MVA
Brewster 4.8kV delta	2.50 MVA	2.6 MVA	2.7 MVA

Proposed Integrated Plan:

The suggested actions table listed below will address all of the capacity concerns in the Orleans Substation #975 power supply area.

One (1) 23 kV DSS line overloads (beyond existing SCADA alarm and trip settings occur during post-contingency load transfers of the Orleans #95 DSS line. Existing conductor rating for 795 ACSR (49 MVA

LTE) on the backup line, the Harwich #95 line, is not exceeded; the SCADA alarm limits and trip settings should be investigated and updated.

Marginal all-facilities-in overloads beyond top nameplate rating of the transformers at the Orleans Local, Chatham, and Brewster distribution substation can be addressed by the addition of thermostatically-controlled fans to increase the top nameplate ratings of those transformer by about 33%. This is estimated at $12k per installation, total of $36k for all three stations

Recommended course of action for Orleans Substation #975

Action	Year needed	Estimated Cost
⇒ Increase SCADA Alarm and Trip settings on Harwich #95 DSS Line	2004	$0
⇒ Install fans on Chatham, Brewster Distribution Substation Transformers	2004	$36k

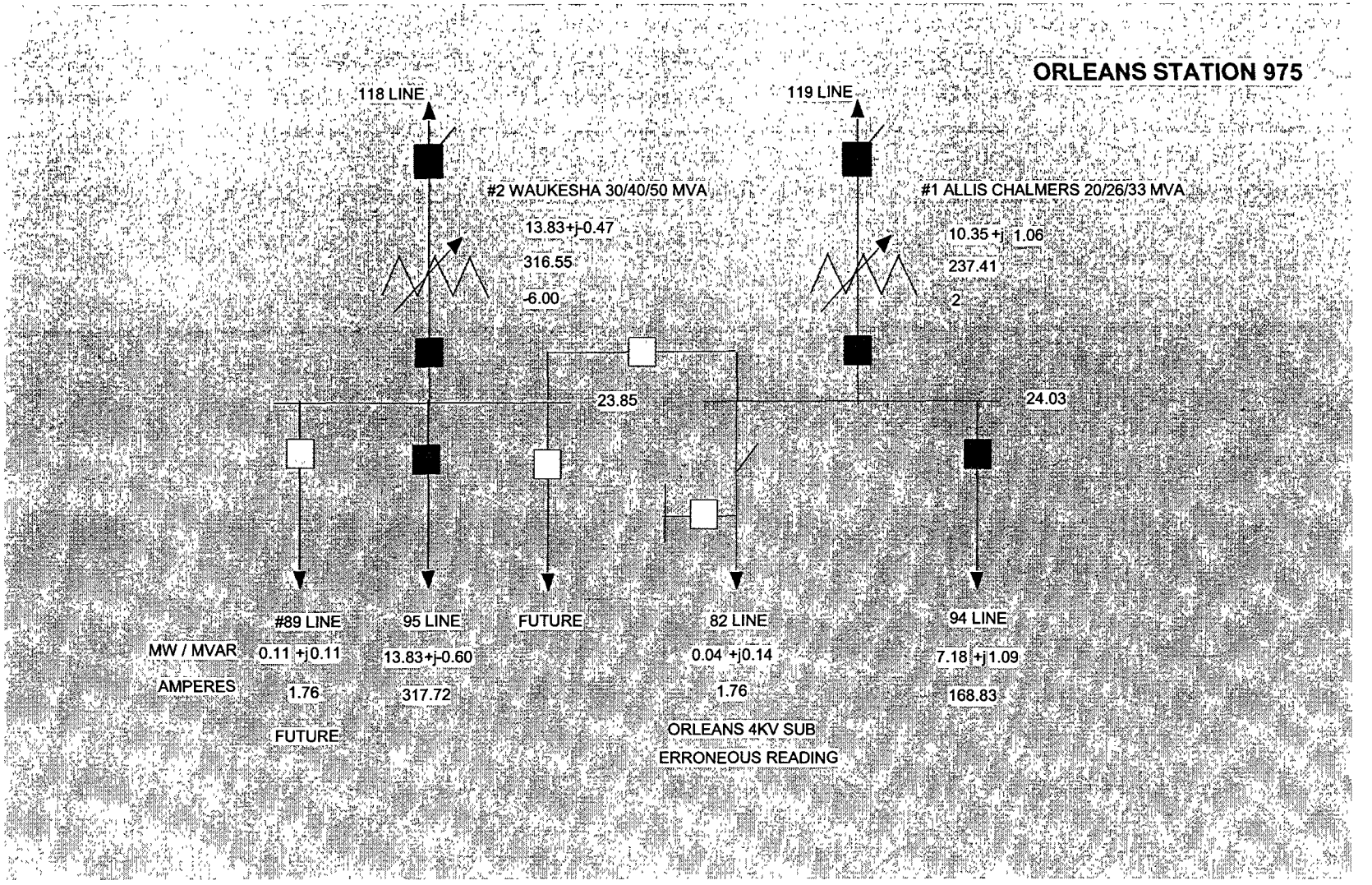
ORLEANS STATION 975
118 LINE
119 LINE
#2 WAUKESHA 30/40/50 MVA
13.83+j-0.47
316.55
-6.00
#1 ALLIS CHALMERS 20/26/33 MVA
10.35 +j 1.06
237.41
2
23.85
24.03
#89 LINE
95 LINE
FUTURE
82 LINE
94 LINE
MW / MVAR
0.11 +j0.11
13.83+j-0.60
0.04 +j0.14
7.18 +j1.09
AMPERES
1.76
317.72
1.76
168.83
FUTURE
ORLEANS 4KV SUB
ERRONEOUS READING

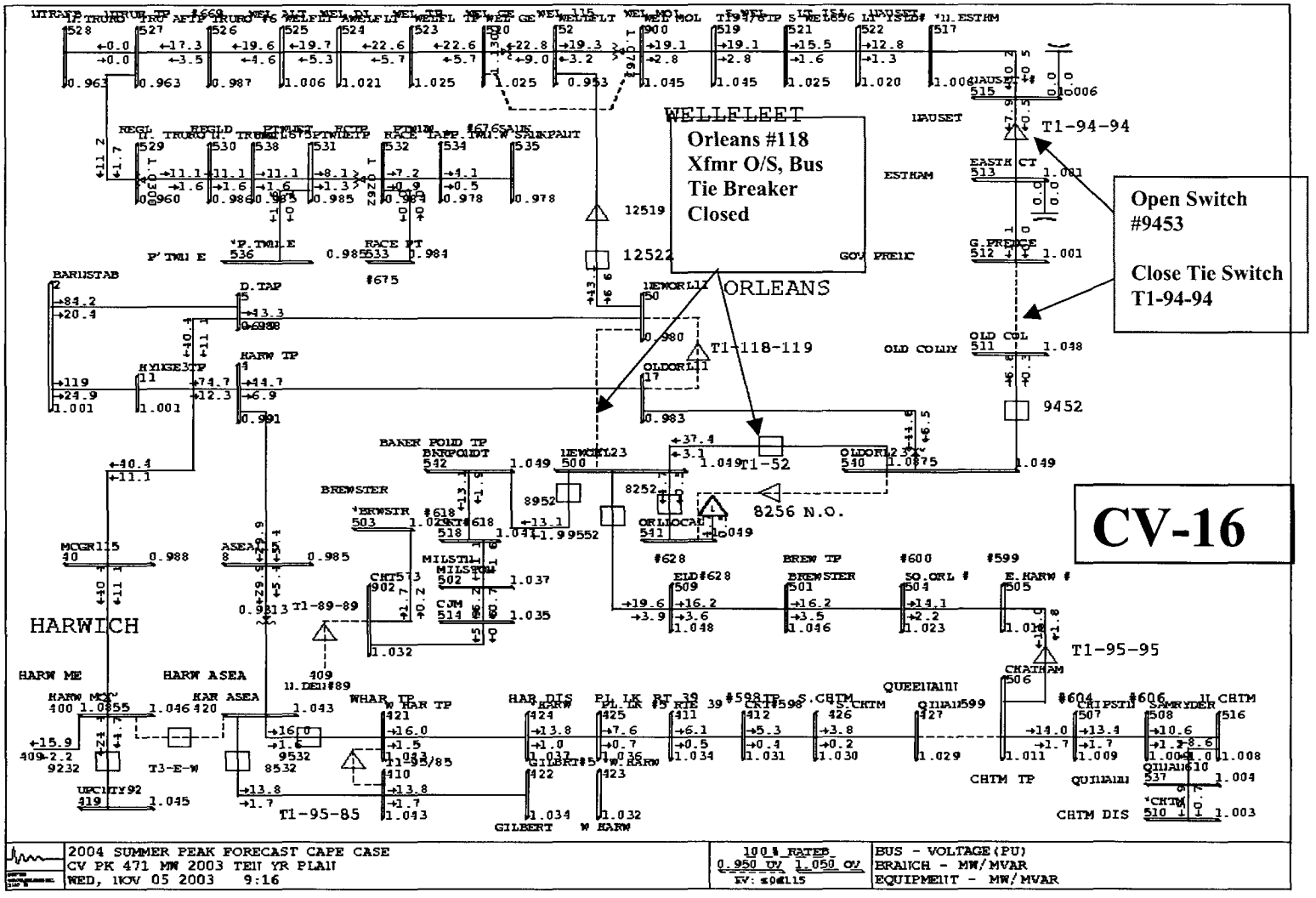
WELLFLEET
Orleans #118
Xfmr O/S, Bus
Tie Breaker
Closed
ORLEANS
T1-94-94
Open Switch
#9453
Close Tie Switch
T1-94-94
T1-118-119
T1-52
8256 N.O.
CV-16
HARWICH
T1-89-89
T1-95-95
T1-95-85
2004 SUMMER PEAK FORECAST CAPE CASE
CV PK 471 MW 2003 TEIT YR PLAIT
WED, IKOV 05 2003 9:16
BUS - VOLTAGE(PU)
BRAIICH - MW/MVAR
EQUIPMEIT - MW/MVAR

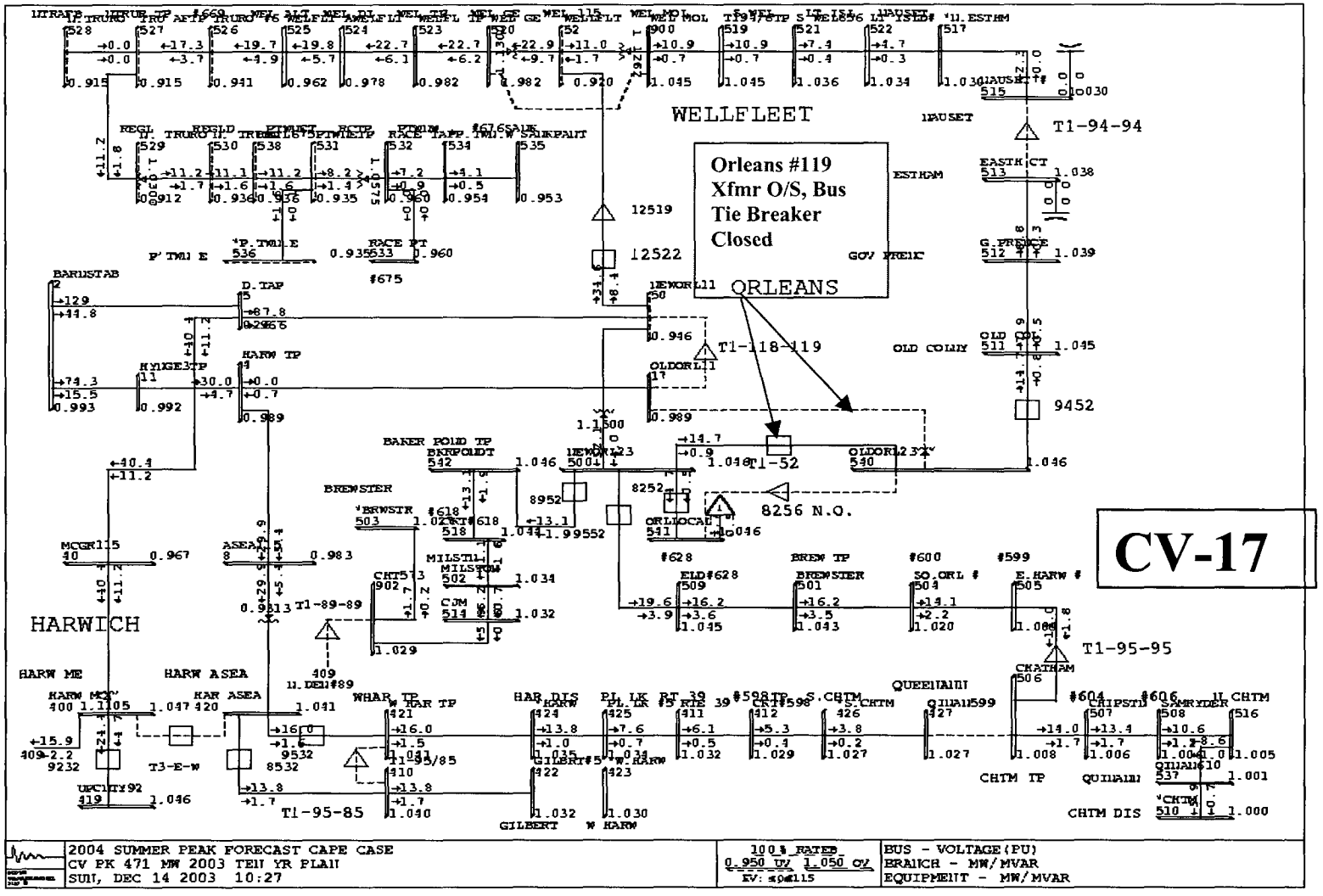
Orleans #119
Xfmr O/S, Bus
Tie Breaker
Closed
WELLFLEET
ORLEANS
HARWICH
T1-94-94
T1-118-119
T1-52
8256 N.O.
T1-89-89
T1-95-95
T1-95-85
CV-17
2004 SUMMER PEAK FORECAST CAPE CASE
CV PK 471 MW 2003 TEN YR PLAN
SUN, DEC 14 2003 10:27
100% RATED
0.950 UV 1.050 OV
BUS - VOLTAGE(PU)
BRANCH - MW/MVAR
EQUIPMENT - MW/MVAR

2003 5/10 Year Plan - Year 2004 DSS Line Load Transfers - Cape & Vineyard District

BULK SUBSTATION DSS LINE SINGLE-CONTINGENCY ANALYSIS

* Coincident Feeder peaks at Forecasted Summer 2004 District Peaks
* Switching Sequences and Effects of Load Transfer Under Coincident Peak Conditions

CIRCUIT NUMBER	COINCIDENT PEAK LOAD (MW)	(MX)	(MVA)	NUMBER CUSTOMERS	BACKUP CIRCUIT	BACKUP STATION	SWITCHING ACTIONS	BACKUP CIRCUIT LOAD (BEFORE TRANSFER) (MW)	(MX)	(MVA)	BACKUP CIRCUIT LOAD (AFTER TRANSFER) (MW)	(MX)	(MVA)	BACKUP CIRCUIT SCADA LIMITS NORMAL (MVA)	LTE (MVA)	STE (MVA)	TRIP (MVA)	PROBLEM AREAS
Orleans Substation																		
#89 Circuit is New DSS line to be formed off of #95 line																		
89	13.1	1.9	13.2	5000 (estimate)		89 Harwich	CLOSE T1-89-89 OPEN 8952	15.2	2.2	15.4	29.7	7.8	30.7	30	32	33	35	
#95 Line, POST-#89 Line Addition																		
95	19.6	4.0	20.0	5871 (estimate)		95 Harwich	CLOSE T1-95-95* OPEN 9552	16.0	1.6	16.1	36.3	8.7	37.3	27	34	36	38	#95 Ckt Flow Exceeds SCADA LTE, STE
											*Tie switch relocated post reconfig							
#82 Circuit feeds Orleans Local Sub (#950, #951, #952 4kV Circuits)																		
82	4.7	0.5	4.7	1986		82 Orleans	CLOSE T1-77-77 OPEN 8252	0.0	0.0	0.0	4.7	0.5	4.7	UNKNOWN			38	
#94 Line, POST-Wellfleet Swap																		
94	14.7	0.9	14.7	4475		94 Wellfleet	CLOSE T1-77-77 OPEN 9452	10.9	0.7	10.9	26.7	7.0	27.6	28	30	32	33	

2004 T&D OPERATING STUDY
Cape & Vineyard District

OTIS SUBSTATION #915

Otis Substation #915 serves a power supply area consisting of all or portions of the Towns of Bourne and Sandwich (including: The Massachusetts Military Reservation and Air National Guard Base, Sagamore, Monument Beach, Pocasset, and Cataumet). During the summer of 2003, peak station load coincident with Cape District on 8/16/03 20:00 hours was 19.1 MVA.

Otis Substation #915 consists of one 115/23.0 kV transformer:

#107: General Electric 16/21/26 [29] MVA 115/23.0 kV

Overload Ratings:

Transformer	Nameplate	Summer Normal Rating No Loss of Life	Summer 12 Hour LTE Rating 1% Loss of Life
#107	16/21/26 [29] MVA	30 MVA	33 MVA

Station Capabilities:

Total Station Capacity (N-0) Normal Ratings	Station Firm Capacity (N-1) LTE Ratings	Load Transfers (MVA)	Total LCC (LTE + Transfers)
30 MVA	0 MVA	30.0 MVA	30.0 MVA

Station Load Forecast:

2004	2005	2006	2007	2008
25.0 MW	25.5 MW	25.9 MW	26.3 MW	26.8 MW

Switching Actions:

Loss of #107 GE Transformer

Open: Circuit Switcher 10753
Main circuit breaker 10752
Feeder Breaker #8152
Feeder Breaker #7952
Feeder Breaker #8652

Close: Tie Switch #T1-81-81 (to Sandwich)
Tie Switch #T2-406-409 (ties #86 line to Hatchville #78 line)
Switch 7872 * at Otis Air Base Sub (to Hatchville #78 line)

Capacitor bank breakers 1153c and 1221c, as required.

* This is an automatic transfer switch. DO NOT use this to pick up Otis #86 line by backfeeding through the Otis bus, you will overload 6.8 miles of 1/0 copperweld conductor on #79 line, which is a US government-owned facility).

Distribution Feeder Switching:

For the #107 GE transformer outage, the Hatchville Substation #936 transformer and Sandwich #916 Substation transformer, carry full station load of 25.0 MW.

Contingency backup of each of the three (3) 23kV Otis DSS feeders can be accomplished, and the transfers and switching operations required to back each feeder up are shown on the attached table.

Total Transfer: 34.0 MVA

Summary of Concerns: Otis Substation #915

Station:

Based on load projections, Otis Substation #915 has adequate firm capability through load forecast year 2013 for a contingency outage of the GE 16/21/26 MVA transformer bank. Please reference power flow diagram **CV-18**.

As discussed at *Hatchville Substation #936*, the Otis Substation's 16/21/26 [28] MVA transformer is a limiting element for a contingency outage of the transformer at that station; based on this condition, the Otis Substation transformer has been proposed for upgrade to a 30/40/50 [56] MVA bank by Summer 2005.

A minor voltage and system protection violation arises in forecast year 2006 during the load transfer of the Otis #86 line to the Hatchville #78 line. Contingency backup is made through the underlying 23kV distribution system (the #406 and #409 circuits in the Clay Pond Road area), by feeding reclosers backwards. The installation of bypass switches around the reverse-fed reclosers would be required to continue this practice, and is discussed also at *Hatchville Substation #936*. Low voltages occur during the tied condition, starting at 0.94 per unit (within ANSI B range, but out of ANSI A range), falling to 0.90 per unit by Summer 2013. Installation of 1.8 MVAR switched capacitors on the #78 / #86 lines would address the low voltage condition.

Transmission:

From a station capacity perspective, contingency outages of either the #107 115kV line is not generally problematic at Otis Substation #915. Loss of the 115kV line is identical in performance to the single contingency outage of the Otis substation transformer that it serves.

Loss of the #107 line, if it also affects Falmouth Substation #933, which would result in the outage of two (2) 23kV transformer banks, may require load shedding, and is discussed further under the #107 line outage at *Bulk Transmission Facility Outages*.

DSS/Distribution:

1. Hatchville Substation #936 #78 Line may reach 25.8 MVA, which is 143% of 18.0 MVA SCADA LTE rating for contingency backup of Otis #86 Line, with a 20 MVA trip setting. The Phase conductor on the #78 line is 795 ACSR, capable of 49 MVA LTE rating, readjusting SCADA alarm and trip settings is recommended. Also, as discussed above, contingency backup is attained through the underlying #406/409

circuits by feeding reclosers backwards; installation of bypass switches on the affected reclosers is recommended.

Contingency backup of 23kV DSS feeders #81, and #79 are not problematic from a thermal or voltage performance standpoint.

Please refer to contingency switching on the attached Table.

23.0 kV Feeder	Backup Circuit	Summer LTE Rating in MVA	Projected % of LTE 2004	Projected % of LTE 2008
Otis #86	Hatchville #78	18 (SCADA)	143%	155%
		49 (795 ACSR)	38%	57%

5kV Class Substation and Distribution:

Otis Substation #915 feeds two (2) distribution substations of various primary voltages:

- Bourne Distribution Substation #945 23/4.8kV delta
- Sandwich Distribution Substation #919 23/8.32kV wye

The table below summarizes the capacity of these distribution stations versus forecasted Summer peak loads:

5kV Transformer	Normal Rating	2004 Projection	2008 Projection
Bourne 4.8kV	1.50 MVA*	1.6 MVA	1.7 MVA
Sandwich 8.32kV	5.00 MVA	5.3 MVA	5.7 MVA

**The Bourne Substation #945 1.5 MVA transformer has been replaced with a higher-rated unit.*

Proposed Integrated Plan:

The suggested actions table listed below will address all of the capacity concerns in the Otis Substation #915 power supply area.

Starting at the Summer 2005 load forecast year, a contingency outage of the Hatchville #936 30/40/50 MVA transformer bank will overload the Otis Substation #915 16/21/26 MVA transformer bank beyond its 33 MVA LTE rating. An upgrade of the Otis Substation transformer to a new 30/40/50 MVA unit is proposed, at an estimated cost of $1.5M.

Contingency backup of the Otis #86 line by tying to the Hatchville #78 line will require the installation of bypass switches around reclosers on the #406/#409 distribution circuits, at an estimated cost of $20k. Further, readjust SCADA Alarm and trip settings on Hatchville #78 line to match 49 MVA LTE rating of 795 ACSR conductor.

Recommended course of action for Otis Substation #915

Action	Year needed	Estimated Cost

⇒ Increase SCADA alarm / trip settings on Hatchville #78 line to 49 MVA	2004	$0
⇒ Upgrade Otis Substation #915 transformer to new 30/40/50 MVA unit	2005	TBD
⇒ Install bypass switches on reclosers #406/409 circuits	2004	$20k

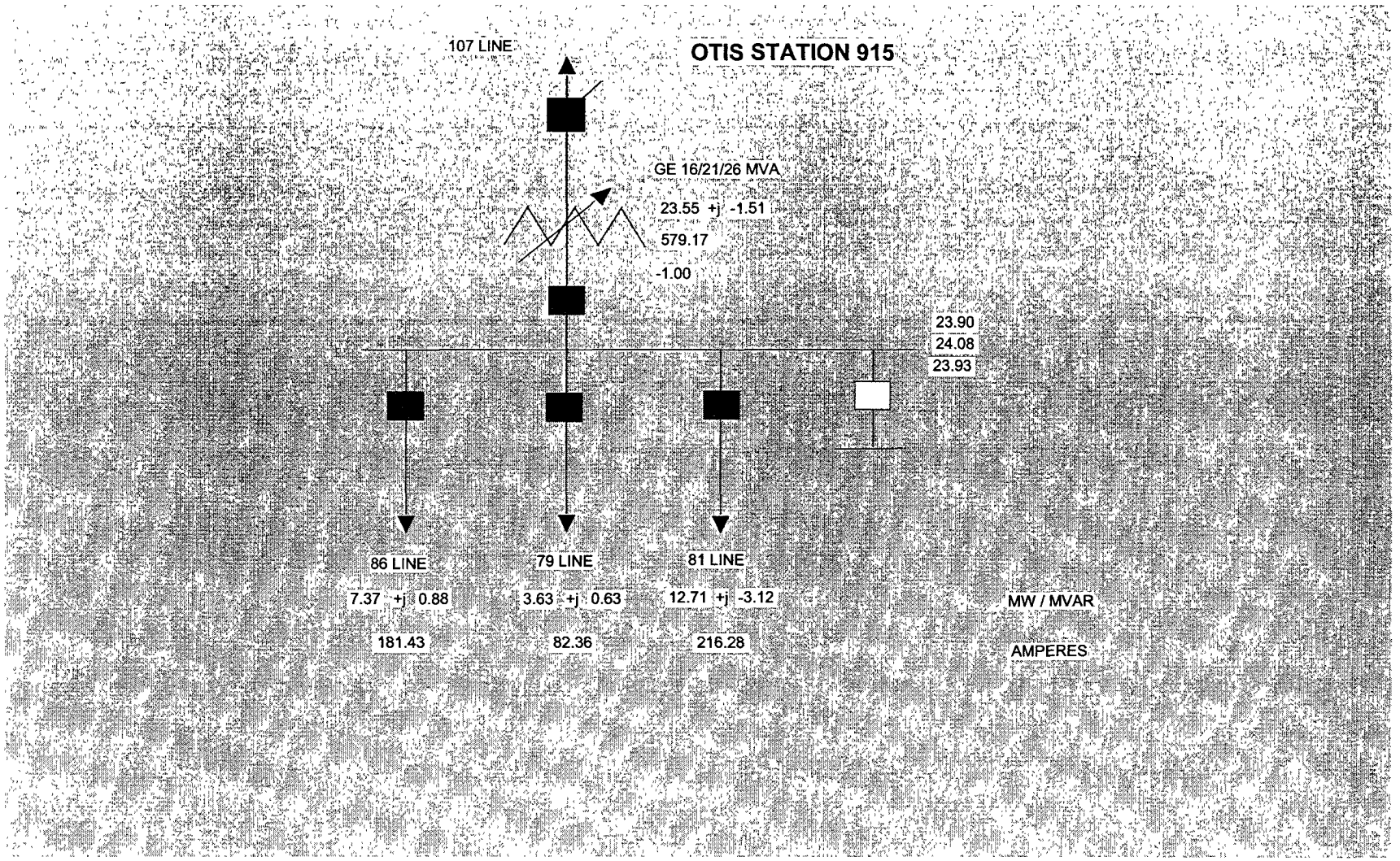
OTIS STATION 915
107 LINE
GE 16/21/26 MVA
23.55 +j -1.51
579.17
-1.00
23.90
24.08
23.93
86 LINE
79 LINE
81 LINE
7.37 +j 0.88
3.63 +j 0.63
12.71 +j -3.12
MW / MVAR
181.43
82.36
216.28
AMPERES

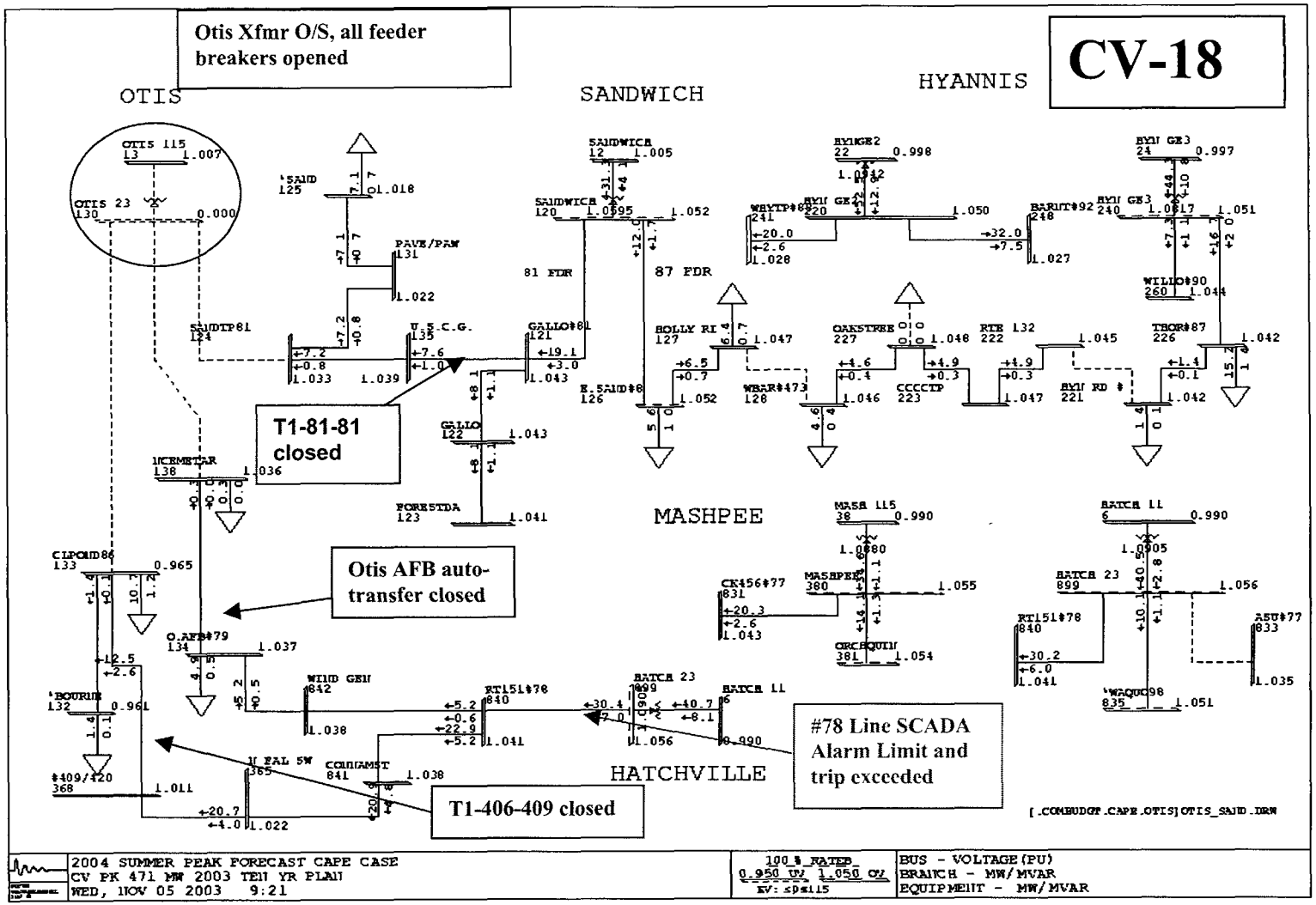
Otis Xfmr O/S, all feeder breakers opened
CV-18
OTIS
SANDWICH
HYANNIS
MASHPEE
HATCHVILLE
T1-81-81 closed
Otis AFB auto-transfer closed
#78 Line SCADA Alarm Limit and trip exceeded
T1-406-409 closed
2004 SUMMER PEAK FORECAST CAPE CASE
CV PK 471 MW 2003 TEN YR PLAN
WED, NOV 05 2003 9:21
BUS - VOLTAGE(PU)
BRANCH - MW/MVAR
EQUIPMENT - MW/MVAR

2003 5/10 Year Plan - Year 2004 DSS Line Load Transfers - Cape & Vineyard District

BULK SUBSTATION DSS LINE SINGLE-CONTINGENCY ANALYSIS

* Coincident Feeder peaks at Forecasted Summer 2004 District Peaks
* Switching Sequences and Effects of Load Transfer Under Coincident Peak Conditions

CIRCUIT NUMBER	COINCIDENT PEAK LOAD (MW)	(MX)	(MVA)	NUMBER CUSTOMERS	BACKUP CIRCUIT	BACKUP STATION	SWITCHING ACTIONS	BACKUP CIRCUIT LOAD (BEFORE TRANSFER) (MW)	(MX)	(MVA)	BACKUP CIRCUIT LOAD (AFTER TRANSFER) (MW)	(MX)	(MVA)	BACKUP CIRCUIT SCADA LIMITS NORMAL (MVA)	LTE (MVA)	STE (MVA)	TRIP (MVA)	PROBLEM AREAS
Otis Substation																		
79	5.3	0.7	5.3	3		78 Hatchville	CLOSE 7872 ** OPEN 7952	12.2	1.6	12.3	17.5	2.3	17.7	17	18	19	20	
** This is an automatic throw-over at Otis AFB 23kV Substation; Need to verify backfeed to serve National Cemetery																		
81	7.6	1.1	7.7	2006		81 Sandwich	CLOSE T1-81-81 OPEN 8152	11.4	1.6	11.5	19.1	3.0	19.3	24	26	27	28	
86	12.1	1.4	12.2	4425		78 Hatchville	* CLOSE T2-406-409 * OPEN 8652	12.2	1.6	12.3	25.1	6.1	25.8	17	18	18	20	#78 Ckt Flow Exceeds SCADA LTE and Trip Reverse flow through reclosers 406 and 409 Circuits Clay Pond Road area
*Recloser on #406 Circuit will see reverse flow.																		

2004 T&D OPERATING STUDY
Cape & Vineyard District

SANDWICH SUBSTATION #916

Sandwich Substation #916 serves a power supply area consisting of the majority of the Town of Sandwich. During the summer of 2003, peak station load coincident with Cape District on 8/16/03 20:00 hours was 27.6 MVA.

Sandwich Substation #916 consists of one 115/23.0 kV transformer:

#122: Magnetek 30/40/50 [56] MVA 115/23.0 kV

Overload Ratings:

Transformer	Nameplate	Summer Normal Rating No Loss of Life	Summer 12 Hour LTE Rating 1% Loss of Life
#122	30/40/50 [56] MVA	59 MVA	64 MVA

Station Capabilities:

Total Station Capacity (N-0) Normal Ratings	Station Firm Capacity (N-1) LTE Ratings	Load Transfers (MVA)	Total LCC (LTE + Transfers)
59 MVA	0 MVA	43.0 MVA	43.0 MVA

Station Load Forecast:

2004	2005	2006	2007	2008
23.4 MW	23.7 MW	24.0 MW	24.3 MW	24.7 MW

Switching Actions:

Loss of #122 Magnetek Transformer

Open: Circuit Switcher 12213
Main circuit breaker 12232
Feeder Breaker #8162 (at Sandwich)
Feeder Breaker #8762 (at Sandwich)
Feeder Breaker #8652 (at Otis) *

Close: Tie Switch #T1-81-81 (to Otis)
Tie Switch #T1-87A-87B (to Oak Street #920)
Tie Switch #T2-406-409 (to Hatchville #936) *

Capacitor Bank breakers 1222c, 1075c as required.

* Transfer the Otis #86 line to the Hatchville #78 line BEFORE transferring the #81 line from Sandwich to Otis; otherwise, you will overload the Otis Substation transformer

Distribution Feeder Switching:

For the #122 Magenetek transformer outage, the Otis Substation #915 transformer, Oak Street #920 Substation transformer, and Hatchville #936 substation transformer, carry full station load of 25.0 MW.

Contingency backup of each of the three (3) 23kV Sandwich DSS feeders can be accomplished, and the transfers and switching operations required to back each feeder up are shown on the attached table.

Total Transfer: 43.0 MVA

Summary of Concerns: Sandwich Substation #916

Station:

Based on load projections, Sandwich Substation #916 has adequate firm capability through load forecast year 2013 for a contingency outage of the GE 16/21/26 MVA transformer bank. Please reference power flow diagrams **CV-19** through **CV-20.**

As discussed under *Otis Substation #915* and *Hatchville Substation #936,* to prevent overload of the Otis 16/21/26 MVA transformer during the tie of the #81 line from Sandwich to Otis, the #86 line must be tied to the Hatchville #78 line through the underlying 23kV system (#406/409 circuits) by feeding reclosers backwards. This tied condition also experiences low voltage conditions starting in the Summer 2006 load forecast year. These deficiencies are described in the writeups for those two power supply areas, please see *Otis* and *Hatchville* for remedies and cost estimates.

Also, as described at Otis and Hatchville, the Otis 16/21/26 MVA transformer is identified as a limiting element for the backup of Hatchville Substation #936; the Otis Substation transformer is proposed for upgrade to a new 30/40/50 MVA unit by Summer 2005. This upgrade would simplify the switching for contingency backup of Sandwich Substation #916. The transformer upgrade is further discussed under *Hatchville Substation #936.*

Transmission:

From a station capacity perspective, contingency outages of either the #122 115kV line is not generally problematic at Sandwich Substation #916. Loss of the 115kV line is identical in performance to the single contingency outage of the Sandwich substation transformer that it serves.

Loss of the #122 line, if it also affects Oak Street Substation #920, which would result in the outage of two (2) 23kV transformer banks, may require load shedding, and is discussed further under the #122 line outage at *Bulk Transmission Facility Outages*.

DSS/Distribution:

Contingency backup of 23kV DSS feeders #81 and #87 are not problematic from a thermal or voltage performance standpoint.

Please refer to contingency switching on the attached Table.

5kV Class Substation and Distribution:

Sandwich Substation #916 does not serve any 5kV class distribution substations or circuits. Some 5kV stepdown areas exist off of the 23kV system.

Proposed Integrated Plan:

The Sandwich Substation #916 power supply area has no identified capital upgrade needs through the year 2013 load forecast horizon.

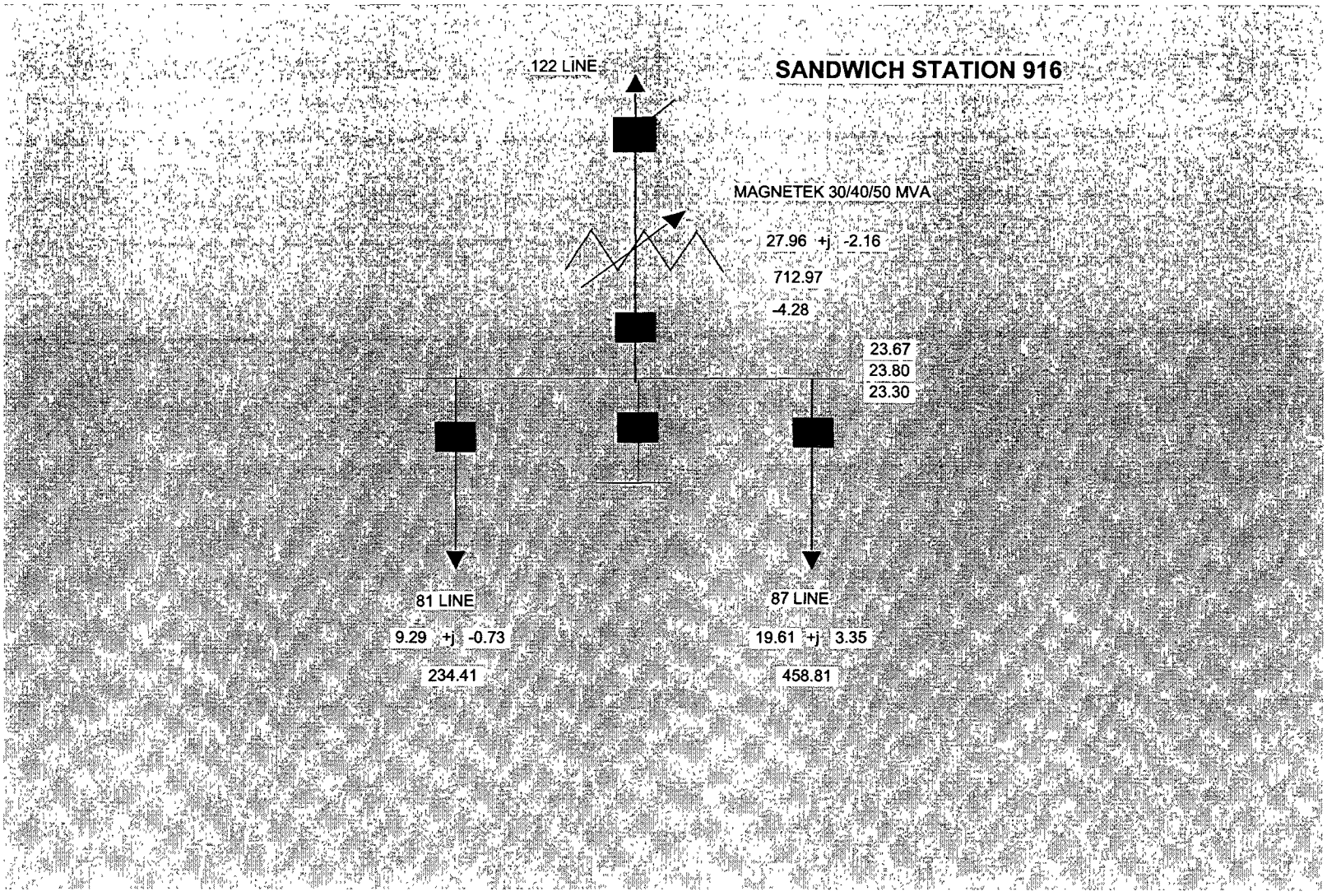
SANDWICH STATION 916
122 LINE
MAGNETEK 30/40/50 MVA
27.96 +j -2.16
712.97
-4.28
23.67
23.80
23.30
81 LINE
9.29 +j -0.73
234.41
87 LINE
19.61 +j 3.35
458.81

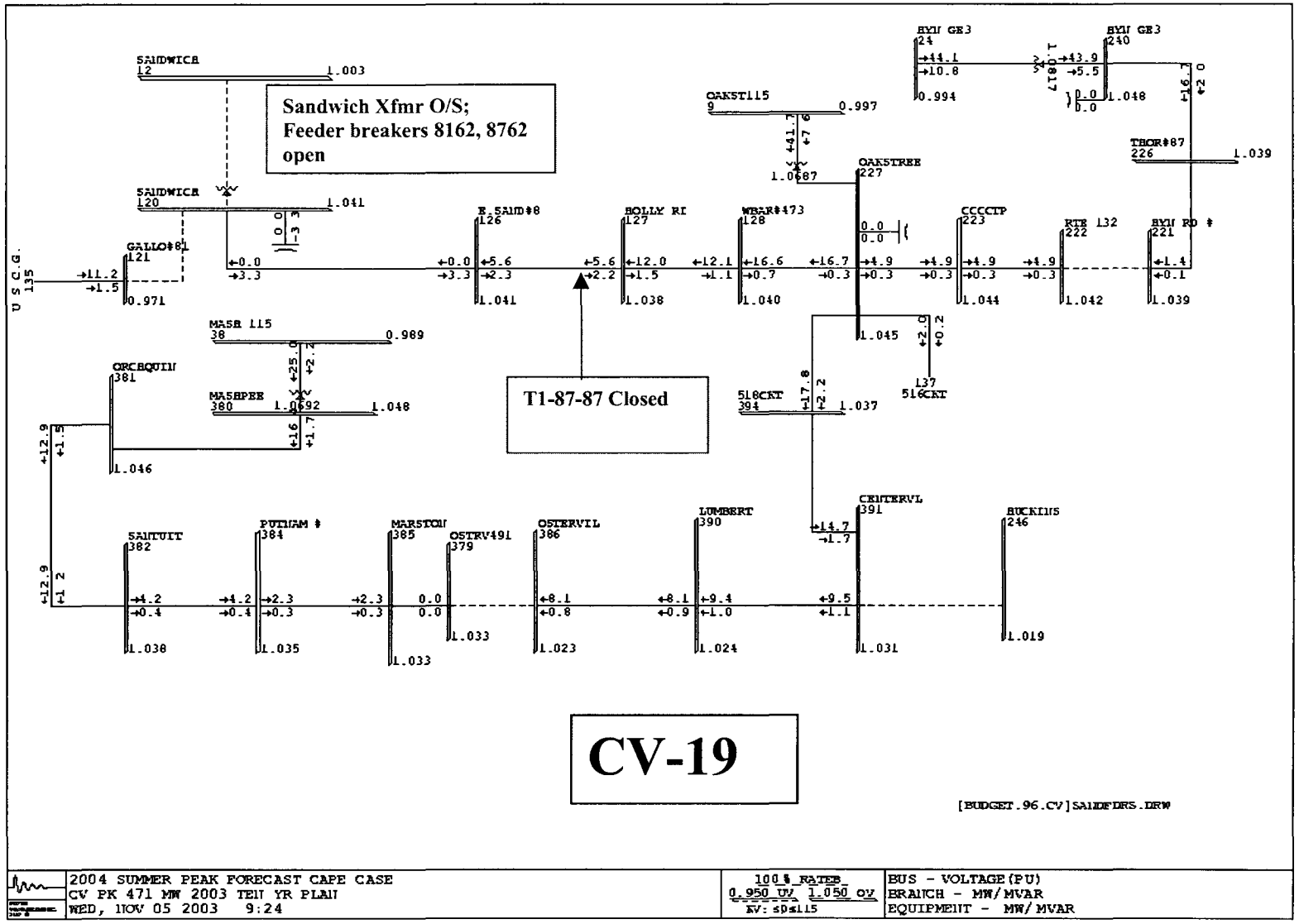
Sandwich Xfmr O/S;
Feeder breakers 8162, 8762
open
T1-87-87 Closed
SANDWICH 12 1.003
SANDWICH 120 1.041
GALLO#8 121 0.971
U S C.G. 135
E.SAND#8 126 1.041
HOLLY RI 127 1.038
WBAR#473 128 1.040
OAKSTREE 227 1.045
OAKST115 9 0.997
HYU GE3 24 0.994
HYU GE3 240 1.048
THOR#87 226 1.039
CCCCTP 223 1.044
RTE 132 222 1.042
HYU RD # 221 1.039
137 516CKT
516CKT 394 1.037
MASH 115 38 0.989
MASHPEE 380 1.048
ORCHQUIN 381 1.046
SANTUIT 382 1.038
PUTNAM # 384 1.035
MARSTON 385 1.033
OSTRV491 379 1.033
OSTERVIL 386 1.023
LUMBERT 390 1.024
CENTERVL 391 1.031
BUCKLNS 246 1.019
[BUDGET.96.CV]SANDFDRS.DRW
2004 SUMMER PEAK FORECAST CAPE CASE
CV PK 471 MW 2003 TEN YR PLAN
WED, NOV 05 2003 9:24
100% RATED
0.950 UV 1.050 OV
KV: 50&115
BUS - VOLTAGE(PU)
BRANCH - MW/MVAR
EQUIPMENT - MW/MVAR

CV-19

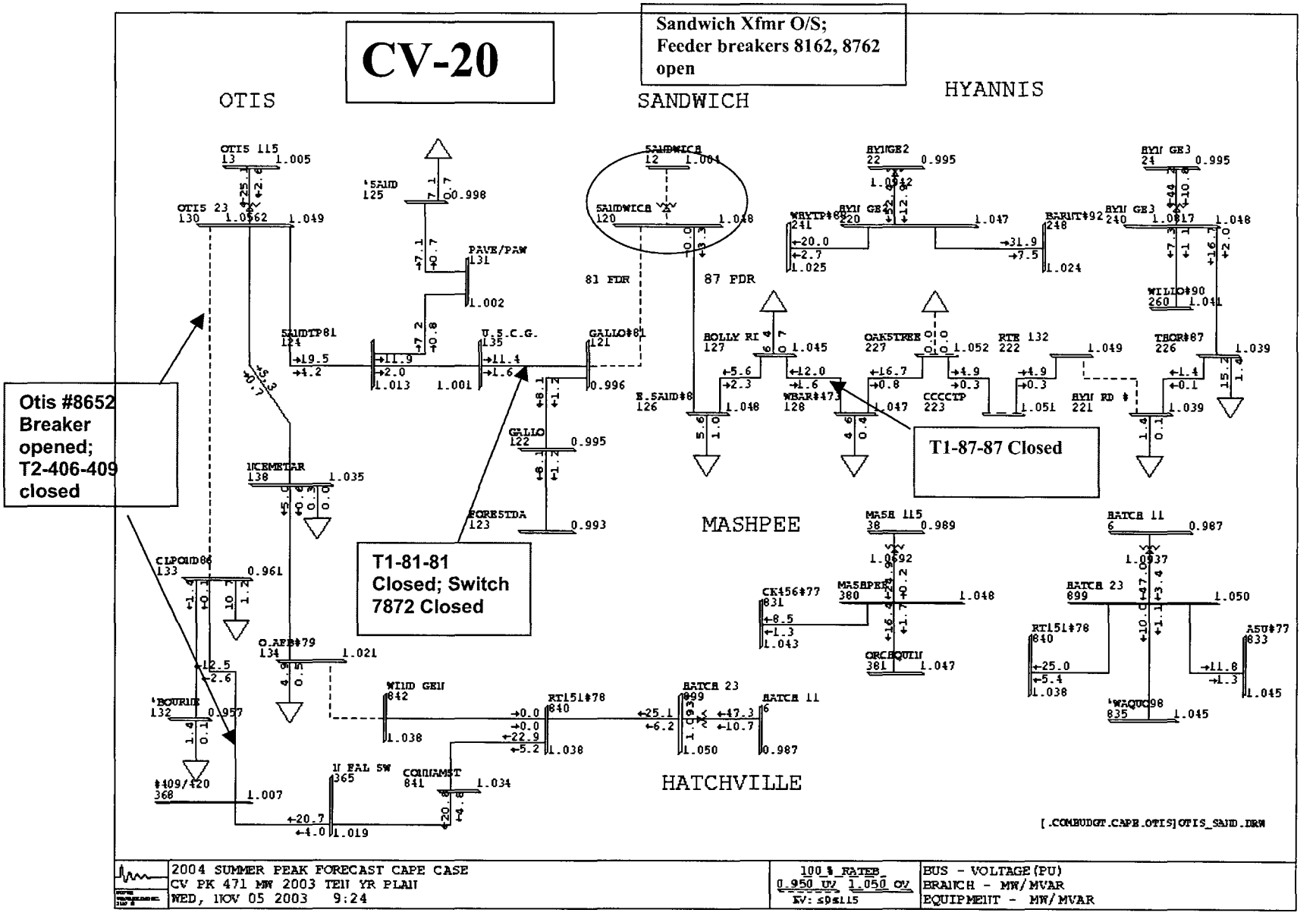
CV-20
Sandwich Xfmr O/S;
Feeder breakers 8162, 8762
open
OTIS
SANDWICH
HYANNIS
MASHPEE
HATCHVILLE
Otis #8652
Breaker
opened;
T2-406-409
closed
T1-81-81
Closed; Switch
7872 Closed
T1-87-87 Closed
81 FDR
87 FDR
[.COMBUDGT.CAPE.OTIS]OTIS_SAND.DRW
2004 SUMMER PEAK FORECAST CAPE CASE
CV PK 471 MW 2003 TEN YR PLAN
WED, NOV 05 2003 9:24
100 % RATEB
0.950 UV 1.050 OV
KV: ≤9≤115
BUS - VOLTAGE(PU)
BRANCH - MW/MVAR
EQUIPMENT - MW/MVAR

2003 5/10 Year Plan - Year 2004 DSS Line Load Transfers - Cape & Vineyard District

BULK SUBSTATION DSS LINE SINGLE-CONTINGENCY ANALYSIS

* Coincident Feeder peaks at Forecasted Summer 2004 District Peaks
* Switching Sequences and Effects of Load Transfer Under Coincident Peak Conditions

CIRCUIT NUMBER	COINCIDENT PEAK LOAD (MW)	(MX)	(MVA)	NUMBER CUSTOMERS	BACKUP CIRCUIT	BACKUP STATION	SWITCHING ACTIONS	BACKUP CIRCUIT LOAD (BEFORE TRANSFER) (MW)	(MX)	(MVA)	BACKUP CIRCUIT LOAD (AFTER TRANSFER) (MW)	(MX)	(MVA)	BACKUP CIRCUIT SCADA LIMITS NORMAL (MVA)	LTE (MVA)	STE (MVA)	TRIP (MVA)	PROBLEM AREAS
Sandwich Substation																		
81	11.4	1.6	11.5	3881		81 Otis	CLOSE T1-81-81 OPEN 8162 BKR	7.6	1.1	7.7	19.5	4.2	19.9	27	28	30	32	
		Swap 79 to Hatchville 78				78 Hatchville	OPEN 7952 CLOSE 7872 **	12.2	1.4	12.3	17.5	2.3	17.7	17	18	19	20	This transfer must be done to prevent overload of Otis Xfmr
** This is an automatic throw-over at Otis AFB 23kV Substation; Need to verify backfeed to serve National Cemetery																		
87	12.0	1.7	12.1	8611		87 Oak Street	CLOSE T1-87W-87W OPEN 8762 BKR	4.6	0.4	4.6	16.8	2.9	17.0	50	50	50	?	

2004 T&D OPERATING STUDY
Cape & Vineyard District

WELLFLEET SUBSTATION #976

Wellfleet Substation #976 serves a power supply area consisting of all or portions of the Towns of Wellfleet, Truro, and Provincetown. During the summer of 2003, peak station load coincident with Cape District on 8/16/03 20:00 hours was 30.6 MVA.

Wellfleet Substation #976 consists of two 115/23.0 kV transformers:

#1: General Electric 12/16/20 MVA 115/23.0 kV
#2: Moloney 16/21/26 MVA 115/23.0 kV

Overload Ratings:

Transformer	Nameplate	Summer Normal Rating No Loss of Life	Summer 12 Hour LTE Rating 1% Loss of Life
#1 GE	12/16/20 MVA	22 MVA	25 MVA
#2 Moloney	16/21/26 MVA	28 MVA	31 MVA

Station Capabilities:

Total Station Capacity (N-0) Normal Ratings	Station Firm Capacity (N-1) LTE Ratings	Load Transfers (MVA)	Total LCC (LTE + Transfers)
50 MVA	25 MVA * 0 MVA *	23.6 MVA 23.6 MVA	48.6 MVA 23.6 MVA

Station Load Forecast:

2004	2005	2006	2007	2008
32.8 MW	33.0 MW	33.2 MW	33.5 MW	34.0 MW

**Firm capacity for loss of the most-limiting transformer is 25 MVA. Firm capacity for loss of the #125 line (the only transmission line into the station), is zero (0) MVA.*

Switching Actions:

Loss of #1 GE 12/16/20 MVA Transformer

Open: Circuit Switcher 12553
Main circuit breaker 12552

Close: Tie Switch #T1-94-94 (to Orleans)
Capacitor Bank breakers 1255C *

*The 4.8 MVAR capacitor on the #1 23kV bus is used to provide voltage support for the #94 line while it is tied to Orleans. Low voltages will occur if not switched in this manner.

Loss of #2 Moloney 16/21/26 MVA Transformer

Open: Circuit Switcher 12563
Main circuit breaker 12562
Feeder Breaker #9462

Close: Wellfleet 23kV bus tie breaker #T1-N-S
* Tap changers must be in same position, and off.

Tie Switch #T1-94-94 (to Orleans)

Capacitor Bank breakers 1255C and 1256c, as needed.

Distribution Feeder Switching:

For the #1 (GE) transformer outage, the #94 line must be transferred to Orleans. The Moloney 16/21/26 MVA transformer cannot carry both the #94 and #96 line total load of 32.8 MW.

For the #2 (Moloney) transformer outage, the #94 line must be transferred to Orleans. The GE 12/16/20 MVA transformer cannot carry both the #94 and #96 line total load of 32.8 MW.

In either circumstance (outage of #1 or #2 transformer), there is adequate station capacity through load forecast year 2011, when the GE 12/16/20 MVA transformer becomes the limiting element for the single contingency outage of the Moloney 16/21/26 MVA bank.

Contingency backup of each of the two (2) 23kV Wellfleet DSS feeders can be accomplished, and the transfers and switching operations required to back each feeder up are shown on the attached table.

Total Transfer: 23.6 MVA

Summary of Concerns: Wellfleet Substation #976

Station:

Based on load projections, Wellfleet Substation #976 has adequate firm capability through load forecast year 2011 for a contingency outage of either transformer bank. Please reference power flow diagrams **CV-21** and **CV-22**.

Beginning in Summer 2011, the GE 12/16/20 MVA transformer becomes the limiting element for the single contingency outage of the Moloney 16/21/26 MVA bank. Due to the limited number of foreseeable options for the area (since this is the last Bulk Substation on the Cape, at the end of the 115kV transmission system), the most realistic upgrade alternative is to upgrade the #1 GE transformer bank to a new 30/40/50 MVA unit by Summer 2011.

Transmission:

From a station capacity perspective, a single contingency outage of the #125 115kV transmission lines is problematic at Wellfleet Substation #976. This is the only 115kV line serving the station, which is the last 115/23kV station on the Cape. A single contingency outage of the #125 line forces both transformers at Wellfleet out of service, which cannot be supported at current and forecasted

Summer peak load levels, and will require load shedding until the transmission line, and at least one outaged transformer, is restored to service. This situation is discussed in further detail under the #125 line outage at *Bulk Transmission Facility Outages*.

DSS/Distribution:.

Contingency backup of 23kV DSS feeders #94 and #96 are not problematic from a thermal or voltage performance standpoint.

Contingency backup of the #96 DSS line cannot be fully supported by the #1 GE 12/16/20 MVA transformer. Transfer of a portion of the #94 line to Orleans Substation #975 must be accomplished before attempting to back up the #96 line, at Summer peak load levels. The recommended switching is on the attached Table.

5kV Class Substation and Distribution:

Wellfleet Substation #976 feeds four (4) distribution substations of various primary voltages:

- Wellfleet Distribution Substation #992 23/8.32kV wye
- N. Eastham Substation #962 23/4.8kV delta
- Provincetown East Substation #981 23/4.16kV wye
- Provincetown West Substation #983 23/4.16kV wye

The table below summarizes the capacity of these distribution stations versus forecasted Summer peak loads:

5kV Transformer	Normal Rating	2004 Projection	2008 Projection
Wellfleet 8.32kV wye	3.33 MVA*	**2.8 MVA**	**2.9 MVA**
N. Eastham 4.8kV delta	2.5 MVA	**2.4 MVA**	2.5 MVA
P'Town East 4.16kV	3.75 MVA	**2.6 MVA**	**2.7 MVA**
P'Town West 4.16kV	3.75 MVA	**1.5 MVA**	**1.6 MVA**

**Reflects addition of fans to increase top nameplate rating of transformer by 33%*

Proposed Integrated Plan:

The suggested actions table listed below will address all of the capacity concerns in the Wellfleet Substation #976 power supply area.

The GE 12/16/20 MVA transformer has been identified as a limiting element for the single contingency outage of the Moloney 16/21/26 MVA bank. The most realistic upgrade alternative is to upgrade the #1 GE transformer bank to a new 30/40/50 MVA unit by Summer 2011, at a cost estimate that will be determined later.

The limitations associated with loss of the #125 line, and resultant required load shedding at Wellfleet, are discussed at *Bulk Transmission Facility Outages* as a transmission deficiency.

Marginal all-facilities-in overloads beyond top nameplate rating of the transformer at the N. Eastham distribution substation can be addressed by the addition of thermostatically-controlled fans to increase the top nameplate ratings of the transformer by about 33%. This is estimated at $12k per installation.

Recommended course of action for Wellfleet Substation #976

Action	Year needed	Estimated Cost
⇒ Upgrade #1 GE 12/16/20 MVA transformer to new 30/40/50 MVA unit	2011	$TBD

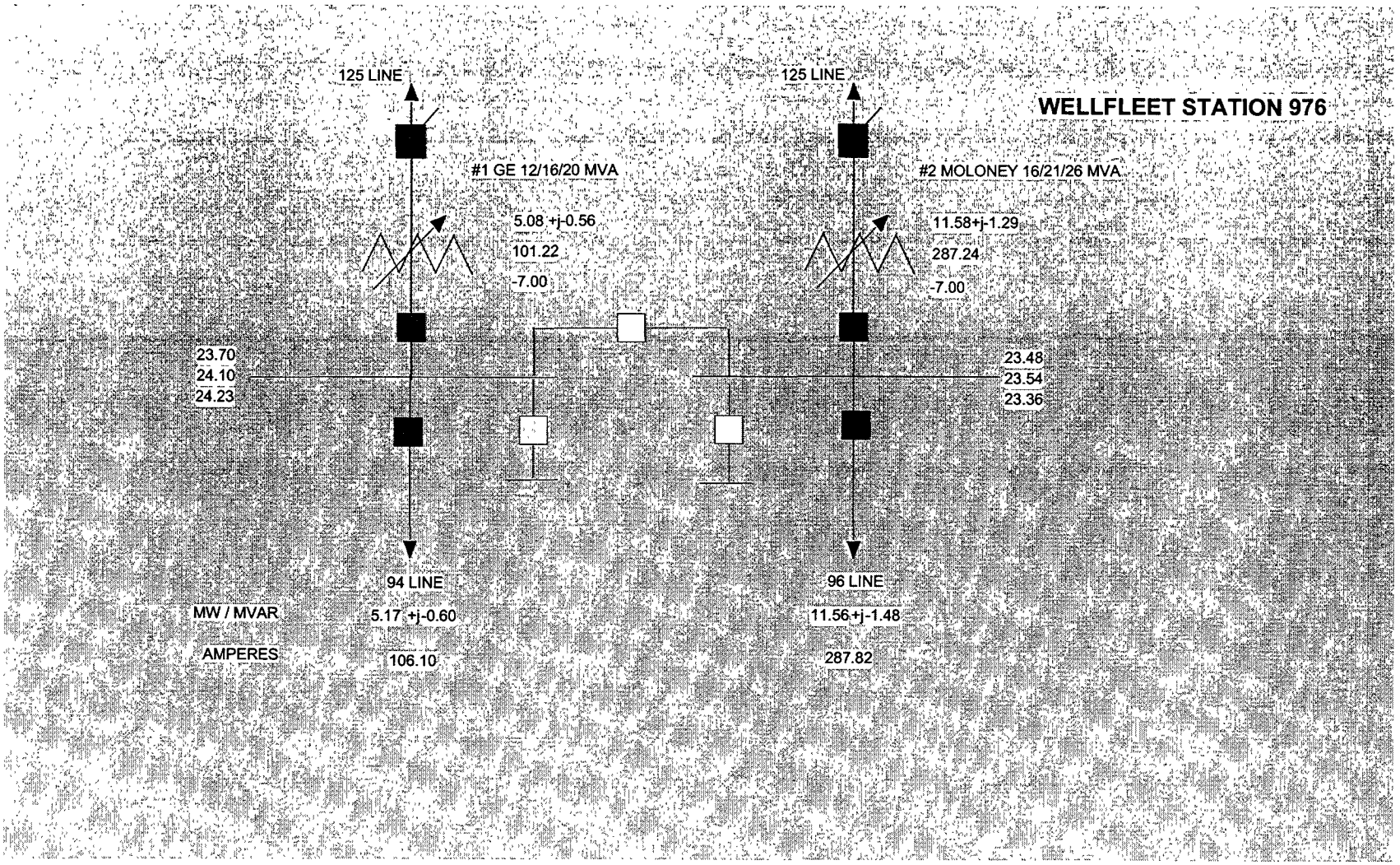
WELLFLEET STATION 976
125 LINE
125 LINE
#1 GE 12/16/20 MVA
#2 MOLONEY 16/21/26 MVA
5.08 +j-0.56
101.22
-7.00
11.58+j-1.29
287.24
-7.00
23.70
24.10
24.23
23.48
23.54
23.36
94 LINE
96 LINE
MW / MVAR
5.17 +j-0.60
11.56+j-1.48
AMPERES
106.10
287.82

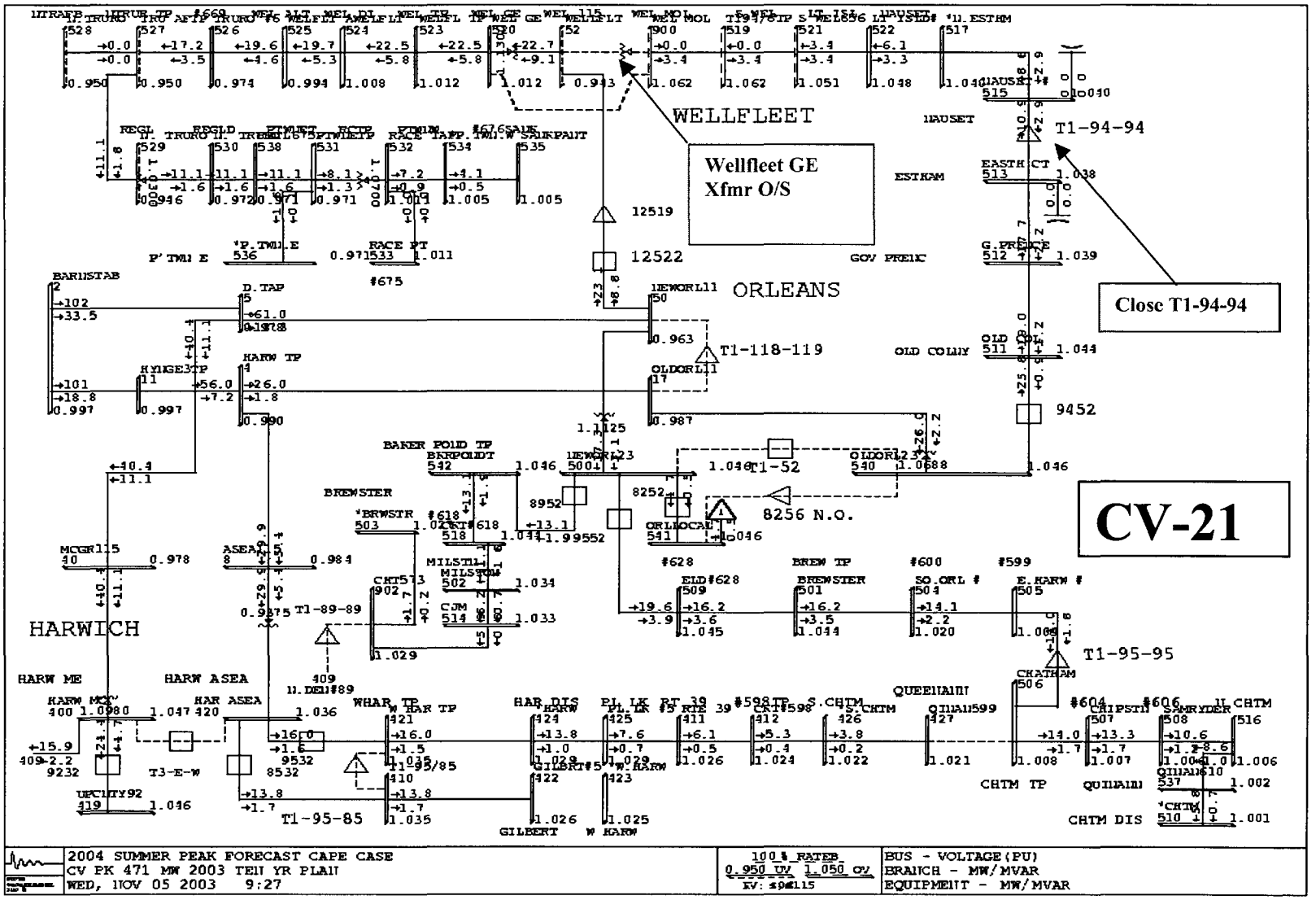
WELLFLEET
Wellfleet GE
Xfmr O/S
Close T1-94-94
T1-94-94
ORLEANS
T1-118-119
T1-52
8256 N.O.
CV-21
HARWICH
T1-89-89
T1-95-95
T1-95-85
2004 SUMMER PEAK FORECAST CAPE CASE
CV PK 471 MW 2003 TEN YR PLAN
WED, NOV 05 2003 9:27
100% RATEB
0.950 UV 1.050 OV
BUS - VOLTAGE(PU)
BRANCH - MW/MVAR
EQUIPMENT - MW/MVAR

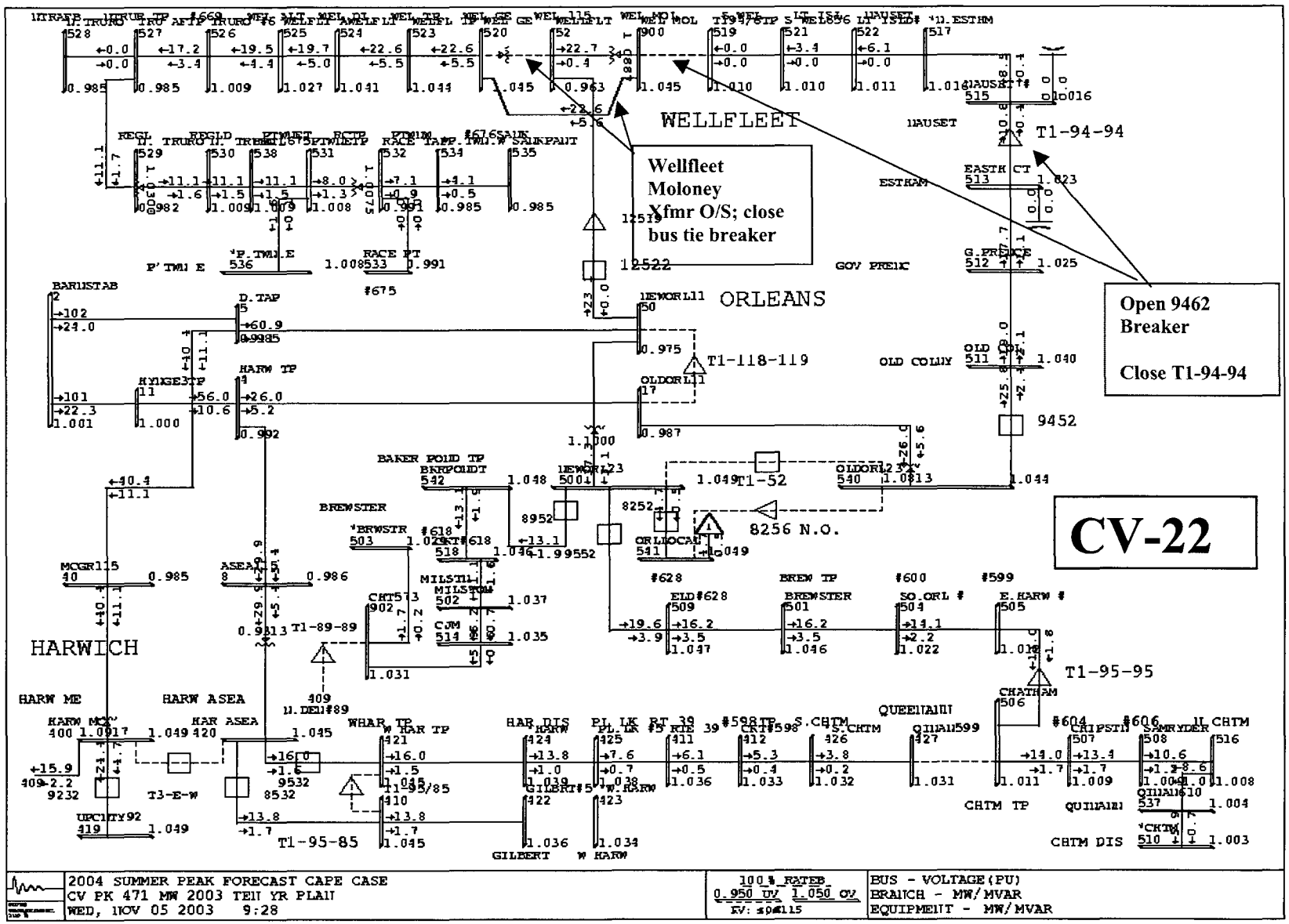
WELLFLEET
Wellfleet
Moloney
Xfmr O/S; close
bus tie breaker
T1-94-94
Open 9462
Breaker
Close T1-94-94
ORLEANS
T1-118-119
T1-52
8256 N.O.
CV-22
HARWICH
T1-89-89
T1-95-95
T1-95-85
T3-E-W
2004 SUMMER PEAK FORECAST CAPE CASE
CV PK 471 MW 2003 TEN YR PLAN
WED, NOV 05 2003 9:28
100% RATEB
0.950 UV 1.050 OV
BUS - VOLTAGE(PU)
BRANCH - MW/MVAR
EQUIPMENT - MW/MVAR

2003 5/10 Year Plan - Year 2004 DSS Line Load Transfers - Cape & Vineyard District

BULK SUBSTATION DSS LINE SINGLE-CONTINGENCY ANALYSIS

* Coincident Feeder peaks at Forecasted Summer 2004 District Peaks
* Switching Sequences and Effects of Load Transfer Under Coincident Peak Conditions

CIRCUIT NUMBER	COINCIDENT PEAK LOAD (MW)	(MX)	(MVA)	NUMBER CUSTOMERS	BACKUP CIRCUIT	BACKUP STATION	SWITCHING ACTIONS	BACKUP CIRCUIT LOAD (BEFORE TRANSFER) (MW)	(MX)	(MVA)	BACKUP CIRCUIT LOAD (AFTER TRANSFER) (MW)	(MX)	(MVA)	BACKUP CIRCUIT SCADA LIMITS NORMAL (MVA)	LTE (MVA)	STE (MVA)	TRIP (MVA)	PROBLEM AREAS
Wellfleet Substation																		
96	22.6	5.8	23.3	9861		94 Wellfleet	CLOSE T1-84-96 OPEN 9662	10.9	0.7	10.9	27.7	0.4	27.7	28	30	32	33	One Wellfleet 3 MVAR cap in service
						94 Orleans	CLOSE T1-94-94 OPEN 9462	14.7	0.8	14.7	25.8	2.4	25.9	32	34	36	38	Orleans AC 3 MVAR cap in service
94	10.9	0.7	10.9	4936		94 Orleans	CLOSE T1-94-94 OPEN 9462	14.7	0.8	14.7	25.8	2.4	25.9	32	34	36	38	Orleans AC 3 MVAR cap in service

Cape & Vineyard Electric Co. linemen at Oak Bluffs Generating Facility, circa 1920's

Martha's Vineyard 23kV Submarine Cable Supply

Bulk Distribution Facility Outages

Thermal Results and Remedial Switching Action

2004 T&D OPERATING STUDY
Cape & Vineyard District

MARTHA'S VINEYARD 23KV SUBMARINE CABLE SUPPLY

The Martha's Vineyard power supply area is served out of Falmouth Substation #933, and consists of the Towns of Oak Bluffs, Edgartown, Tisbury, W. Tisbury, Chilmark, and Aquinnah.

During the summer of 2003, Martha's Vineyard peak load coincident with Cape District on 8/16/03 20:00 hours was 42.6 MVA.

The Martha's Vineyard power supply area is served by four (4) 23kV submarine cables. The conductor size, ratings, and terminals for these four cables are described on the attached Table, and are summarized below:

Submarine Cable Ratings:

#91 Cable, Elm Road x West Chop *

250 kcmil Submarine Type Cable

Summer Normal	17 MVA
Summer Emergency	18.4 MVA
Winter Normal	17 MVA
Winter Emergency	19.7 MVA

#97 Cable, Elm Road x West Chop *

350 kcmil Submarine Type Cable

Summer Normal	17 MVA
Summer Emergency	18.4 MVA
Winter Normal	17 MVA
Winter Emergency	19.7 MVA

**** A single-contingency outage of the Falmouth-Elm Rd. #97 line takes both cables O/S.***

#99 Cable, Falmouth x Oak Bluffs

350 kcmil Land (Falmouth Sub. to Shore St.) and Submarine (Shore St. to Oak Bluffs) Type Cable

*Winter ratings not listed in SCADA Alarm book, same as Summer assumed.

Summer Normal	17 MVA
Summer Emergency	19.7 MVA
Winter Normal	17 MVA*
Winter Emergency	19.7 MVA*

#75 Cable, Falmouth x Oak Bluffs

350 kcmil Submarine Type Cable to Shore St. / Clinton Street manhole, Falmouth, then 700 kcmil land cable to Falmouth Substation #933. The submarine cable is de-rated to 8.5 MVA LTE due to cable defects.

Summer Normal	7 MVA
Summer Emergency	8.5 MVA
Winter Normal	7 MVA
Winter Emergency	8.5 MVA

NORMAL OPERATION WITH ALL FOUR CABLES IN SERVICE

Diagram #CV-23 shows normal power flows for Martha's Vineyard with existing four cables (91, 97, 99, and 75 cables) on the Island with existing switching configuration. This diagram reflects Summer 2004 forecasted loading conditions of 45.6 MW.

Preferred Configuration:

99 CABLE: (Peak Load: 12.6 + j1.9)

Oak Bluffs Dist Sub (#124 Ckt)
Martha's Vineyard Hospital (Ckt #221)
Katama (Ckt #123)
97B (Edgar Town-V.Haven Rd)
97E LineCkt #224
Circuit #223.

97 CABLE: (Peak Load: 17.7 +j2.7)

Vineyard Haven Distribution Sub. (#121 & #122 Ckts)
Doger's Hole and State Forest Rd load)
Circuit #225

Edgartown Distribution Sub and Circuit #123
Mirant's Oak.Bluffs Generation (8.1 MW) *

91 CABLE: (Peak Load: 14.1 +j0.7)

#222 Ckt (Cove Road)
91 Distribution load on County Road
226 and 220 Circuits on South Road
Chilmark (Bettlebung) Distribution Sub (#126 Ckt)
Load on Edgartown-W.Tisbury Road
Mirant's West Tisbury Generation (5.4 MW) *

75 CABLE: (Peak Load: 2.4 +j0.2)

Oak Bluffs Dist Sub (#124 Ckt)

*Note: Total Vineyard Generation = 13.5 MW, of which 10 MW is FIRM per contract with Mirant. Contract expires December 2008.

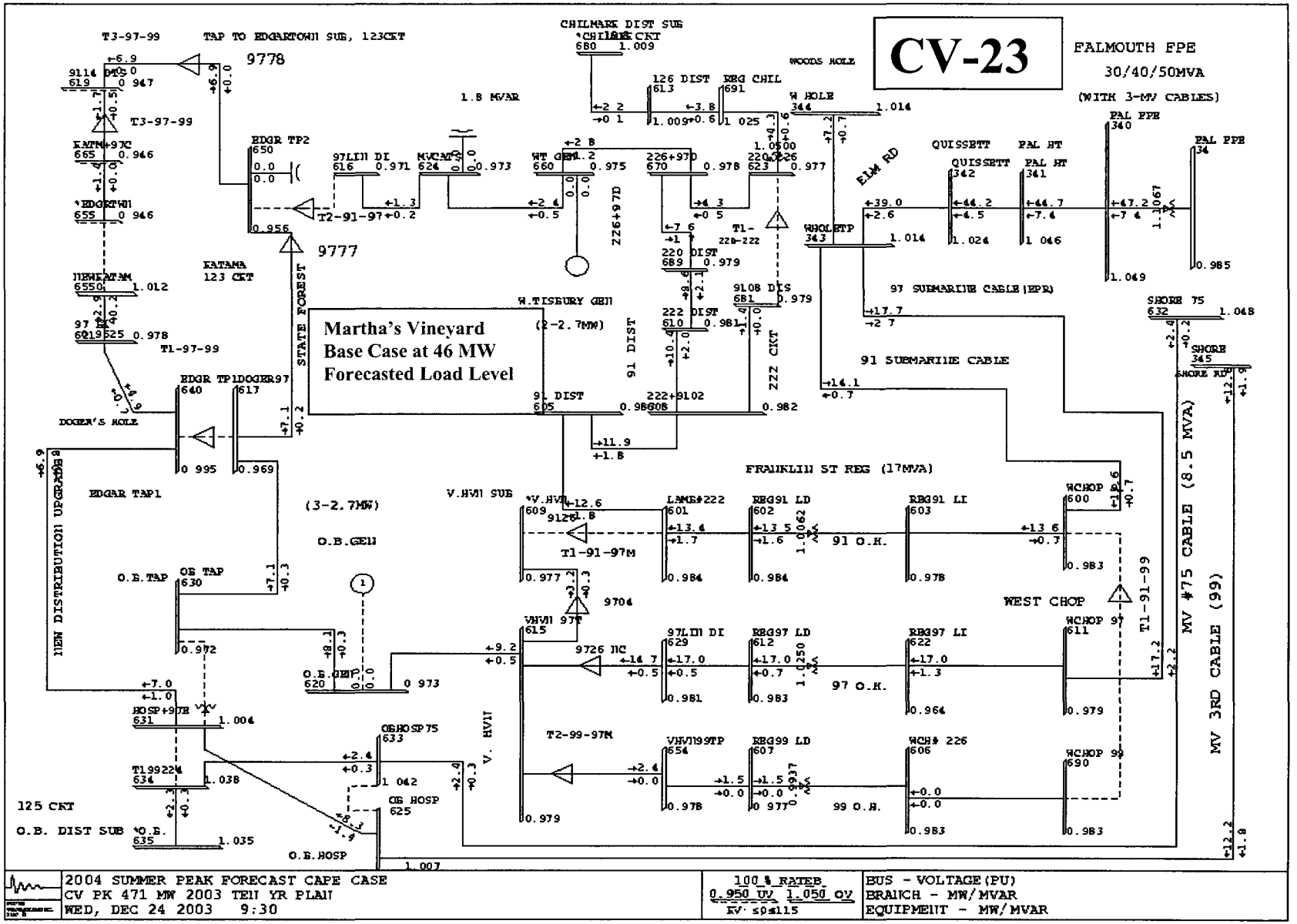

2004 SUMMER PEAK FORECAST CAPE CASE CV PK 471 MW 2003 TEN YR PLAN WED, DEC 24 2003 9:30	100 % RATEB 0.950 UV 1.050 OV KV: ≤9≤115	BUS - VOLTAGE(PU) BRANCH - MW/MVAR EQUIPMENT - MW/MVAR

SWITCHING SEQUENCE AND LOAD FLOW FOR EACH CABLE OUTAGE

Single-Contingency 23kV Submarine Cable Outages:

At Forecasted 46 MW Load Level:

91 cable outage conditions:
(Load flow #CV-24)

Open Switch #9186 at Elm Rd
Open Switch #9157 at W. Chop
Open #9722 Breaker at Vineyard Haven
Close T1-91-97 Switch at Vineyard Haven
Close T1-97-99 at Doger's Hole
Recloser T1-99-224 open (#75 cable feeds Oak Bluffs #124 Circuit)
3.9 MW Generation at Oak Bluffs
5.4 MW Generation at W. Tisbury

Cable Loadings at 46 MW peak:

#99	17.1 +j 1.3	Ratings 17 / 22.5 MVA
#97	16.4 -j 0.8	Ratings 17 / 18.4 MVA
#75	2.4 +j 0.2	Rating 8.5 MVA

Generation Schedule For Daily Load Cycle:

DISPATCH GUIDE:

These generation dispatches attempt to keep the #97 and #99 cable flows at or Near 17 MVA normal ratings.

M.V. Load Level	Oak Bluffs Gen.	W. Tisbury Gen.	#97 Load	#99 Load	#75 Load
32 MW	0	0	12.8 MW	17.8 MW	3.3 MW
33 MW	1.0 MW	0	13.2 MW	17.2 MW	3.4 MW
34 MW	1.0 MW	0	13.6 MW	17.7 MW	3.5 MW
35 MW	2.0 MW	0	14.0 MW	17.3 MW	3.6 MW
36 MW	3.0 MW	0	14.4 MW	16.9 MW	3.7 MW
37 MW	3.5 MW	0	14.8 MW	16.9 MW	3.8 MW
38 MW	4.0 MW	0	15.3 MW	16.9 MW	4.0 MW
39 MW	4.5 MW	0	15.7 MW	16.8 MW	4.1 MW
40 MW	5.0 MW	0	16.1 MW	17.0 MW	4.2 MW
41 MW	5.5 MW	0	16.5 MW	17.0 MW	4.3 MW
42 MW	6.0 MW	0	17.0 MW	17.0 MW	4.4 MW
43 MW	6.5 MW	0	17.4 MW	16.9 MW	4.5 MW
44 MW	7.0 MW	1.0 MW	16.7 MW	16.9 MW	4.6 MW
45 MW	7.5 MW	1.0 MW	17.1 MW	17.1 MW	4.7 MW
46 MW	8.0 MW (max)	2.0 MW	16.4 MW	17.1 MW	4.8 MW

97 cable outage conditions:
(Load flow #CV-25)

Open Switch #9786 at Elm Rd
Open Switch #9757 at W. Chop
Open #9722 Breaker at Vineyard Haven
Close T1-91-97 Switch at Vineyard Haven
Close T1-97-99 at Doger's Hole
Recloser T1-99-224 open (#75 cable feeds Oak Bluffs #124 Circuit)
5.4 MW Generation at West Tisbury
5.0 MW Generation at Oak Bluffs

Cable Loadings at 46 MW peak:

#99	17.0 +j 1.4	Ratings 17 / 22.5 MVA
#91	16.5 -j 1.2	Ratings 17 / 18.4 MVA
#75	2.4 +j 0.2	Rating 8.5 MVA

Generation Schedule For Daily Load Cycle:

DISPATCH GUIDE:

These generation dispatches attempt to keep the #91 and #99 cable flows at or Near 17 MVA normal ratings.

M.V. Load Level	Oak Bluffs Gen.	W. Tisbury Gen.	#91 Load	#99 Load	#75 Load
32 MW	0	0	12.8 MW	17.8 MW	3.3 MW
33 MW	1.0 MW	0	13.2 MW	17.2 MW	3.4 MW
34 MW	1.0 MW	0	13.6 MW	17.7 MW	3.5 MW
35 MW	2.0 MW	0	14.0 MW	17.3 MW	3.6 MW
36 MW	3.0 MW	0	14.4 MW	16.9 MW	3.7 MW
37 MW	3.5 MW	0	14.8 MW	16.9 MW	3.8 MW
38 MW	4.0 MW	0	15.3 MW	16.9 MW	4.0 MW
39 MW	4.5 MW	0	15.7 MW	16.8 MW	4.1 MW
40 MW	5.0 MW	0	16.1 MW	17.0 MW	4.2 MW
41 MW	5.5 MW	0	16.5 MW	17.0 MW	4.3 MW
42 MW	6.0 MW	0	17.0 MW	17.0 MW	4.4 MW
43 MW	6.5 MW	0	17.4 MW	16.9 MW	4.5 MW
44 MW	7.0 MW	1.0 MW	16.7 MW	16.9 MW	4.6 MW
45 MW	7.5 MW	1.0 MW	17.1 MW	17.1 MW	4.7 MW
46 MW	8.0 MW (max)	2.0 MW	16.4 MW	17.1 MW	4.8 MW

99 cable outage conditions: **(Load flow #CV-26)**	Open #9932 Circuit Breaker at Falmouth Open Switch #9945 at Oak Bluffs Open Switch #9704 at Vineyard Haven Close T1-91-97 Switch at Vineyard Haven Close T1-91-97 at Doger's Hole Recloser T1-99-224 open (#75 cable feeds Oak Bluffs #124 Circuit) 5.4 MW Generation at West Tisbury 8.1 MW Generation at Oak Bluffs
Cable Loadings at 46 MW peak:	#91 18.0 +j 0.0 Ratings 17 / 18.4 MVA #97 12.8 +j 3.1 Ratings 17 / 18.4 MVA #75 2.4 +j 0.2 Rating 8.5 MVA

75 cable outage conditions: **(Load flow #CV-27)**	Close Recloser T1-99-224 Open Recloser 7532 at Falmouth Substation Open Recloser 224-2 at Oak Bluffs Open Disconnect Switch 7546 at Oak Bluffs 0.0 MW Generation at West Tisbury 0.0 MW Generation at Oak Bluffs
Cable Loadings at 46 MW peak:	#91 14.1 -j 0.7 Ratings 17 / 18.4 MVA #97 17.7 +j 2.7 Ratings 17 / 18.4 MVA #99 15.1 +j 2.4 Rating 17 / 22.5 MVA

No Martha's Vineyard generation dispatch required.

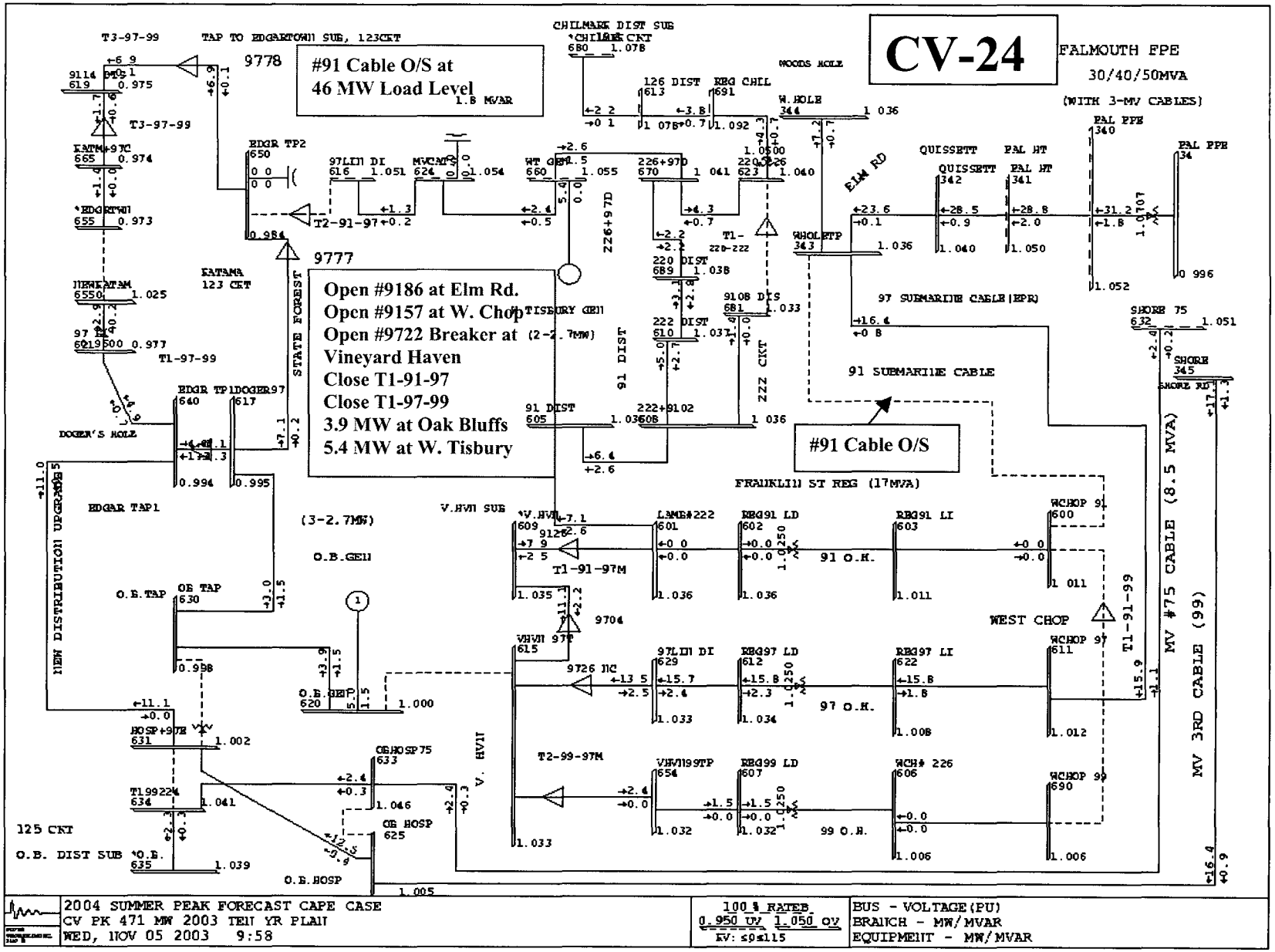
CV-24
FALMOUTH FPE
30/40/50MVA
(WITH 3-MV CABLES)
#91 Cable O/S at
46 MW Load Level
Open #9186 at Elm Rd.
Open #9157 at W. Chop
Open #9722 Breaker at
Vineyard Haven
Close T1-91-97
Close T1-97-99
3.9 MW at Oak Bluffs
5.4 MW at W. Tisbury
#91 Cable O/S
TAP TO EDGARTOWN SUB, 123CKT
CHILMARK DIST SUB
WOODS HOLE
ELM RD
97 SUBMARINE CABLE (EPR)
91 SUBMARINE CABLE
FRANKLIN ST REG (17MVA)
STATE FOREST
NEW DISTRIBUTION UPGRADE
EDGAR TAP1
O.B. GEN
V. HVN SUB
WEST CHOP
MV #75 CABLE (8.5 MVA)
MV 3RD CABLE (99)
125 CKT
O.B. DIST SUB
2004 SUMMER PEAK FORECAST CAPE CASE
CV PK 471 MW 2003 TEN YR PLAN
WED, NOV 05 2003 9:58
100 % RATEB
0.950 UV 1.050 OV
BUS - VOLTAGE (PU)
BRANCH - MW/MVAR
EQUIPMENT - MW/MVAR

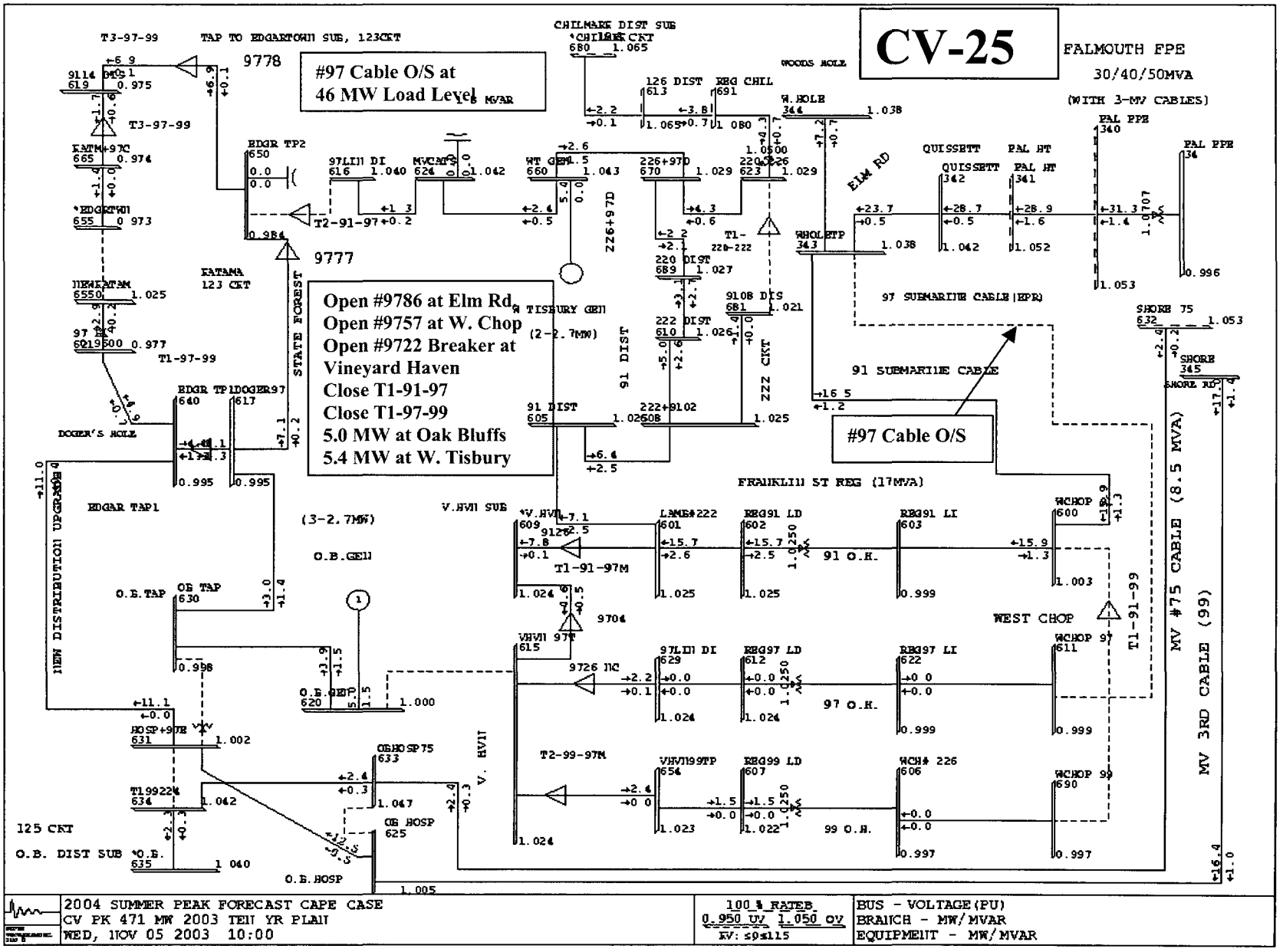
CV-25
FALMOUTH FPE
30/40/50MVA
(WITH 3-MV CABLES)
#97 Cable O/S at
46 MW Load Level
Open #9786 at Elm Rd
Open #9757 at W. Chop
Open #9722 Breaker at
Vineyard Haven
Close T1-91-97
Close T1-97-99
5.0 MW at Oak Bluffs
5.4 MW at W. Tisbury
#97 Cable O/S
TAP TO EDGARTOWN SUB, 123CKT
CHILMARK DIST SUB
WOODS HOLE
ELM RD
QUISSETT
PAL HT
PAL PPE
97 SUBMARINE CABLE (EPR)
91 SUBMARINE CABLE
STATE FOREST
W TISBURY GEN
(2-2.7MW)
91 DIST
ZZZ CKT
FRANKLIN ST REG (17MVA)
EDGAR TAP1
(3-2.7MW)
O.B.GEN
V.HVN SUB
91 O.H.
97 O.H.
99 O.H.
WEST CHOP
MV #75 CABLE (8.5 MVA)
MV 3RD CABLE (99)
NEW DISTRIBUTION UPGRADE
125 CKT
O.B. DIST SUB
O.B. HOSP
2004 SUMMER PEAK FORECAST CAPE CASE
CV PK 471 MW 2003 TEN YR PLAN
WED, NOV 05 2003 10:00
100 % RATEB
0.950 UV 1.050 OV
BUS - VOLTAGE (PU)
BRANCH - MW/MVAR
EQUIPMENT - MW/MVAR

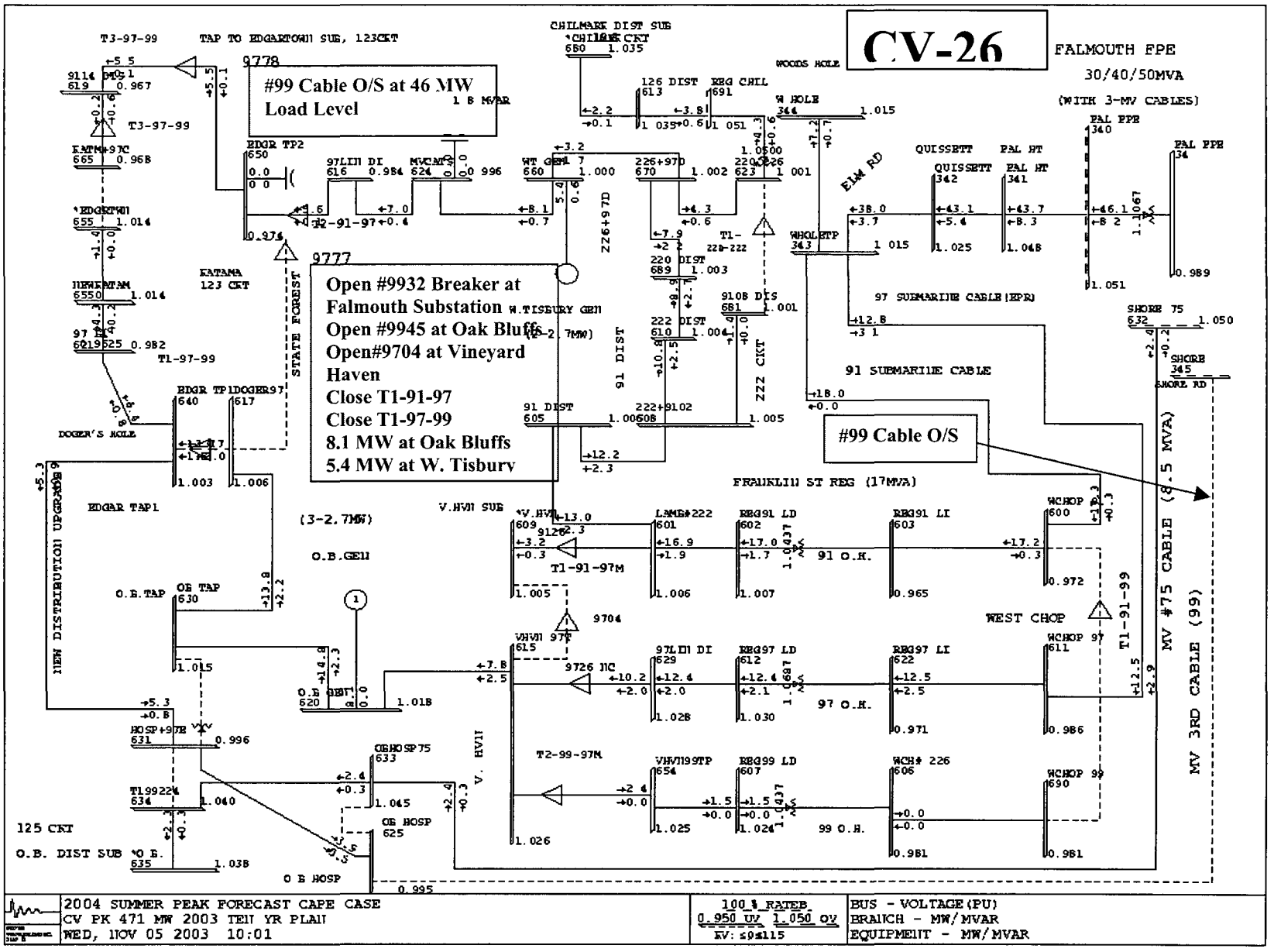
CV-26
FALMOUTH FPE
30/40/50MVA
(WITH 3-MV CABLES)
#99 Cable O/S at 46 MW
Load Level
Open #9932 Breaker at
Falmouth Substation
Open #9945 at Oak Bluffs
Open#9704 at Vineyard
Haven
Close T1-91-97
Close T1-97-99
8.1 MW at Oak Bluffs
5.4 MW at W. Tisbury
#99 Cable O/S
MV #75 CABLE (8.5 MVA)
MV 3RD CABLE (99)
2004 SUMMER PEAK FORECAST CAPE CASE
CV PK 471 MW 2003 TEN YR PLAN
WED, NOV 05 2003 10:01
100 % RATEB
0.950 UV 1.050 OV
BUS - VOLTAGE(PU)
BRANCH - MW/MVAR
EQUIPMENT - MW/MVAR

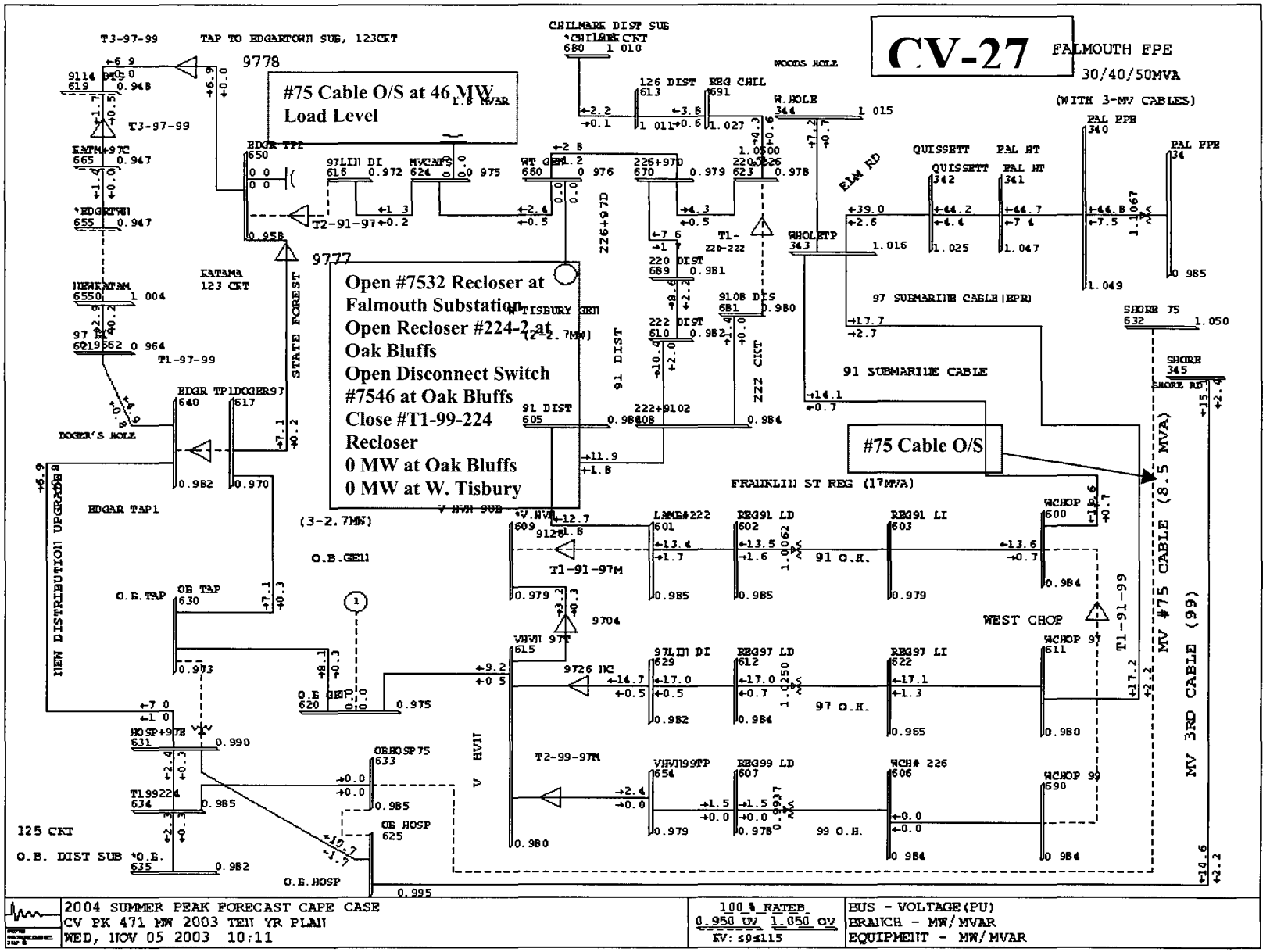
CV-27
FALMOUTH FPE
30/40/50MVA
(WITH 3-MV CABLES)
#75 Cable O/S at 46 MW
Load Level
Open #7532 Recloser at
Falmouth Substation
Open Recloser #224-2 at
Oak Bluffs
Open Disconnect Switch
#7546 at Oak Bluffs
Close #T1-99-224
Recloser
0 MW at Oak Bluffs
0 MW at W. Tisbury
#75 Cable O/S
TAP TO EDGARTOWN SUB, 123CKT
CHILMARK DIST SUB
WOODS HOLE
KATAMA
123 CKT
STATE FOREST
DOGER'S HOLE
EDGAR TAP1
NEW DISTRIBUTION UPGRADE
O.B.GEN
O.B.TAP
125 CKT
O.B. DIST SUB
O.B.HOSP
91 DIST
222 CKT
91 SUBMARINE CABLE
97 SUBMARINE CABLE (EPR)
FRANKLIN ST REG (17MVA)
91 O.H.
97 O.H.
99 O.H.
WEST CHOP
MV #75 CABLE (8.5 MVA)
MV 3RD CABLE (99)
2004 SUMMER PEAK FORECAST CAPE CASE
CV PK 471 MW 2003 TEN YR PLAN
WED, NOV 05 2003 10:11
100 % RATEB
0.950 UV 1.050 OV
KV: ≤0≤115
BUS - VOLTAGE (PU)
BRANCH - MW/MVAR
EQUIPMENT - MW/MVAR

NSTAR
ELECTRIC
GAS

2nd Contingency Switching Analysis for Martha's Vineyard #91 Cable Outage

Steady-State Loadflow Analysis and Switching Sequences

2 July 2003

2003 SWITCHING STUDY

M.V. ISLAND (Cape & Vineyard District)

CONTINGENCY SWITCHING PLANS WITH #91 CABLE O/S

MARTHA'S VINEYARD 2003 FORECAST PEAK LOAD: 43 MW

BASE CASE CONDITIONS WITH #91 CABLE OUT OF SERVICE

91 cable outage conditions:
(Load flow #1)

Open Switch #9186 at Elm Rd
Open #9722 Breaker at Vineyard Haven
Close T1-91-97 Switch at Vineyard Haven
Close T1-97-99 at Doger's Hole
Recloser T1-99-224 open (#75 cable feeds Oak Bluffs #124 Circuit)
0.0 MW Generation at West Tisbury
6.5 MW Generation at Oak Bluffs

Cable Loadings at 43 MW peak:

#99	16.9 +j 1.7	Ratings 17 / 22.5 MVA
#97	17.4 -j 0.2	Ratings 17 / 18.4 MVA
#75	4.5 +j 0.1	Rating 8.5 MVA

Generation Schedule For Daily Load Cycle:

DISPATCH GUIDE:

These generation dispatches attempt to keep the #97 and #99 cable flows at or Near 17 MVA normal ratings.

M.V. Load Level	Oak Bluffs Gen.	W. Tisbury Gen.	#97 Load	#99 Load	#75 Load
32 MW	0	0	12.8 MW	17.8 MW	3.3 MW
33 MW	1.0 MW	0	13.2 MW	17.2 MW	3.4 MW
34 MW	1.0 MW	0	13.6 MW	17.7 MW	3.5 MW
35 MW	2.0 MW	0	14.0 MW	17.3 MW	3.6 MW
36 MW	3.0 MW	0	14.4 MW	16.9 MW	3.7 MW
37 MW	3.5 MW	0	14.8 MW	16.9 MW	3.8 MW
38 MW	4.0 MW	0	15.3 MW	16.9 MW	4.0 MW
39 MW	4.5 MW	0	15.7 MW	16.8 MW	4.1 MW
40 MW	5.0 MW	0	16.1 MW	17.0 MW	4.2 MW
41 MW	5.5 MW	0	16.5 MW	17.0 MW	4.3 MW
42 MW	6.0 MW	0	17.0 MW	17.0 MW	4.4 MW
43 MW	6.5 MW	0	17.4 MW	16.9 MW	4.5 MW
44 MW	7.0 MW	1.0 MW	16.7 MW	16.9 MW	4.6 MW
45 MW	7.5 MW	1.0 MW	17.1 MW	17.1 MW	4.7 MW
46 MW	8.0 MW (max)	2.0 MW	16.4 MW	17.1 MW	4.8 MW

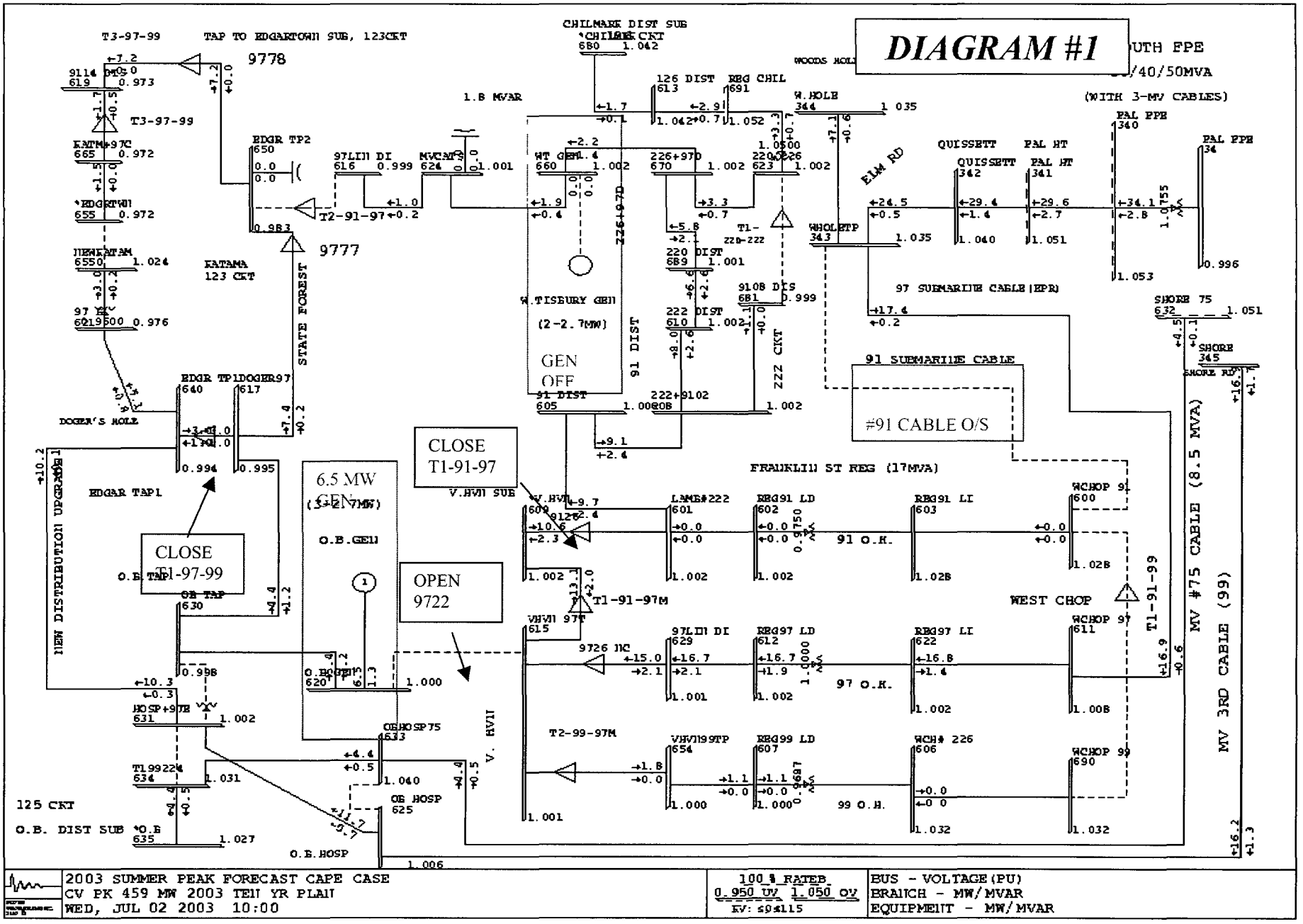
DIAGRAM #1
CHILMARK DIST SUB
TAP TO EDGARTOWN SUB, 123CKT
9778
9777
KATAMA 123 CKT
STATE FOREST
1.8 MVAR
W.TISBURY GEN (2-2.7MW)
GEN OFF
91 DIST
ZZZ CKT
91 SUBMARINE CABLE
#91 CABLE O/S
FRANKLIN ST REG (17MVA)
CLOSE T1-91-97
CLOSE T1-97-99
6.5 MW GEN
O.B.GEN
OPEN 9722
NEW DISTRIBUTION UPGRADE
EDGAR TAP1
125 CKT
O.B. DIST SUB
O.B. HOSP
V.HVN SUB
91 O.H.
97 O.H.
99 O.H.
WEST CHOP
MV #75 CABLE (8.5 MVA)
MV 3RD CABLE (99)
97 SUBMARINE CABLE (EPR)
(WITH 3-MV CABLES)
2003 SUMMER PEAK FORECAST CAPE CASE
CV PK 459 MW 2003 TEN YR PLAN
WED, JUL 02 2003 10:00
100 % RATED
0.950 UV 1.050 OV
BUS - VOLTAGE (PU)
BRANCH - MW/MVAR
EQUIPMENT - MW/MVAR

Martha's Vineyard Cable Data, Vintage, Length, Conductor Type, and Status

Updated 2/19/03 KLJ

Cable #	Rating (MVA)	Size (kcmil)	Voltage (kV)*	Install Date	Insulation	Circuit #	Location	Distance (mi.) #	Retire Date	Comments
#1	5	#2 Cu 3/c	25	1940	PILC	99	Falmouth to West Chop	6.4	1986	**Retired** when Cable #4 put into service
#2	10	#2/0 Cu 3-1/c	25	1954	PILC	97 / 91	Elm Road to West Chop	4.98	1986	**Retired** when Cable #4 put into service; renur
#3	17	350 kcmil Cu	35	1983	PILC	97	Elm Road to West Chop	4.9 ?	1990	**Retired** when Cable #5 put into service
#4	18.2	250 kmcil Cu	35	1986	PILC	91	Elm Road to West Chop	4.675	In-Service	**Replaced** Cable #1 and Cable #2 in 1986
#5	20	350 kcmil Cu	35	1990	EPR	97	Elm Road to West Chop	4.96	In-Service	**Replaced** Cable #3 due to splice failures
#6	8.5	350 kcmil 3-1/C +750 kcmil 3-1/C	35	1995 / 2002 ^	EPR	75	Falmouth to Oak Bluffs	6.5	In-Service	**In-Service**, new land portion installed Falmou
#7	22.8	500 kcmil 3-1/C +750 kcmil 3-1/C	35	1996	EPR	99	Falmouth to Oak Bluffs	6.5	In-Service	**In-Service**, originally replaced cable #6, whicl

*This is design voltage for the cable. All cables operated at 23kV

^ Submarine portion installed 1995, failed and derated shortly after installation. Land portion installed Summer 2002

75 Cable: Submarine portion is 350 kcmil, land portion is 750 kcmil
99 Cable: Sumarine portion is 500 kcmil, land portion is 750 kcmil

Mileage: Only Submarine portions are shown; cables 75 and 99 have land portions back to Falmouth Substation.

Note: "Retired" cables may have been abandoned in-place, or may have had substantial portions removed

SWITCHING SEQUENCES FOR 2ND CONTINGENCY CABLE OUTAGES

#91 cable O/S, with subsequent outage of #97 Cable or #97 OH line:

Switching Sequence Assumes Switching Plan for #91 cable outage, listed above, is the starting condition.

Switching for loss of #97 Cable:
(Load Flow #2)

Open Switch #9786 at Elm Rd
Open Switch #9757 at West Chop
Close #9722 Breaker at Vineyard Haven
5.4 MW Generation at West Tisbury
8.1 MW Generation at Oak Bluffs

Shed 226 circuit load by opening recloser on South Road (Chilmark)

Shed 228 circuit load by opening recloser #228-2 (Vineyard Haven)

Max. Vineyard load = 38.7 MW

Cable Loadings post-switching:

#99	21.9 +j 0.5	Ratings 17 / 22.5 MVA
#97	0	Ratings 17 / 18.4 MVA
#75	4.5 +j 0.1	Rating 8.5 MVA

West Tisbury and Oak Bluffs dispatch varied to keep #99 cable flow below 22.5 MVA LTE limit.

If load is not shed before prior to performance of the switching, the #99 cable will be overloaded at 28 MVA (124% of 22.5 MVA LTE).

#91 cable O/S, with subsequent outage of #99 Cable:

Switching Sequence Assumes Switching Plan for #91 cable outage, listed above, is the starting condition.

Switching for loss of #99 Cable: (Load Flow #3)	Open Breaker #9932 at Falmouth Sub. Open Switch #9945 at Oak Bluffs Close #9722 Breaker at Vineyard Haven
Transfer #221 Ckt to #75 cable:	Close T1-221-224 at M. V. Hospital Open 221 Circuit Recloser at Oak Bluffs
	5.4 MW Generation at West Tisbury 8.1 MW Generation at Oak Bluffs
	Shed 226 circuit load by opening recloser on South Road (Chilmark)
	Shed 228 circuit load by opening recloser #228-2 (Vineyard Haven)
	Max. Vineyard load = 39.0 MW

Cable Loadings post-switching:	#99	0	Ratings 17 / 22.5 MVA
	#97	17.0 +j0.4	Ratings 17 / 18.4 MVA
	#75	9.1 +j 0.8	Rating 8.5 MVA

#99 cable 7% over 8.5 MVA derated rating in this scenario. Some of the #124 circuit may have to be shed while Martha's Vineyard Hospital is served from the #75 cable.

Small portions of the #226 or #228 circuits could be restored up to the 18.4 MVA LTE rating of cable #97.

#91 cable O/S, with subsequent outage of #75 Cable:

Switching Sequence Assumes Switching Plan for #91 cable outage, listed above, is the starting condition.

Switching for loss of #75 Cable: (Load Flow #4)	Open Recloser #7532 at Falmouth Sub. Open Disc. Switch #7546 Oak Bluffs Close #9722 Breaker at Vineyard Haven
Transfer #124 Ckt to #99 cable:	Close T1-99-224 at Oak Bluffs
	0.0 MW Generation at West Tisbury 8.1 MW Generation at Oak Bluffs
	Max. Vineyard load = 43.0 MW
	No Load Shedding Required

Cable Loadings post-switching:	#99	20.0 +j1.5	Ratings 17 / 22.5 MVA
	#97	17.4 –j0.1	Ratings 17 / 18.4 MVA
	#75	0	Rating 8.5 MVA

No load shedding required. Dispatch Oak Bluffs output to keep #99 cable below 22.5 MVA LTE rating.

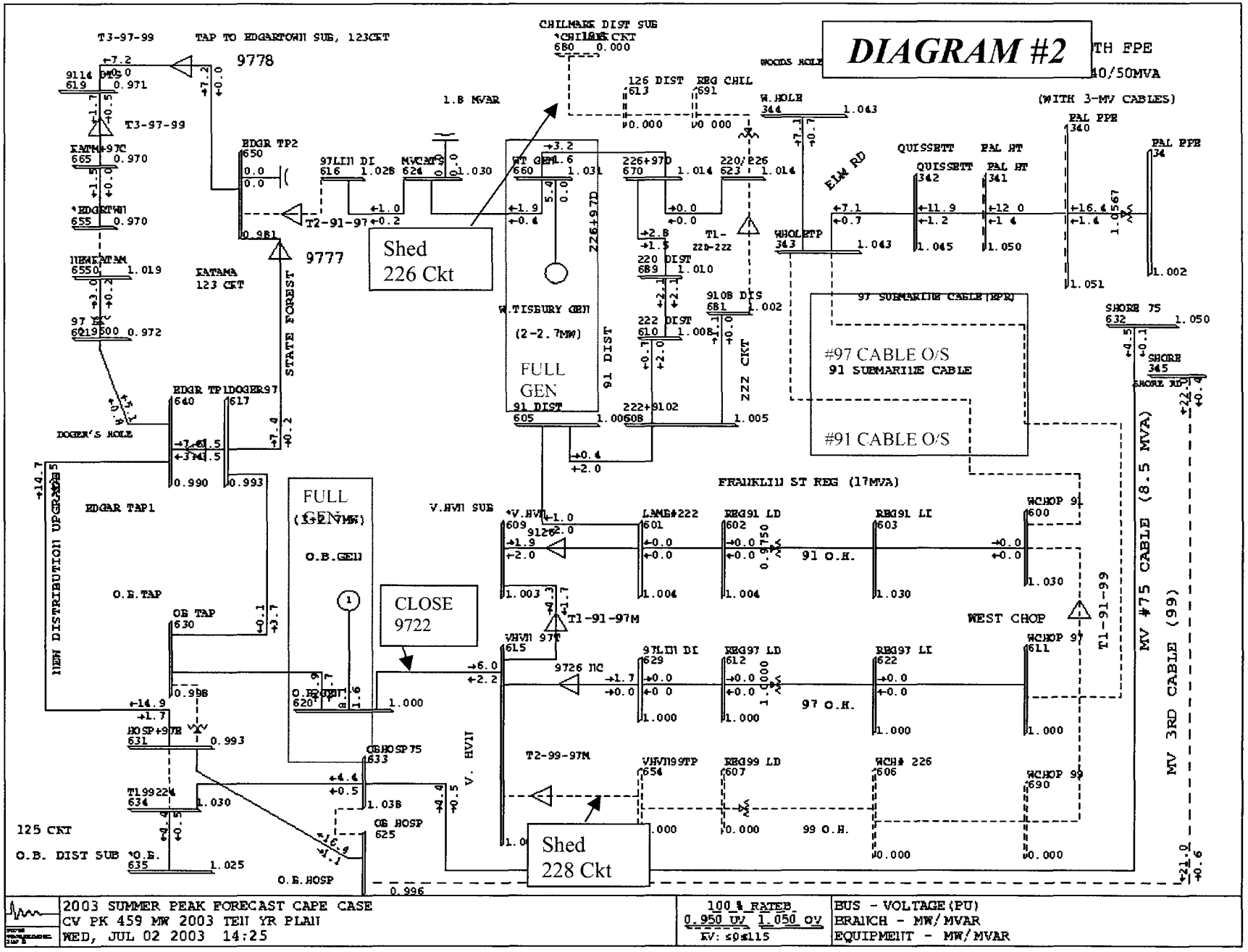
DIAGRAM #2
Shed 226 Ckt
Shed 228 Ckt
CLOSE 9722
FULL GEN
#97 CABLE O/S
91 SUBMARINE CABLE
#91 CABLE O/S
MV #75 CABLE (8.5 MVA)
MV 3RD CABLE (99)
2003 SUMMER PEAK FORECAST CAPE CASE
CV PK 459 MW 2003 TEN YR PLAN
WED, JUL 02 2003 14:25
100 % RATEB
0.950 UV 1.050 OV
KV: ≤9≤115
BUS - VOLTAGE(PU)
BRANCH - MW/MVAR
EQUIPMENT - MW/MVAR

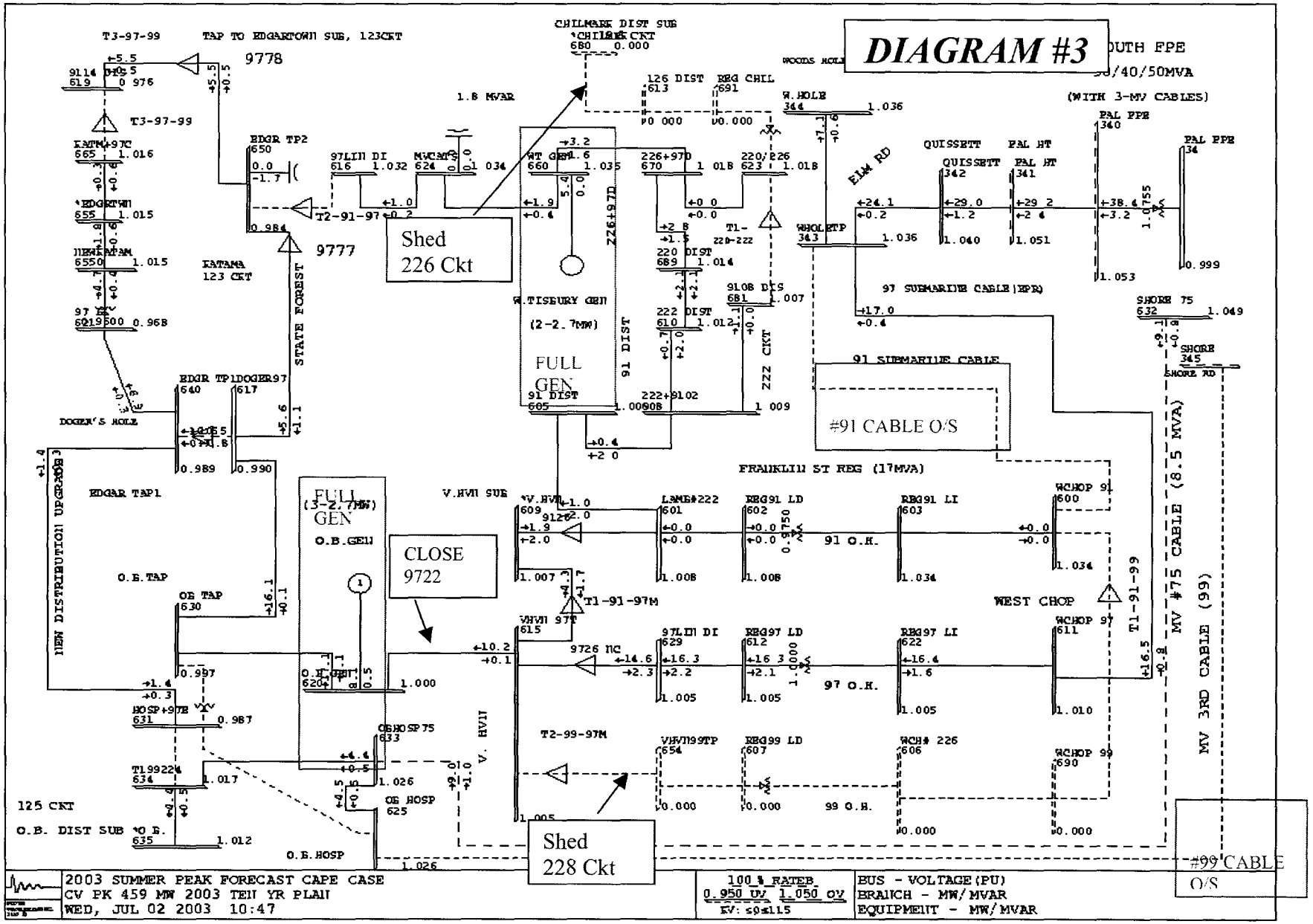
DIAGRAM #3
Shed 226 Ckt
CLOSE 9722
Shed 228 Ckt
FULL GEN
#91 CABLE O/S
#99 CABLE O/S
2003 SUMMER PEAK FORECAST CAPE CASE
CV PK 459 MW 2003 TEN YR PLAN
WED, JUL 02 2003 10:47
BUS - VOLTAGE(PU)
BRANCH - MW/MVAR
EQUIPMENT - MW/MVAR

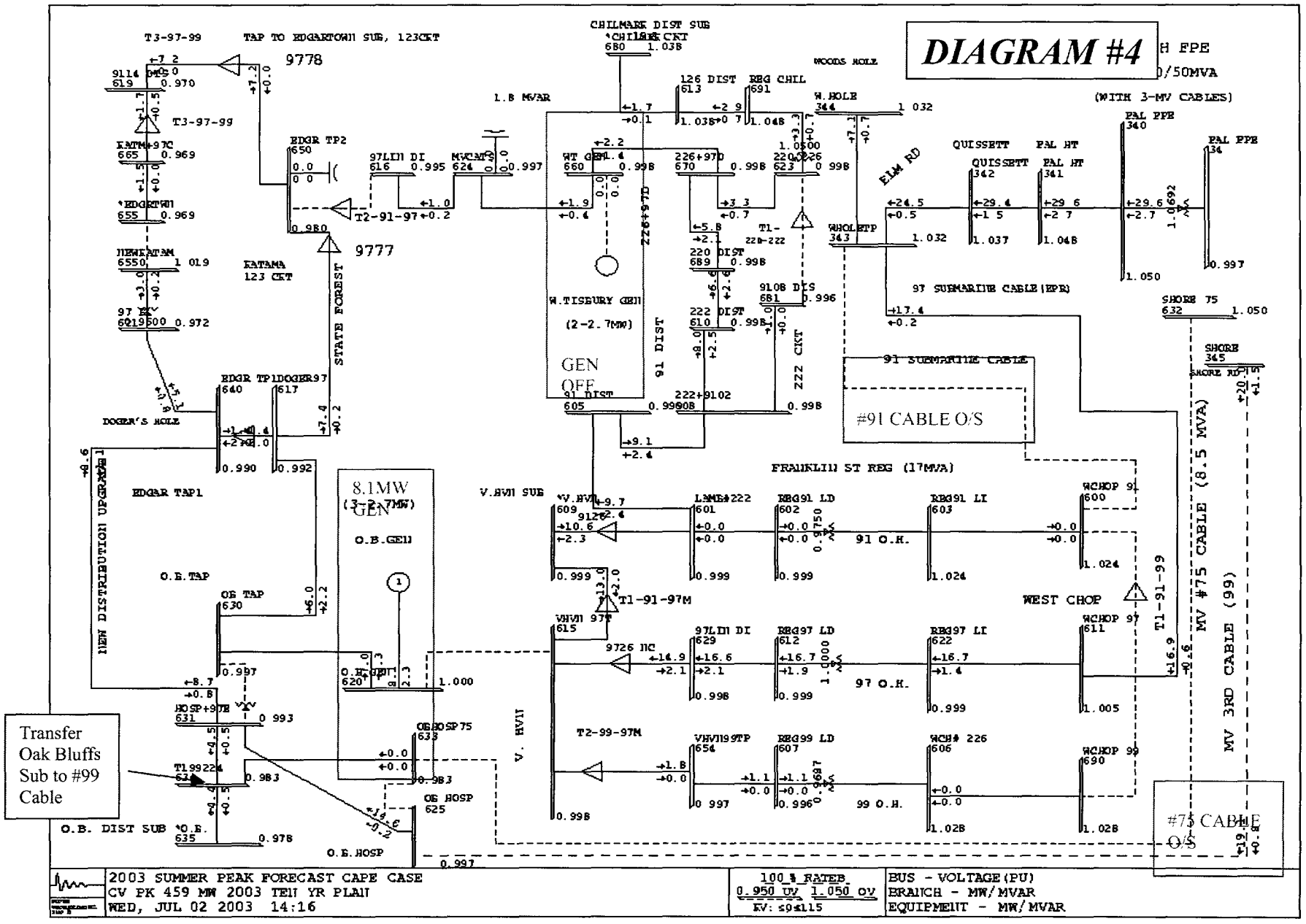
DIAGRAM #4
Transfer Oak Bluffs Sub to #99 Cable
#91 CABLE O/S
#75 CABLE O/S
GEN OFF
8.1MW GEN
2003 SUMMER PEAK FORECAST CAPE CASE
CV PK 459 MW 2003 TEN YR PLAN
WED, JUL 02 2003 14:16
100 % RATEB
0.950 UV 1.050 OV
BUS - VOLTAGE (PU)
BRANCH - MW/MVAR
EQUIPMENT - MW/MVAR

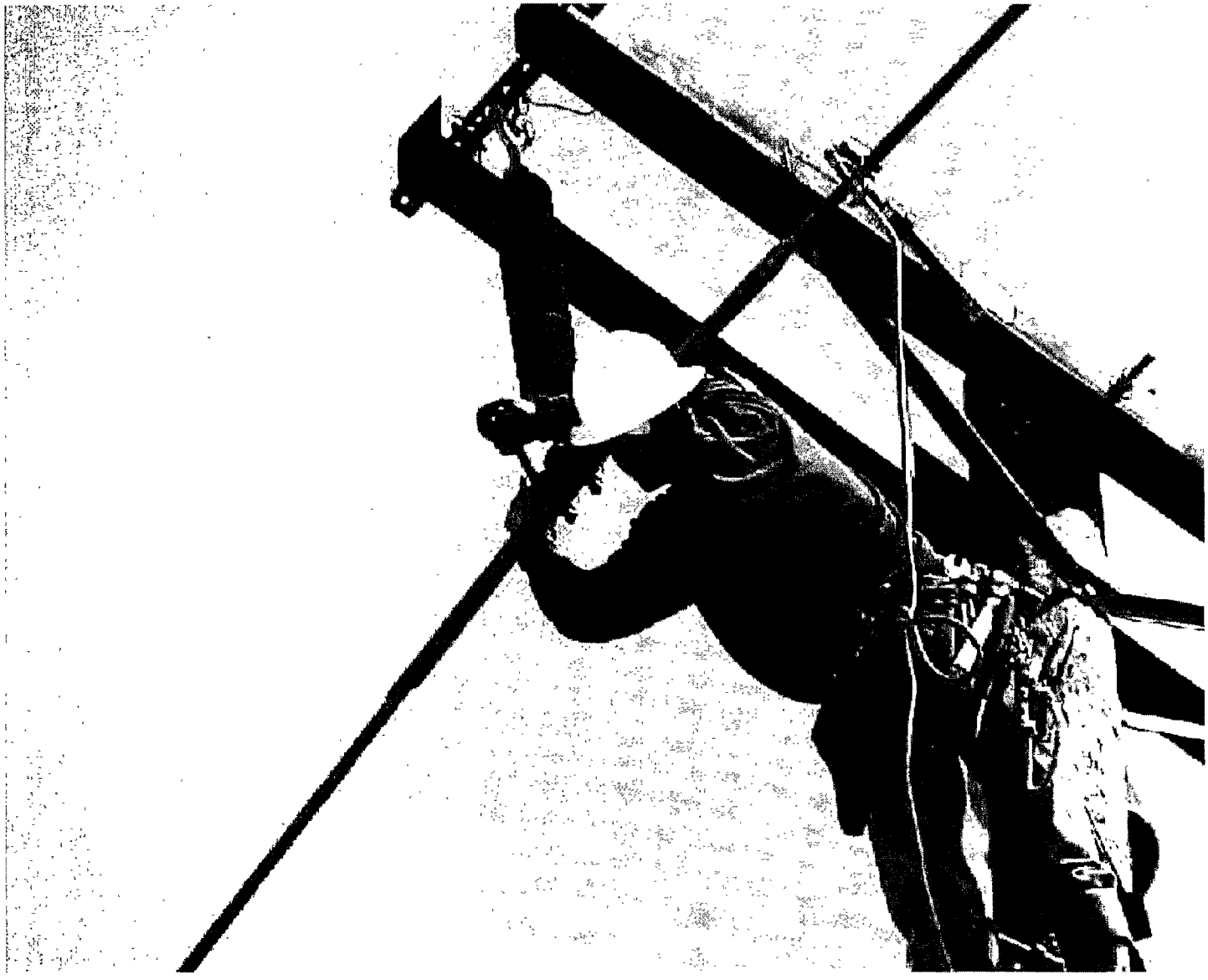

345/115kV Transmission System

Bulk Transmission Facility Outages

Thermal Results and Remedial Switching Action

2004 T&D OPERATING STUDY

345 & 115kV Transmission Facilities

#107 115KV LINE (BOURNE-OTIS.-FALMOUTH TAP) OUTAGE CONTINGENCY*

#107 2338 ACAR 115KV OVERHEAD TRANSMISSION LINE

* 1590 ACSR from Otis to Falmouth Tap.
* 4/0 ACSR from Falmouth Tap to Falmouth on 107W portion.

Overload Ratings:

Summer Normal	345 MVA
Summer Emergency	388 MVA
Winter Normal	345 MVA
Winter Emergency	383 MVA

Limiting element is a bushing CT at Bourne

Action Required:

1. Isolate #107 115kV line, Bourne-Otis-Falmouth Tap-Falmouth:

   Open: #10772 Circuit Breaker at Bourne S/S
   #10753 Circuit Switcher at Otis
   #11522 Circuit Breaker at Falmouth Tap
   #10793 Circuit Switcher at Falmouth

   Close: Nothing

   Transformers banks at Otis and Falmouth 107W will be out-of-service.

2. Restore 107W if not faulted section:

   Open: #10726 Switch at Falmouth Tap

   Close: #11522 Breaker at Falmouth Tap
   #10793 Circuit Switcher at Falmouth

   Restores Falmouth 107W Transformer to service.

3. Restore #107 Otis-Falmouth Tap if not faulted section:

   Open: #10756 Switch at Otis

   Close: #10726 Switch at Falmouth Tap

#10753 Circuit Switcher at Otis

Restores Otis Transformer to service. This results in worst-case loadflow condition, **diagram T-1.**

Close all 4.8 MVAR capacitor banks in at Otis, Falmouth 107W, Falmouth 107E, Hatchville, and Mashpee. Close in 40 MVAR capacitor bank at Hyannis.

Dispatch Martha's Vineyard generation at Oak Bluffs and W. Tisbury to 10 MVA firm output to reduce loading on the #115 line out of Barnstable.

Results:

For #107 Bourne-Otis section O/S, low transmission system voltages (> 0.95 per unit) from Mashpee to Otis. Low 23kV bus voltage of 0.99 per unit at Otis Substation #915 will result in very low 23kV primary voltages on #79, #81, and #86 DSS circuits. Load transfers to Sandwich and Hatchville may be required.

Violations:

Overloads	-	None
Voltage	-	Unacceptably low transmission voltages on #115 and #107 lines at Mashpee, Hatchville, Falmout Tap, Falmouth, Otis. Unacceptably low distribution voltages Otis 23kV bus and DSS circuits.

Additional Actions Required / Recommendations:

Installation of further reactive compensation at Hyannis and Falmouth Tap would be recommended as a future transmission project.

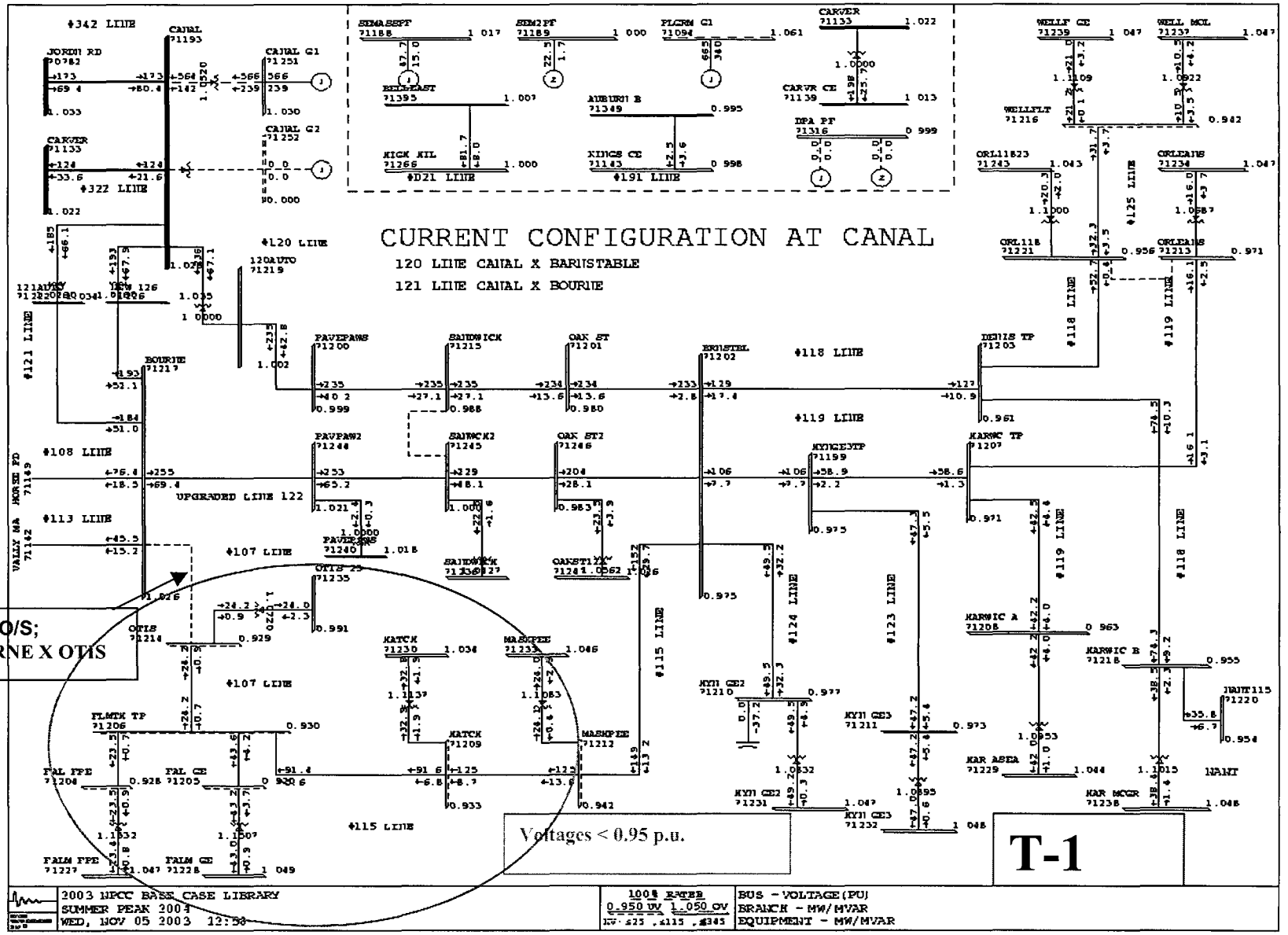
CURRENT CONFIGURATION AT CANAL
120 LINE CANAL X BARNSTABLE
121 LINE CANAL X BOURNE
#107 O/S;
BOURNE X OTIS
Voltages < 0.95 p.u.
T-1
2003 NPCC BASE CASE LIBRARY
SUMMER PEAK 2004
WED, NOV 05 2003 12:58
100% RATED
0.950 UV 1.050 OV
BUS - VOLTAGE(PU)
BRANCH - MW/MVAR
EQUIPMENT - MW/MVAR

2004 T&D OPERATING STUDY

345 & 115kV Transmission Facilities

#108 115KV LINE (BOURNE-HORSE POND TAP-WAREHAM-TREMONT-MANOMET) OUTAGE CONTINGENCY

#108 795 ACSR 115KV OVERHEAD TRANSMISSION LINE

Overload Ratings:

Summer Normal	227 MVA
Summer Emergency	246 MVA
Winter Normal	269 MVA
Winter Emergency	297 MVA

Summer Limit is line conductor.
Winter Limit is wave trap at Bourne.
Section from Horse Pond Tap to Long Pond Road is double-circuit with 23kV underbuild.

Action Required:

1. Isolate #108 115kV line, Bourne-Horsepond Tap-Valley-Wareham-Tremont, Horsepond Tap-Manomet):

   Open: #10872 Circuit Breaker at Bourne S/S.
   #10832 Circuit Breaker at Tremont
   #10812 Circuit Switcher at Manomet
   #10842 Circuit Switcher at Wareham
   #10852 (new) Circuit Switcher at Valley

   Close: Nothing

   Causes transformer outages at Wareham, Manomet and Valley.

2. Restore Horse Pond Tap x Manomet if not faulted section by transferring to #113 line:

   Open: #10867 Switch at Horse Pond Tap

   Close: #11367 Switch at Horse Pond Tap
   #10812 Circuit Switcher at Manomet

   This restores the Manomet Transformer.

3. Faulted section is Bourne x Tremont, restore load at Valley and Wareham to the #113 line:

Open: #10847 Switch at Wareham
#10856 and #10859 Switches at Valley (new for double-ended unit).

Close: #11347 Switch at Wareham
#10842 Circuit Switcher at Wareham
Close 23kV bus tie breaker at Valley (new for double-ended station)

This restores Wareham transformer, and Valley load to the #113 bank.

Results:

No thermal or voltage violations, see **Diagram T-2**.

Violations:

Overloads - None

Voltage - None

Additional Actions Required / Recommendations:

None.

P

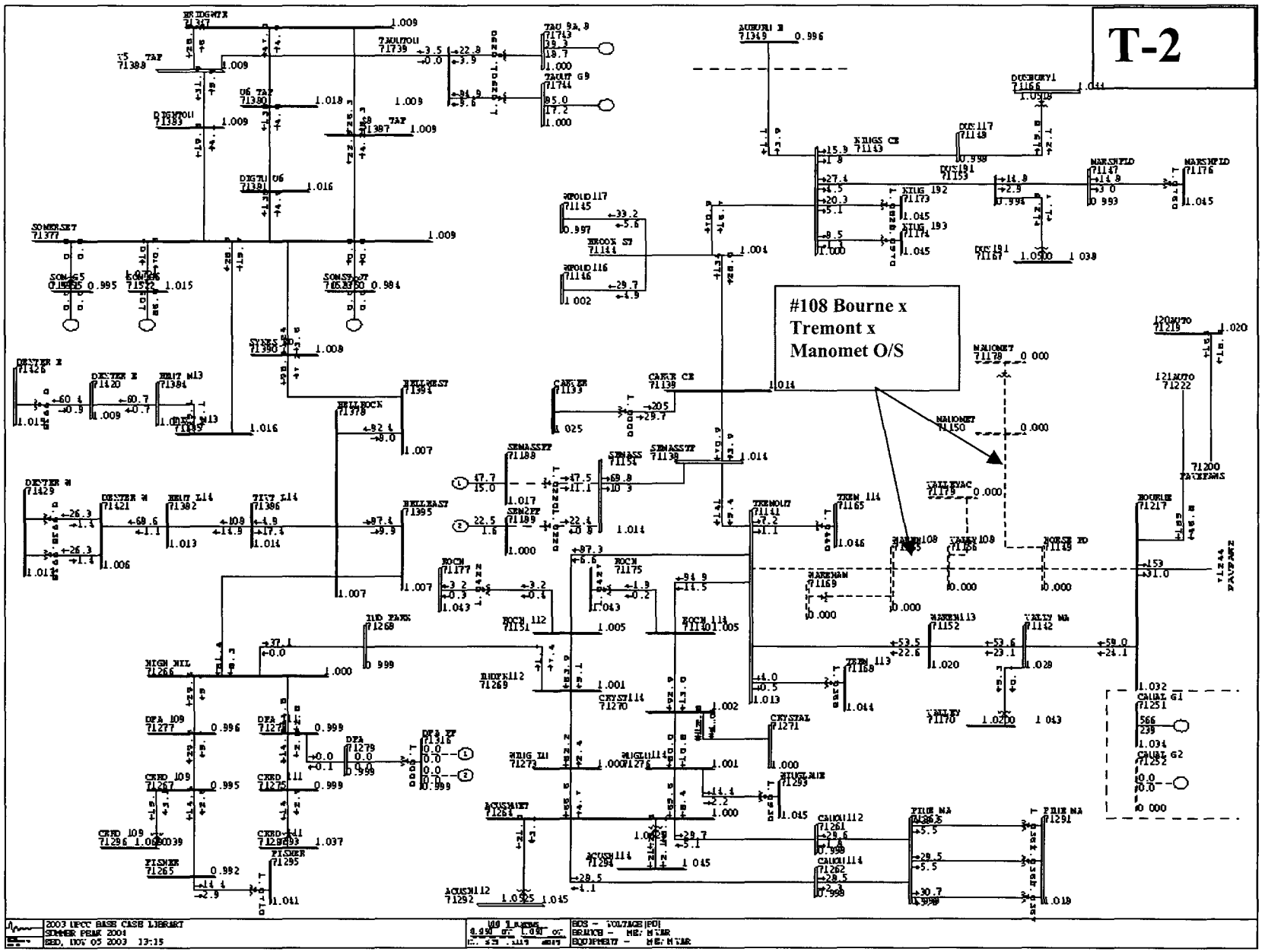
T-2
#108 Bourne x
Tremont x
Manomet O/S
2003 NPCC BASE CASE LIBRARY
SUMMER PEAK 2004

2004 T&D OPERATING STUDY

345 & 115kV Transmission Facilities

#109 115KV LINE (HIGH HILL-CROSS RD.-FISHER RD.) OUTAGE CONTINGENCY

#109 4/0 ACSR 115KV OVERHEAD TRANSMISSION LINE

Overload Ratings:

Summer Normal	96 MVA
Summer Emergency	104 MVA
Winter Normal	119 MVA
Winter Emergency	125 MVA

Action Required:

1. **Isolate #109 115kV line, High Hill-Cross Road-Fisher Road:**

   Open: #D2142 Circuit Breaker at High Hill Switching Station
   #11142 Circuit Breaker at Hill Switching Station
   #10912 Circuit Switcher at Cross Road
   #10972 Circuit Switcher at Fisher Road
   #10982 Circuit Switcher at Fisher Road.

   Close: Nothing

   Three transformers out of service (two at Fisher Road, one at Cross Road)

2. **Restore #109 Cross Road – Fisher Road if not faulted section:**

   Open: #10957 Switch at Cross Road

   Close: T1-109-111 Switch at Cross Road (disable mechanically & electrically)
   #10972 and #10982 Circuit Switchers at Fisher Rd. (restores transformers).

   Cross Road #109 transformer cannot be restored due to inadequate sectionalizing switch arrangement at Cross Road. Transfer load to Cross Road #111 bank via the following switching:

   Open: #54112 13.2kV Circuit Breaker at Cross Road.

   Close: T1-107-541 13.2kV tie switch (ROW)
   13.2kV Bus tie breaker #T1-12 at Cross Road.

Cross Road #111 Transformer Loading will be 23.3 MW +j5.8 MVAR (24 MVA), 20% over 20 MVA limit on this transformer due its temporary secondary connection (see *Cross Road Substation #651* under *New Bedford District).*

3. **<u>If #109 High Hill to Cross Road is faulted section, or if isolation of fault location to either section of the #109 line cannot be accomplished:</u>**

TRANSFER CROSS ROAD LOAD TO INDUSTRIAL PARK

Open: #54112 Circuit Breaker at Cross Road.

Close: T1-107-541 13.2kV tie switch (to Industrial Park)

TRANSFER CROSS ROAD LOAD TO PINE STREET VIA HAWTHORNE AND ROCKDALE:

Open: 503-19 Recloser Corner State Road and Tucker Road
502-51 Recloser at Hawthorne Substation

Close: T1-506-503 13.2kV tie switch (Corner Allen Street and Slocum Road)
T1-501-502 (State Road and Slocum Road)

CLOSE CROSS ROAD BUS TIE BREAKER

Close: Bus tie breaker #T1-12 at Cross Road.

TRANSFER FISHER ROAD LOAD TO PINE STREET VIA BOLTON

Open: Switch 524-23 (Corner of Fisher Road at Russells Mills Road)
Switch 524-7 (Corner Russells Mills Road at Bakerville Road)
Switch 506-24 (Corner Slocum Road at Russells Mills Road)

Close: Tie Switch T1-506-524 (Russells Mills Road)
Tie Switch T1-505-506 (Russells Mills Road)

BACK UP FISHER ROAD SUBSTATION FROM CROSS ROAD

Close: Tie Switch T1-525-531 (on ROW at State Road)
525 Circuit Regulator to Automatic (regulating Fisher Road 13.2kV bus)

Diagrams T3 through T8.

Load served will be 31.9 MW +j8.0 MVAR (33 MVA), 64% over 20 MVA LTE of Cross Road #111 Transformer. Limited duration load shedding is necessary in Dartmouth and Westport until a portion of the #109 line can be restored to service.

Results:

After all switching is complete, thermal and voltage violations occur as described below, and load shedding may be required in the Dartmouth and Westport areas to respect transformer LTE ratings.

Violations:

Overloads - Cross Road #111 transformer bank flow 64% over 20 MVA LTE Rating.

Pine Street #60 circuit 400 kcmil cable at 100% of 6.8 MVA LTE rating.

Bolton #505 circuit #2 Copper conductor at 103% of 6.8 MVA LTE rating.

Limited duration load shedding required to respect Cross Road transformer rating.

Voltage - Unacceptable voltages on Fisher Road #523 and #524 circuits (< 0.95 per unit), with #525 line regulator at maximum 6.25% boost.

Additional Actions Required / Recommendations:

Installation of new 115kV SCADA-controlled motor-operating sectionalizing switches on 115kV lines coming into Cross Road to permit either transformer to be switched to either 115kV line, as per PAD document that has been approved.

After installation, the switches will permit either Cross Road transformer to be switched to either 115kV line (#109 or #111). Thus, outage of #109 line will only result in long-term outage of the Fisher Road Substation #657.

Upgrade "temporary" connection of Cross Road Substation #651 #111 transformer to remove 20 MVA limitation described at *Cross Road Substation #651* under *New Bedford District.* This upgrade will permit use of full 44.8 MVA top nameplate rating of Cross Road #111 transformer without need for load shedding for this contingency.

PAC

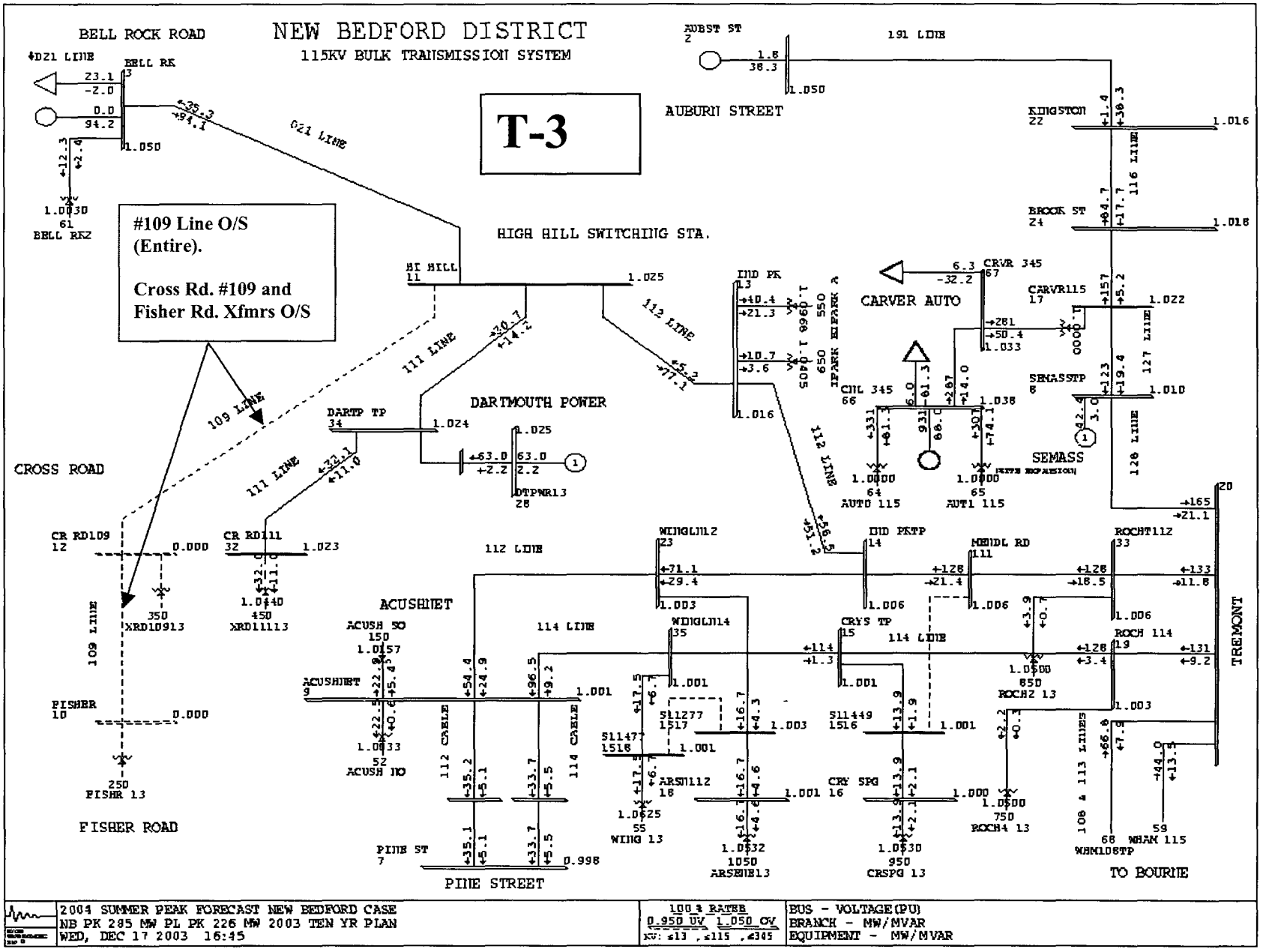
NEW BEDFORD DISTRICT
115KV BULK TRANSMISSION SYSTEM
T-3
#109 Line O/S (Entire).
Cross Rd. #109 and Fisher Rd. Xfmrs O/S
BELL ROCK ROAD
BELL RK
BELL RK2
021 LINE
HIGH HILL SWITCHING STA.
HI HILL
111 LINE
112 LINE
109 LINE
DARTMOUTH POWER
DARTP TP
DTPWR13
CROSS ROAD
CR RD109
CR RD111
XRD10913
XRD11113
FISHER
FISHR 13
FISHER ROAD
ACUSHNET
ACUSH SO
ACUSHNET
ACUSH NO
114 LINE
112 CABLE
114 CABLE
PINE ST
PINE STREET
WINGLN12
WINGLN14
WING 13
ARSN112
ARSENE13
IND PK
IND PKTP
CRYS TP
CRY SPG
CRSPG 13
MENDL RD
ROCHT112
ROCH 114
ROCH2 13
ROCH4 13
WHAM 115
WHAM108TP
TO BOURNE
TREMONT
AUBST ST
AUBURN STREET
191 LINE
KINGSTON
BROOK ST
116 LINE
CARVR 345
CARVR115
CARVER AUTO
127 LINE
SEMASSTP
SEMASS
128 LINE
CNL 345
AUT0 115
AUT1 115
2004 SUMMER PEAK FORECAST NEW BEDFORD CASE
NB PK 285 MW PL PK 226 MW 2003 TEN YR PLAN
WED, DEC 17 2003 16:45
100 % RATEB
0.950 UV 1.050 OV
BUS - VOLTAGE(PU)
BRANCH - MW/MVAR
EQUIPMENT - MW/MVAR

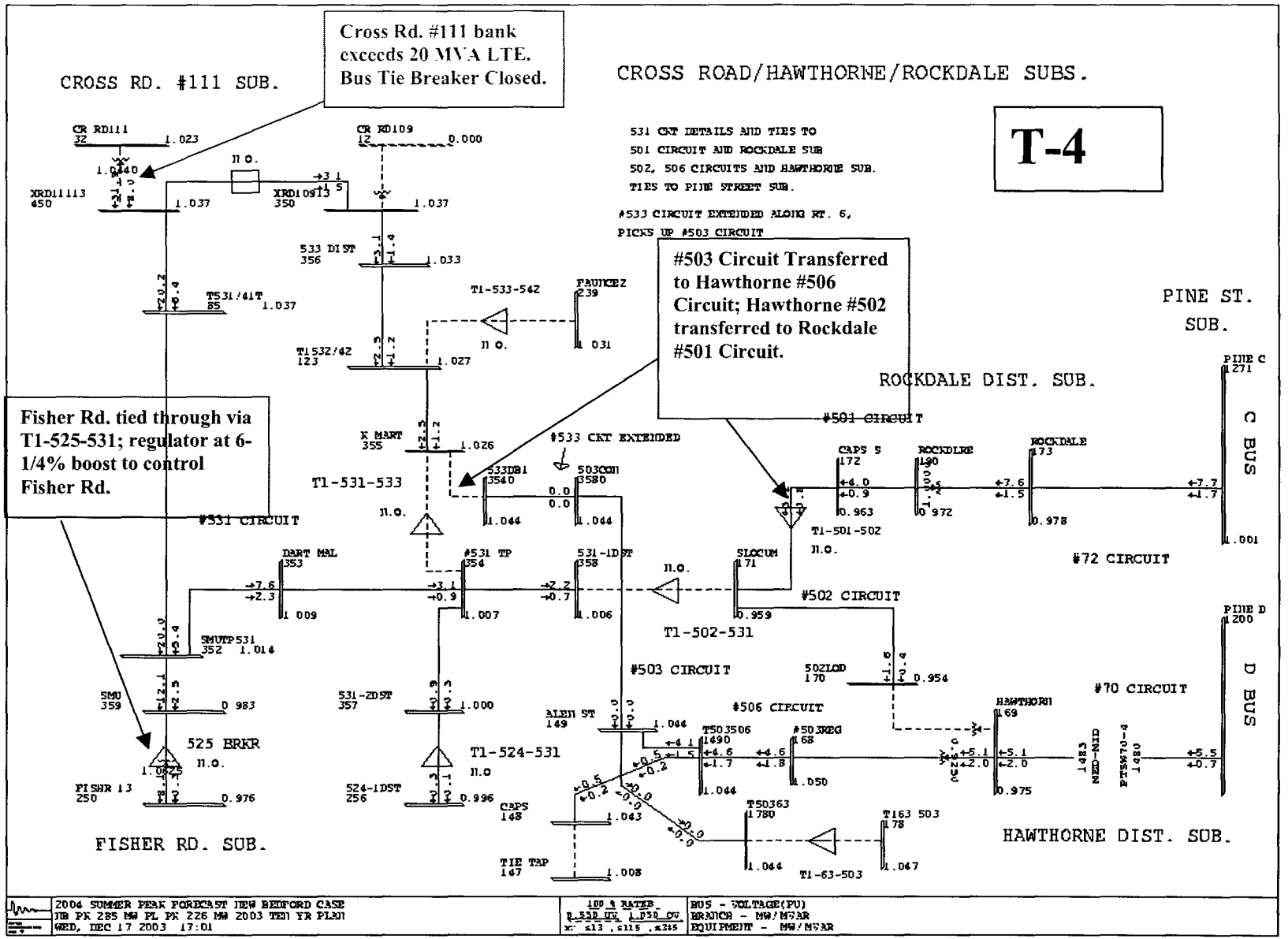
Cross Rd. #111 bank exceeds 20 MVA LTE. Bus Tie Breaker Closed.
CROSS RD. #111 SUB.
CROSS ROAD/HAWTHORNE/ROCKDALE SUBS.
T-4
531 CKT DETAILS AND TIES TO
501 CIRCUIT AND ROCKDALE SUB
502, 506 CIRCUITS AND HAWTHORNE SUB.
TIES TO PINE STREET SUB.
#533 CIRCUIT EXTENDED ALONG RT. 6,
PICKS UP #503 CIRCUIT
#503 Circuit Transferred to Hawthorne #506 Circuit; Hawthorne #502 transferred to Rockdale #501 Circuit.
PINE ST. SUB.
ROCKDALE DIST. SUB.
Fisher Rd. tied through via T1-525-531; regulator at 6-1/4% boost to control Fisher Rd.
#501 CIRCUIT
#533 CKT EXTENDED
T1-531-533
#531 CIRCUIT
T1-501-502
#72 CIRCUIT
#502 CIRCUIT
T1-502-531
#503 CIRCUIT
#506 CIRCUIT
#70 CIRCUIT
525 BRKR
T1-524-531
FISHER RD. SUB.
HAWTHORNE DIST. SUB.
T1-63-503
C BUS
D BUS
2004 SUMMER PEAK FORECAST NEW BEDFORD CASE
NB PK 285 MW PL PK 226 MW 2003 TEN YR PLAN
WED, DEC 17 2003 17:01
BUS - VOLTAGE(PU)
BRANCH - MW/MVAR
EQUIPMENT - MW/MVAR

T-5

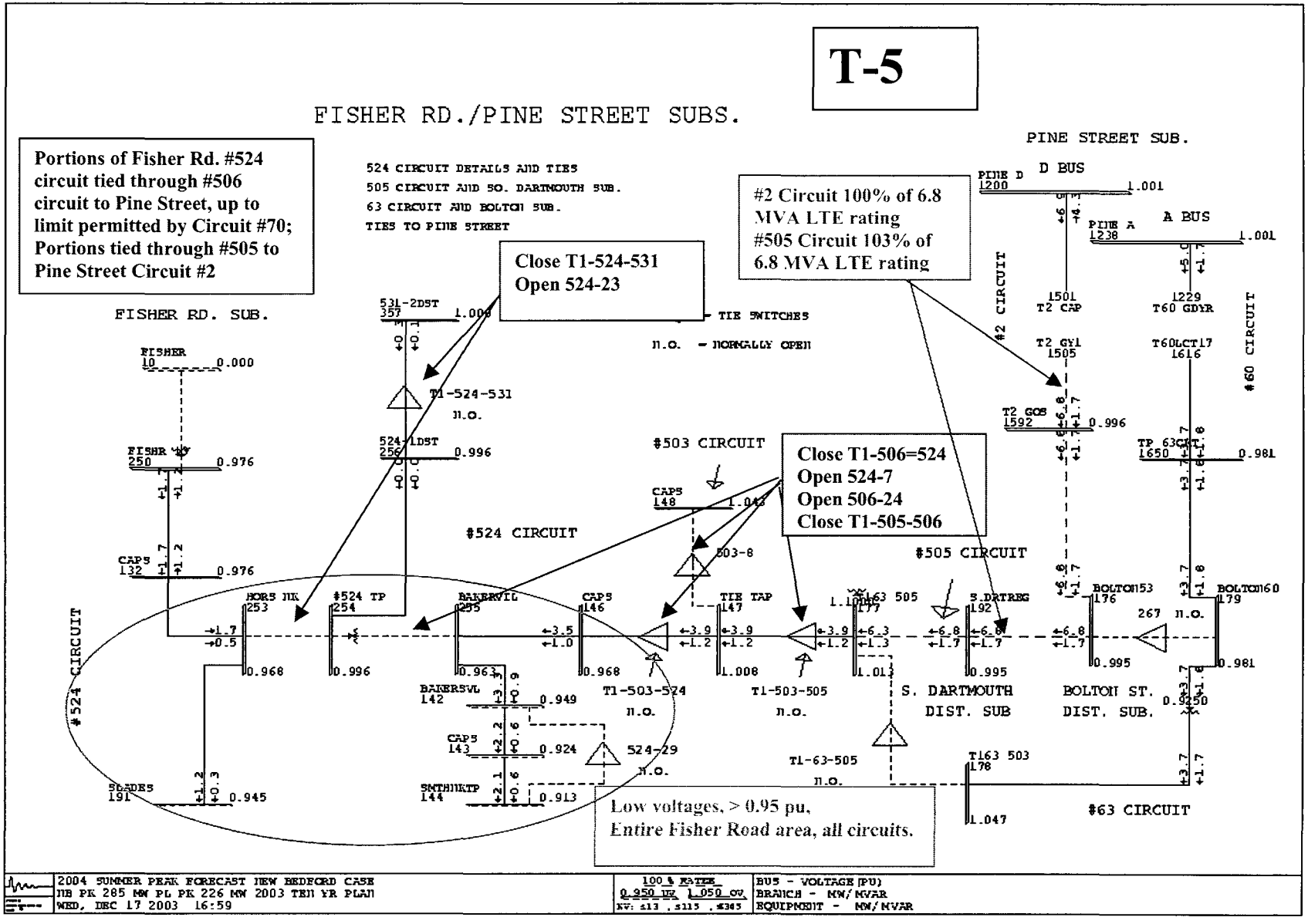
FISHER RD./PINE STREET SUBS.
Portions of Fisher Rd. #524 circuit tied through #506 circuit to Pine Street, up to limit permitted by Circuit #70; Portions tied through #505 to Pine Street Circuit #2
524 CIRCUIT DETAILS AND TIES
505 CIRCUIT AND SO. DARTMOUTH SUB.
63 CIRCUIT AND BOLTON SUB.
TIES TO PINE STREET
Close T1-524-531
Open 524-23
#2 Circuit 100% of 6.8 MVA LTE rating
#505 Circuit 103% of 6.8 MVA LTE rating
PINE STREET SUB.
D BUS
A BUS
FISHER RD. SUB.
TIE SWITCHES
N.O. - NORMALLY OPEN
#2 CIRCUIT
#60 CIRCUIT
#503 CIRCUIT
#524 CIRCUIT
#505 CIRCUIT
#63 CIRCUIT
Close T1-506=524
Open 524-7
Open 506-24
Close T1-505-506
T1-524-531
T1-503-524
T1-503-505
T1-63-505
524-29
503-8
S. DARTMOUTH DIST. SUB
BOLTON ST. DIST. SUB.
Low voltages, > 0.95 pu,
Entire Fisher Road area, all circuits.
2004 SUMMER PEAK FORECAST NEW BEDFORD CASE
NB PK 285 MW PL PK 226 MW 2003 TEN YR PLAN
WED, DEC 17 2003 16:59
100 % RATING
0.950 UV 1.050 OV
BUS - VOLTAGE (PU)
BRANCH - MW/MVAR
EQUIPMENT - MW/MVAR

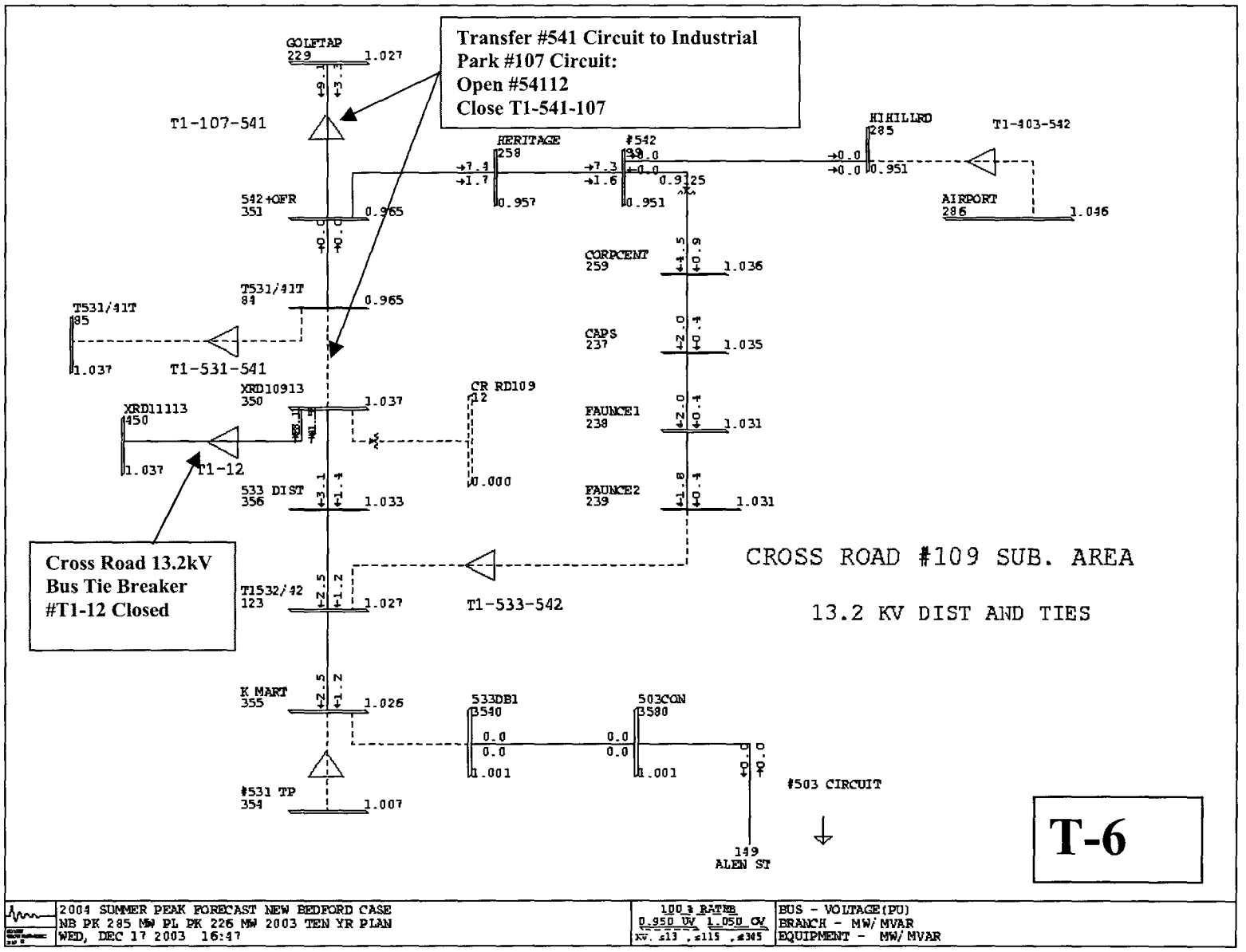
Transfer #541 Circuit to Industrial Park #107 Circuit:
Open #54112
Close T1-541-107
GOLFTAP
229
1.027
T1-107-541
HERITAGE
258
0.957
#542
0.951
0.925
HIHILLRD
285
0.951
T1-403-542
AIRPORT
286
1.046
542+OFR
351
0.965
CORPCENT
259
1.036
T531/41T
84
0.965
T531/41T
85
1.037
T1-531-541
CAPS
237
1.035
XRD10913
350
1.037
CR RD109
12
0.000
XRD11113
450
1.037
T1-12
FAUNCE1
238
1.031
533 DIST
356
1.033
FAUNCE2
239
1.031
Cross Road 13.2kV Bus Tie Breaker #T1-12 Closed
T1532/42
123
1.027
T1-533-542
CROSS ROAD #109 SUB. AREA
13.2 KV DIST AND TIES
K MART
355
1.026
533DB1
3540
503CON
3580
1.001
1.001
#531 TP
354
1.007
#503 CIRCUIT
149
ALEN ST
T-6
2004 SUMMER PEAK FORECAST NEW BEDFORD CASE
NB PK 285 MW PL PK 226 MW 2003 TEN YR PLAN
WED, DEC 17 2003 16:47
100 % RATEB
0.950 UV 1.050 OV
kv. ≤13 , ≤115 , ≥345
BUS - VOLTAGE(PU)
BRANCH - MW/MVAR
EQUIPMENT - MW/MVAR

T-7

CROSS ROAD #111 SUB. AREA

13.2 KV DIST AND TIES

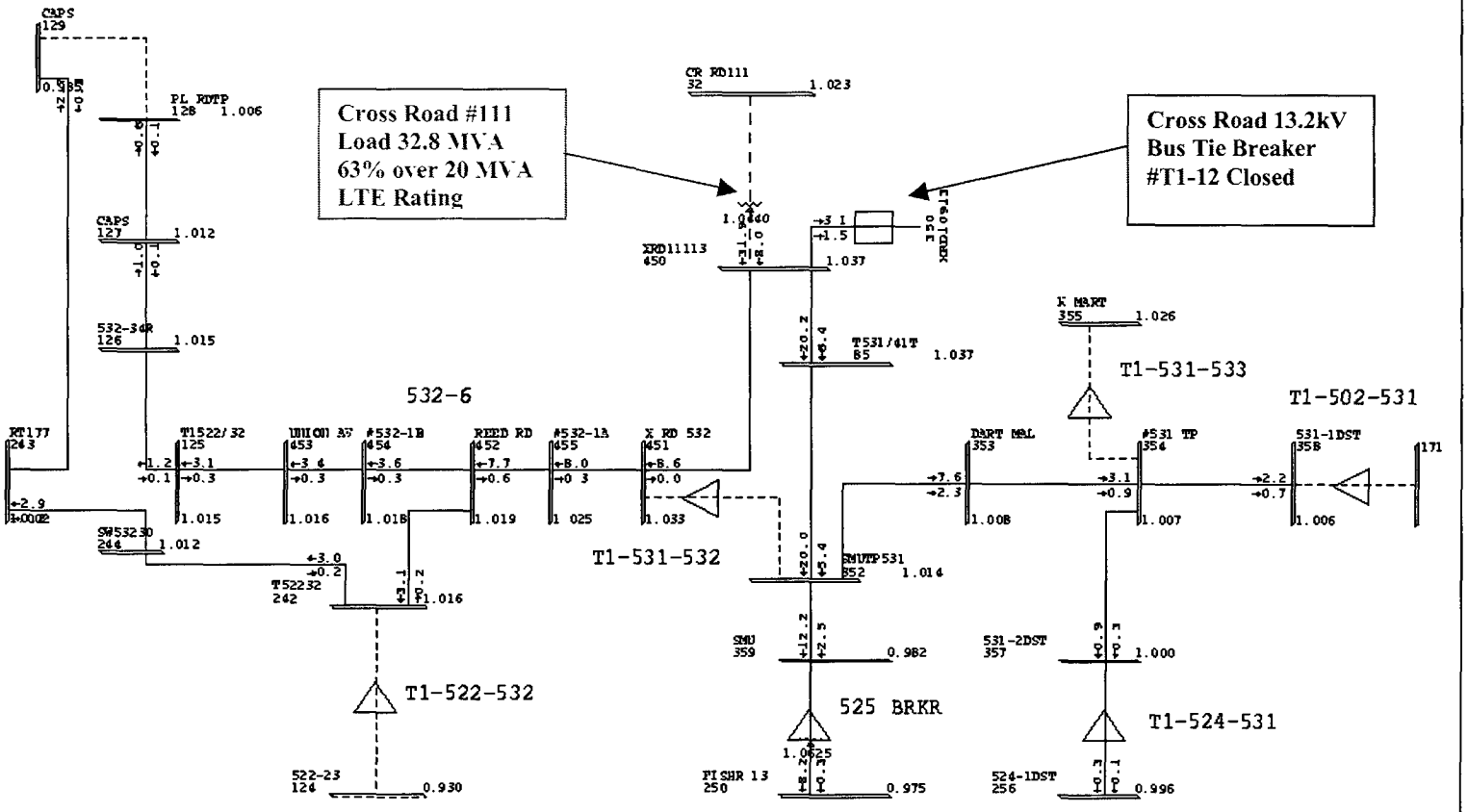

2004 SUMMER PEAK FORECAST NEW BEDFORD CASE
NB PK 285 MW PL PK 226 MW 2003 TEN YR PLAN
WED, DEC 17 2003 16:47

100 % RATEB
0.950 UV 1.050 OV
KV: ≤13 , ≤115 , ≥345

BUS - VOLTAGE(PU)
BRANCH - MW/MVAR
EQUIPMENT - MW/MVAR

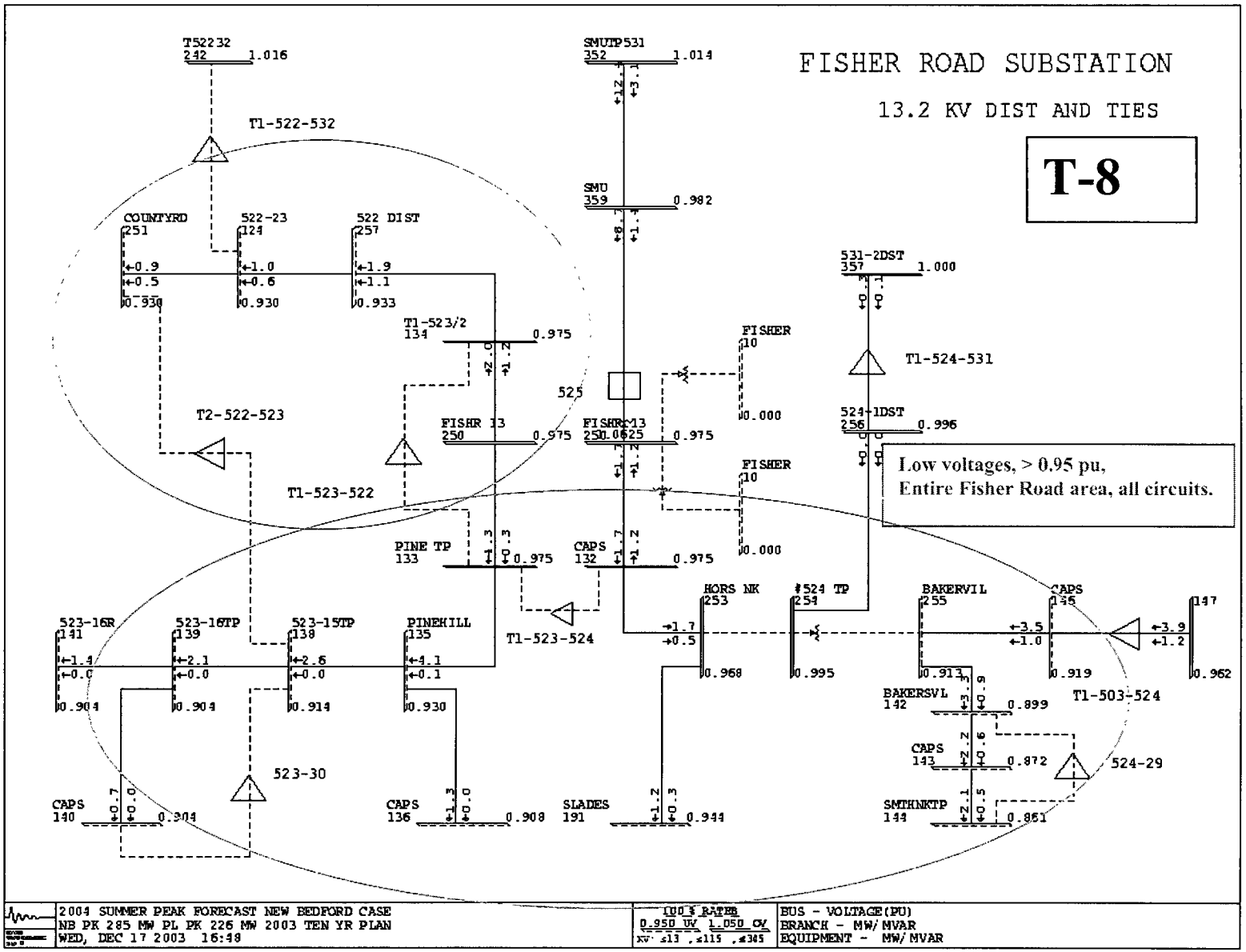
FISHER ROAD SUBSTATION
13.2 KV DIST AND TIES
T-8
Low voltages, > 0.95 pu,
Entire Fisher Road area, all circuits.
T52232 242 1.016
SMUTP531 352 1.014
SMU 359 0.982
T1-522-532
COUNTYRD 251
522-23 124
522 DIST 257
T1-523/2 134 0.975
T2-522-523
T1-523-522
FISHR 13 250 0.975
FISHR 13 250 0.625 0.975
525
FISHER 10 0.000
FISHER 10 0.000
531-2DST 357 1.000
T1-524-531
524-1DST 256 0.996
PINE TP 133 0.975
CAPS 132 0.975
T1-523-524
HORS NK 253
#524 TP 254
BAKERVIL 255
CAPS 146
147
523-16R 141
523-16TP 139
523-15TP 138
PINEHILL 135
0.968
0.995
0.913
0.919
0.962
BAKERSVL 142 0.899
T1-503-524
CAPS 143 0.872
524-29
523-30
CAPS 140 0.904
CAPS 136 0.908
SLADES 191 0.944
SMTHNKTP 144 0.861
2004 SUMMER PEAK FORECAST NEW BEDFORD CASE
NB PK 285 MW PL PK 226 MW 2003 TEN YR PLAN
WED, DEC 17 2003 16:48
100% RATEB
0.950 UV 1.050 OV
BUS - VOLTAGE(PU)
BRANCH - MW/MVAR
EQUIPMENT - MW/MVAR

2004 T&D OPERATING STUDY

345 & 115kV Transmission Facilities

#111 115KV LINE (INDUSTRIAL PARK-HIGH HILL-CROSS RD.) OUTAGE CONTINGENCY

#111 795 ACSR 115KV OVERHEAD TRANSMISSION LINE

Overload Ratings:

Summer Normal	227 MVA
Summer Emergency	246 MVA
Winter Normal	269 MVA
Winter Emergency	297 MVA

Summer Limit is line conductor. Section from High Hill to Cross Road has same Summer Ratings. Loss of Line on relay operation trips Dartmouth Power (El Paso Electric) power plant.

Action Required:

Isolate #111 115kV line, Industrial Park-High Hill –DPA – Cross Road.

Open: #11142 115kV Circuit Breaker at Hill Switching Station
#11166 Switch at Industrial Park
#11152 Circuit Breaker at Dartmouth Power
#11112 Circuit Switcher at Cross Road.

Close: Nothing

Note: The existing sectionalizing Switch arrangement at High Hill does not permit the High Hill – Cross Road portion of the line to be restored, absent restoration of the High Hill – Industrial Park section, by physical disconnection of the line by lifting of taps.

Further: Dartmouth Power is not to be operated on the #111 with Tie Switch #T1-109-111 closed (due to relaying restrictions).

With the #111 line out, the Cross Road #111 transformer bank is out of service**, the Dartmouth Power plant is out of service.

** Follow the switching procedure discussed previously for Cross Road #111 transformer outage.

Loss of #111 Transformer

Open: Circuit Switcher 11112
Main Circuit Breaker 111B12
Feeder Breaker #54112

Close: Bus Tie Breaker #T1-12
Tie Switch #T1-107-541 on ROW

Results:

After all switching is complete, results identical to Cross Road #111 transformer outage (previously discussed). See **Diagram T-9**.

Violations:

Overloads	Cross Road #109 bank at 26 MVA, 79% of after all switching is complete. Before distribution switching completed, Cross Road #109 bank would be loaded to 31 MVA, 94% of 32 MVA LTE rating.
Voltage	No voltage violations.

Additional Actions Required:

Monitor #109 Transformer Bank Loading and temperature. Additional load transfers may be required if transformer demonstrates overheating.

Recommendations:

Installation of new 115kV SCADA-controlled motor-operated sectionalizating switches on 115kV lines coming into Cross Road to permit either transformer to be switched to either 115kV line, as per PAD document that has been approved.

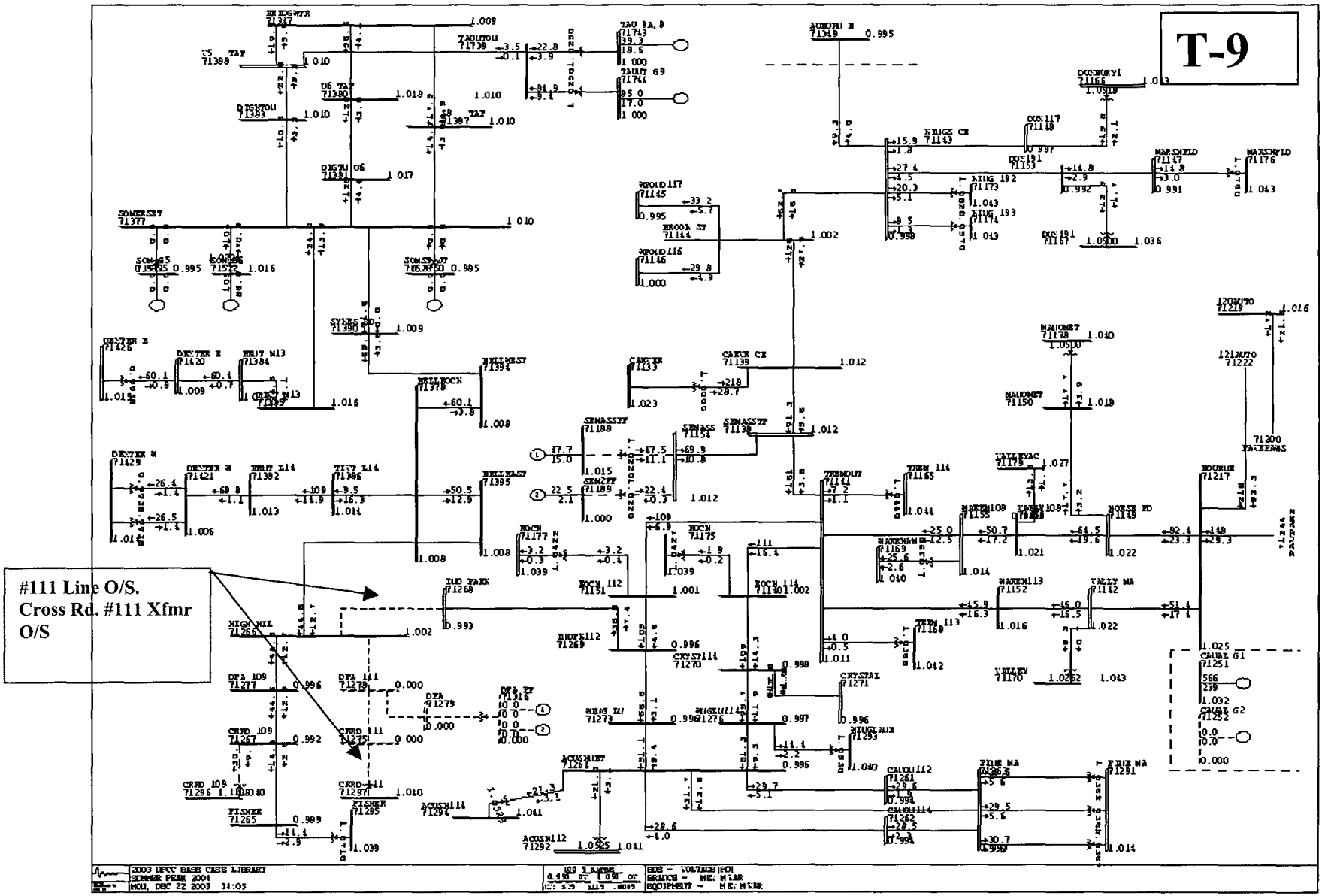
T-9
#111 Line O/S.
Cross Rd. #111 Xfmr
O/S

2004 T&D OPERATING STUDY

345 & 115kV Transmission Facilities

#112 115KV LINE (TREMONT-ROCHESTER-IND. PARK TAP-ACUSHNET-INDUSTRIAL PARK-ARSENE ST.) OUTAGE CONTINGENCY

#112 795 ACSR 115KV OVERHEAD TRANSMISSION LINE

Overload Ratings:

Summer Normal	227 MVA
Summer Emergency	246 MVA
Winter Normal	284 MVA
Winter Emergency	297 MVA

Action Required:

1. Isolate #112 115kV line, Tremont-Rochester-Industrial Park Tap-Wing Lane-Acushnet-Industrial Park.

   Open: #11232 Circuit Breaker at Tremont Switching Station
   #11222 Circuit Breaker at Acushnet Substation
   #11242 Circuit Switcher at Arsene Street Substation
   #11262 Circuit Switcher at Industrial Park Substation
   #11252 Circuit Switcher at Rochester Substation

   Close: Nothing

   Post contingency, transformer outages at Arsene Street, Industrial Park, and Rochester.

2. If Wing Lane-Arsene Street is faulted section,

   Open: #11277 Switch at Arsene Street

   Then follow Arsene Street transformer outage contingency switching previously recommended under *Arsene Street Substation #654.*

3. If Tremont-Acushnet or Industrial Park lateral is faulted section,

   Open: #11277 switch at Wing Lane
   Close: #T1-112-114 at Wing Lane.

   Restores Arsene Street lateral and transformer.

   Close: T1-62 at Industrial Park

Restores all Industrial Park load to the #111 transformer bank. Follow procures for Industrial Park #112 transformer bank previously discussed at *Industrial Park Substation #636.*

Close: T1-52 at Rochester.

Restores all Rochester load to the Rochester #114 bank. Follow procures for Rochester #114 transformer bank previously discussed at *Rochester Substation #745.*

Results:

See **Diagrams T-10 and T-11** for post-contingency conditions with Tremont-Acushnet-Industrial Park sections of #112 line O/S. If Dartmouth Power generation is offline post contingency, voltages less than 0.95 ANSI minimum will occur on the 115kV system from High Hill to Fisher Road Substation. Bus voltages on the 13.2kV side of Cross Road and Fisher Road Substations will be approximately 1.02 per unit, with LTC's at maximum boost on all three substation transformers.

Violations:

Overloads	-	None
Voltage	-	Voltages 0.93 per unit on 115kV system High Hill to Fisher Road. 13.2kV bus voltages of 1.02 per unit at station bus will yield low voltages at the end of 13.2kV distribution feeders.

Additional Actions Required / Recommendations:

Dispatch Dartmouth Power online post-contingency for voltage support during #112 line outage at Summer peak conditions.

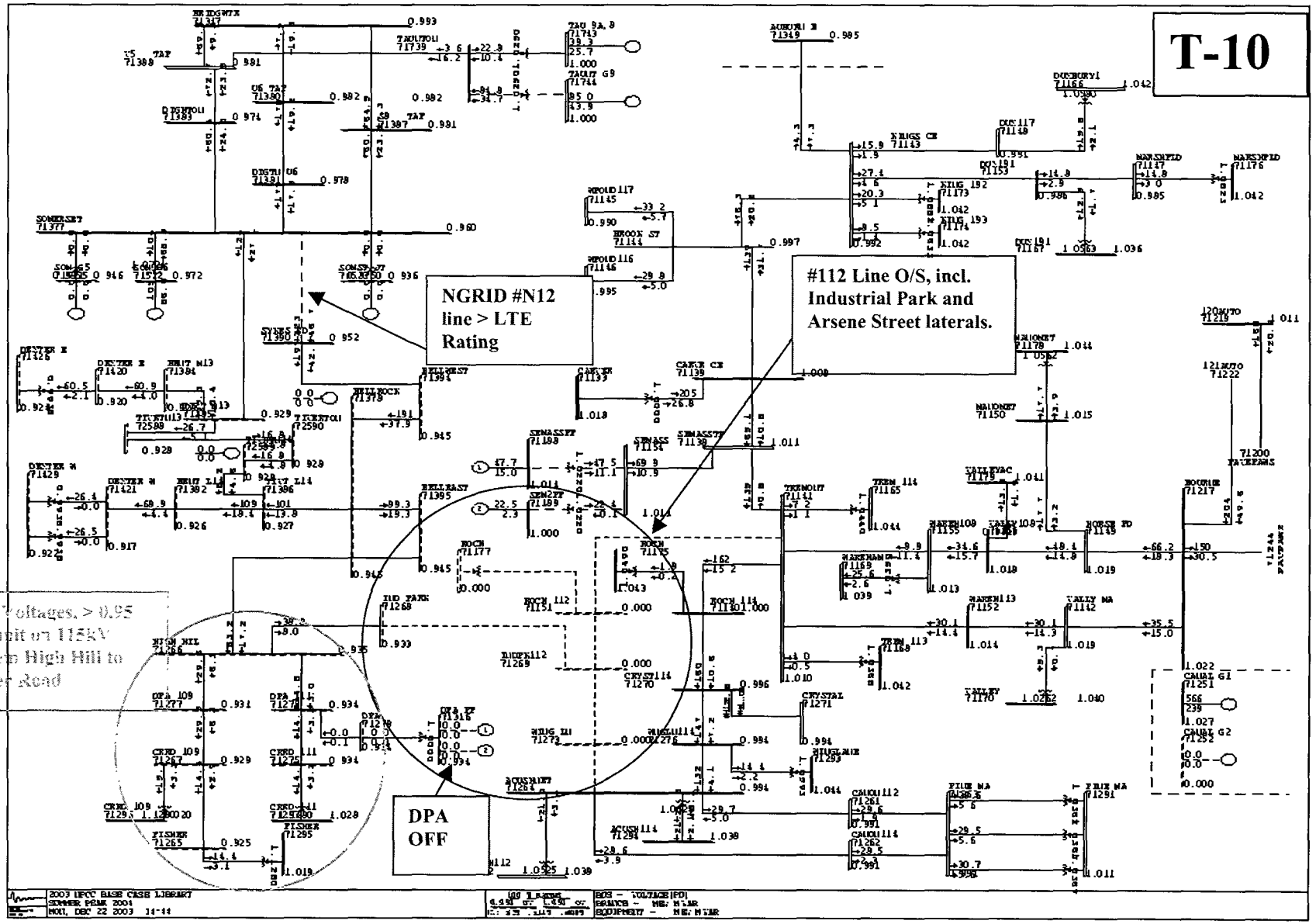
T-10
NGRID #N12 line > LTE Rating
#112 Line O/S, incl. Industrial Park and Arsene Street laterals.
Low Voltages, > 0.95 per unit on 115kV System High Hill to Fisher Road
DPA OFF

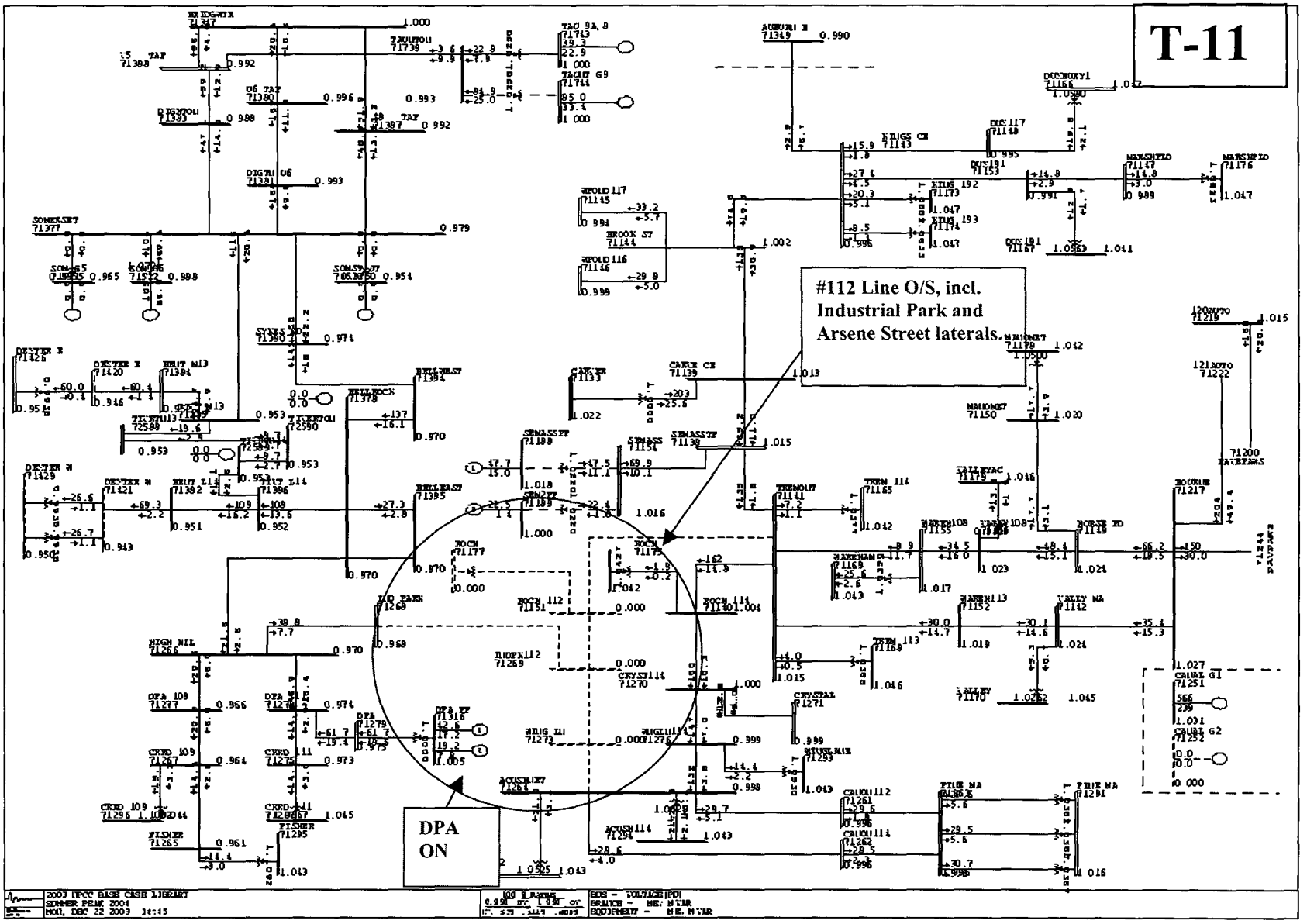
T-11
#112 Line O/S, incl. Industrial Park and Arsene Street laterals.
DPA ON
2003 IPCC BASE CASE LIBERTY
SUMMER PEAK 2001
MON, DEC 22 2003 14:45

2004 T&D OPERATING STUDY

345 & 115kV Transmission Facilities

#112 115KV LINE (ACUSHNET - PINE ST.) OUTAGE CONTINGENCY

#112 250 KCMIL 115KV GAS-FILLED UNDERGROUND PIPE-TYPE TRANSMISSION CABLE

Overload Ratings:

	Summer Normal	60 MVA
Summer Emergency	60 MVA	
	Winter Normal	60 MVA
	Winter Emergency	60 MVA

Action Required:

1. Isolate #112 115kV cable, Acushnet-Pine Street:

   Open: #11282 Circuit Breaker at Acushnet Substation
   #11202 Circuit Breaker at Pine Street Substation

   Close: Nothing

Results:

After all switching is complete (**See Diagram T-12**), no thermal or voltage violations.

Violations:

Overloads - None

Voltage - None

Additional Actions Required / Recommendations:

None

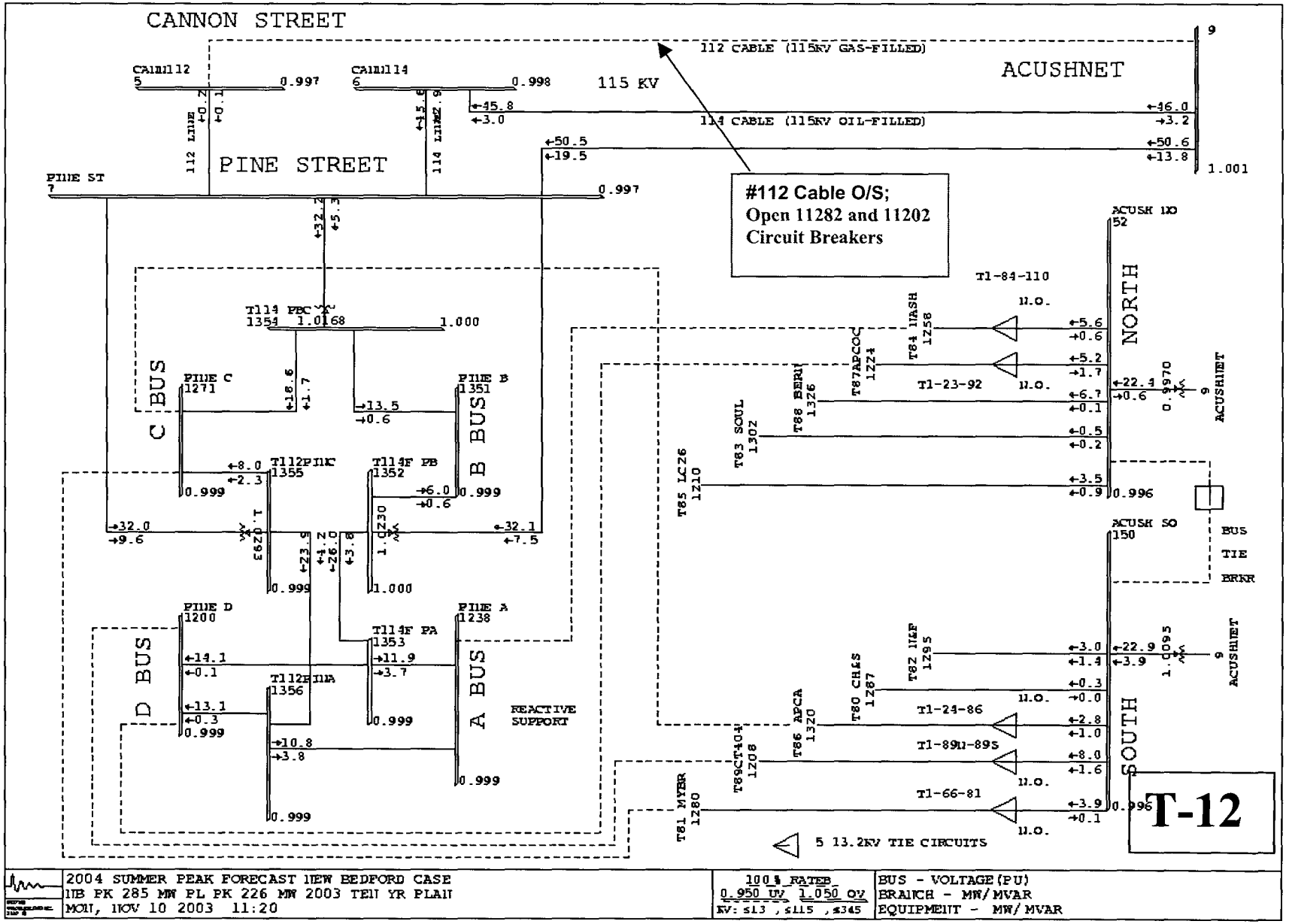

2004 SUMMER PEAK FORECAST NEW BEDFORD CASE
NB PK 285 MW PL PK 226 MW 2003 TEN YR PLAN
MON, NOV 10 2003 11:20

100% RATED
0.950 UV 1.050 OV
KV: ≤13 , ≤115 , ≤345

BUS - VOLTAGE(PU)
BRANCH - MW/MVAR
EQUIPMENT - MW/MVAR

2004 T&D OPERATING STUDY

345 & 115kV Transmission Facilities

#113 115KV LINE (BOURNE-VALLEY-TREMONT) OUTAGE CONTINGENCY

#113 795 ACSR 115KV OVERHEAD TRANSMISSION LINE

Overload Ratings:

Summer Normal	227 MVA
Summer Emergency	246 MVA
Winter Normal	284 MVA
Winter Emergency	297 MVA

Summer Limit is Line Conductor.

Action Required:

1. Isolate #113 115kV line, Bourne-Valley-Tremont:

   Open: #11372 Circuit Breaker at Bourne Switching Station
   #11332 Circuit Breaker at Tremont Switching Station
   #11352 Circuit Switcher at Valley

   Close: Temporary 23kV Bus tie Breaker at Valley (tie switch #8952A).

   Note: New 23kV Bus Tie Breaker #T52 is not yet in service.

Results:

After all switching is complete, no thermal or voltage violations (**Diagram T-13**). Results identical to Valley GE #113 transformer outage contingency, previously discussed.

Violations:

Overloads - None

Voltage - None

Additional Actions Required / Recommendations:

None

P

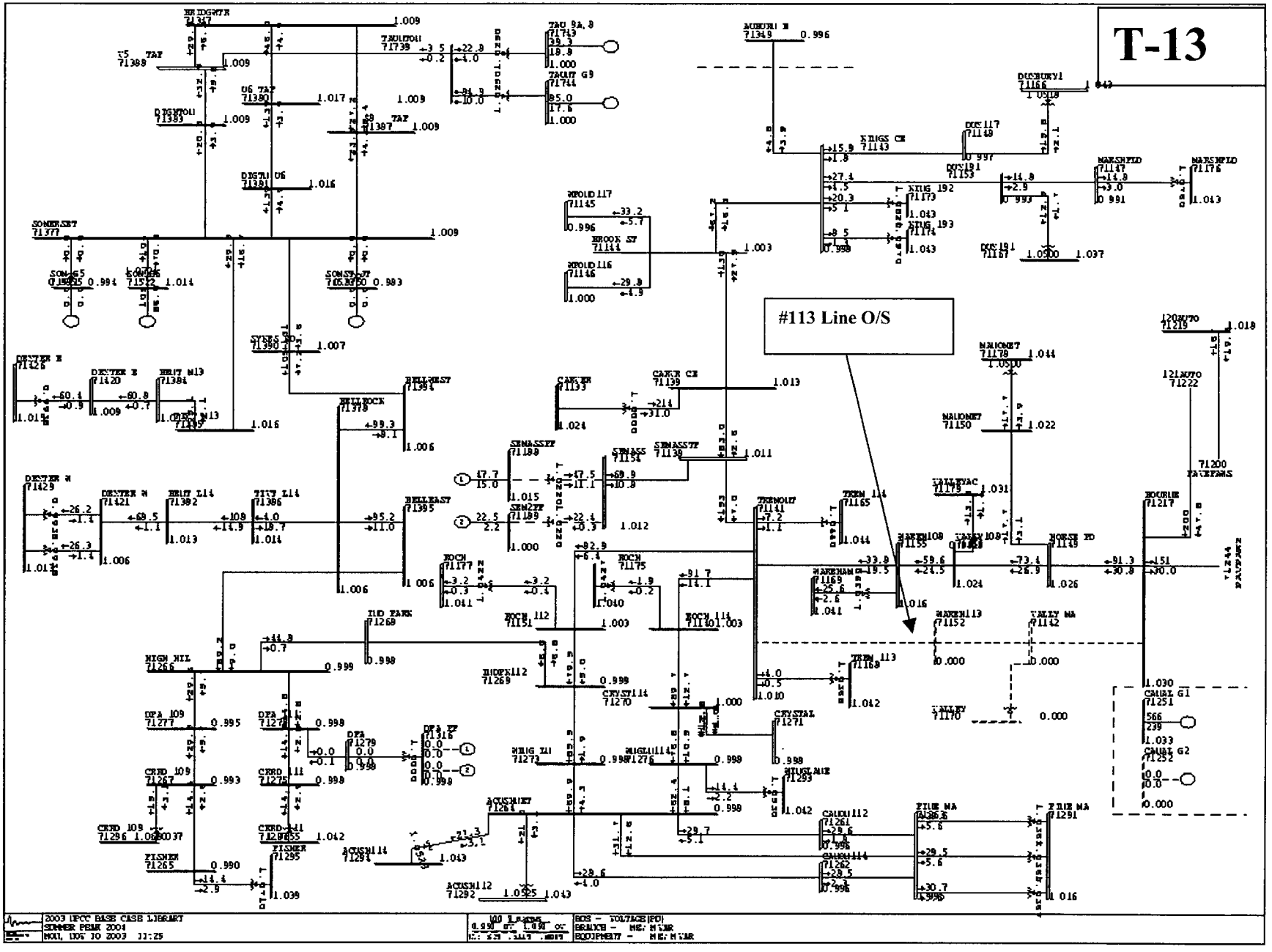
T-13
#113 Line O/S
2003 UPCC BASE CASE LIBRARY
SUMMER PEAK 2004
MON, NOV 10 2003 11:25

2004 T&D OPERATING STUDY

345 & 115kV Transmission Facilities

#114 115KV LINE (TREMONT-ROCHESTER-CRYSTAL SPRING-ACUSHNET) OUTAGE CONTINGENCY

#114 2338 ACAR 115KV OVERHEAD TRANSMISSION LINE

Overload Ratings:

Summer Normal	241 MVA*
Summer Emergency	277 MVA*
Winter Normal	269 MVA*
Winter Emergency	310 MVA*

*Limitation is a 1200 Ampere wave trap at Tremont S/S.

Line Conductor is otherwise rated as follows: (Summer 413/462 MVA, Winter 533/563 MVA).
Crystal Spring lateral is 4/0 ACSR conductor: (Summer 80/92 MVA, Winter 90/103 MVA).

Action Required:

1. Isolate #114 115kV line, Tremont-Rochester-Crystal Tap-Crystal Spring-Wing Lane-Acushnet:

   Open: #11432 Circuit Breaker at Tremont Switching Station
   #11422 Circuit Breaker at Acushnet Substation
   #11477 Switch at Wing Lane
   #11452 Circuit Switcher at Rochester
   #11449 Switch at Crystal Spring Tap

   Close: T1-52 Tie Breaker at Rochester (restores Rochester load to #112 bank)*
   T1-112-114 at Wing Lane (restores Wing Lane transformer to #112 line)

   * See Rochester #114 transformer outage previously discussed. Crystal Spring transformer and load will be out of service. Crystal Spring #302 circuit can be transferred to Arsene Street Substation #221 line using switching described at *Crystal Spring Substation #646.*

2. If Acushnet-Tremont is faulted section, restore the Crystal Spring #114 lateral to the #112 line:

   Open: #11449 Switch at Crystal Spring Tap (verify open)

   Close: #11249 Switch at Crystal Spring Tap

3. If Crystal Spring Tap is faulted section, isolate this section and restore Tremont-Acushnet backbone:

   Open: #11449 Switch at Crystal Spring Tap (verify open)
   #T1-112-114 Switch at Wing Lane
   #T1-52 tie breaker at Rochester

   Close: #11432 Circuit Breaker at Tremont Switching Station
   #11422 Circuit Breaker at Acushnet Substation
   #11477 Switch at Wing Lane
   #11452 Circuit Switcher at Rochester

   Then, restore Crystal Spring load via 13.2kV DSS switching as described previously for Crystal Spring transformer outage contingency at *Crystal Spring Substation #646.*

Results:

After all switching is complete, no thermal or voltage violations, see **Diagram T-14**.

Violations:

Overloads - None

Voltage - None

Additional Actions Required / Recommendations:

None

T-14

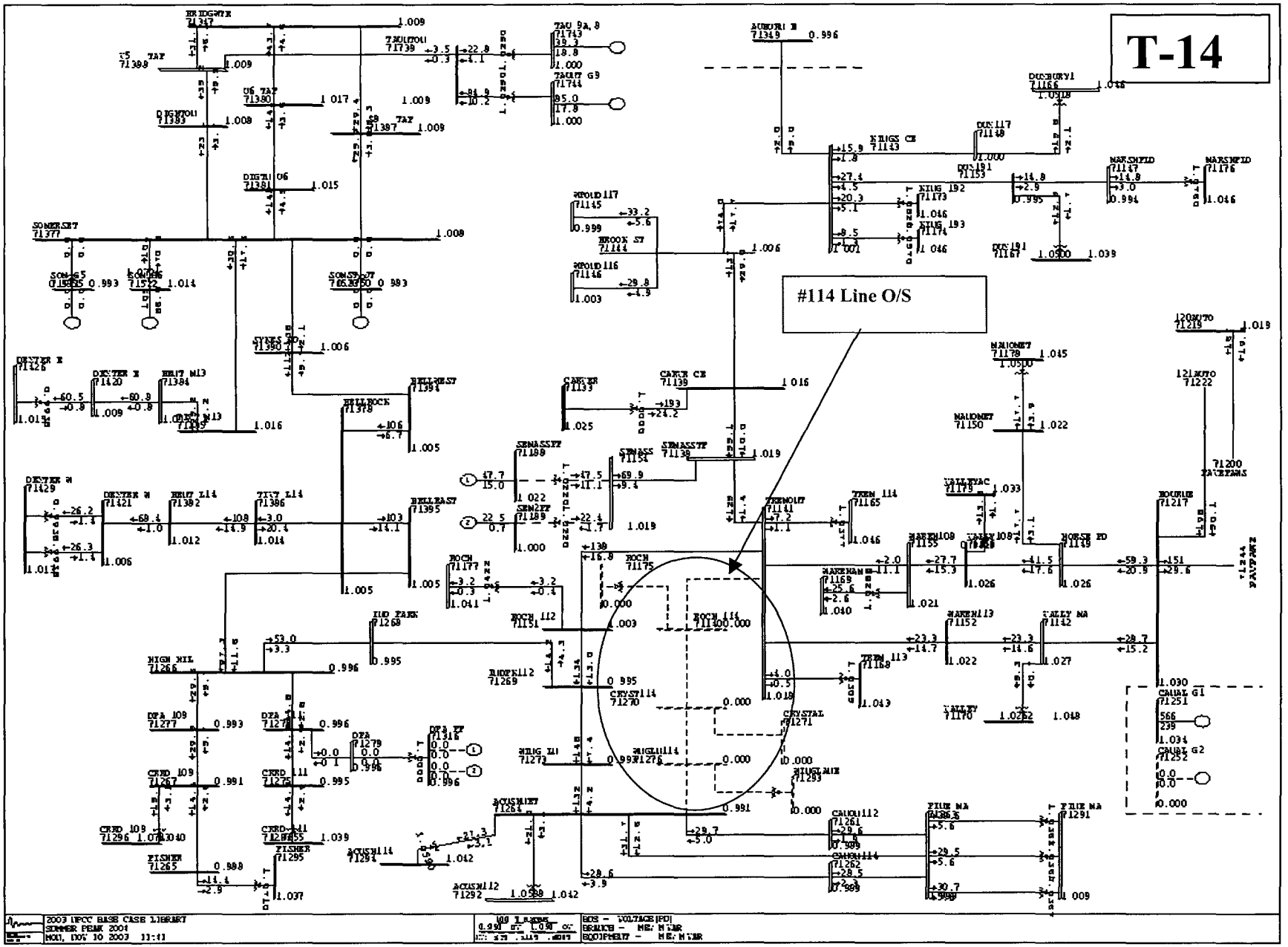
#114 Line O/S
2003 UPCC BASE CASE LIBRARY
SUMMER PEAK 2004
MON, OCT 10 2003 11:41
BUS - VOLTAGE(PU)
BRANCH - MW/MVAR
EQUIPMENT - MW/MVAR

2004 T&D OPERATING STUDY

345 & 115kV Transmission Facilities

#114 115KV LINE (ACUSHNET – PINE ST.) OUTAGE CONTINGENCY

#114 250 KMCIL 115KV OIL-FILLED UNDERGROUND PIPE-TYPE TRANSMISSION LINE

Overload Ratings:

Summer Normal		60 MVA
Summer Emergency	**60 MVA**	
Winter Normal		60 MVA
Winter Emergency		60 MVA

Action Required:

1. Isolate #114 115kV cable, Acushnet-Pine Street:

   Open: #11482 Circuit Breaker at Acushnet Substation
   #11402 Circuit Breaker at Pine Street Substation

   Close: Nothing

Results:

After all switching is complete (**See Diagram T-15**), no thermal or voltage violations.

Violations:

Overloads - None

Voltage - None

Additional Actions Required / Recommendations:

None

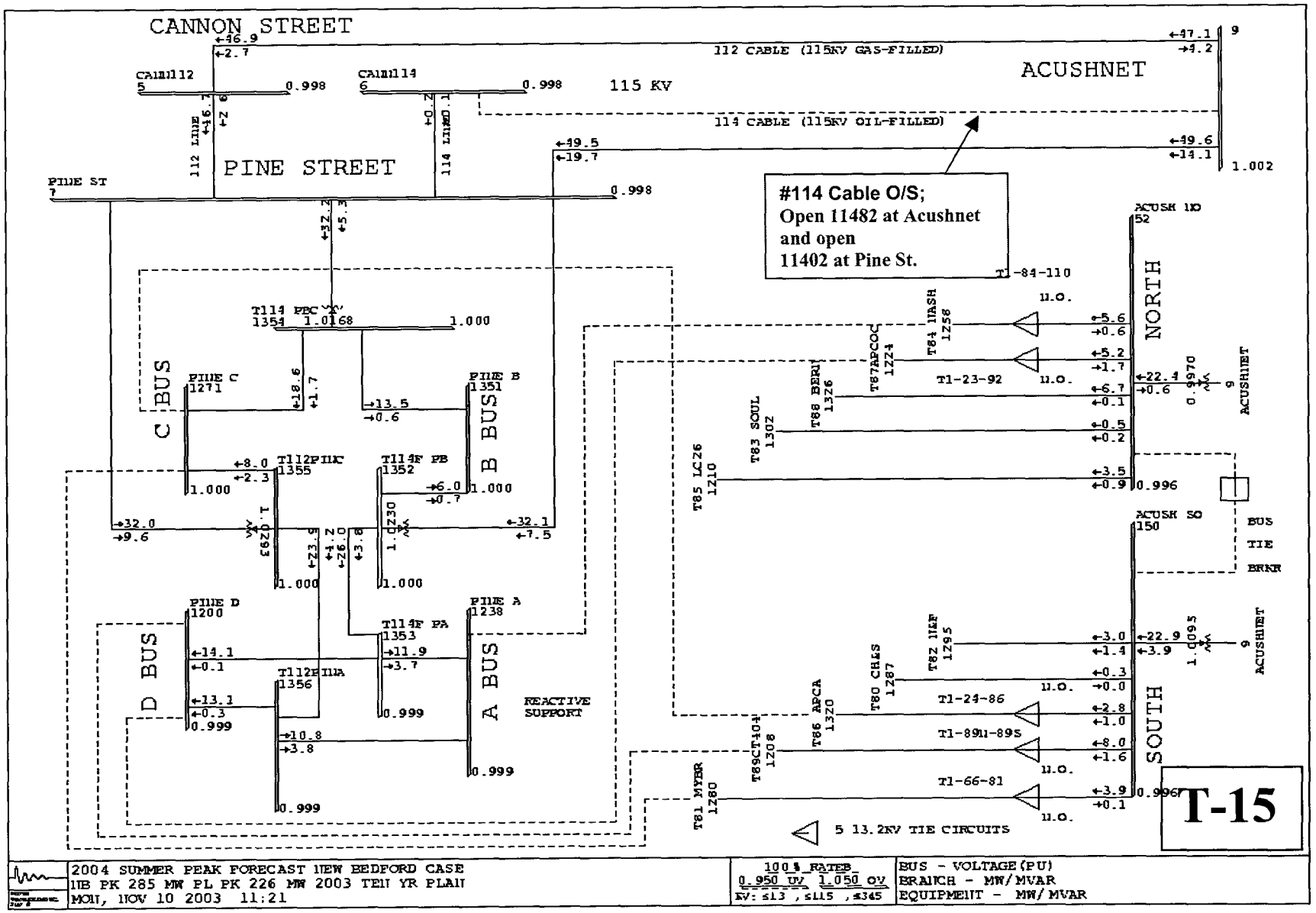
CANNON STREET
112 CABLE (115KV GAS-FILLED)
ACUSHNET
115 KV
114 CABLE (115KV OIL-FILLED)
PINE STREET
#114 Cable O/S;
Open 11482 at Acushnet
and open
11402 at Pine St.
NORTH
SOUTH
C BUS
B BUS
D BUS
A BUS
REACTIVE SUPPORT
BUS TIE BRKR
5 13.2KV TIE CIRCUITS
T1-23-92
T1-24-86
T1-8911-89S
T1-66-81
T1-84-110
2004 SUMMER PEAK FORECAST NEW BEDFORD CASE
NB PK 285 MW PL PK 226 MW 2003 TEN YR PLAN
MON, NOV 10 2003 11:21
100% RATED
0.950 UV 1.050 OV
KV: ≤13 , ≤115 , ≤345
BUS - VOLTAGE(PU)
BRANCH - MW/MVAR
EQUIPMENT - MW/MVAR
T-15

2004 T&D OPERATING STUDY

345 & 115kV Transmission Facilities

#115 115KV LINE (FALMOUTH TAP-HATCHVILLE-MASHPEE-BARNSTABLE S/S) OUTAGE CONTINGENCY

#115 795 ACSR 115KV OVERHEAD TRANSMISSION LINE

Overload Ratings:

Summer Normal	227 MVA
Summer Emergency	246 MVA
Winter Normal	284 MVA
Winter Emergency	297 MVA

Action Required:

1. Isolate #115 115kV line, Barnstable S/S-Mashpee-Hatchville-Falmouth Tap-Falmouth 115E.

   Open: #182, #482 Circuit Breakers at Barnstable Switching Station
   #11522 Circuit Breaker at Falmouth Tap Switching Station
   #11583 Circuit Switcher at Falmouth
   #11533 Circuit Switcher at Hatchville
   #11563 Circuit Switcher at Mashpee

   Close: Nothing

   Transformers at Falmouth 115E, Hatchville, and Mashpee Out of Service. Multiple transformer outages in the upper Cape area cannot be backed up via 23kV DSS switching. Load at these stations will be out of service until the faulted location on the #115 line can be ascertained and unaffected portions of the line restored.

2. If #115E Falmouth Tap to Falmouth is not faulted section,

   Open: #11526 Switch at Falmouth Tap

   Close: #11522 Circuit Breaker at Falmouth Tap
   #11583 Circuit Switcher at Falmouth 115E.

   If Line #115E is the faulted section, treat as Falmouth #115E transformer outage, and conduct 23kV DSS switching and dispatch Martha's Vineyard generation as previously documented at *Falmouth Substation #933.*

3. If #115 Falmouth Tap to Hatchville is not faulted section (and fault is not between the two sectionalizing switches at Hatchville):

Open: #11539 Switch at Hatchville

Close: #11533 Circuit Switcher at Hatchville
#11526 Switch at Falmouth Tap

These switching actions restore Hatchville transformer. Assuming Falmouth #115E not faulted either, net result here is Mashpee transformer forced out of service. Switch accordingly as discussed for Mashpee transformer outage as discussed *Mashpee Substation #946.*

4. If #115 Hatchville-Mashpee is not faulted section, fault is then between Mashpee and Barnstable S/S, and Mashpee transformer can be restored as follows:

Open: #11569 Switch at Mashpee

Close: #11563 Circuit at Mashpee
#11539 Switch at Hatchville

Net result is all substation transformers returned to service. This line segment outage is most-stressed outage configuration for #115 line as far as the Cape District transmission system is concerned, and is shown in **Diagram T-16.**

Results:

After all switching is complete, and assuming faulted section between Mashpee and Barnstable:

Violations:

Overloads - None

Voltage - None

Additional Actions Required / Recommendations:

For #115 line segment outages that result in forced transformer outages at Falmouth, Hatchville, or Mashpee, please refer to appropriate transformer outage contingency, previously documented.

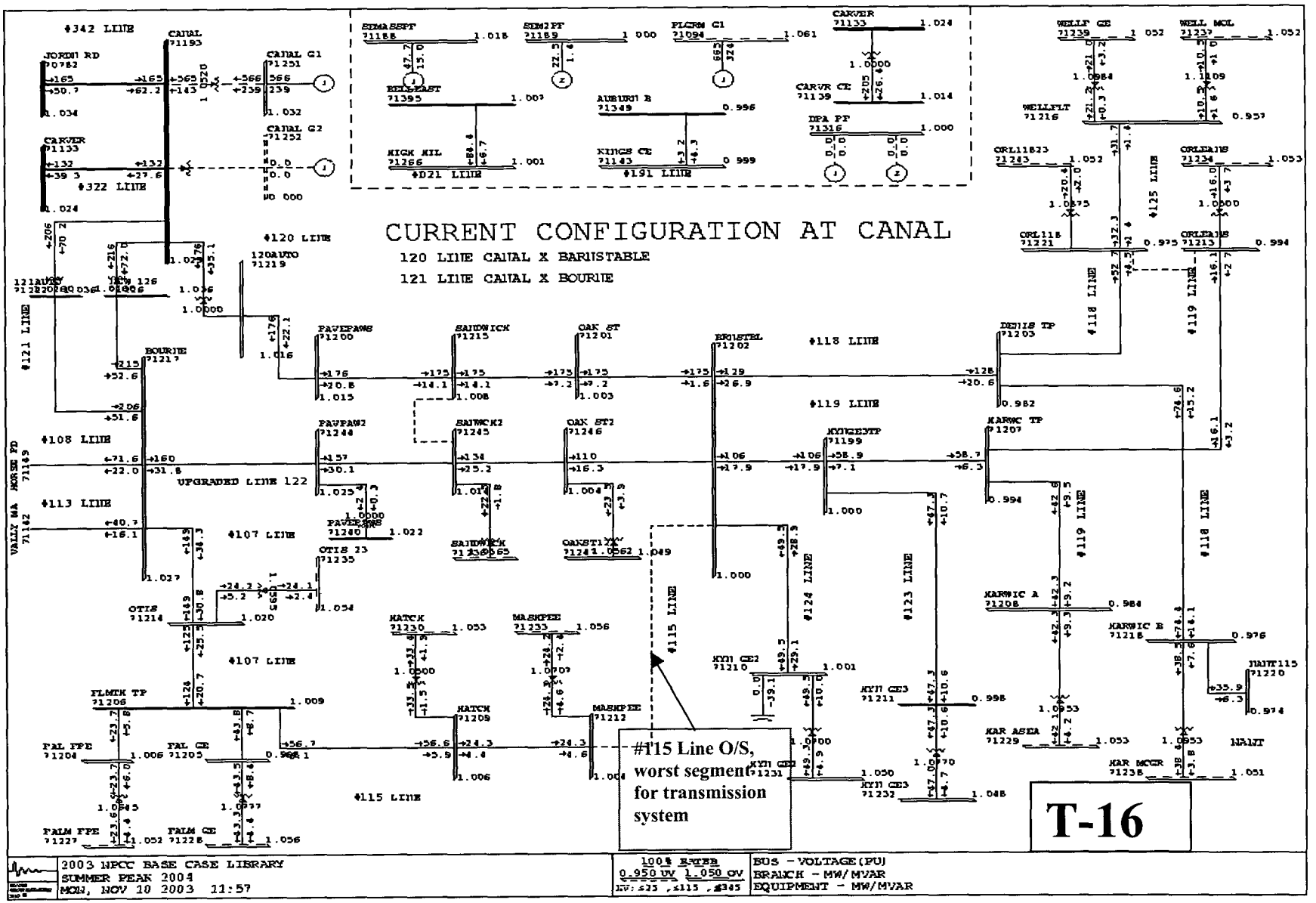
CURRENT CONFIGURATION AT CANAL
120 LINE CANAL X BARNSTABLE
121 LINE CANAL X BOURNE
#115 Line O/S, worst segment for transmission system
T-16
2003 NPCC BASE CASE LIBRARY
SUMMER PEAK 2004
MON, NOV 10 2003 11:57
100% RATER
0.950 UV 1.050 OV
BUS - VOLTAGE (PU)
BRANCH - MW/MVAR
EQUIPMENT - MW/MVAR

2004 T&D OPERATING STUDY

345 & 115kV Transmission Facilities

#116 115KV LINE (CARVER-BROOK ST-W.POND) OUTAGE CONTINGENCY

#116 2338 ACAR 115KV OVERHEAD TRANSMISSION LINE

Overload Ratings:

Summer Normal	239 MVA*
Summer Emergency	254 MVA^
Winter Normal	239 MVA*
Winter Emergency	265 MVA*

* Limit is a C.T. at Brook Street S/S
^ Limit is a Circuit Breaker at Brook Street S/S

The lateral from Brook Street S/S to West Pond is constructed of 795 ACSR conductor, and rated as: (Summer 229/239 MVA, Winter 229/239 MVA).

Action Required:

1. Isolate #116 115kV line, Carver-Brook Street S/S – West Pond 116:

   Open: #252, #652 Circuit Breakers at Carver 115kV Ring Bus.
   #EW42 Circuit Breaker Brook Street Switching Station
   #B11672 Circuit Switcher at West Pond 116

   Close: Nothing

   Transformer outage and load loss results at West Pond 116 Substation. The arrangement of sectionalizing switches at Brook Street does not permit re-energization of the Brook Street – West Pond lateral without lifting 115kV taps, if the faulted section is the Carver-Brook Street backbone. Treat this condition as a West Pond 116 transformer outage, and follow switching sequences previously discussed for this contingency as described at *West Pond Substation #737*.

2. If the Brook Street – West Pond lateral is the faulted section, the Carver-Brook Street backbone can be restored in the following fashion:

   Open: #11647 Switch at Brook Street

   Close: #252, #652 Circuit Breakers at Carver 115kV Ring Bus.
   #EW42 Circuit Breaker Brook Street Switching Station

Results:

After the #116 outage contingency occurs, and load is restored to West Pond (by lifting 115kV taps or closing the 23kV bus tie), system conditions that will prevail appear in **Diagram T-17.**

Violations:

Overloads - See SCADA alarm violations previously discussed for West Pond Transformer outage.

Note: #191 line flow (Auburn Street to Kingston): 147 MVA, 4% over 142 MVA LTE rating. The minor overload can be mitigated by transferring the West Pond #13 line to the Manomet #71 line, and by transferring the West Pond #11 line to the Tremont #81 line.

Voltage - Low voltages (>0.95 per unit) on 115kV system at West Pond, Brook Street, Kingston, Duxbury, Marshfield. 23kV System voltages are acceptable, however.

Additional Actions Required / Recommendations:

Verify 142 MVA LTE limit is appropriate for the Auburn – Kingston #191 line. According to current forecast, and using 142 MVA rating, line is scheduled for thermal upgrade to 795 ACSR conductor by Summer 2006. Loss of the #116 line is the contingency that instigates this thermal deficiency.

Determine need for additional reactive compensation (station capacitor banks) to correct for post-contingency low voltage problems. Results of OP-17 would be useful for this determination.

Investigate installation of new 115kV SCADA-controlled, motor-operated 115kV switch at Brook Street S/S to permit sectionalization of the #116 line such that the Brook Street-W. Pond section could be re-energized without having to lift taps.

PA(

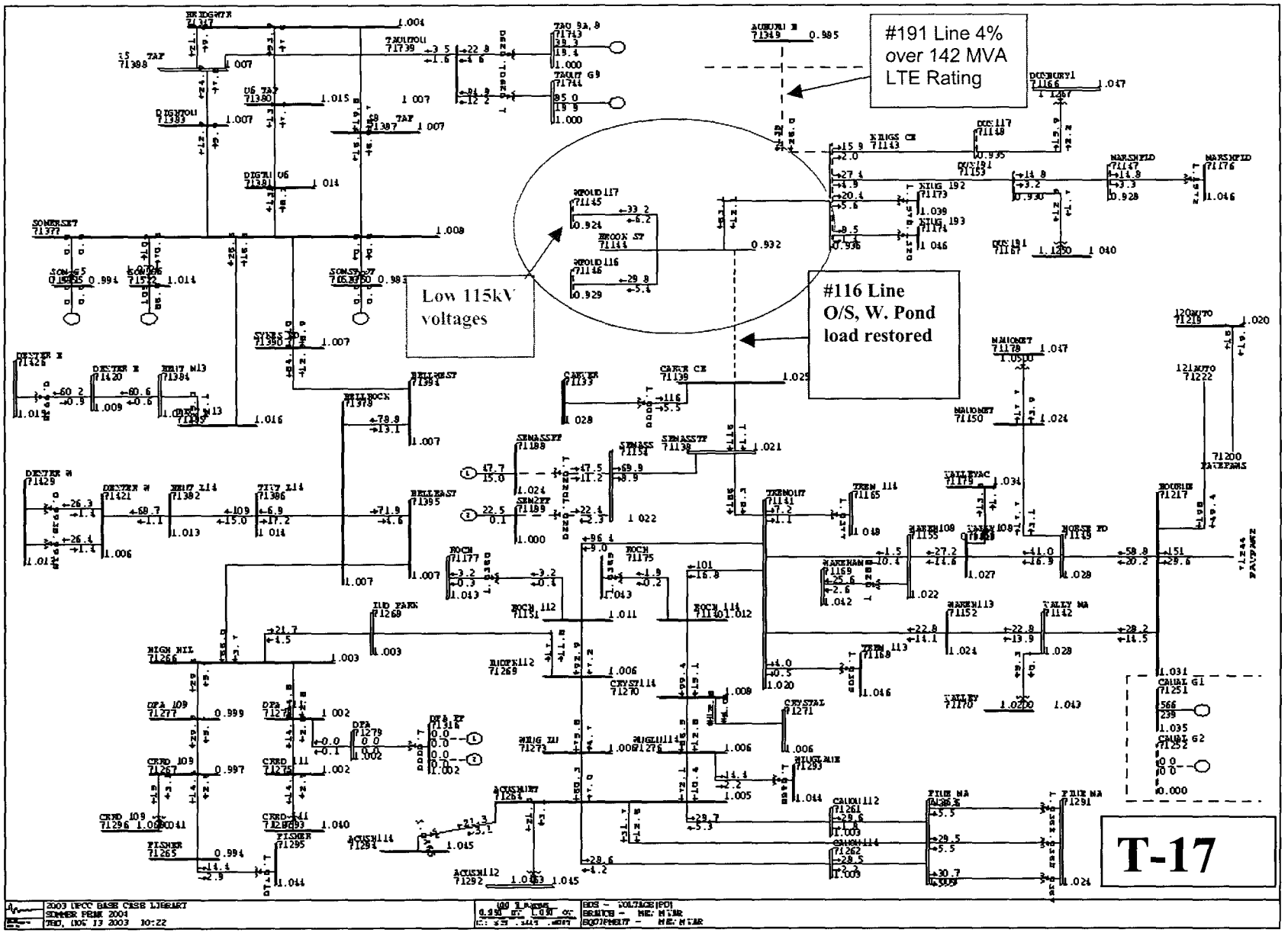
#191 Line 4% over 142 MVA LTE Rating
Low 115kV voltages
#116 Line O/S, W. Pond load restored
T-17

2004 T&D OPERATING STUDY

345 & 115kV Transmission Facilities

#117 115KV LINE (BROOK ST.-KINGSTON-W.POND-DUXBURY) OUTAGE CONTINGENCY

#117 336.4 ACSR 115KV OVERHEAD TRANSMISSION LINE (BROOK ST – KINGSTON)

Overload Ratings:

Summer Normal	124 MVA
Summer Emergency	142 MVA *
Winter Normal	160 MVA
Winter Emergency	171 MVA

*LTE limitation is the 336.4 ACSR line conductor.

Notes: Brook Street–West Pond 117 lateral is 4/0 ACSR (Summer 96/104 MVA, Winter 119/125 MVA).

Kingston–Duxbury 117 lateral is 795 ACSR (Summer 124/158 MVA, Winter 160/176 MVA)

Action Required:

1. Isolate #117 115kV line, Brook Street-West Pond-Kingston-Duxbury:

   Open: #EW42 Circuit Breaker at Brook Street Switching Station
   #19152 Circuit Breaker at Kingston Substation
   #B11772 Circuit Switcher at West Pond 117
   #B11722 Circuit Switcher at Duxbury 117
   #19252 Circuit Switcher at Kingston

   Close: Nothing

   Results in transformer outages at West Pond 117, Kingston 192, and Duxbury 117. The arrangement of sectionalizing switches at Brook Street does not permit re-energization of the Brook Street – West Pond lateral without lifting 115kV taps, if the faulted section is the Brook Street-Kingston Street backbone. Treat this condition as a West Pond 117 transformer outage, and follow switching sequences previously discussed for this contingency as discussed at *West Pond Substation #737.*

2. If the Brook Street – West Pond lateral of the 117 line is the faulted section, the Brook Street-Kingston backbone can be restored in the following fashion:

   Open: #11747 Switch at Brook Street.

   Close: #EW42 Circuit Breaker at Brook Street Switching Station

#19152 Circuit Breaker at Kingston Substation

The Kingston #191 lateral and the Kingston – Duxbury 117 lateral can also be restored in this scenario.

3. If the Kingston – Duxbury 117 lateral is the faulted section, the Brook Street-Kingston backbone can be restored in the following fashion:

Open: #11756 at Kingston

Close: #EW42 Circuit Breaker at Brook Street Switching Station
#19152 Circuit Breaker at Kingston Substation

The Kingston #192 lateral and the Brook Street – West Pond 117 lateral can also be restored in this scenario.

Results:

The worst-case condition for the transmission system, loss of the Brook Street – Kingston 117 line backbone, is shown in **Diagram T-18.**

Violations:

Overloads - None

Voltage - None

Additional Actions Required / Recommendations:

An upgrade of the #117 line to 795 ACSR conductor is proposed for 2005/2006, due to overloads caused by the addition of a new 115kV circuit breaker at National Grid's Auburn Street Substation. The upgrade of this line will not change the post-contingency outage performance discussed here.

As for the #116 line outage previously discussed, investigate installation of new 115kV SCADA-controlled, motor-operated 115kV switch at Brook Street S/S to permit sectionalization of the #117 line such that the Brook Street-W. Pond section could be re-energized without having to lift taps.

P/

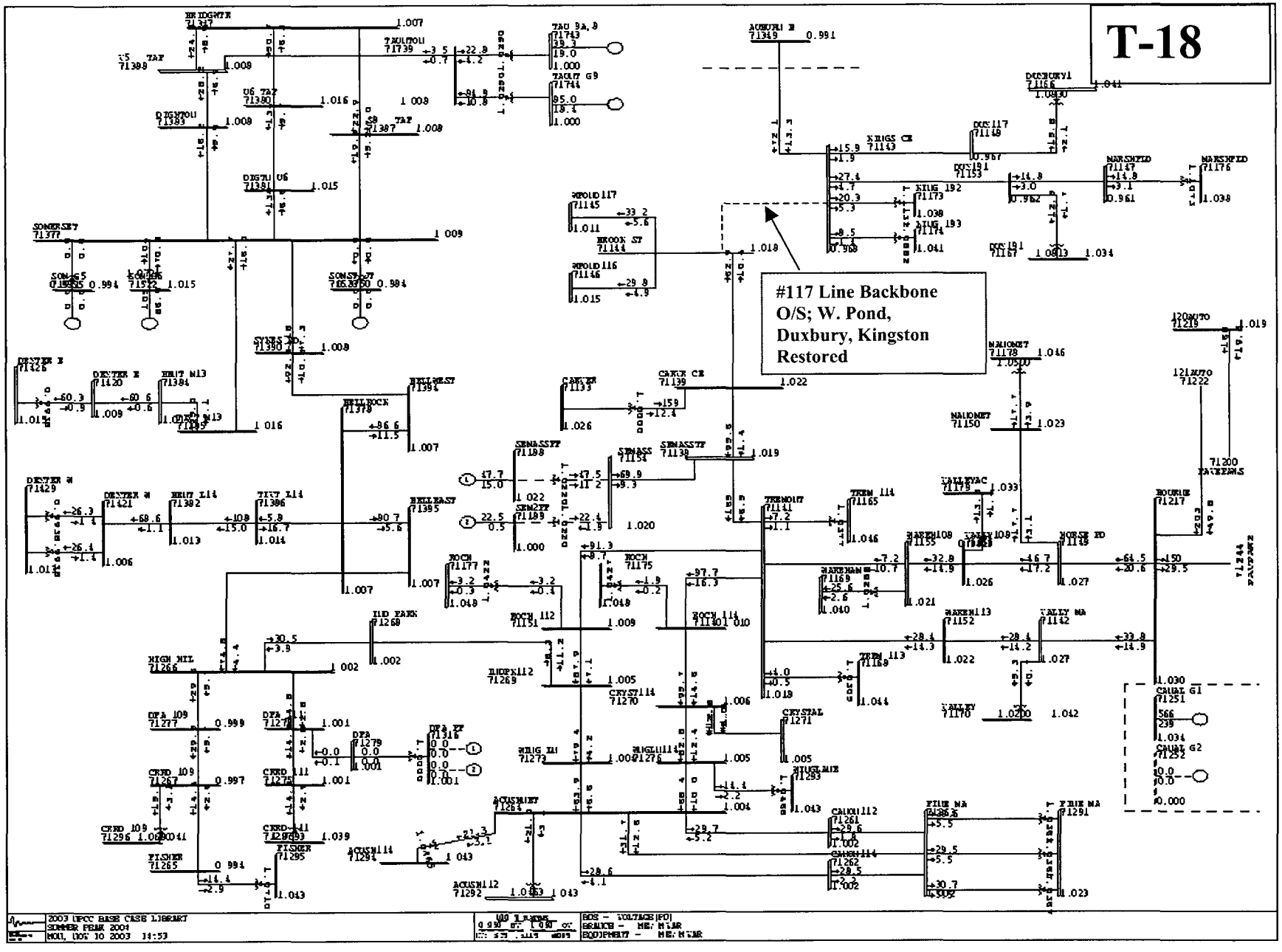
T-18
#117 Line Backbone O/S; W. Pond, Duxbury, Kingston Restored
2003 UPCC BASE CASE LIBRARY
SUMMER PEAK 2004
MON, NOV 10 2003 14:53

2004 T&D OPERATING STUDY

345 & 115kV Transmission Facilities

#118 115KV LINE (BARNSTABLE S/S-HARWICH TAP-HARWICH-ORLEANS) OUTAGE CONTINGENCY

*#118 795 ACSR 115KV OVERHEAD TRANSMISSION LINE**

*Double-Circuit Tower with #119 Line, from Mary Dunn Rd. to Harwich Tap. Double-circuit tower outage dumps lower Cape and Nantucket Electric.

Overload Ratings:

Summer Normal	227 MVA
Summer Emergency	246 MVA
Winter Normal	284 MVA
Winter Emergency	297 MVA

All limits are posed by 795 ACSR phase conductor.
Line from Harwich Tap to Orleans is a 795 ACSR single-circuit tower line of same rating.
Line from Harwich Tap to Harwich is 795 ACSR a single circuit tower line with the following ratings: (Summer 234/253 MVA, Winter 292/306 MVA).

Action Required:

1. Isolate #118 115kV line, Barnstable S/S to Harwich Tap to Harwich to Orleans:

   Open: #282 and #382 Circuit Breakers at Barnstable S/S Ring Bus
   #11873 Circuit Switcher at Harwich
   #11849 Switch at Orleans

   Close: T1-118-119 at Orleans (transfers #125 line to #119 line to restore Wellfleet).

   One transformer each out at Harwich and Orleans.

2. Restore loads at Harwich and Orleans:

   Close: Bus Tie Breaker #T3-E-W (transfers Harwich load to #119 transformer)
   Bus Tie Breaker #T1-52 (transfers Orleans load to Orleans 119 transformer)

3. Isolate faulted section:

   If Harwich Tap – Orleans faulted, **OPEN** 11835 at Harwich Tap, and Orleans #118 transformer can be restored by closing Circuit Switcher #1143.

If Barnstable – Harwich Tap faulted, entire line is out until repairs are completed.

Results:

After all switching is complete, and assuming "worst case" of a faulted section between Barnstable and Harwich Tap, see **Diagram T-19**.

Violations:

Overloads - None on transmission system

Voltage - None on transmission system.

Additional Actions Required / Recommendations:

For post-contingency conditions where loads are restored to one transformer at both Harwich and Orleans, refer to contingency outages of those transformers, covered at *Harwich Substation #968* and *Orleans Substation #975.*

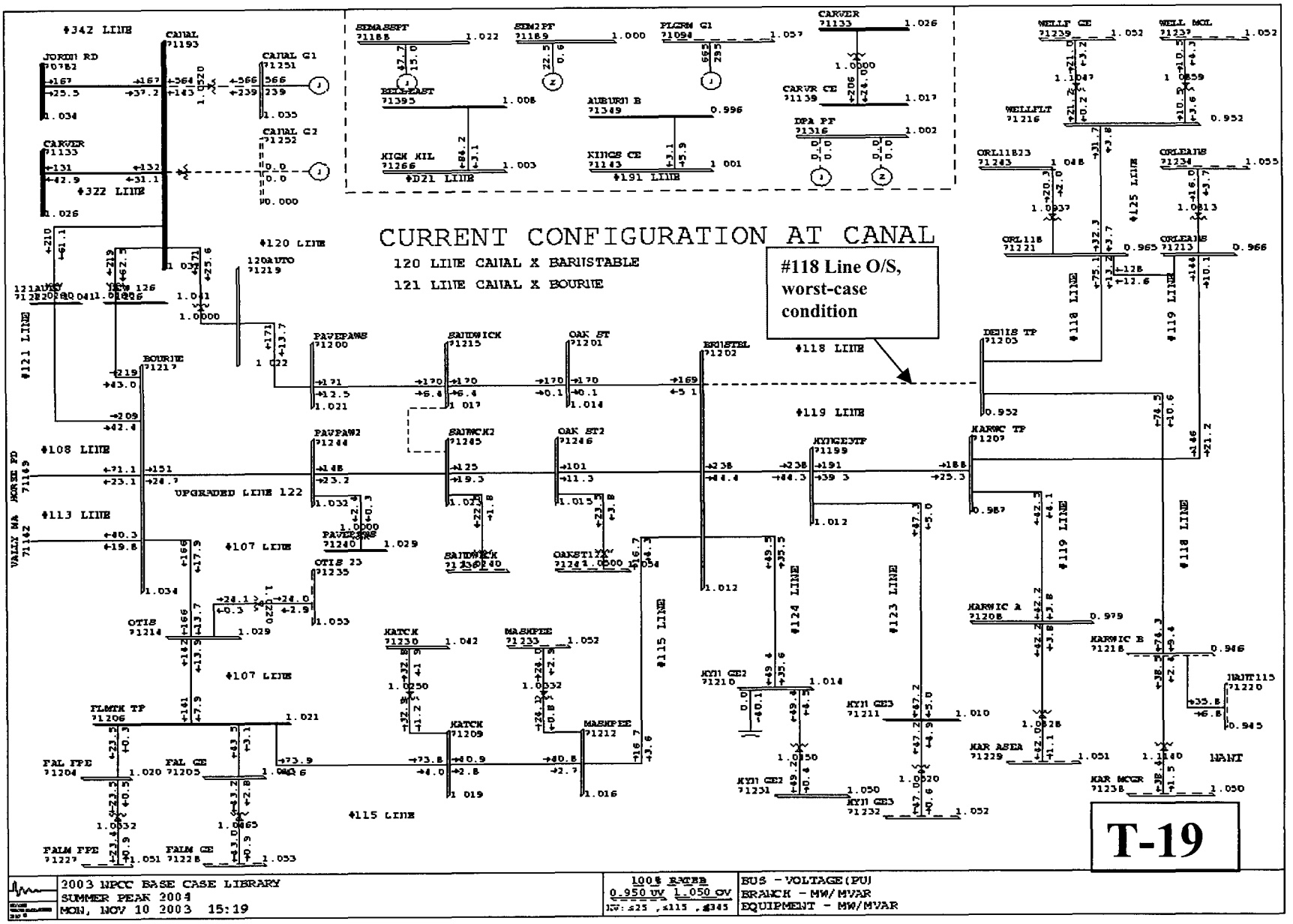
CURRENT CONFIGURATION AT CANAL
120 LINE CANAL X BARNSTABLE
121 LINE CANAL X BOURNE
#118 Line O/S, worst-case condition
#342 LINE
#322 LINE
#120 LINE
#121 LINE
#108 LINE
#113 LINE
#107 LINE
#115 LINE
#118 LINE
#119 LINE
#124 LINE
#123 LINE
UPGRADED LINE 122
T-19
2003 NPCC BASE CASE LIBRARY
SUMMER PEAK 2004
MON, NOV 10 2003 15:19
100% RATEB
0.950 UV 1.050 OV
BUS - VOLTAGE(PU)
BRANCH - MW/MVAR
EQUIPMENT - MW/MVAR

2004 T&D OPERATING STUDY

345 & 115kV Transmission Facilities

#119 115KV LINE (BARNSTABLE S/S-HARWICH TAP-HARWICH-ORLEANS) OUTAGE CONTINGENCY

#119 795 ACSR 115KV OVERHEAD TRANSMISSION LINE

*Double-Circuit Tower with #119 Line, from Mary Dunn Rd. to Harwich Tap. Double-circuit tower outage dumps lower Cape and Nantucket Electric.

Overload Ratings:

Summer Normal	227 MVA
Summer Emergency	246 MVA
Winter Normal	284 MVA
Winter Emergency	297 MVA

All limits are posed by 795 ACSR phase conductor.
Line from Harwich Tap to Orleans is a 795 ACSR single-circuit tower line of same rating.
Line from Harwich Tap to Harwich is 4/0 ACSR a single circuit tower line with the following ratings: (Summer 96/104 MVA, Winter 119/125 MVA).

Actions Required:

1. Isolate #119 115kV line, Barnstable S/S to Harwich Tap to Harwich to Orleans:

   Open: #582 and #682 Circuit Breakers at Barnstable S/S Ring Bus
   #11928 Circuit Switcher, Hyannis GE#1 Tap
   #11972 Circuit Switcher at Harwich
   #11943 Circuit Switcher at Orleans
   #12343 Circuit Switcher at Hyannis GE#1 station

   One transformer each out at Hyannis, Harwich and Orleans.

4. Shoot Line between Barnstable and Harwich Tap to verify if unfaulted section. If not faulted section, restore Hyannis #123 transformer:

   Open: #11928 Circuit Switcher (verify open)

   Close: #12343 Circuit Switcher at Hyannis GE#1.

4A. If #123 line between Hyannis #123 transformer and the tap is the faulted section, or the section of the #119 line between Barnstable S/S and Hyannis #123 Line tap is faulted:

Open: #11928 Circuit Switcher (verify open)

Close: #T1-118-119 Tie Switch at Orleans
#11943 Circuit Switcher at Orleans (restores transformer)
#11973 Circuit Switcher at Harwich (restores transformer)
#T1-E-W 23kV bus tie breaker at Hyannis (restores load to GE#2 transformer)*

*Then, follow load-relief switching for loss of Hyannis #123 transformer as previously documented at *Hyannis Junction Substation #961.*

5. If Hyannis GE Tap to Harwich is faulted section or Harwich Tap to Harwich is faulted section,

Open: #11928 Circuit Switcher (verify open)
#11937 Switch at Harwich Tap
#11973 Circuit Switcher at Harwich (verify open)

Close: #T3-E-W 23kV bus tie at Harwich (transfer load to #118 bank)*

*Similar to loss of Harwich #119 bank, previously discussed at *Harwich Substation #968.*

Restore Nantucket Electric to service by transferring to #118 line:

Open: #11893 at Lothrop Ave.
Close: #11993 at Lothrop Ave.

6. If Harwich Tap to Orleans is faulted section,

Open: #11937 at Harwich Tap
#T1-118-119 at Orleans (verify open)

Close: #T1-52 23kV bus tie breaker at Orleans (transfer load to #118 bank)*

*Similar to loss of Orleans #119 bank, previously discussed at *Orleans Substation #975.*

Results:

If the faulted section of the #119 line is between Barnstable Switching Station #958 and the #123 Line tap for Hyannis Junction Substation #961, the #118 line will see a post-contingency flow of 249 MVA, 1% over the 246 MVA LTE rating for 795 ACSR conductor. See **Diagram #T-20.** Load transfers from Hyannis Junction Substation #958 to Oak Street Substation #920 would be required to reduce loading on the #118 line. The length of this section of the #119 line is only 0.04 miles (210 feet) versus 7.2 miles for the section from the #123 Line tap to Harwich Tap, making an outage of this segment a low probability event versus the rest of the line.

If the faulted section of the #119 line is between the #123 Line tap and Harwich Tap Switching Station # 963, no transmission system overloads assuming worst-case segment out of service, as shown in **Diagram T-21.**

Violations:

Overloads	-	1% beyond LTE rating on #118 Line for loss of Barnstable S/S to #123 Line Tap section of #119 Line. Based upon marginal overload for loss of very short line sections, and due to the fact that loads can be transferred via the 23kV system to reduce the loading, this is a manageable condition No overloads for loss of any other portion of the #119 line.;
Voltage	-	None on transmission system.

Additional Actions Required / Recommendations:

None. Consult transformer outage contingencies for Hyannis, Harwich, and Orleans for individual switching plans for force outage of each transformer caused by #118 / #119 line outages.

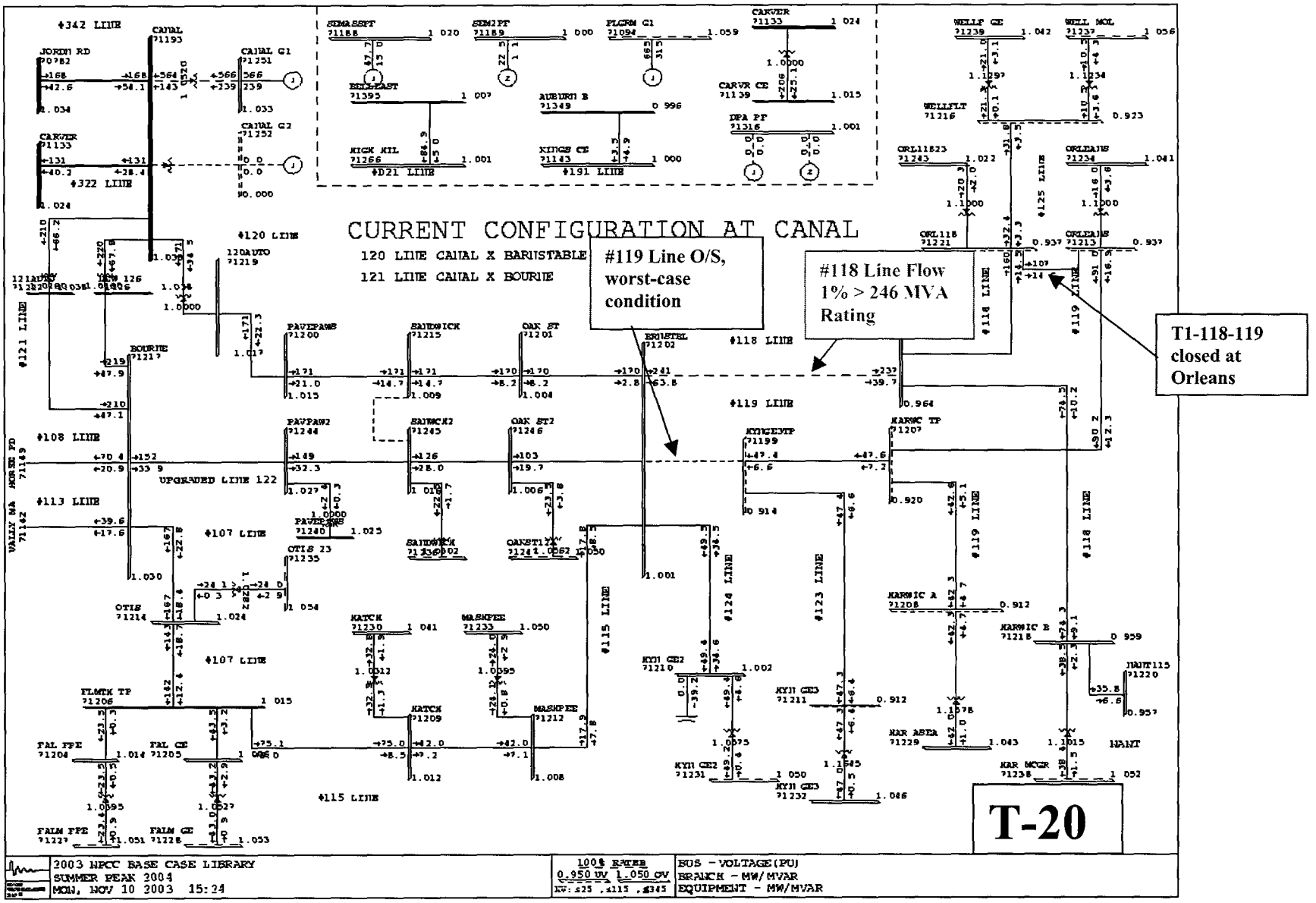
CURRENT CONFIGURATION AT CANAL
120 LINE CANAL X BARNSTABLE
121 LINE CANAL X BOURNE
#119 Line O/S, worst-case condition
#118 Line Flow 1% > 246 MVA Rating
T1-118-119 closed at Orleans
T-20
2003 NPCC BASE CASE LIBRARY
SUMMER PEAK 2004
MON, NOV 10 2003 15:24
100% RATED
0.950 UV 1.050 OV
BUS - VOLTAGE(PU)
BRANCH - MW/MVAR
EQUIPMENT - MW/MVAR

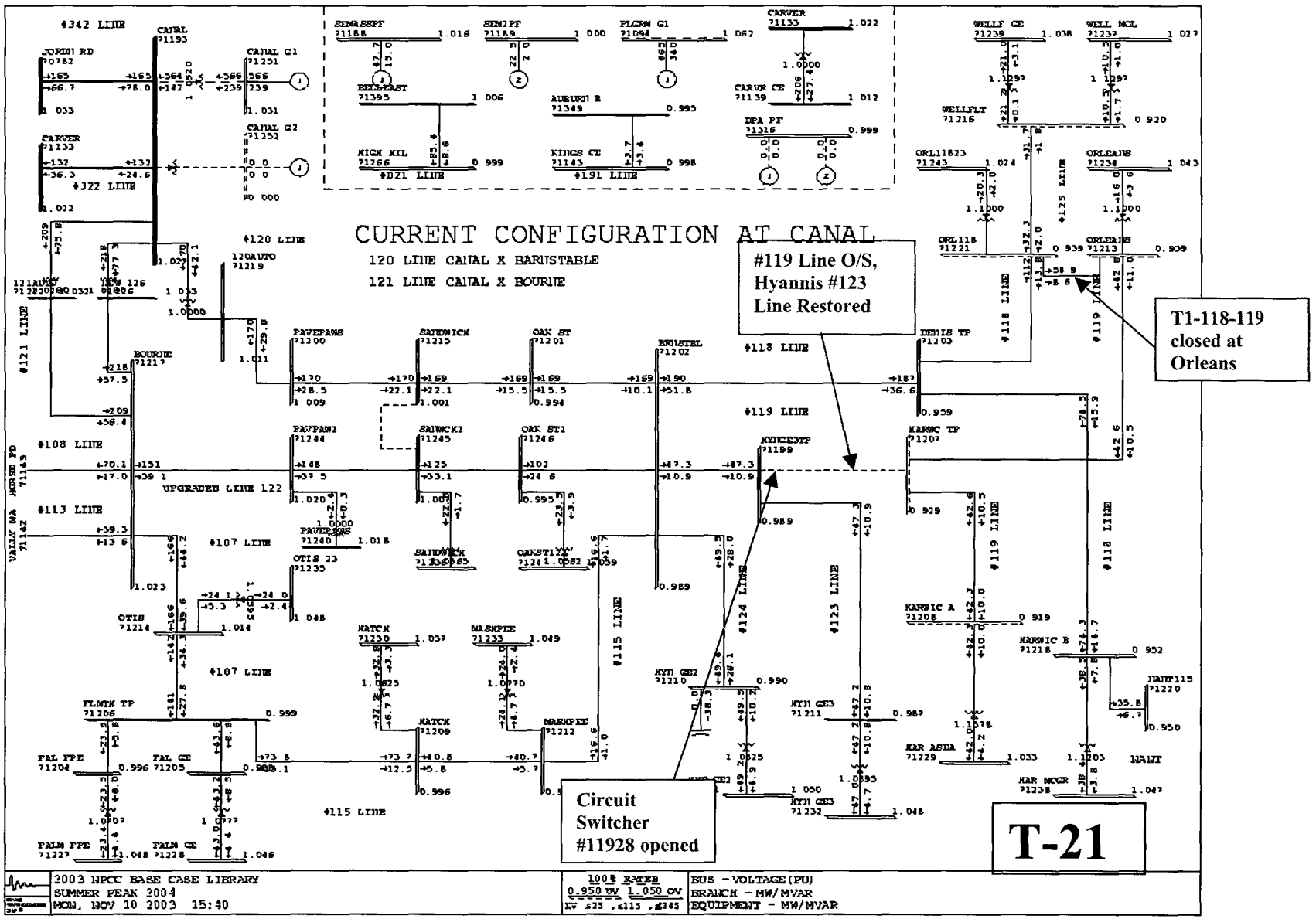
CURRENT CONFIGURATION AT CANAL
120 LINE CANAL X BARNSTABLE
121 LINE CANAL X BOURNE
#119 Line O/S, Hyannis #123 Line Restored
T1-118-119 closed at Orleans
Circuit Switcher #11928 opened
T-21
UPGRADED LINE 122
2003 NPCC BASE CASE LIBRARY
SUMMER PEAK 2004
MON, NOV 10 2003 15:40
BUS - VOLTAGE (PU)
BRANCH - MW/MVAR
EQUIPMENT - MW/MVAR

2004 T&D OPERATING STUDY

345 & 115kV Transmission Facilities

#120 115KV LINE (CANAL-BARNSTABLE S/S) OUTAGE CONTINGENCY

#120 2-1703 ACAR 115KV OVERHEAD TRANSMISSION LINE AND 240/320/400 [448] MVA AUTOTRANSFORMER*

*Double-circuit tower construction with #342 line for 2.5 miles from Canal S/S to Bourne S/S.
**Double-circuit tower construction with #122 line for 3.8 miles from Shoot Flying Hill Rd. to Barnstable S/S. Final 3.8 miles of line constructed of 2338 ACAR conductor.

Overload Ratings:

Summer Normal	398 MVA*
Summer Emergency	422 MVA*
Winter Normal	398 MVA*
Winter Emergency	422 MVA*

Limiting elements are bushing CT's and circuit breakers at both Canal and Barnstable ring busses. A verification of whether these are RING OPEN or RING CLOSED ratings needs to be obtained. It is assumed here that these are OPEN RING ratings, and the higher autotransformer ratings listed below will govern:

Ratings for #120 autotransformer are (Summer 450/470 MVA, Winter 515/555 MVA), as listed in ISO-NE NX-9 database.

Action Required:

1. Isolate #120 autotransformer and 115kV line, Canal to Barnstable:

   Open: #712P/712S and #812P/812S 345kV breakers at Canal Ring Bus
   #482 and #582 breakers at Barnstable Ring Bus.
   Disconnect Switch #B12017

   Close: #712P/712S and #812P/812S 345kV breakers at Canal Ring Bus to restore closed ring.

   All capacitor banks on Cape District, including all 23kV 4.8 MVAR station banks, and the 40 MVAR 115kV bank at Hyannis Junction Substation #968.

Results:

Post contingency, the #121 and #126 Canal to Bourne autotransformers, the Carver autotransformer, and the #D21 / #191 tie lines pick up system load. No thermal or voltage violations (see **Diagram #T-22**).

Violations:

Overloads	-	None
Voltage	-	None

Additional Actions Required / Recommendations:

A project has been completed to expand the Canal 345kV ring bus to permit the installation of a third (3rd) 345/115kV autotransformer and a second (2nd) 115kV transmission line to Bourne Switching Station #917.

Post-contingency overloads of the #121 autotransformer for a contingency outage of the #120 line or autotransformer will not occur at forecasted Summer 2004 peak load levels.

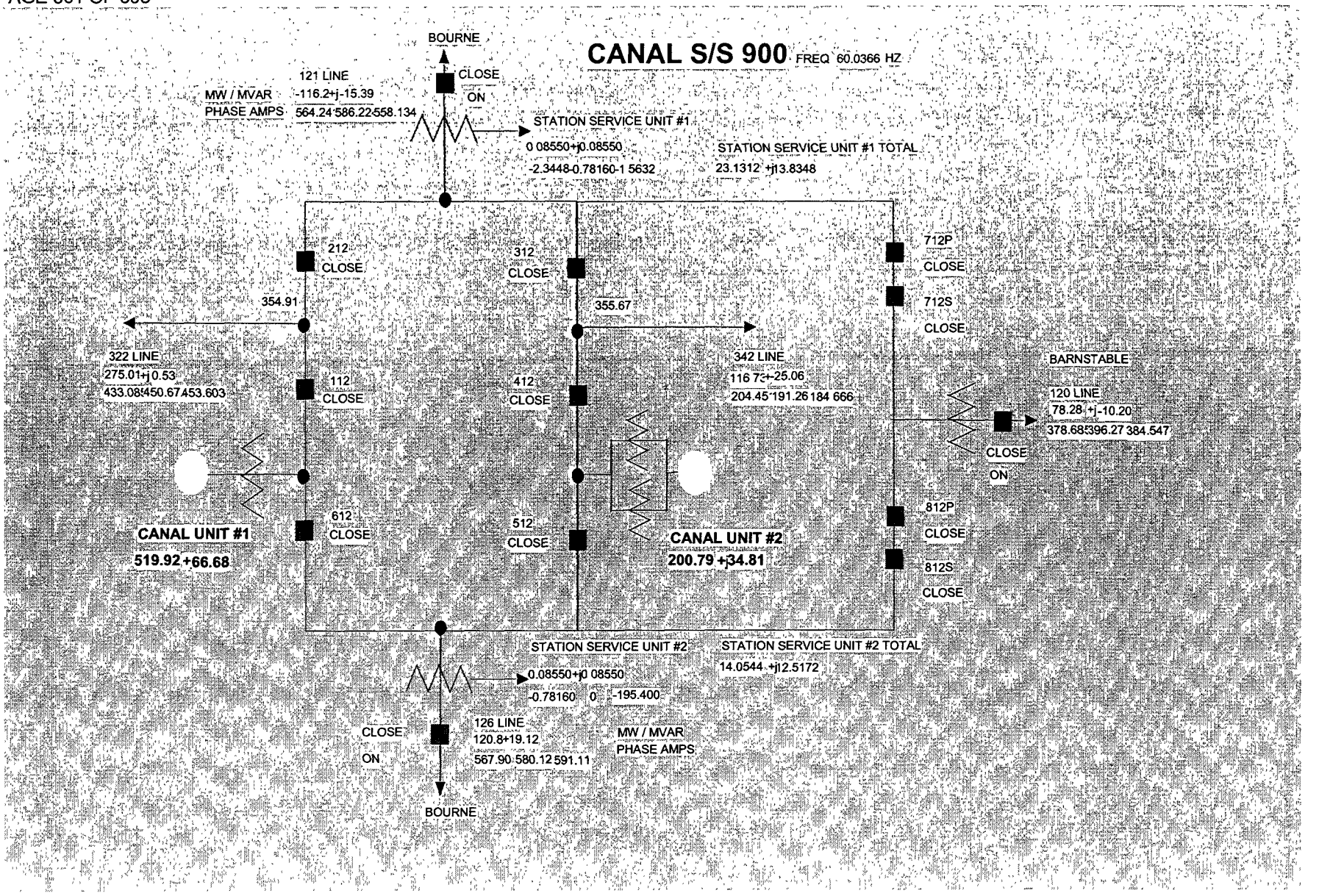
CANAL S/S 900
FREQ 60.0366 HZ
BOURNE
121 LINE
MW / MVAR -116.2+j-15.39
PHASE AMPS 564.24 586.22 558.134
CLOSE
ON
STATION SERVICE UNIT #1
0 08550+j0.08550
-2.3448-0.78160-1 5632
STATION SERVICE UNIT #1 TOTAL
23.1312 +j13.8348
212
CLOSE
312
CLOSE
712P
CLOSE
712S
CLOSE
354.91
355.67
322 LINE
275.01+j0.53
433.08 450.67 453.603
342 LINE
116 7 +-25.06
204.45 191.26 184 666
BARNSTABLE
120 LINE
78.28 +j-10.20
378.68 396.27 384.547
112
CLOSE
412
CLOSE
CLOSE
ON
612
CLOSE
512
CLOSE
812P
CLOSE
812S
CLOSE
CANAL UNIT #1
519.92 +66.68
CANAL UNIT #2
200.79 +j34.81
STATION SERVICE UNIT #2
0.08550+j0 08550
-0.78160 0 -195.400
STATION SERVICE UNIT #2 TOTAL
14.0544 +j12.5172
CLOSE
ON
126 LINE
120.8+19.12
567.90 580.12 591.11
MW / MVAR
PHASE AMPS
BOURNE

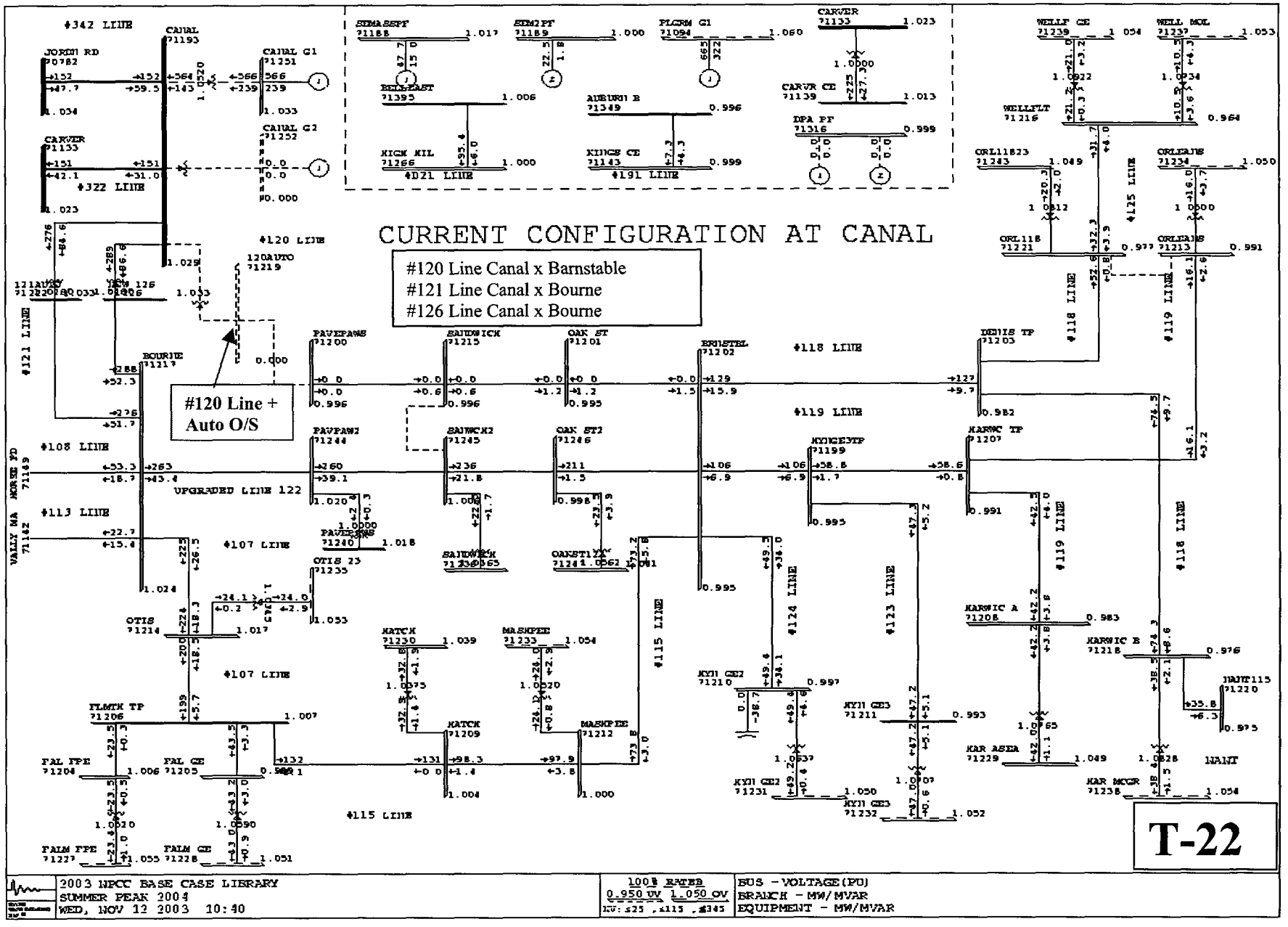
CURRENT CONFIGURATION AT CANAL
#120 Line Canal x Barnstable
#121 Line Canal x Bourne
#126 Line Canal x Bourne
#120 Line + Auto O/S
T-22
2003 NPCC BASE CASE LIBRARY
SUMMER PEAK 2004
WED, NOV 12 2003 10:40
100% RATED
0.950 UV 1.050 OV
BUS - VOLTAGE(PU)
BRANCH - MW/MVAR
EQUIPMENT - MW/MVAR

2004 T&D OPERATING STUDY

345 & 115kV Transmission Facilities

#121 115KV LINE (CANAL-BOURNE) OUTAGE CONTINGENCY

#121 2338 ACAR 115KV OVERHEAD TRANSMISSION LINE AND 400 MVA AUTOTRANSFORMER

Overload Ratings:

Summer Normal	402 MVA
Summer Emergency	463 MVA
Winter Normal	449 MVA
Winter Emergency	517 MVA

The limiting element is the wave trap at Canal in all cases.

Transformer: Summer (427 MVA normal / 462 MVA LTE), Winter (537 MVA normal / 563 MVA LTE)

Action Required:

1. Isolate #121 autotransformer and 115kV line, Canal to Bourne:

   Open: #212, #312, #712P Circuit Breakers at Canal Ring Bus.
   #12172 Circuit Breaker at Bourne S/S.
   Disconnect Switch #B12117
   Station Service Breaker #B1S12

   Close: #212, #312, #712P Circuit Breakers at Canal Ring Bus to restore closed ring.

Results:

After all switching is complete, no thermal or voltage violations, see **Diagrams T-23.**

Violations:

Overloads - None

Voltage - Minor voltage violation at 115kV side of Wellfleet Substation #9746 (0.94 per unit), not problematic at 23kV side of station.

Additional Actions Required / Recommendations:

None

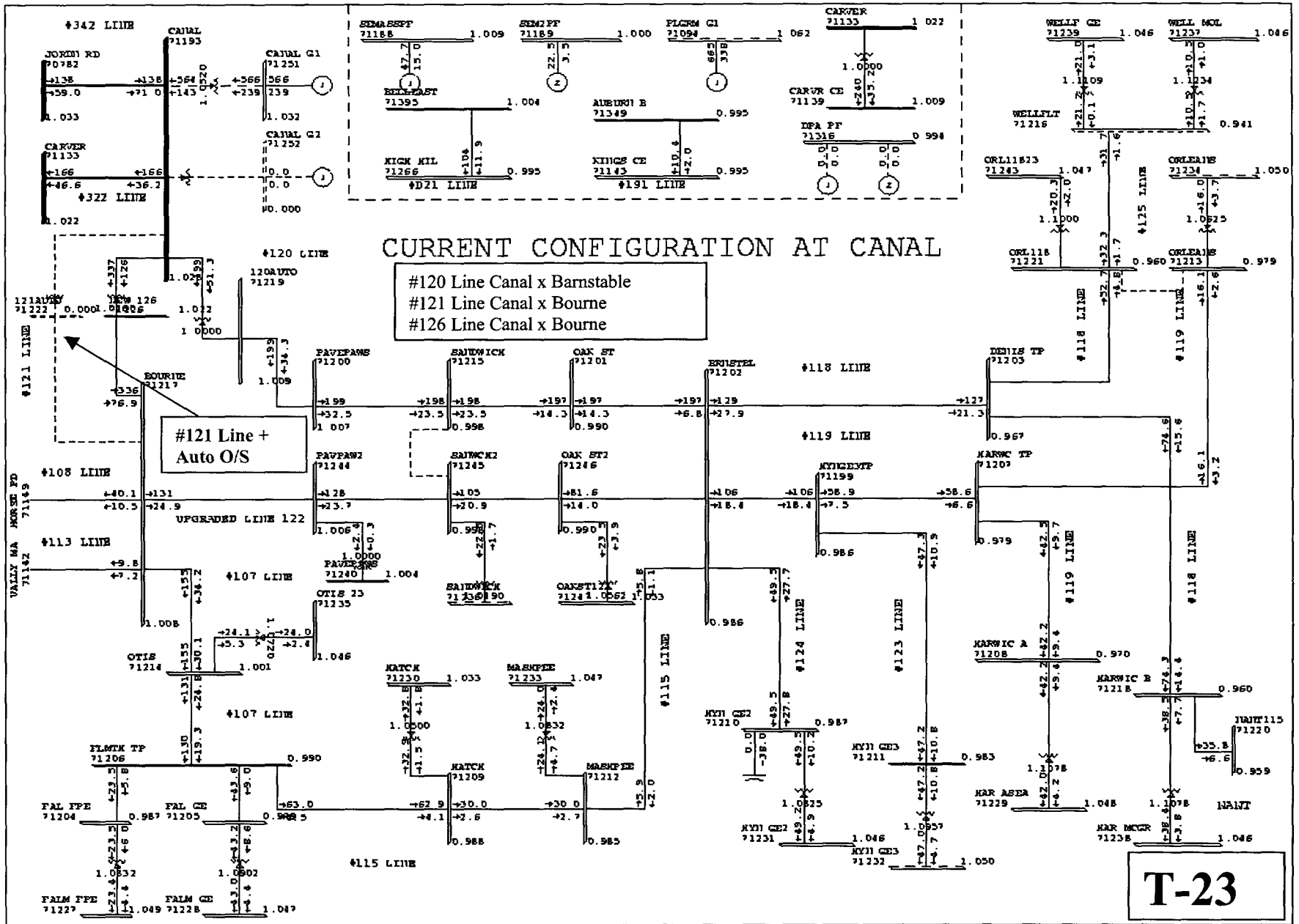
CURRENT CONFIGURATION AT CANAL
#120 Line Canal x Barnstable
#121 Line Canal x Bourne
#126 Line Canal x Bourne
#121 Line + Auto O/S
T-23
2003 NPCC BASE CASE LIBRARY
SUMMER PEAK 2004
WED, NOV 12 2003 11:12
100% RATED
0.950 UV 1.050 OV
BUS - VOLTAGE(PU)
BRANCH - MW/MVAR
EQUIPMENT - MW/MVAR

2004 T&D OPERATING STUDY

345 & 115kV Transmission Facilities

#122 115KV LINE (BOURNE-PAVE PAWS-SANDWICH-OAK ST.-BARNSTABLE S/S) OUTAGE CONTINGENCY*

*#122 2338 ACAR 115KV OVERHEAD TRANSMISSION LINE***

**Double-circuit tower with #120 line from Shoot Flying Hill Rd. to Barnstable S/S

Overload Ratings:

Summer Normal	345 MVA*
Summer Emergency	383 MVA*
Winter Normal	345 MVA*
Winter Emergency	383 MVA*

Limit is a bushing CT at Bourne. Conductor is otherwise rated at: (Summer 413/465 MVA, Winter 533/563 MVA).

Action Required:

1. Isolate #122 115kV line, Bourne-Pave Paws-Sandwich-Oak Street-Barnstable S/S:

   Open: #12272 Circuit Breaker at Bourne Switching Station
   #182, #282 Circuit Breakers at Barnstable Ring Bus.
   #12223 Circuit Switcher at PAVE PAWS **
   #12213 Circuit Switcher at Sandwich***
   #12233 Circuit Switcher at Oak Street***

   Close: Nothing

   ** PAVE PAWS (*PAVE P*hased *A*rray *W*arning *S*ystem) radar load can be restored via 23kV DSS system onto the Otis #81 line, or by government-owned generation which can carry this load.

   ***Restore Sandwich load to Otis and Oak Street to Hyannis by following switching for Sandwich Substation #916 and Oak Street Substation #920. Load shedding may be required, as simultaneous outages of both substation transformers cannot be supported.

Isolation of faulted section and restoration of station load at PAVE PAWS, Sandwich, and Oak Street:

A. If section from Bourne Switching Station to PAVE PAWS is faulted, restore remainder as follows:

Open: #12226 Switch at PAVE PAWS
Check open: 12272 breaker at Bourne

Close: #182, #282 Circuit Breakers at Barnstable Ring Bus.
#12223 Circuit Switcher at PAVE PAWS
#12213 Circuit Switcher at Sandwich
#12233 Circuit Switcher at Oak Street

Outage of this section is the worst-case condition for the transmission system, and is illustrated in **Diagram #T-24**.

B. If section from PAVE PAWS to Sandwich is faulted, restore remainder as follows:

Open: #12229 Switch at PAVE PAWS
#12216 Switch at Sandwich

Close: 12272 Circuit Breaker at Bourne
#182, #282 Circuit Breakers at Barnstable Ring Bus.
#12223 Circuit Switcher at PAVE PAWS
#12213 Circuit Switcher at Sandwich
#12233 Circuit Switcher at Oak Street

C. If section from Sandwich to Oak Street is faulted, restore remainder as follows:

Open: #12218 Switch at Sandwich
#12236 Switch at Oak Street

Close: 12272 Circuit Breaker at Bourne
#182, #282 Circuit Breakers at Barnstable Ring Bus.
#12223 Circuit Switcher at PAVE PAWS
#12213 Circuit Switcher at Sandwich
#12233 Circuit Switcher at Oak Street

D. If section from Oak Street to Barnstable S/S is faulted, restore remainder as follows:

Open: #12239 Switch at Oak Street
#12285 Switch at Barnstable S/S

Close: 12272 Circuit Breaker at Bourne
#182, #282 Circuit Breakers at Barnstable Ring Bus (to restore closed ring)
#12223 Circuit Switcher at PAVE PAWS

#12213 Circuit Switcher at Sandwich
#12233 Circuit Switcher at Oak Street

Results:

After all switching is complete, no thermal or violation violations, **Diagram T-24**.

Violations:

Overloads - None

Voltage - None

Additional Actions Required / Recommendations:

None.

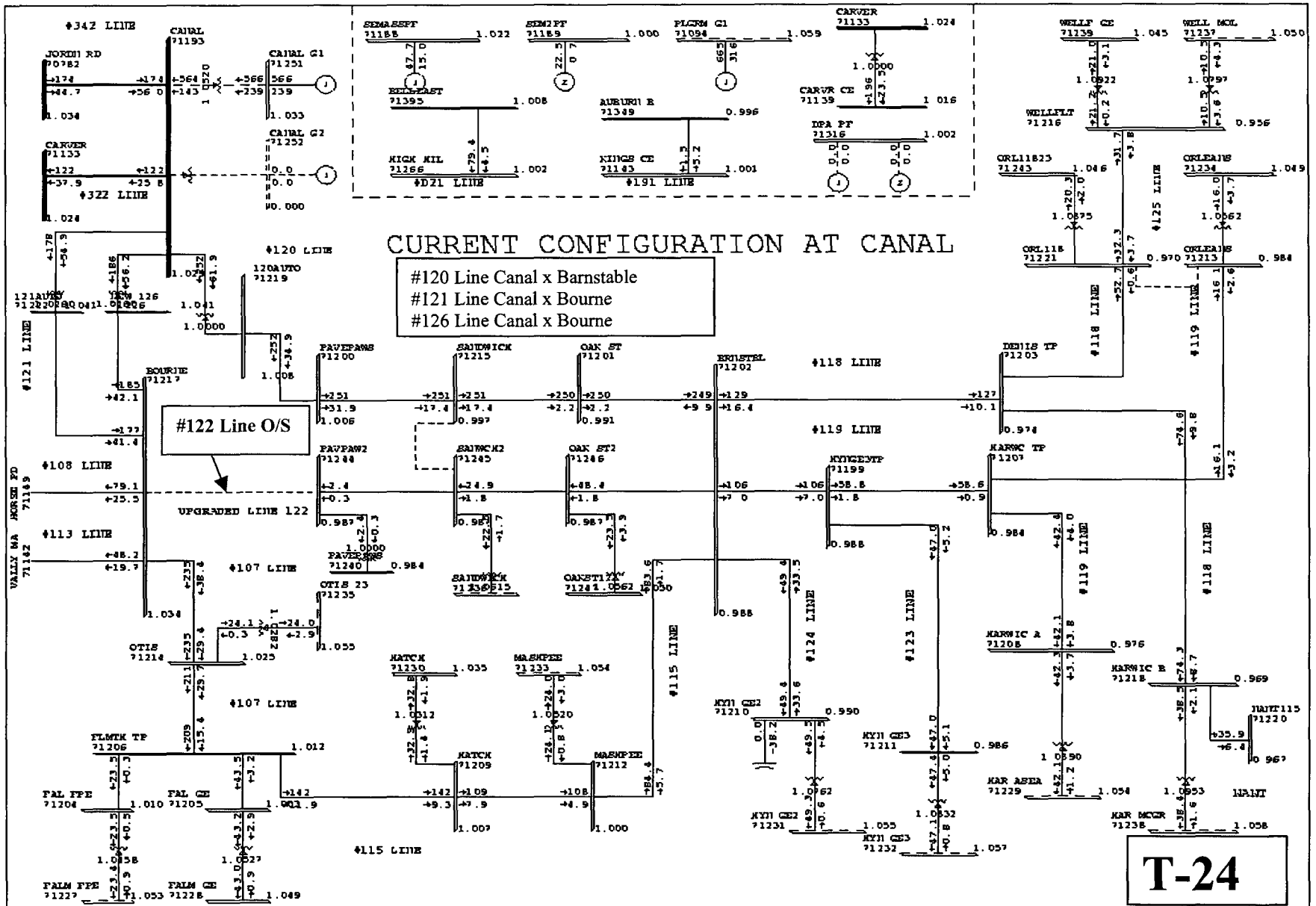
CURRENT CONFIGURATION AT CANAL
#120 Line Canal x Barnstable
#121 Line Canal x Bourne
#126 Line Canal x Bourne
#122 Line O/S
UPGRADED LINE 122
T-24
2003 NPCC BASE CASE LIBRARY
SUMMER PEAK 2004
WED, NOV 12 2003 11:21
100% RATEB
0.950 UV 1.050 OV
BUS - VOLTAGE(PU)
BRANCH - MW/MVAR
EQUIPMENT - MW/MVAR

2004 T&D OPERATING STUDY

345 & 115kV Transmission Facilities

#123 115KV LINE (BARNSTABLE S/S-HYANNIS GE#1) OUTAGE CONTINGENCY

#123 4/0 ACSR 115KV OVERHEAD TRANSMISSION LINE

Overload Ratings:

Summer Normal	96 MVA
Summer Emergency	104 MVA
Winter Normal	119 MVA
Winter Emergency	125 MVA

Action Required:

A sudden trip of the #123 line, a lateral of the #119 line, will manifest itself as a trip of the #119 line. Follow #119 line switching procedures until it is ascertained that the #123 lateral is the faulted element.

1. Isolate #123 115kV line, Hyannis GE#1 tap to Hyannis GE#1 station:

   Open: #12328 Switch at Hyannis #123 Tap
   #12343 Circuit Switcher at Hyannis Junction Station.

   Close: Nothing

   *Identical to an outage of the Hyannis #123 transformer. Follow the switching procedures previously documented for this transformer described at *Hyannis Junction Substation #961*.

Results:

After all switching is complete, no transmission system thermal or voltage violations. Results identical to Hyannis #123 transformer outage, so no diagram provided here. Please refer to Hyannis Junction Substation #961 for post contingency performance of #123 transformer outage.

Violations:

Overloads	-	None on transmission system.
Voltage	-	None on transmission system.

Additional Actions Required / Recommendations:

Investigate running the #123 line into a spare breaker position at the Barnstable ring to remedy loss this lateral for a #119 line contingency.

2004 T&D OPERATING STUDY

345 & 115kV Transmission Facilities

#124 115KV LINE (BARNSTABLE S/S-HYANNIS GE#2) OUTAGE CONTINGENCY

#124 795 ACSR 115KV OVERHEAD TRANSMISSION LINE

Overload Ratings:

Summer Normal	227 MVA
Summer Emergency	246 MVA
Winter Normal	284 MVA
Winter Emergency	297 MVA

Action Required:

1. Isolate #124 115kV line, Barnstable Ring bus to Hyannis Junction.

   Open: #682, #382 Circuit Breakers at Barnstable Ring Bus.
   #12443 Circuit Switcher at Hyannis Junction

   Close: Nothing

   *Identical to an outage of the Hyannis #124 transformer. Follow the switching procedures previously documented for this transformer described at *Hyannis Junction Substation #961*.

Results:

After all switching is complete, no transmission system thermal or voltage violations. Results similar to Hyannis #124 transformer outage, so no diagram provided here. Please refer to Hyannis Junction Substation #961 for post contingency performance of #124 transformer outage.

Violations:

Overloads	-	None on transmission system.
Voltage	-	None on transmission system.

Additional Actions Required / Recommendations:

None.

2004 T&D OPERATING STUDY

345 & 115kV Transmission Facilities

#125 115KV LINE (ORLEANS-WELLFLEET) OUTAGE CONTINGENCY

#125 4/0 AAAC 115KV OVERHEAD TRANSMISSION LINE

Overload Ratings:

Summer Normal	96 MVA
Summer Emergency	104 MVA
Winter Normal	119 MVA
Winter Emergency	125 MVA

Action Required:

1. Isolate #125 115kV line, Orleans - Wellfleet:

   Open: #12522 Circuit Breaker at Orleans Substation
   #12553 Circuit Switcher at Wellfleet
   #12563 Circuit Switcher at Wellfleet

   Close: Nothing

Two transformers and load will be out of service at Wellfleet Substation.

2. Assuming a permanent fault or outage on the #125 line, back up Wellfleet Substation via the #94 23kV DSS line from Orleans:

   Open: Have Line Crews manually cut 115kV taps to the #125 line at Wellfleet.

   Next, connect the two Wellfleet transformers in series for the benefit of 2 stages of voltage boost for the #96 line:

   A. Tap changers to neutral, and off. Lock Wellfleet GE* (i.e., transformer feeding the #94 line) tap changer to boost toward 115kV side.
   B. Verify open break to the #125 line, then **CLOSE** circuit switchers #12553 and #12563.
   C. **Close** Tie Switch T1-94-94
   D. Switch the following capacitor banks online:
      Wellfleet #1255C, Wellfleet #1256C, Orleans #1184c,
      1.8 MVAR bank on #94 line, pole 9251/87, and 1.8 MVAR bank on #94 line, pole 9251/93.
   E. Verify N. Truro and Race Point Regulators on #96 line are online.

Results:

This switching is effective only up to approximately 88% of 2004 summer peak forecasted load:

Wellfleet #94 line:	10.0 MW
Wellfleet #96 line:	21.9 MW
Orleans #94 line:	16.7 MW
Total 2004 peak:	49.5 MW
88% of peak:	43.7 MW.

The Limiting element is the Orleans AC transformer, rated 20/26/33 MVA nameplate, 43 MVA Summer normal and 47 MVA Summer LTE. See **Diagram T-25**.

Flow on Orleans AC transformer will be 50 MVA, exceeding 36 MVA SCADA Alarm Limit, and at 108% of 47 MVA LTE rating

Flow on Orleans #94 DSS line 49 MVA, exceeding both the 28 MVA SCADA Alarm and 33 MVA trip settings.

Voltages less than acceptable on #94 DSS line coming into Wellfleet Substation, 0.88 per unit on 23kV backbone prior to voltage boost offered by the two Wellfleet transformers.

Violations:

Overloads - #94 DSS line exceeds both SCADA Alarm and trip, and at 100% of 49 MVA rating for 795 ACSR conductor

Orleans AC transformer will be at 108% of LTE rating, and in excess of SCADA trip setting

Voltage - Low voltages of 0.88 per unit expected on #94 DSS line at Wellfleet Substation.

Notice: Load in excess of 88% of peak (49 MW total on combined Orleans 94, Wellfleet 94, and Wellfleet 96 lines) will have to be shed.

Additional Actions Required / Recommendations:

**Verify adequacy of 28 MVA alarm, 33 MVA trip settings for 795 ACSR conductor on #94 line.

The addition of a 115kV SCADA-controlled, motor-operated switch has been proposed for the Wellfleet end of the #125 line to permit more rapid system restoration, without having the need to dispatch line crews to manually cut line taps.

Load Shedding Exposure:

Load shedding risk in the Orleans – Wellfleet power supply area for a #125 transmission line outage exists only during Summer peak loading conditions on Fridays and weekends, a seasonal phenomenon occurring during periods of high temperatures and humidity.

The attached year 2002 load duration curve indicates only approximately 174 hours of risk when total power supply area load exceeds firm capability of the area for an outage of the #125 line.

The situation is being monitored at this time, but no bulk supply improvements are currently proposed.

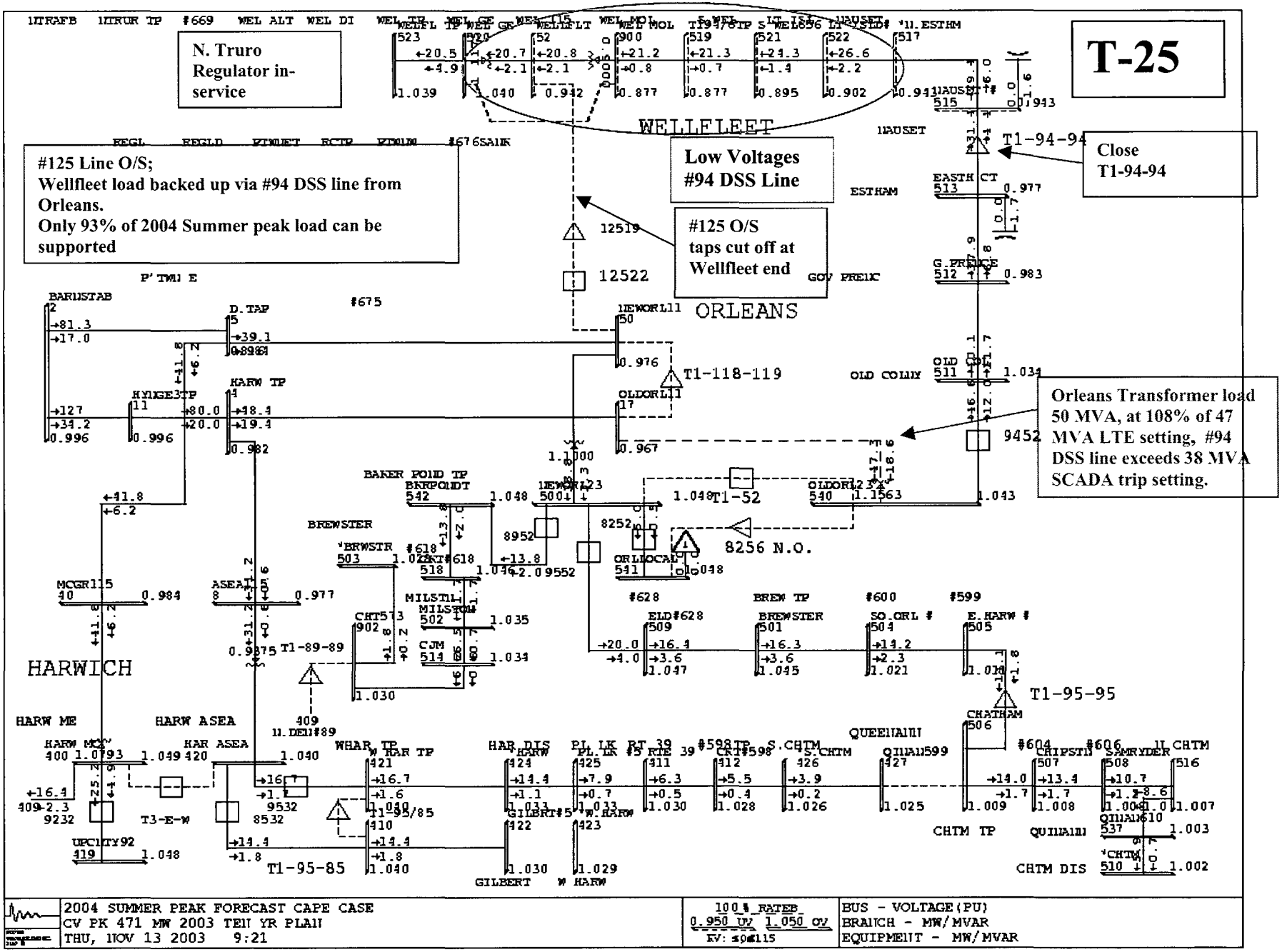
T-25
N. Truro Regulator in-service
#125 Line O/S;
Wellfleet load backed up via #94 DSS line from Orleans.
Only 93% of 2004 Summer peak load can be supported
Low Voltages #94 DSS Line
#125 O/S taps cut off at Wellfleet end
Close T1-94-94
Orleans Transformer load 50 MVA, at 108% of 47 MVA LTE setting, #94 DSS line exceeds 38 MVA SCADA trip setting.
WELLFLEET
ORLEANS
HARWICH
T1-94-94
T1-118-119
T1-52
T1-95-95
T1-89-89
T1-95-85
8256 N.O.
2004 SUMMER PEAK FORECAST CAPE CASE
CV PK 471 MW 2003 TEN YR PLAN
THU, NOV 13 2003 9:21
100% RATEB
0.950 UV 1.050 OV
BUS - VOLTAGE(PU)
BRANCH - MW/MVAR
EQUIPMENT - MW/MVAR

Wellfleet - Orleans Power Supply Area Load Duration

Load at Risk for Loss of #125 115kV Line (Orleans x Wellfleet)

Orleans AC Transformer and Voltage Collapse Limiting Elements

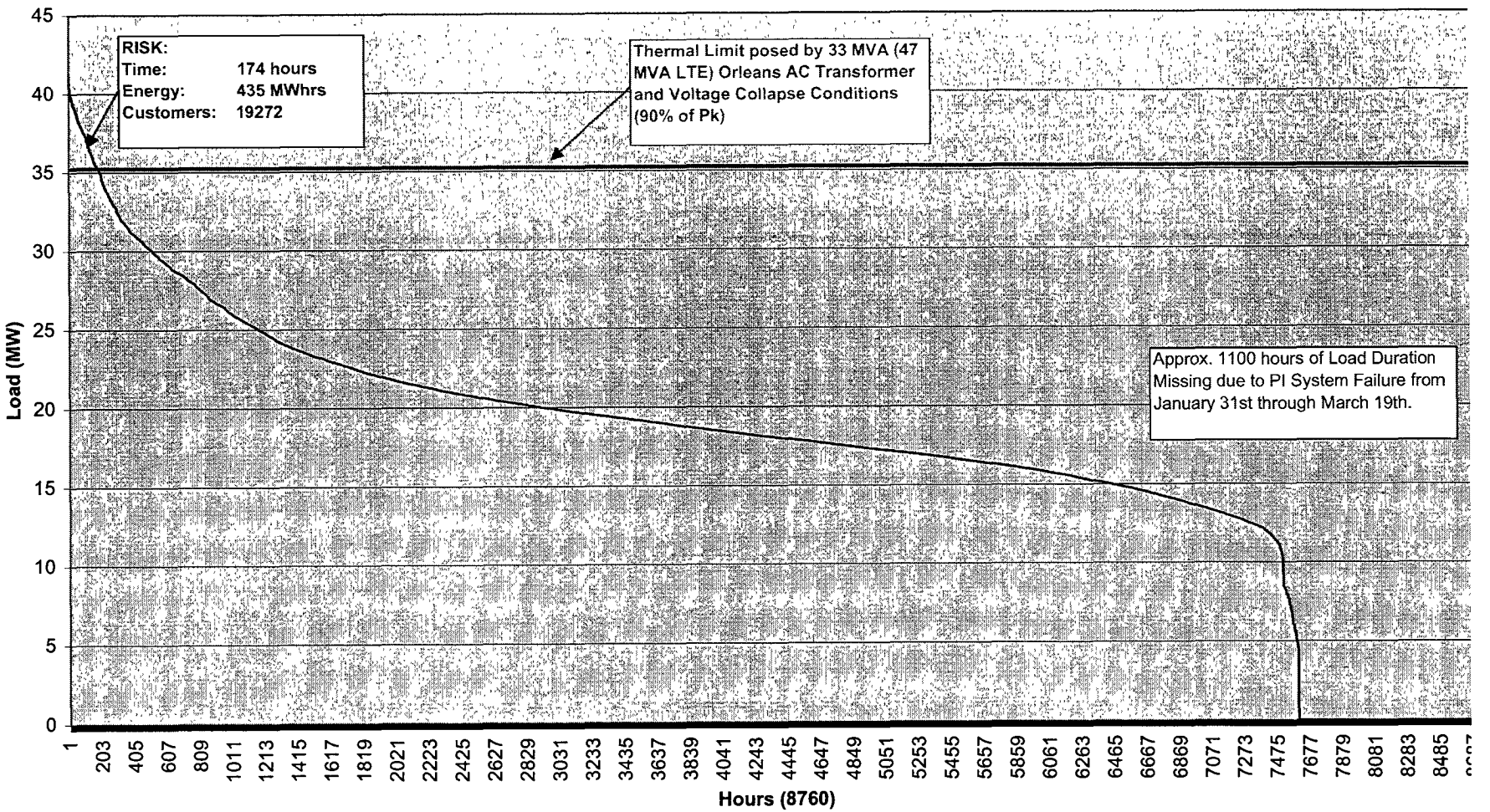

2004 T&D OPERATING STUDY

345 & 115kV Transmission Facilities

#126 115KV LINE (CANAL-BOURNE) OUTAGE CONTINGENCY

#126 2338 ACAR 115KV OVERHEAD TRANSMISSION LINE AND 400 MVA AUTOTRANSFORMER

Overload Ratings:

Summer Normal	398 MVA
Summer Emergency	422 MVA
Winter Normal	398 MVA
Winter Emergency	442 MVA

The limiting element are bushing CT's for Summer normal and Winter ratings; limit is 2000 Amp circuit breaker for Summer LTE rating.

Transformer: Summer (450 MVA normal / 470 MVA LTE), Winter (515 MVA normal / 555 MVA LTE)

Action Required:

1. Isolate #126 autotransformer and #115kV line, Canal to Bourne:

   Open: #612, #512, #812S Circuit Breakers at Canal Ring Bus.
   #12672 Circuit Breaker at Bourne S/S.
   Disconnect Switch #B12617
   Station Service Breaker #B2S12

   Close: #612, #512, #812S Circuit Breakers at Canal Ring Bus to restore closed ring.

Results:

After all switching is complete, no thermal or voltage violations, see **Diagrams T-26.**

Violations:

Overloads	-	None
Voltage	-	Minor voltage violation at 115kV side of Wellfleet Substation #9746 (0.94 per unit), not problematic at 23kV side of station.

Additional Actions Required / Recommendations:

None

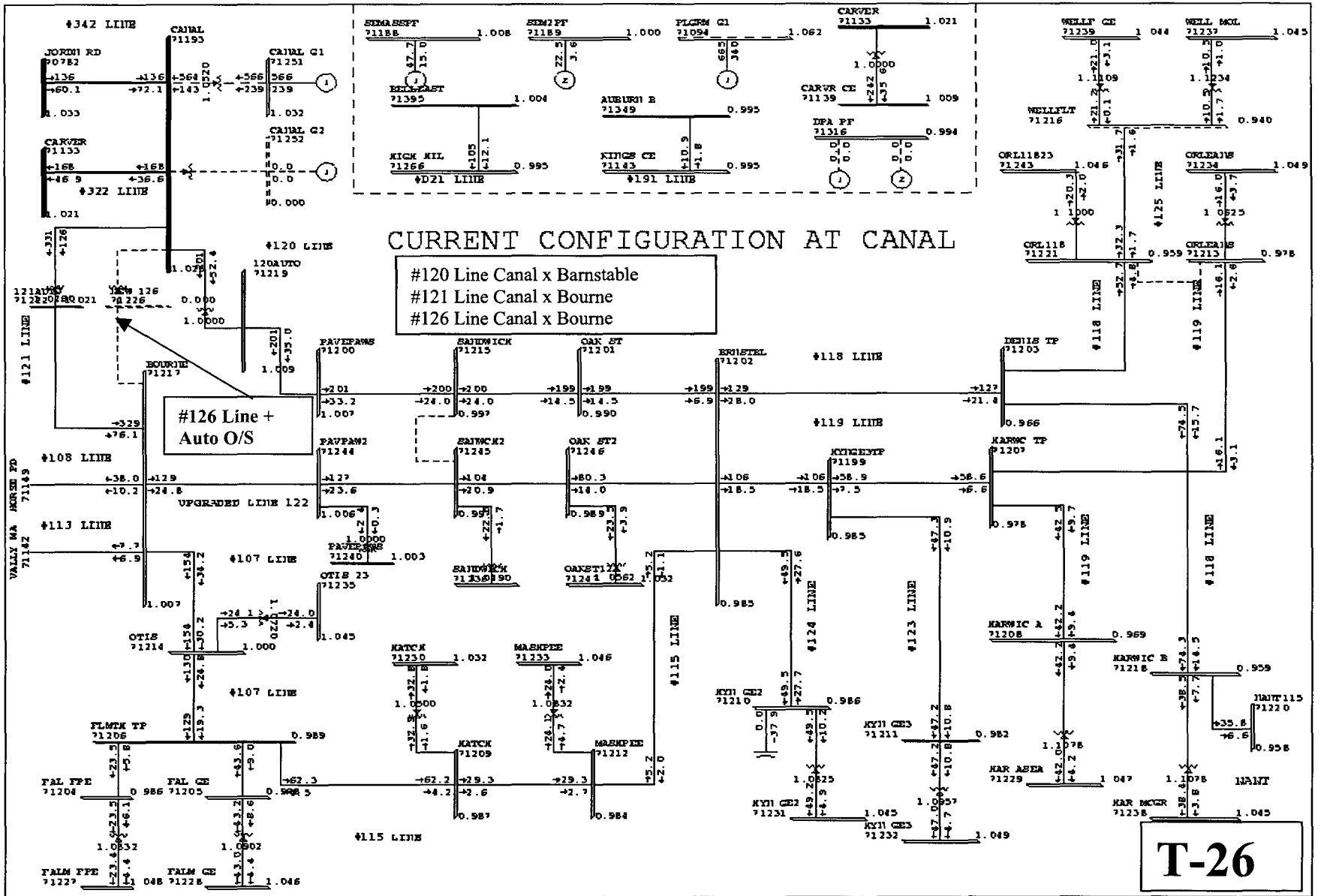

T-26

2003 NPCC BASE CASE LIBRARY SUMMER PEAK 2004 WED, NOV 12 2003 11:12	100% RATED 0.950 UV 1.050 OV KV: ≤23 , ≤115 , ≥345	BUS - VOLTAGE(PU) BRANCH - MW/MVAR EQUIPMENT - MW/MVAR

2004 T&D OPERATING STUDY

345 & 115kV Transmission Facilities

#127 115KV LINE (SEMASS S/S-CARVER) OUTAGE CONTINGENCY

#127 2338 ACAR 115KV OVERHEAD TRANSMISSION LINE

Overload Ratings:

Summer Normal	282 MVA
Summer Emergency	313 MVA
Winter Normal	282 MVA
Winter Emergency	313 MVA*

Limit is bushing CT at SEMASS Tap.

Action Required:

1. Isolate #127 115kV line, SEMASS Tap to Carver Ring Bus:

   Open: #12782 Circuit Breaker at SEMASS S/S
   #152 and #652 Circuit Breakers as Carver

   Close: Nothing

Results:

After all switching is complete, no thermal or voltage violations, **Diagram T-27**.

Violations:

Overloads - None

Voltage - None

Additional Actions Required / Recommendations:

None.

PAC

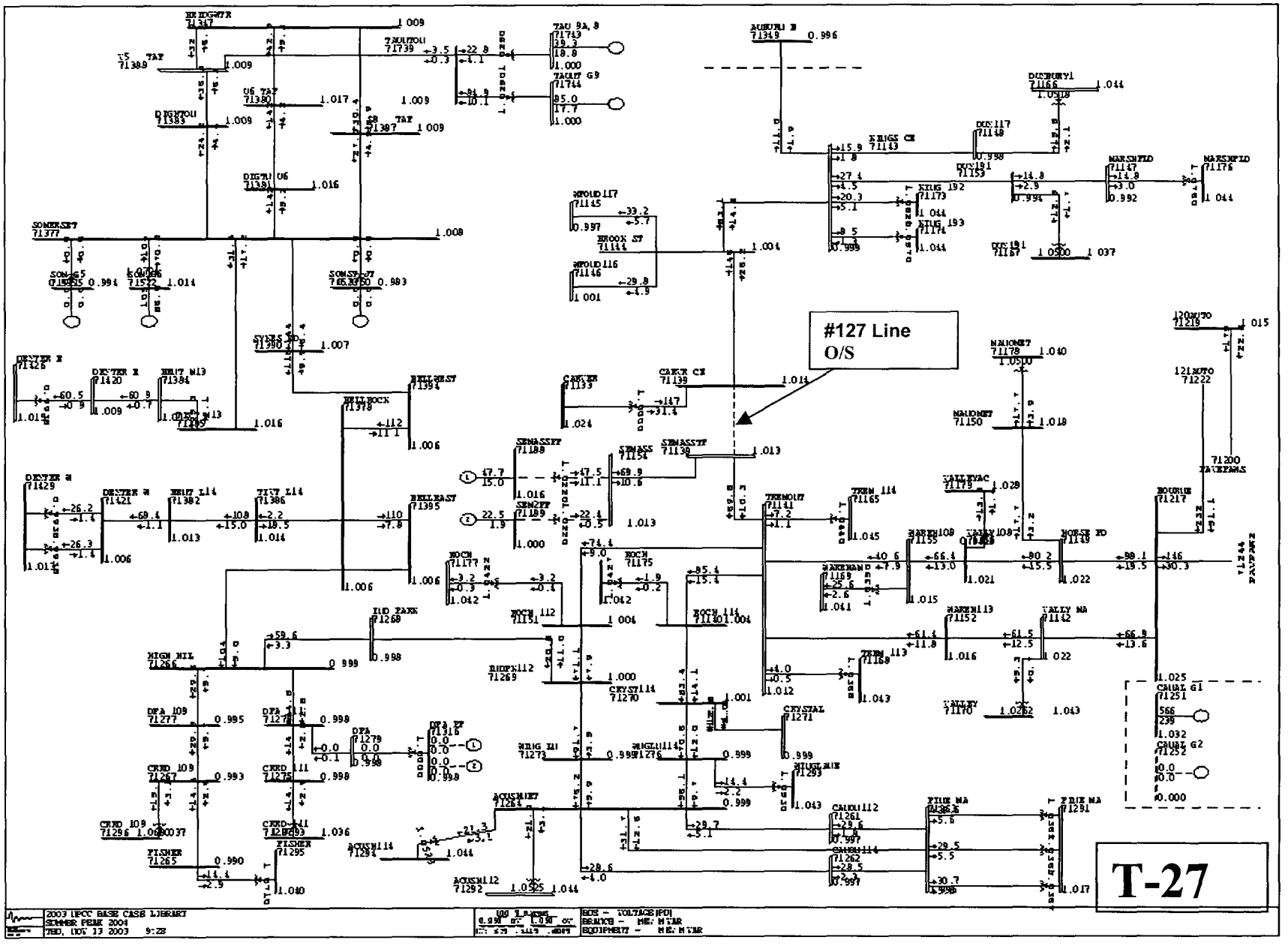
#127 Line
O/S
T-27
2003 NPCC BASE CASE LIBRARY
SUMMER PEAK 2004
TUE, NOV 13 2003 9:28

2004 T&D OPERATING STUDY

345 & 115kV Transmission Facilities

#128 115KV LINE (TREMONT S/S-SEMASS S/S) OUTAGE CONTINGENCY

#128 2338 ACAR 115KV OVERHEAD TRANSMISSION LINE

Overload Ratings:

	Summer Normal	398 MVA
Summer Emergency	**398 MVA**	
	Winter Normal	398 MVA
	Winter Emergency	398 MVA*

Limit is based on a relay setting at Tremont and SEMASS.

Action Required:

1. Isolate #128 115kV line, SEMASS S/S to Carver S/S:

   Open: #12882 Circuit Breaker at SEMASS S/S
   #12832 Circuit Breaker at Tremont S/S

   Close: Nothing

Results:

After all switching is complete, no thermal or voltage violations, **Diagram T-28**.

Violations:

Overloads - None

Voltage - None

Additional Actions Required / Recommendations:

None

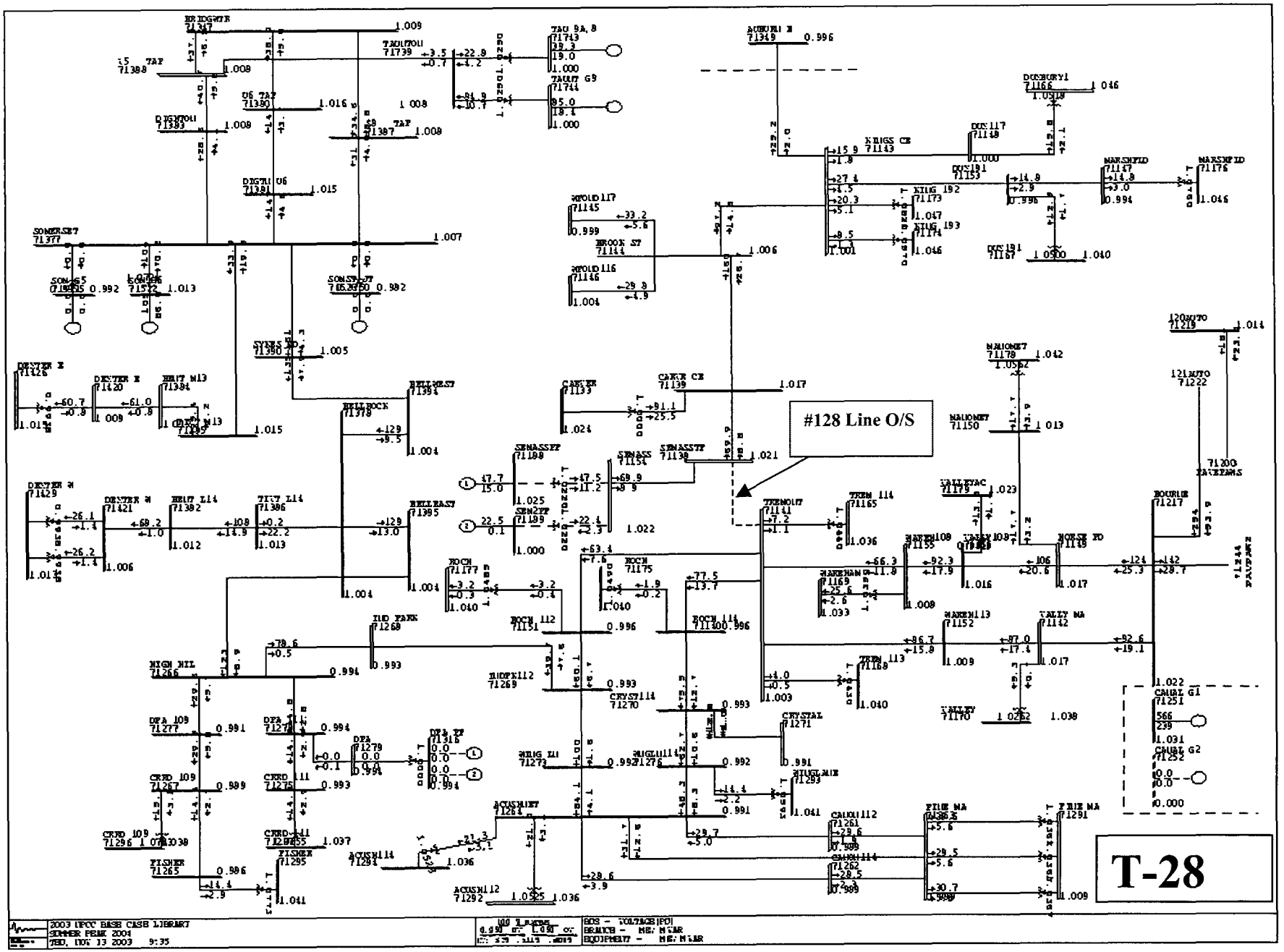
#128 Line O/S
T-28
2003 WPCC BASE CASE LIBRARY
SUMMER PEAK 2004
WED, NOV 13 2003 9:35

2004 T&D OPERATING STUDY

345 & 115kV Transmission Facilities

#129 115KV LINE (SEMASS S/S-SEMASS PLANT) OUTAGE CONTINGENCY

#129 795 ACSR 115KV OVERHEAD TRANSMISSION LINE

Overload Ratings:

Summer Normal	120 MVA
Summer Emergency	127 MVA
Winter Normal	120 MVA
Winter Emergency	133 MVA

Limit based on CT's and circuit breakers at SEMASS S/S

Action Required:

1. Isolate #129 115kV line, SEMASS S/S to SEMASS Plant:

   Open: #12989 Switch at SEMASS S/S
   #12952, #13052 Breakers at SEMASS Plant

   Close: Nothing

SEMASS Plant will be offline for the duration of this line outage.
Consult any operating procedures for the SEMASS plant which may impact any switching on the #129 line.

Results:

After all switching is complete, no thermal or voltage violations, **Diagram #T-29.**

Violations:

Overloads - None

Voltage - None

Additional Actions Required / Recommendations:

None

F

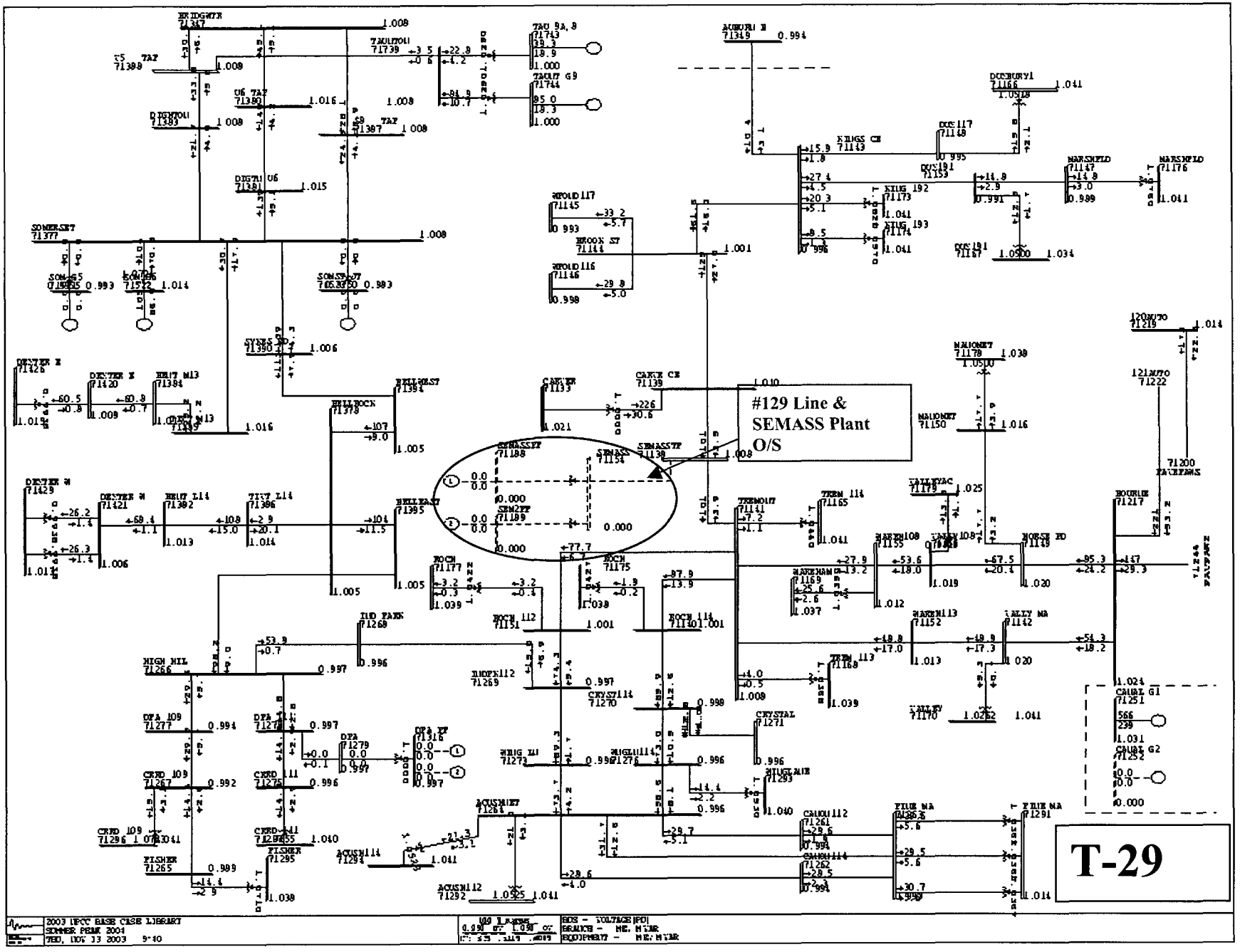
#129 Line &
SEMASS Plant
O/S
T-29
2003 IPCC BASE CASE LIBRARY
SUMMER PEAK 2004
TUE, NOV 13 2003 9:40

2004 T&D OPERATING STUDY

345 & 115kV Transmission Facilities

#130 115KV LINE (ACUSHNET – PINE STREET) OUTAGE CONTINGENCY

#130 1000 KCMIL EPR 115KV UNDERGROUND TRANSMISSION CABLE

Overload Ratings:

Summer Normal	167 MVA
Summer Emergency	167 MVA
Winter Normal	**167 MVA**
Winter Emergency	167 MVA

Action Required:

1. Isolate #130 115kV cable, Acushnet to Pine Street:

   Open: #13022 Circuit Breaker at Acushnet Substation
   #13002 Circuit Breaker at Pine Street Substation.

   Close: Nothing

Results:

After all switching is complete, no thermal or voltage violations, **Diagram #T-30**.

Violations:

Overloads - None

Voltage - None

Additional Actions Required / Recommendations:

None.

PA(

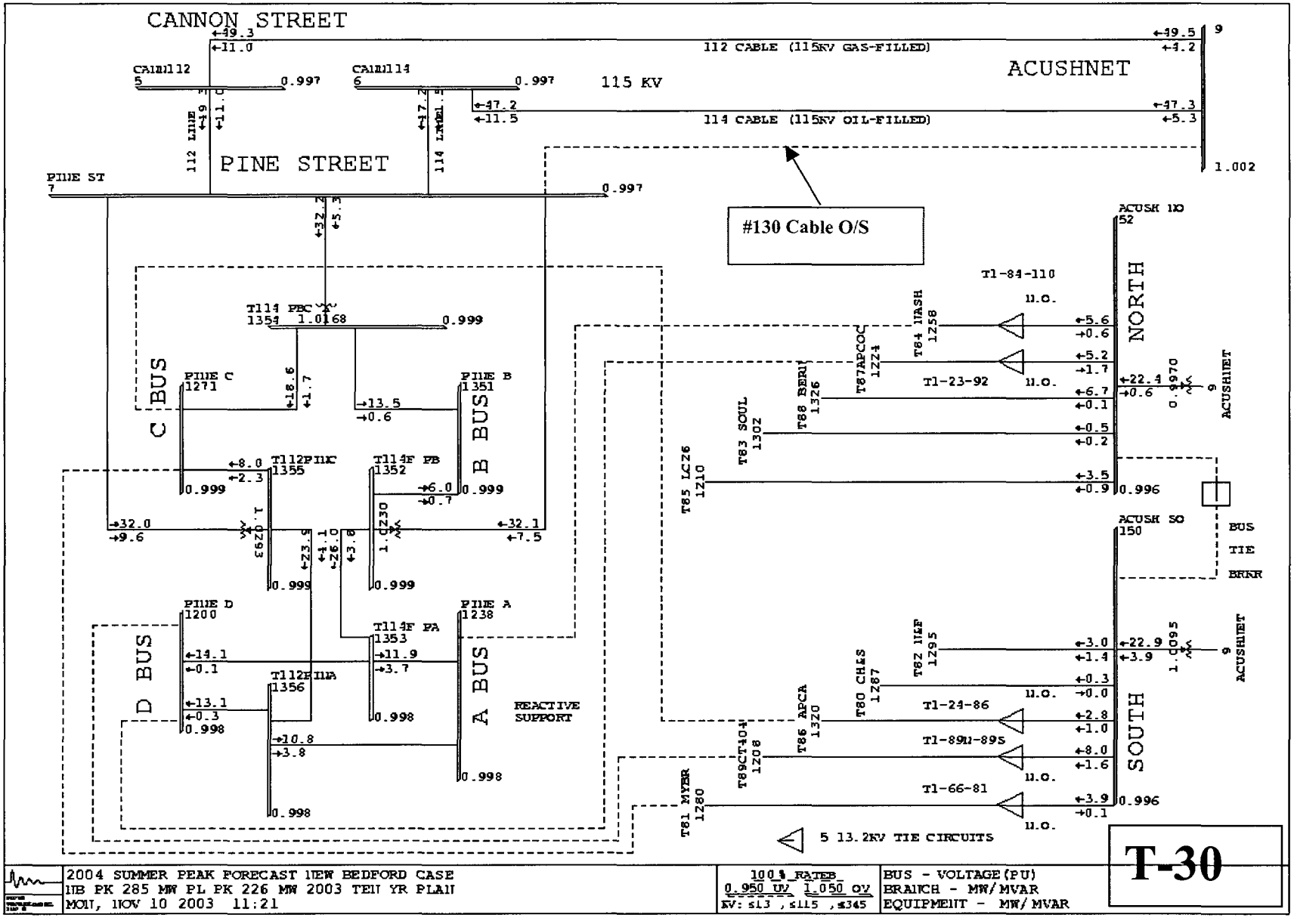
CANNON STREET
112 CABLE (115KV GAS-FILLED)
114 CABLE (115KV OIL-FILLED)
115 KV
ACUSHNET
PINE STREET
#130 Cable O/S
C BUS
B BUS
D BUS
A BUS
REACTIVE SUPPORT
NORTH
SOUTH
BUS TIE BRKR
5 13.2KV TIE CIRCUITS
2004 SUMMER PEAK FORECAST NEW BEDFORD CASE
NB PK 285 MW PL PK 226 MW 2003 TEN YR PLAN
MON, NOV 10 2003 11:21
100% RATED
0.950 UV 1.050 OV
KV: ≤13 , ≤115 , ≤345
BUS - VOLTAGE(PU)
BRANCH - MW/MVAR
EQUIPMENT - MW/MVAR

T-30

2004 T&D OPERATING STUDY

345 & 115kV Transmission Facilities

#322 345KV LINE (CANAL S/S - CARVER) OUTAGE CONTINGENCY

#322 2338 ACAR 345KV OVERHEAD TRANSMISSION LINE

*Double-circuit tower construction with #342 line at Cape Cod Canal Crossing, 1 span

Overload Ratings:

Summer Normal	1035 MVA
Summer Emergency	1149 MVA
Winter Normal	1035 MVA
Winter Emergency	1149 MVA

Ratings based on C.T.'s at Canal and Carver Ring Busses.

Action Required:

1. Isolate #322 345kV line, Canal to Carver

   Open: #112 and #212 Circuit Breakers, Canal Ring Bus
   #262 and #362 Circuit Breakers, Carver Ring Bus.

   Then,

   Open: #32215 Switch on #322 line at Canal

   Close: #112 and #212 Circuit Breakers to re-establish closed ring bus at Canal.

2. **Leave Ring bus closed.** Canal generation limited as indicated:

   Limit the output of Canal station as follows:

   1.) One unit on – 375 MW max.

   2.) Two units on – 600 MW max. (not to exceed 525 MW on either unit)

Results:

After all switching and rampdowns are complete, no thermal or voltage violations, **Diagram #T-31**.

Violations:

Overloads - None

Voltage - None

Additional Actions Required / Recommendations:

Failure to follow operating procedure and respecting generation limits will cause Canal to become unstable for subsequent trip of the #342 line.

2004 T&D OPERATING STUDY

345 & 115kV Transmission Facilities

#342 345KV LINE (CANAL S/S – STANDISH TAP – JORDAN RD-PILGRIM-AUBURN STREET) OUTAGE CONTINGENCY

#342 2-1703 ACAR 345KV OVERHEAD TRANSMISSION LINE

*Double-circuit tower construction with #342 line at Cape Cod Canal Crossing, 1 span
**Double-circuit tower construction with #355 line from Myles Standish Tap to Jordan Rd. to Pilgrim
***Double-circuit tower construction with 2nd circuit temporarily de-energized from Jordan Rd. to Auburn Street.

Overload Ratings:

Summer Normal	1035 MVA
Summer Emergency	1149 MVA
Winter Normal	1035 MVA
Winter Emergency	1149 MVA

Ratings based on C.T.'s at Canal.

Action Required:

1. Isolate #342 345kV line, Canal to Carver

   Open: #312 and #412 Circuit Breakers, Canal Ring Bus
   #2130 Circuit Breaker at Auburn Street (National Grid USA)
   #103 and #104 Circuit Breakers, Entergy Pilgrim Ring Bus.*****

   Then,

   Open: #34215 Switch on #342 line at Canal

   Close: #312 and #412 Circuit Breakers to re-establish closed ring bus at Canal.

2. **Leave Ring bus closed.** Canal generation limited as indicated:

Required Action

Limit the output of Canal station as follows:

3.) One unit on – 375 MW max.

4.) Two units on – 575 MW max. (not to exceed 500 MW on either unit)

Results:

After all switching and rampdowns are complete, no thermal or voltage violations, see **Diagram #T-32**.

Violations:

Overloads - None

Voltage - None

Additional Actions Required / Recommendations:

Failure to follow operating procedure and respecting generation limits will cause Canal to become unstable for subsequent trip of the #342 or #331 (Carver – W. Walpole) lines.

*****Switching or Operating Procedures relevant to the Entergy Pilgrim plant or its 345kV ring bus would have to be followed as well

******The de-energized state of the 2nd circuit of the Jordan Road – Auburn Street portion of the line is an "off schedule" condition that has been necessitated by relaying problems on this line. The resolution of this problem has not yet been determined.

2004 T&D OPERATING STUDY

345 & 115kV Transmission Facilities

#331 345KV LINE (CARVER-W. WALPOLE) OUTAGE CONTINGENCY

#331 2335 ACAR 345KV OVERHEAD TRANSMISSION LINE

Overload Ratings:

Summer Normal	1035 MVA
Summer Emergency	1149 MVA
Winter Normal	1035 MVA
Winter Emergency	1149 MVA

Limits posed by CT's at Carver Ring Bus.

Action Required:

Specific switching and units rampdowns are required at Mirant Canal to respect stability limits established for 345kV line-out conditions. Please refer to the attached table for details, switching procedure is repeated below.

1. Isolate #331 345kV Line, Carver to W. Walpole

   Open: #162 and #362 Circuit Breakers at Carver
   #104 and #105 Circuit Breakers at W. Walpole *

   Close: Nothing

Similar limitations to Canal output apply to #331 line out as for #322 line out, discussed previously:

2. **Leave Ring bus closed.** Canal generation limited as indicated:

Required Action
Limit the output of Canal station as follows:

5.) One unit on – 475 MW max.

6.) Two units on – 700 MW max.

Results:

After all switching is complete, no thermal or voltage violations, see **Diagram T-33**

Violations:

Overloads - None

Voltage - None

Additional Actions Required / Recommendations:

None. The need to open switch #T-900 at W. Walpole to permit closure of breakers #104 and #105 to re-establish the ring at W. Walpole would have to be determined.

Failure to follow operating procedure and respecting generation limits will cause Canal to become unstable for subsequent trip of the #342 or #332 (Canal – Carver) lines.