H- 75775-P

MDTE No. 03-___
Exhibit AJM-3
Page 1 of 2

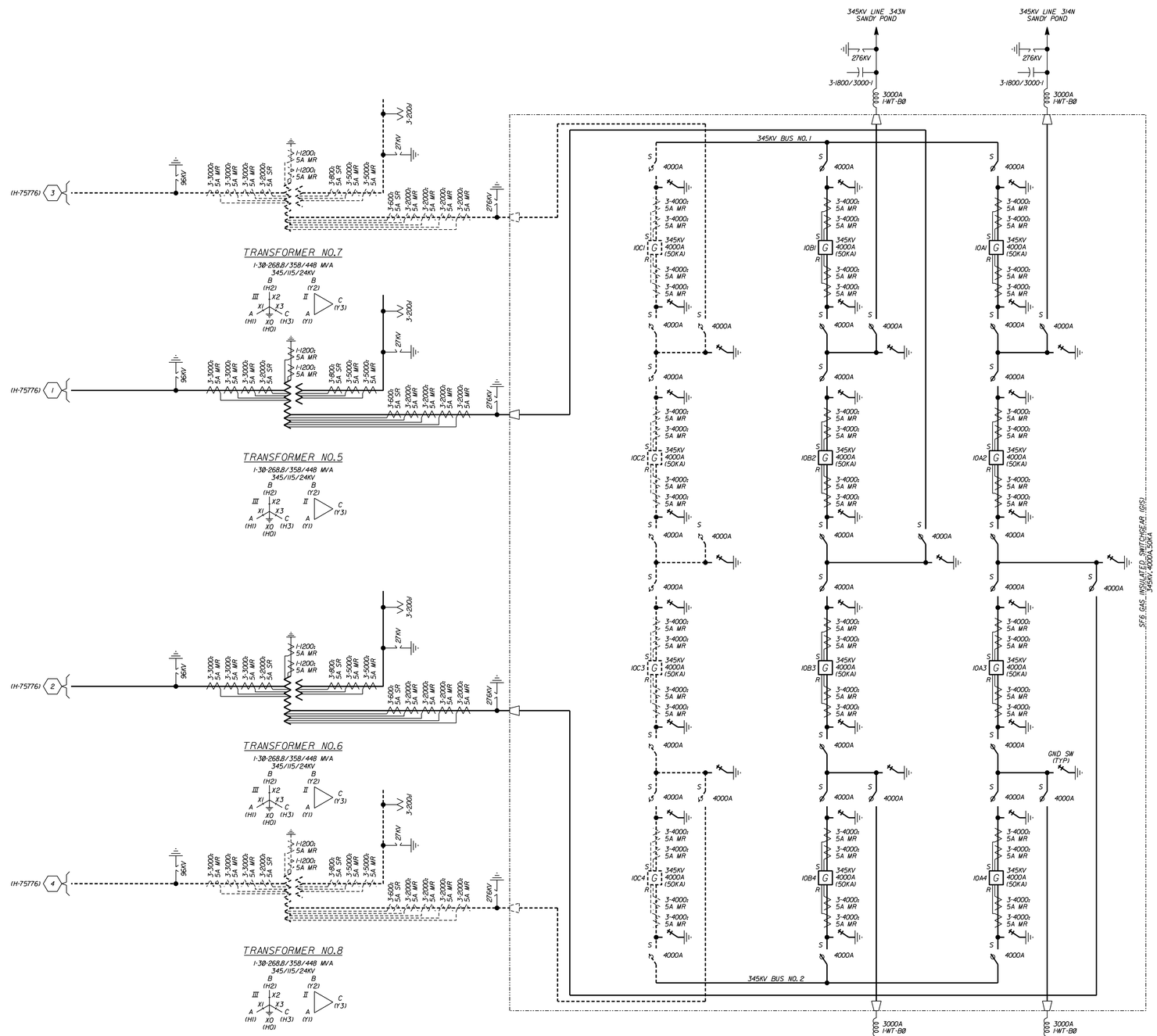

LEGEND

FUTURE
PROPOSED

REFERENCE DRAWINGS

ONE LINE DIAGRAM,SH.2 H-75776

CONFIDENTIALITY STATEMENT

This document contains confidential and proprietary information of the National Grid USA companies. It is to be used by authorized contractors of those companies solely in connection with the specific project for which it has been transmitted. Any other use, its transmittal to third parties, or its reproduction without prior express written authorization of a National Grid USA company is strictly prohibited.

NATIONAL GRID USA Service Company, Inc.
PART OF NATIONAL GRID USA
WESTBORO, MA

NEW ENGLAND POWER COMPANY

WACHUSETT SUBSTATION NO. 47
WACHUSETT, MASSACHUSETTS

WIRING
ONE LINE DIAGRAM

SCALE NONE

SHEET 1 OF 2

H- 75775-P

REVISIONS

REV.	DATE	DESCRIPTION	MADE	CHKD	INSP	REVD	APVD	APVD
5								
6								
7								
8								

REVISIONS

REV.	DATE	DESCRIPTION	MADE	CHKD	INSP	REVD	APVD	APVD
1								
2								
3								
4								

ORIGINAL DATE	
DRAWN	LMC/BW
DESIGNED	RF/BW
CHECKED	TAP/BW
INSPECTED	
REVIEWED	TAP/BW
APPROVED	
APPROVED	

'0' ISSUE ON # 10-9407-1000

NOTED

.../bsvfilea/h75775.dgn 01/15/2004 9:10:59 AM

MDTE No. 03-___
Exhibit AJM-3
Page 2 of 2

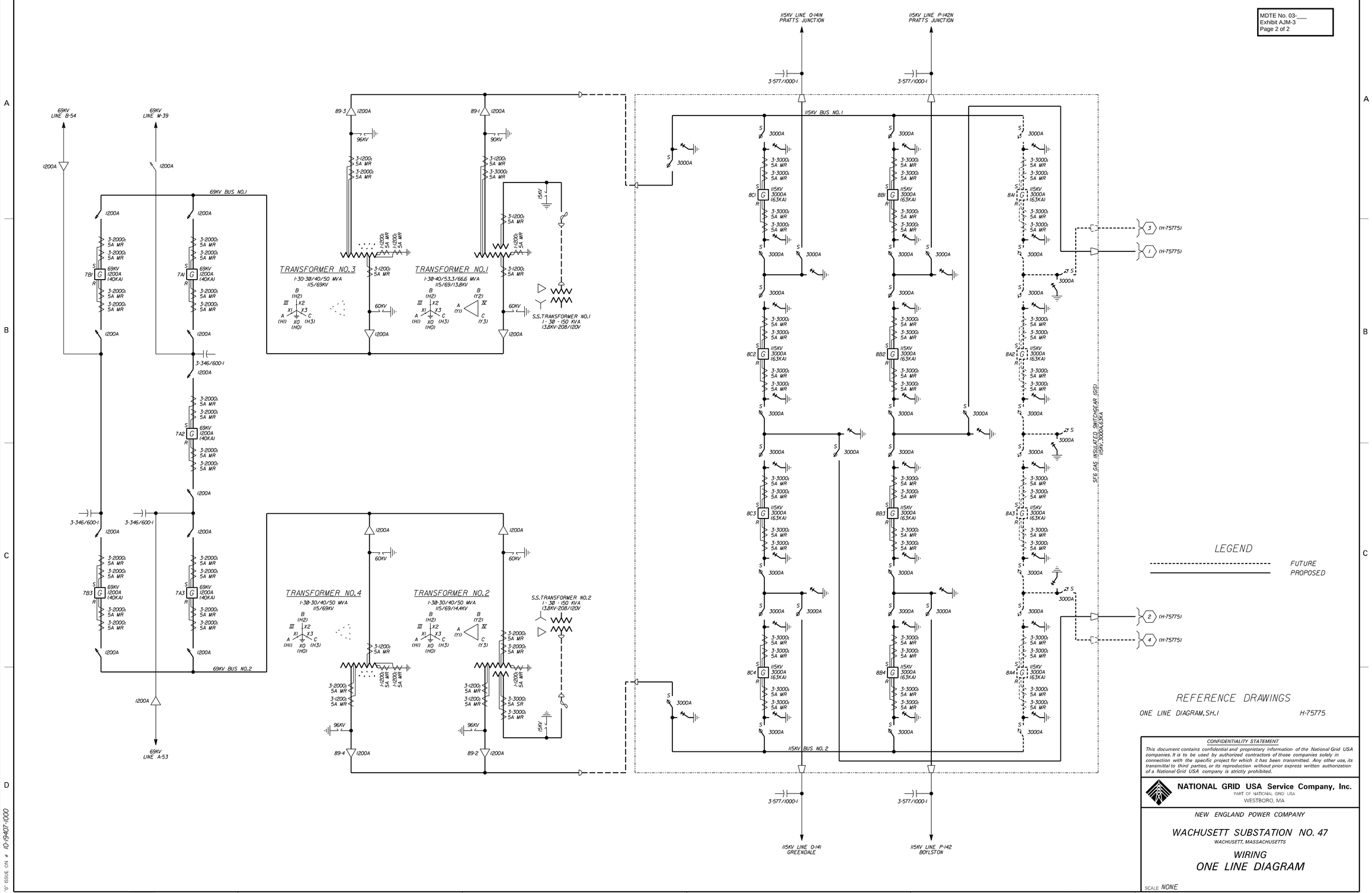

CONFIDENTIALITY STATEMENT

This document contains confidential and proprietary information of the National Grid USA companies. It is to be used by authorized contractors of those companies solely in connection with the specific project for which it has been transmitted. Any other use, its transmittal to third parties, or its reproduction without prior express written authorization of a National Grid USA company is strictly prohibited.

NATIONAL GRID USA Service Company, Inc.
PART OF NATIONAL GRID USA
WESTBORO, MA

NEW ENGLAND POWER COMPANY

WACHUSETT SUBSTATION NO. 47
WACHUSETT, MASSACHUSETTS

WIRING
ONE LINE DIAGRAM

SCALE NONE

SHEET 2 OF 2

H– 75776–P

REVISIONS

REV.	DATE	DESCRIPTION	MADE	CHKD	INSP	REVD	APVD	APVD
5								
6								
7								
8								

REVISIONS

REV.	DATE	DESCRIPTION
1		
2		
3		
4		

ORIGINAL DATE	
DRAWN	LNE/RBW
DESIGNED	RF/RBW
CHECKED	TAP/RBW
INSPECTED	TAP/RBW
REVIEWED	
APPROVED	
APPROVED	

"D" ISSUE ON # 10-9407-1000

NOTED

H– 75776–P

.../bsvfiles/h75776.dgn 01/15/2004 8:46:04 AM