Attachment 3-12
Existing One Line Diagram

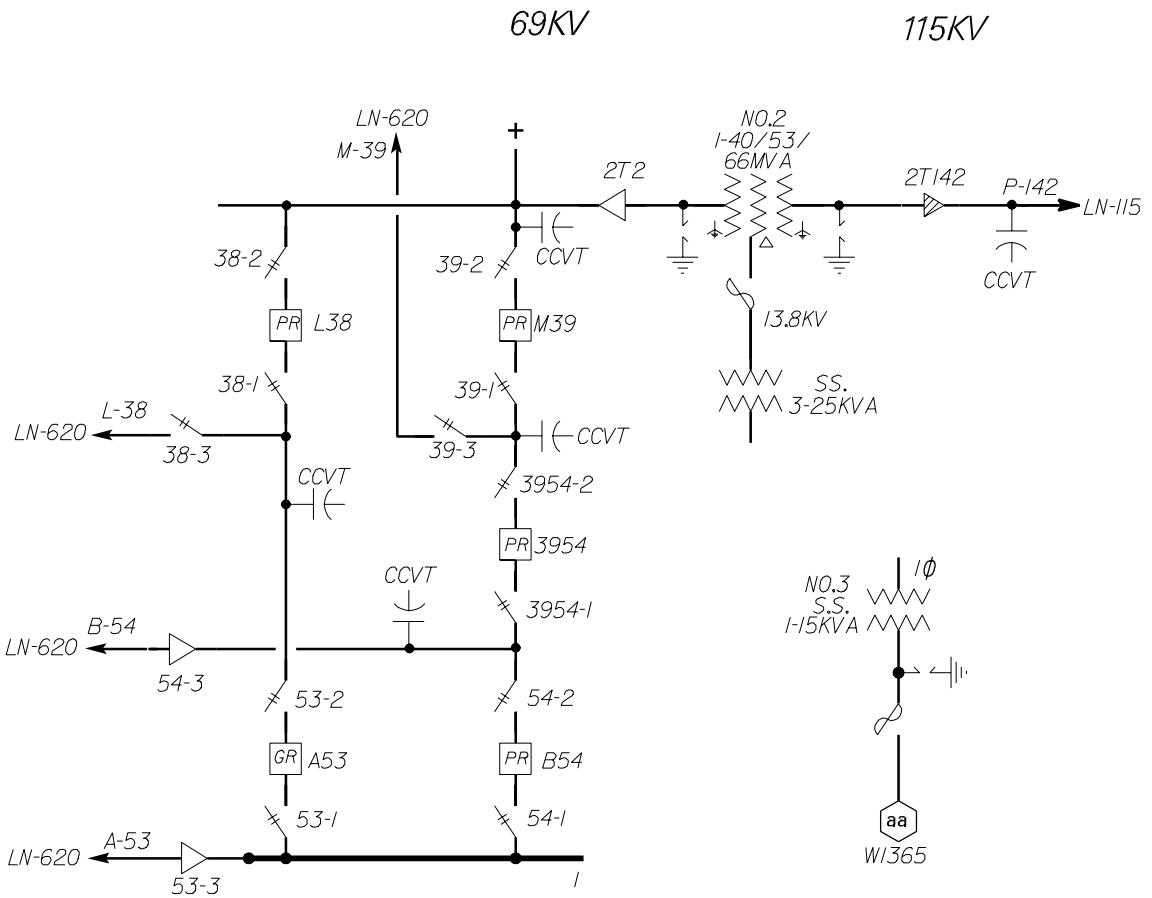

WACHUSETT NO. 47

BAY STATE WEST DIVISION

11-18-02

W1121