Verizon New England Inc. d/b/a
Verizon Massachusetts
D.T.E. 03-60
ATT-VZ-Exhibit 3-155

Hot Cut Schematic

Line Shared or Split (Option C)

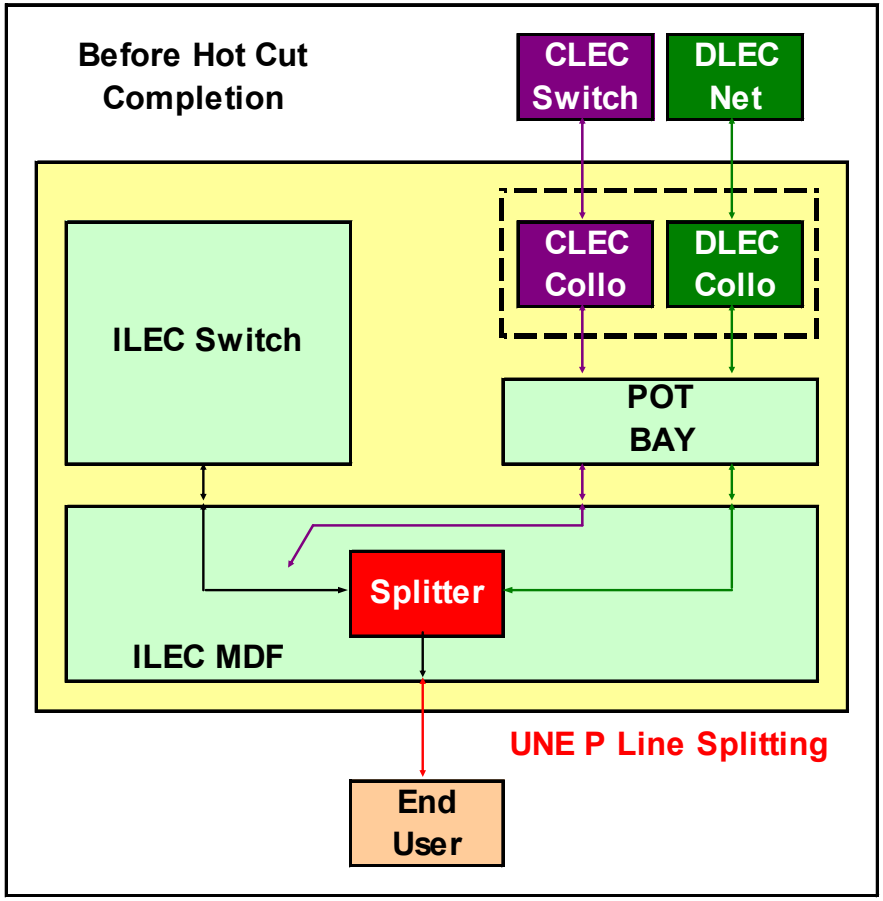

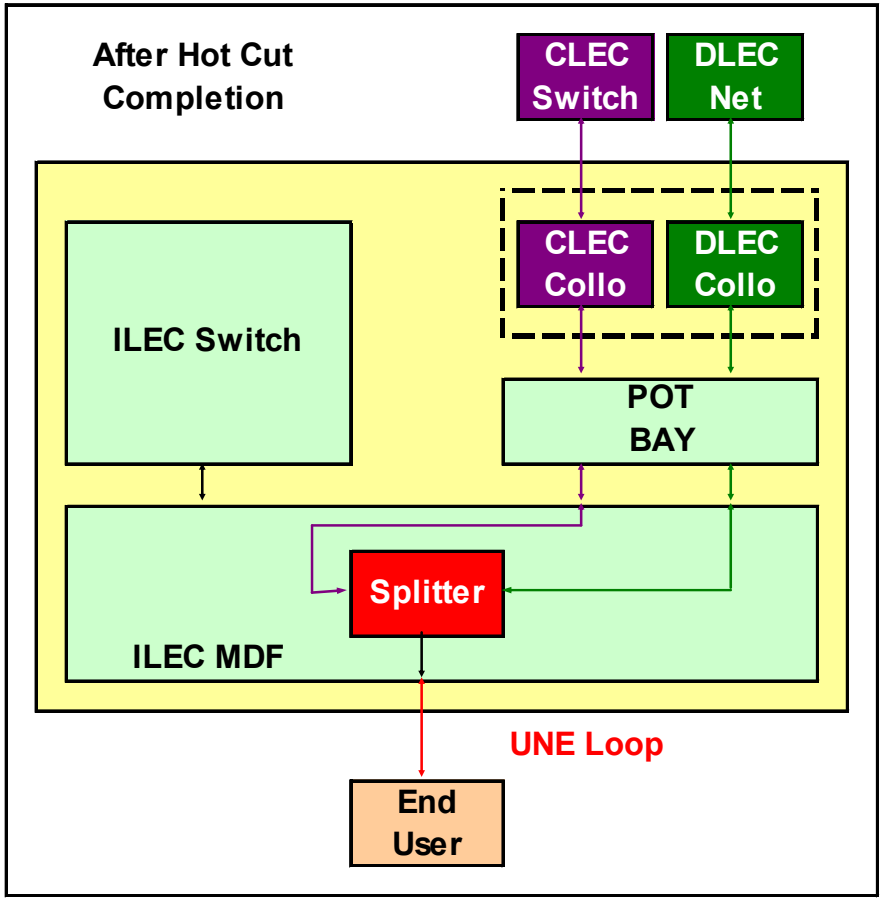

ILEC Equipment
Central Office
CLEC Equipment
DLEC Equipment