Stage I Vapor Recovery
Weekly Inspection & Compliance Guidance
for Gasoline Dispensing Facilities

Massachusetts Department of Environmental Protection (MassDEP)
Bureau of Air and Waste

March 2015

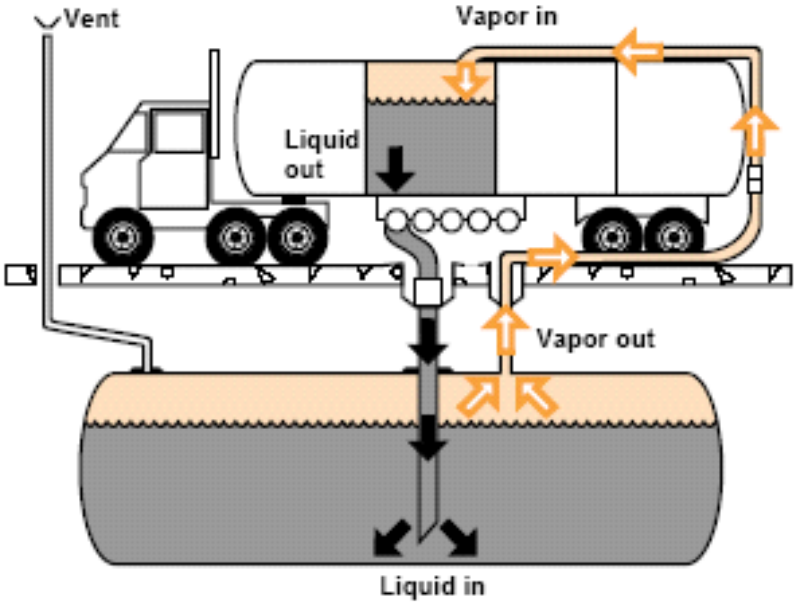

Graphics Courtesy of California Air Resources Board (CARB)

Table of Contents

Introduction - MassDEP's Revised Stage I & II Regulations 4

MassDEP Disclaimer 4

Summary of Requirements for Stage I Responsible Officials 5

Stage I System Training 7

Training Requirements 7

Training Resources 7

CARB Executive Orders 7

Identifying Your Stage I System 8

Stage I Vapor Recovery 8

Stage I Applicability 8

Coaxial and Dual-Point Stage I Vapor Recovery 9

CARB Stage I Systems 9

Pre-EVR Stage I Systems 9

Enhanced Vapor Recovery (EVR) Stage I Systems 9

MassDEP Approved Stage I EVR Systems 9

Pre-EVR/EVR Stage I System 9

CARB EVR Stage I System 10

Component EVR Stage I System 10

Table 1. CARB Certified EVR Stage I Systems for USTs 10

Aboveground Storage Tank (AST) EVR Stage I Systems 10

Standing Loss Control 10

Table 2. CARB EVR AST Systems and Certified Paints & Finishes 11

CARB Executive Orders for AST EVR Systems 12

Table 3. G-70-216 - AST Conditions for Existing Older ASTs 12

Table 4. CARB Certified EVR Stage I Systems for ASTs 12

Stage I EVR Installation Deadlines 13

Table 5. Stage I EVR Installation Deadlines 13

Stage I System Maintenance 13

Dual-Point Stage I Vapor Adaptors 13

Coaxial Stage I Adaptors 13

Vapor Caps 14

Spill Containment Buckets 14

Stage I System Weekly Visual Inspections 15

Safety Precautions When Conducting Stage I Inspections 15

Stage I System Weekly Inspection Checklist Instructions 15

Actions to take when damaged components are discovered 16

Stage I Compliance Testing Requirements **17**
Table 6. Required Annual Tests for Stage I Systems 17
Actions to take when Stage I Tests Fail 17
Stage I Certification Forms **18**
Form A - Installation Certification Form 18
Form C - Annual Certification Form 18
Form D1 & D2 - Alternative Annual Certification Forms 18
Stage I Certification Form Mailings and Due Dates 19
Recordkeeping Requirements **19**
Definitions: Routine Maintenance, Minor and Substantial Modification **19**
Table 7. Routine Maintenance, Minor and Substantial Modifications 20
Notifying MassDEP - Change of Owner/Operator **21**
Notification for new owner/operator of a Stage I facility 21
Ending your role as an owner/operator of a Stage I facility 21
Notifying MassDEP - Stage I System Closure & Tank Closure **21**
Fuel Dispensing: Topping Off, Spill Prevention, and Clean Up **22**
MassDEP & Other State & Local Resource Contacts **23**
Diagram 1. Stage I Vapor Recovery **25**
Diagram 2. Coaxial Stage I Vapor Recovery **26**
Diagram 3. Dual-Point Stage I Vapor Recovery **27**
Diagram 4. Dual-Point Stage I Vapor Adaptor & Vapor Cap **28**
Diagram 5. Spill Containment Bucket for Product Fill **29**
Diagram 6. Stage I EVR – Sample Product Installation **30**
Diagram 7. Stage I EVR – Sample Vapor Installation **31**
MassDEP Stage I Training Log **32**
MassDEP Stage I System Weekly Inspection Checklist **33**

Introduction - MassDEP's Revised Stage I & II Regulations

The Massachusetts Department of Environmental Protection (MassDEP) has amended its Air Pollution Control regulations (310 CMR 7.00 and 310 CMR 7.24) to require removal of Stage II vapor recovery systems and enhancements to Stage I vapor recovery equipment at gasoline dispensing facilities (GDFs). The revised regulations became effective on January 2, 2015.

Gasoline vapors contribute to the formation of ground-level ozone and also contain toxic chemicals. Stage I systems capture vapors displaced by the filling of storage tanks, and Stage II systems capture vapors displaced by the filling of vehicles. The new regulations update the vapor recovery program due to improved Stage I system technology and widespread adoption of vehicle on-board vapor recovery so that Stage II systems are no longer needed.

MassDEP Disclaimer

- This document contains guidance information on the MassDEP Stage I regulation and applicable CARB Executive Orders. This guidance is not a substitute for any requirements contained in the MassDEP Stage I regulation (310 CMR 7.24(3) Distribution of Motor Vehicle Fuel), or system specific terms and conditions contained in applicable CARB Executive Orders.

For more detailed program requirements, please see:

MassDEP Stage I Vapor Recovery regulation, 310 CMR 7.24(3) Distribution of Motor Vehicle Fuel

http://www.mass.gov/eea/agencies/massdep/air/programs/stage-ii-vapor-recovery.html

Graphics in this Guidance are reprinted with the permission of CARB.

Summary of Requirements for Stage I Responsible Officials

Stage I Responsible Officials must do the following to be in compliance with the MassDEP Stage I Vapor Recovery program:

1. **Review the Stage I Weekly Inspection & Compliance Guidance Manual.**

   - You must **review** the Stage I Weekly Inspection & Compliance Guidance Manual to understand the Stage I program requirements and to understand the compliance questions on the Stage I Annual In-Use Certification forms.

   - The Stage I Responsible official(s) must visually inspect the Stage I system **weekly.**

2. **Register with MassDEP by completing and submitting a Stage I Form E within 30 days of becoming an owner/operator of a Stage I facility.**

   - The MassDEP Stage I regulation requires that new owner/operators of a Stage I facility must register with the MassDEP Stage I Program by submitting a fully completed **Stage I Form E - New Stage I System Owner, Lessee, Operator or Controller Notification.**

   - The Stage I Form E must be completed and signed by a designated **Stage I Responsible Official #1.**

   - **Please note:** if you have already received an annual Stage I Form C and/or a Stage I compliance fee from MassDEP then your facility is registered with the Stage I program.

   - The Stage I Form E is not applicable for facilities where a new motor vehicle fuel dispensing facility has been installed for the **first** time. A Stage I Form A needs to be submitted instead (see below).

3. **If you are no longer an owner/operator of a Stage I facility you must notify MassDEP in writing within 30 days. The letter must provide the following information regarding the new Stage I owner/operators (O/O):**

   - Date facility was sold, lease terminated, or Stage I O/O role ended.
   - Contact Names for new Stage I O/Os
   - Phone numbers and email addresses for new Stage I O/Os
   - Mailing addresses for new Stage I O/Os
   - New company and/or business name

4. **Call a Stage I Testing Company to schedule Stage I Testing**

   - Stage I Compliance tests are required annually.

   - A Stage I Testing Company List is available at the Stage I/II website link below.

5. **Complete and Submit a Stage I certification form (Form A or C)**

- Once you have submitted the Stage I Form E, a Stage I Form C will be mailed to your facility mailing address annually, four months in advance of your due date.
- The Stage I **Form C** is required for existing Stage I systems that have **not** been substantially modified.
- If you installed a new Stage I fuel dispensing facility, or substantially modified an existing Stage I system, you are required to submit a Stage I **Form A**.
- The Form A and Form C are completed by **both** the Stage I testing company and the Stage I facility responsible officials.

6. **Annual Fuel Dispensing Facility Compliance Fee.**

- Stage I facilities are subject to an annual Compliance Fee (with the exception of Municipal facilities and most State and Federally owned facilities).
- The annual compliance fee will be mailed to your facility or business mailing address every fall (typically late November to early December).

7. **If you are the new owner of the underground storage tanks (USTs) you must complete and submit an updated UST Facility Registration form.**

- Please see the following MassDEP website link for the Underground Storage Tank (UST) Program: http://www.mass.gov/eea/agencies/massdep/toxics/ust/
- The **original signed** UST Facility Registration form needs to be mailed to the MassDEP UST program. A **copy** of the UST Facility Registration form must be mailed to the local fire dept.

8. **Gasoline Tanks that are Temporarily Out of Service, Permanently Closed in Place, or Removed.**

- If **all** tanks are **temporarily out of service** or **permanently closed in place** you must submit a Stage I Closure Form F and a UST Facility Registration form.
- If **all** tanks have been **removed** you must submit a Stage I Closure Form F and a UST Facility Registration form.
- **Please note:** The MassDEP UST program will be replacing the current FP-290 & FP-290R form with a new **UST Facility Registration form** in the spring of 2015.

9. **Review MassDEP Stage I Regulation 310 CMR 7.24(3).**

- To understand **all** of the Stage I program requirements you must review the Stage I regulation.

The applicable Stage I forms (Form A, C, and E), the Stage I Weekly Inspection & Compliance Guidance Manual, Stage I Regulation, Stage I Testing Company list, and additional guidance documents can be downloaded from the Stage I/II website:

http://www.mass.gov/eea/agencies/massdep/air/programs/stage-ii-vapor-recovery.html

Stage I System Training

Training Requirements

Stage I System owner/operators and their employees who perform the required visual inspections of the Stage I system must be trained in the correct installation, operation, and maintenance of their Stage I system.

- Only persons who have been trained can conduct Weekly Stage I Inspections.
- Training is self-training.
- You can train your employees and have them sign the enclosed Stage I Training Log when training is complete.
- MassDEP recommends that at least two persons be trained for each Stage I facility.
- MassDEP does not require or issue Stage I Training Certificates.

Stage I Training Log – Upon completing Stage I System training, a log of all current persons trained to perform Stage I visual inspections must be maintained on site at the Stage I facility. The log must include the following: the date training completed, the person's printed name and signature (see Stage I Training Log on page 32).

Training Resources

The required training should be completed by reviewing:

- Stage I system guidance materials presented in this training manual.
- CARB Executive Orders for your applicable Stage I system.
- Manufacturers Guidance for your Stage I system or components.

CARB Executive Orders

CARB Executive Orders contain the terms and conditions by which a Stage I system is correctly installed, operated, and maintained, as well as a list of components (spill buckets, rotatable adaptors, etc.) approved for use with the installed Stage I system.

Copies of your Stage I system's currently applicable CARB Executive Order can be obtained from the CARB Web Page:

- CARB Orders for Stage I systems with **underground** storage tanks:

  http://www.arb.ca.gov/vapor/eo-evrphaseI.htm

- CARB Orders for Stage I systems with **aboveground** storage tanks:

  http://www.arb.ca.gov/vapor/eo-astphasei.htm

Identifying Your Stage I System

The CARB Executive Order number or Stage I System Type for your Stage I system can be obtained from the following sources:

- Your facility's currently applicable Stage I Compliance Certification Form;
- Your Stage I Compliance Testing Company or installation contractor; or
- The MassDEP Stage I Program hotline (617-556-1035)

Stage I Vapor Recovery

Stage I Vapor Recovery refers to the vapor recovery control system of a fuel dispensing facility's gasoline storage tanks. Stage I vapor recovery components are installed on the tank and they are designed to contain the vapors in the tank.

Stage I vapor recovery works as follows; when gasoline is delivered to a facility's gasoline storage tanks, the level of fuel in the storage tanks rise, forcing the vapors in the storage tank back, through the Stage I system, to the fuel delivery truck's tanks. The tank truck then returns to the gasoline terminal where the vapors are collected and condensed back to gasoline (See Diagram 1, page 25).

Stage I Applicability

Stage I vapor recovery control <u>is</u> required for:

- Facilities that dispense motor vehicle fuels which include gasoline and gasoline/alcohol blends.
- Gasoline tanks with a capacity of 250 gallons or greater
- Underground storage tanks (USTs), aboveground storage tanks (ASTs), and mobile truck refuelers.
- Public or private use

Stage I vapor recovery control is <u>not</u> required for:

- **Farms** with gas tanks less than 550 gallons are exempt from the Stage I requirements but a submerged fill pipe is required.
- **Auto salvage yard** gas tanks are exempt from the Stage I requirements but a submerged fill pipe and a Pressure Vacuum (P/V) vent valve are required.

Coaxial and Dual-Point Stage I Vapor Recovery

There are two types of Stage I vapor recovery system designs; coaxial and dual-point.

Coaxial Stage I: Gasoline tanks with coaxial Stage I have a single product fill/vapor return connection where gasoline is delivered and vapors are extracted. The coaxial tank drop tube has an inner pipe for gasoline delivery, and an outer pipe that recovers vapors collected in the tank (see Diagram 2. on page 26).

Dual-Point Stage I: Gasoline tanks with dual-point Stage I have a single product fill connection for gasoline delivery and a separate connection for vapor extraction (see Diagram 3. on page 27).

CARB Stage I Systems

The California Air Resources Board (CARB) started approving Stage I systems in 1976. MassDEP required the installation of CARB Stage I systems starting in 1980.

There are two types of CARB Stage I Systems;

- Pre-EVR Stage I - (1976 – 2000)
- Enhanced Vapor Recovery (EVR) Stage I - (2001 to present)

Pre-EVR Stage I Systems

Pre-EVR Stage I systems are Stage I systems that were certified by CARB between 1976-2000 and are no longer approved for use in California. Under the newly amended Stage I regulation MassDEP no longer allows the installation of Pre-EVR Stage I systems.

Enhanced Vapor Recovery (EVR) Stage I Systems

Enhanced Vapor Recovery (EVR) Stage I refers to a new generation of CARB certified Stage I systems that meet stricter control standards for Stage I vapor recovery. Under the newly amended Stage I regulation MassDEP has adopted the CARB Stage I EVR requirements for all new Stage I system installations.

MassDEP Approved Stage I EVR Systems

Pre-EVR/EVR Stage I System - is a **hybrid** Stage I system with both pre-EVR and EVR Stage I components. An example of a Pre-EVR/EVR Stage I system is a Stage II facility that decommissioned their Stage II equipment and installed the required EVR product and vapor rotatable adaptors and EVR Pressure Vacuum (P/V) vent valves at the time of Stage II decommissioning.

Pre-EVR/EVR Stage I Systems are **temporary** Stage I systems that must be changed over to a **MassDEP Approved Stage I EVR system** by the Stage I EVR Installation deadline.

Stage I EVR Deadline – Refer to "Stage I EVR Installation Deadlines", page 13.

MassDEP Approved Stage I EVR systems - Under the newly amended Stage I regulation there are two approved Stage I systems;

- CARB EVR Stage I System
- Component EVR Stage I System

CARB EVR Stage I System - is a Stage I system where **all** components are listed and approved under a **single** Stage I EVR CARB Executive Order. There are currently five CARB Certified EVR Stage I systems for **underground storage tanks**, (see Table 1. below).

CARB EVR Stage I Systems must be installed, repaired, or modified in accordance with the terms and conditions with any of the CARB Executive Orders listed in Table 1. below.

Component EVR Stage I System- is a Stage I system installed with only EVR components that are approved and listed in **any of the five** CARB Certified EVR Executive Orders listed in Table 1. below. The Component EVR system is also known as a "mix and match" EVR system.

Component EVR Stage I Systems must be installed, repaired, or modified in accordance with the terms and conditions of the applicable CARB Executive Orders listed in Table 1. below and manufacturers' guidance.

Table 1. CARB Certified EVR Stage I Systems for USTs

CARB Number	CARB Executive Order Name
VR-101-N	Phil-Tite
VR-102-O	OPW
VR-103-G	EBW
VR-104-G	CNI Manufacturing
VR-105-D	Emco Wheaton Retail

Aboveground Storage Tank (AST) EVR Stage I Systems

There are two CARB EVR certification processes for ASTs;

- Standing Loss Control, and;
- CARB Executive Order certification.

Standing Loss Control

All AST systems have to meet Standing Loss Control for "fugitive emissions". Standing

loss control measures minimize gasoline emissions from ASTs located in direct sunlight. There are standing loss control measures for new ASTs (certified protected/insulated tanks), and for existing ASTs (single-wall and uncertified protected tanks).

VR-301: For Existing AST Installations – VR-301 applies to existing AST Stage I systems that were installed before 1/2/15. For an existing AST to meet the standing loss control guidelines the AST must have the following:

- EVR Pressure/Vacuum Vent Valves – An EVR P/V valve must be installed on the tank vent line.
- Certified Paint or Finish - ASTs must be coated with a certified paint or have an aggregate finish depending on tank manufacturer, see Table 2. below.

VR-302 – For New AST Installations – VR-302 applies to new AST Stage I systems installed after 1/2/15. For a new AST to meet the standing loss control guidelines the AST must have the following:

- EVR Pressure/Vacuum Vent Valve – An EVR P/V valve must be installed on the tank vent line.
- Certified Paint or Finish - ASTs must be coated with a certified paint or have an aggregate finish depending on tank manufacturer, see Table 2. below.
- **Please note:** Any new AST installed in Massachusetts after 1/2/15 must be one of the certified protected/insulated ASTs listed in this order.

Table 2. CARB EVR AST Systems and Certified Paints & Finishes

For the following CARB approved AST manufacturers, CARB has tested and certified the following paint colors and tank finishes for standing loss control.

AST Manufacturer	White Paint**	Desert Tan Paint**	Aggregate Finish
Hoover Vault	Yes	Yes	
SuperVault	Yes	Yes	
Fireguard	Yes		
Armorcast	Yes		Yes
Convault*	Yes		
AGT Vault	Yes		

***** Convault tanks with an aggregate finish are currently not tested and certified by CARB to meet the Stage I EVR Standing Loss Control standard and must be painted white.

**** Existing tanks (VR-301) –** Existing protected ASTs specified in Exhibit 1 of VR-301 do not need to be repainted if equipped with the original equipment manufacturer's color, and have been maintained in accordance with the "ARB-Approved Installation, Operation, and Maintenance Manual for the Standing Loss Control Vapor Recovery System of Existing Aboveground Storage Tanks (IOM)". If repainting is necessary per the IOM, the operator shall apply one of the certified coating systems listed in Exhibit 1 of VR-301, or contact the original equipment manufacturer (OEM) and obtain the OEM coating system applied to the tank upon production.

**** New tanks (VR-302)** – New certified protected/insulated ASTs listed in VR-302 should already be painted from the factory with the Original Equipment Manufacturer (OEM) paints, (white or tan).

CARB Executive Orders for AST EVR Systems

There are currently **three** CARB Executive orders for AST EVR systems:

- G-70-216 - for existing older ASTs
- VR-401-D - OPW
- VR-402-B - Morrison Brothers

1. **G-70-216 –** Applies to existing older ASTs that have **any** of the four conditions listed in Table 3. below:

Table 3. G-70-216 - AST Conditions for Existing Older ASTs

AST does not receive gasoline through top fill (direct or remote)
AST does not accommodate an emergency vent
AST has less than three bungs available for vapor recovery components
AST does not have a product fill with a diameter of four inches

If a facility AST **meets** any of the conditions listed in Table 3. Above, then the AST is not currently subject to EVR upgrade requirements. However, at a minimum the AST must meet the Standing Loss Control conditions described in **VR-301.**

If a facility AST does **not meet** any of the conditions listed in Table 3. above, the facility owner/operator must install one of the two CARB Certified Stage I EVR AST systems listed below in Table 4., or they can install a Component AST EVR "Mix and Match" System using Stage I components listed in these two orders.

Table 4. CARB Certified EVR Stage I Systems for ASTs

CARB Number	CARB Executive Order Name
VR-401-D	OPW
VR-402-B	Morrison Brothers

Stage I EVR Installation Deadlines

"Existing" refers to Stage I facilities that were installed prior to the amended Stage I regulation promulgation date of 1/2/15.

Table 5. Stage I EVR Installation Deadlines

Subject	Stage I EVR Deadline
New Stage I Installations	At installation
Existing Dual-Point Stage I systems	1/2/22
Existing Dual-Point Stage I (with Slip-on spill buckets)	1/2/22
Existing Coaxial Stage I systems	When tanks are replaced
Existing Coaxial Stage I (with Slip-on spill buckets)	When tanks are replaced
Aboveground Storage Tanks	See AST section, page 10

Stage I System Maintenance

Properly maintained Stage I systems and components prevent the escape of gasoline vapor from your gasoline storage tanks during delivery of gasoline to your facility and on a daily basis. The Stage I System must be tested, inspected, and maintained to prevent the loss of vapors.

Dual-Point Stage I Vapor Adaptors

The vapor extraction component required for dual-point Stage I systems is called a vapor adaptor or "Dry Break Valve" (see Diagram 4. page 28). The Vapor Adaptor has a spring loaded vapor seal. When inspecting a vapor adaptor press down on the vapor seal and let go. The vapor seal should snap shut making a tight seal. Vapor adaptors that do not close tightly or have leaky vapor seals must be immediately replaced.

Coaxial Stage I Adaptors

There are two types of coaxial adaptors; non-poppeted coaxial, and poppeted coaxial adaptors.

- **Non-poppeted coaxial adaptors –** are vapor adaptors that have an inner pipe for fuel delivery and an outer pipe for vapor collection. When the vapor cap is removed collected vapors will immediately escape. This type of adaptor will not pass the newly adopted pressure decay test (two inch test) which requires that the vapor caps be removed during the test. Facilities must replace the non-poppeted coaxial adaptor drop tubes with poppeted coaxial adaptor drop tubes to pass the two inch test.

- **Poppeted coaxial adaptors –** are coaxial adaptors that have an additional spring loaded fitting. When the vapor cap is removed the spring loaded fitting engages shutting off the vapor path which keeps the collected vapors from escaping. Poppeted coaxial adaptor drop tubes must be installed to pass the newly adopted pressure decay test (two inch test).

Vapor Caps

All product fills and vapor adaptors must be equipped with a Vapor Cap or "Dust Cap". The Vapor Cap keeps the connection clean and prevents vapors from escaping to the air (see Diagram 4. on page 28). Vapor Caps must snap shut making a tight seal and should not spin freely. Vapor Caps that do not snap shut tightly or have leaky vapor seals must be immediately replaced or a new rubber gasket installed.

Rubber Gaskets

A rubber gasket must be installed under each vapor cap and must be in good condition.

Spill Containment Buckets

Spill containment buckets are designed to collect excess gasoline if a tank is overfilled (see Diagram 5. on page 29). Gasoline delivery truck drivers may empty residual gasoline from the delivery hose into the buckets. Consult with your gasoline delivery company to ensure excess gasoline in the delivery hose is drained into the product fill pipe, not the spill bucket.

- **Bucket Lids:** Spill buckets should have a tight fitting lid to prevent the introduction of water and debris.
- **Bucket Maintenance:** Spill buckets must be free of gasoline, water, dirt, leaves, or other debris at all times. Gasoline cannot be left in spill buckets since it will evaporate and is a source of air pollution.
- **Buckets with Drain Valves:** Spill buckets with drain valves can be engaged manually after every fuel delivery to drain gasoline back into the tanks. However Gasoline/water mixtures in spill buckets should not be drained back into the tank.
- **Buckets without Drain Valves:** If the spill buckets do not have drain valves, the gasoline must be removed manually with a hand pump, and drained back into the product fill pipe, or disposed as hazardous waste.
- **Gasoline/Water mixtures:** are considered hazardous waste unless managed in accordance with 310 CMR 30.104(3)(e). Gasoline/water mixtures not managed in accordance with 310 CMR 30.104(3)(e) must be collected in sealed drums with proper labeling in accordance with 310 CMR 30.000 (other than 30.104(3)(e)).

Stage I System Weekly Visual Inspections

The MassDEP Stage I regulation requires all Stage I systems to be visually inspected on a weekly basis (once every seven days) to ensure the system is operating correctly and properly maintained.

- Only persons who have been trained can conduct Weekly Stage I Inspections.
- See the "Stage I System Weekly Visual Inspection Checklist" on page 33.

Safety Precautions When Conducting Stage I Inspections

- Place safety cones around the tank pad area.
- Be aware of moving vehicles while conducting inspections.
- Wear high visibility safety vest, safety goggles, gloves, and steel toe boots.
- Use a spark resistant crowbar or spark resistant screwdriver for opening Spill Containment buckets and Vapor Connection buckets.

Stage I System Weekly Inspection Checklist Instructions

- Enter inspection date in the upper right corner of the checklist.
- Check off the Stage I System Type present at your facility; coaxial or dual-Point Stage I.
- Complete only the Stage I inspection questions for your applicable Stage I system type; coaxial or dual-point Stage I.
- Answer all questions and check either "Yes" or "No" for each question.
- **Please Note:** If your answer to an inspection question has an asterisk (*) next to it, then the component is incorrectly installed, non-functioning, **or** broken, and therefore in non-compliance with applicable Stage I program requirements.
- In the right-hand column of the Inspection Checklist, indicate all Stage I components that were repaired or replaced and the date completed.
- The Stage I System Inspection Checklist must be fully completed, signed, and dated by the **trained** person performing the inspection.
- If you do not understand an inspection checklist question please contact the MassDEP Stage I program at 617-556-1035.

Actions to take when damaged components are discovered

If incorrectly installed, non-functioning, or broken Stage I components are identified during a weekly inspection, the following steps must be taken:

- Immediately repair or replace the component; or

- If repairs or replacements cannot be made immediately, repair or replace the component within 30 days of the visual inspection date, or

- If a component cannot be repaired or replaced within 30 days of the visual inspection date, the transfer of motor vehicle fuel into the motor vehicle fuel storage tank equipped with the incorrectly installed, non-functioning or broken component is prohibited until the component is repaired or replaced.

- **Please Note:** If any Stage I system component is replaced, it must be replaced with a CARB EVR component and installed in accordance with applicable Executive Orders and manufacturers' guidance.

  Exception: Coaxial Stage I components and slip-on spill buckets may be replaced with the same component since there is no EVR replacement for these components.

Stage I Compliance Testing Requirements

Table 6. Required Annual Tests for Stage I Systems

Please Note: All applicable tests are required at Stage I system installation, at substantial modification of the Stage I system, and annually thereafter.

Test Name	CARB Test Method	Test Description
Pressure Decay Test (2 inch test)	TP-201.3	Quantifies vapor tightness of the vapor recovery system.
Vapor Space Tie Test	TP-96-1	Verifies if the underground tanks have been manifolded (connected by vapor piping). Multiple tanks must be manifolded together with vapor piping to distribute the collected vapors evenly to all tanks.
Pressure/Vacuum Vent Valve Test	TP-201.1E	Determines if the Pressure/Vacuum Vent Valves are opening at the correct pressure setting and closing at the correct vacuum setting.
Static Torque Rotatable Adaptor Test [1]	TP-201.1B	Quantifies the amount of static torque required to start the movement of a rotatable Phase I adaptor and to ensure 360-degree rotation.
Leak Rate of Drop Tube / Drain Valve Test [1,2]	TP-201.1C	Quantifies the leak rate of drop tube/drain valve assembly when the spill container drain valve is configured to pass liquid into the drop tube.
Leak Rate of Drop Tube / Overfill Prevention Test [1,2]	TP-201.1D	Quantifies the leak rate of overfill prevention devices located in the Phase I product drop tube on two-point Phase I systems. When applicable, this procedure is also used to quantify the leak rate of a spill container drain valve which passes liquid directly into the Phase I drop tube.

1 Test required only for CARB EVR Stage I components.

2 Testing Company must conduct either TP-201-1C **or** TP-201.1D depending on system configuration.

TP-201-1C and TP-201.1D are **not** required if the EVR buckets have no drain valves **and** the EVR drop tubes do not have overfill prevention devices.

Actions to take when Stage I Tests Fail

Any owner/operator of a motor vehicle fuel dispensing facility whose Stage I system fails one or more required in-use compliance tests (310 CMR 7.24(3)(e)1.), shall:

- Immediately repair or replace the incorrectly installed, non-functioning or broken component in accordance with the applicable Executive Orders and manufacturers' guidance;
- If any Stage I system component is replaced, it shall be replaced with a CARB EVR component (except coaxial components and slip-on spill buckets may be non-EVR) and installed in accordance with applicable Executive Orders and manufacturers' guidance;

- Retest and pass each failed test; and
- Submit to the Department an Annual In-Use Compliance Certification with passing test results for all required tests on or before the facility's Annual In-Use Compliance Certification submittal due date or within 30 days of the date of the first passing test result, whichever occurs first.
- If the Stage I system failed one or more required in-use compliance tests and the system could not be immediately repaired you must **cease the transfer of motor vehicle fuel** into the motor vehicle fuel storage tanks equipped with the failing Stage I system until the system is repaired in accordance with the applicable CARB Executive Orders and manufacturers' guidance and all applicable compliance testing was conducted and passed.

Stage I Certification Forms

A Stage I Certification form must be completed and submitted to MassDEP annually by the Stage I Responsible Official(s).

There are four Stage I Certification forms; Forms A, C, D1 and D2.

Form A - Installation Certification Form

A Form A (testing required) must be completed and submitted to MassDEP for new fuel dispensing facility installations and substantial modifications of existing Stage I facilities.

Form C - Annual Certification Form

The Form C (testing required) is the primary Stage I Certification form that MassDEP mails to each facility annually.

Form D1 & D2 - Alternative Annual Certification Forms

If you pass all Stage I Form C certification tests on the first attempt, two years in a row, and submit your Stage I Form C's on or before the due date, you will receive a Form D1 the following year.

Form D1- (no testing required)

If you submit your Form D1 on or before the due date, you will receive a Form D2 the following year.

Form D2 - (testing required)

If you pass all Form D2 certification tests on the first attempt, and submit your Stage I Form D2 on or before the due date, you will receive a Form D1 the following year.

If you fail any of your Form D2 certification tests on the first attempt, or submit your Stage I Form D2 after the due date, you will go back to the Form C cycle and will receive a Form C the following year.

Stage I Certification Form Mailings and Due Dates

- Stage I Forms C, D1, & D2 are mailed to the Stage I Responsible Official #1 four months before the **due date**.
- **Due dates** are determined by the document submittal date (postmarked date for forms submitted by mail or the "sent" date for forms submitted by email), not the test date.
- If you submit your certification form within 30 days before your due date, the due date will not change the following year.

Recordkeeping Requirements

Under the MassDEP Stage I regulation, all Stage I facilities must maintain on-site in a centralized location in either hard copy or electronic format the following records:

- **Stage I Training Log -** Training Log of all persons trained to perform visual inspections of the Stage I System.
- **Weekly Inspection Checklists -** All of the weekly inspection checklists for the prior rolling twelve-month period.
- **Stage I Certification Forms -** A copy of the most recent In-Use Compliance Certification or, if more recent, a copy of the Stage I system's Installation/Substantial Modification Certification.
- **Stage I Testing Company Test Results -** A copy of compliance testing company Stage I test results for all tests performed during the prior rolling twelve-month period.

Please Note: MassDEP recommends that hard copies of the above records be maintained in a folder or binder.

Definitions: Routine Maintenance, Minor and Substantial Modification

STAGE I ROUTINE MAINTENANCE, as used in 310 CMR 7.24(3), means the regular installation, repair or replacement of one or more Stage I system components, including, but not limited to, bucket plow rings; "slip-on" spill containment and dry break buckets; "O" rings and seals; product adaptors; vapor adaptors; product caps; vapor caps; monitor caps; riser caps; drain valves; and pressure/vacuum vent valves.

STAGE I MINOR MODIFICATION, as used in 310 CMR 7.24(3), means the installation, repair or replacement of one or more Stage I system components that is not substantial, including, but not limited to, product drop tubes; overfill prevention devices; "screw-on" spill containment and dry break buckets.

STAGE I SUBSTANTIAL MODIFICATION, as used in 310 CMR 7.24(3), means, the installation, repair or replacement of one or more Stage I system components requiring excavation below a shear valve or tank pad including, but not limited to, vent piping; vapor space tie bar; dual-point or co-axial Stage I systems; or motor vehicle fuel storage tanks.

Table 7. Routine Maintenance, Minor and Substantial Modifications

MODIFICATION/REPAIR	TESTING REQUIRED
A. ROUTINE MAINTENANCE For routine maintenance and repairs, compliance testing is not required. Record of repairs is required to be maintained on site in applicable maintenance logs.	
• Replace bucket plow ring	No test
• Replace "slip-on" spill or dry break "vapor" bucket	No test
• Replace "O" rings and seals	No test
• Replace/repair submersible pump/suction pipe	No test
• Replace/repair product adaptor, vapor adaptor, fill caps, vapor caps, monitor caps, riser caps, drain valves	No test
B. MINOR MODIFICATIONS For minor modifications and repairs, compliance testing is required to be performed and passed, but submittal of a Stage I Form A to MassDEP is **not** required. Records of repairs and test results are required to be maintained on site in applicable logs.	
• Replace product drop tube	Pressure decay
• Replace "screw-on" spill or dry break "vapor" bucket.	Pressure decay
• Isolate diesel tank or other motor vehicle fuel storage tank not in use from Stage I system.	Pressure decay
• Replace/repair overfill prevention device.	Pressure decay
C. SUBSTANTIAL MODIFICATIONS For substantial modifications and repairs, all applicable tests are required to be performed and passed ("full system test") and a fully completed Stage I Form A must be submitted to MassDEP prior to commencing system operation. Records of repairs and testing are required to be maintained on site in applicable logs.	
• Excavate below shear valve or tank pad to repair, replace or install vent piping, vapor space tie bar, two-point or coaxial Stage I systems.	Full system test (all applicable tests)
• Excavate below shear valve or tank pad to repair or replace Tank.	Full system test (all applicable tests)
• Replace/repair >50% of the Stage I vapor recovery system	Full system test (all applicable tests)
• Replace/repair Aboveground Storage Tank	Full System test (all applicable tests)
D. Facilities currently exempt from Stage I requirements. (To determine Stage I installation applicability refer to 310 CMR 7.24(3)(a)2., "Distribution of Motor Vehicle Fuel".	

Notifying MassDEP - Change of Owner/Operator

Notification for new owner/operator of a Stage I facility

If you are a new owner/operator of a Stage I facility, you are required to complete and submit a **Stage I Form E** to MassDEP within 30 days of becoming an owner/operator.

The Stage I Form E must be completed and signed by a designated **Stage I System Responsible Official #1.**

Ending your role as an owner/operator of a Stage I facility

If you are no longer the owner/operator (O/O) of a Stage I facility you are required to notify MassDEP in writing.

A **letter** is required notifying MassDEP of the following:

- The **Date** that your owner/operator (O/O) role **ended.**
- Contact Names of new Stage I O/O
- Phone numbers and email address for new Stage I O/O
- Mailing address for new Stage I O/O
- New company and/or business name

PLEASE NOTE! If you do not notify MassDEP about ending your O/O role you will continue to receive:

- Stage I certification forms
- Stage I fees
- And possible enforcement!

Notifying MassDEP - Stage I System Closure & Tank Closure

If **all** gasoline tanks are **temporarily out of service** or **permanently closed in place** you must submit the following forms to MassDEP:

- Stage I Closure Form F
- UST Facility Registration Form

If **all** gasoline tanks have been **removed** you must submit the following forms to MassDEP:

- Stage I Closure Form F
- UST Facility Registration Form

Please note: The MassDEP UST program will be replacing the current **FP-290** & **FP-290R** form with a new **UST Facility Registration form** in the spring of 2015.

Aboveground Storage Tank or Mobile Refueler Closure - If your facility has an AST or a Mobile Refueler then only the Stage I Closure Form F is required.

The Stage I Closure Form F and the UST Facility Registration form can be downloaded from the MassDEP website links provided on page 23.

Fuel Dispensing: Topping Off, Spill Prevention, and Clean Up

Topping off results in Gasoline Spills

Overfilling or "topping off" a gas tank can result in gasoline spillage. Gasoline contains many toxic compounds including carcinogenic compounds that are harmful to public health and the environment.

Gasoline Dispensing Nozzles and hoses that are leaking gasoline

Gasoline dispensing nozzles contain an automatic shut-off valve to prevent over filling of gas tanks. If a facility's nozzles fail to shut off properly, or if the nozzles or hoses leak gasoline, then the leaking gasoline becomes a violation of MassDEP's Hazardous Waste regulation (310 CMR 30.000).

Cleaning up Gasoline Spills and Disposal of Gasoline Absorbents

All gasoline spills should be cleaned up immediately. An absorbent such as "Speedy Dry" should be used to limit gasoline contamination to the environment. Disposal of gasoline absorbents must be done in accordance with Massachusetts Hazardous Waste regulations (see 310 CMR 30.302: Determination of Whether a Waste is Hazardous). If the gasoline/absorbent is determined to be hazardous, it must be collected in sealed drums with proper labeling in accordance with 310 CMR 30.000.

MassDEP & Other State & Local Resource Contacts

MassDEP Stage II Vapor Recovery Program:

- MassDEP Hotline: 617-556-1035 - Stage II Program - extension 1
- Website:

  http://www.mass.gov/eea/agencies/massdep/air/programs/stage-ii-vapor-recovery.html

MassDEP Underground Storage Tank (UST) Program:

- MassDEP Hotline: 617-556-1035 - UST Program - extension 2
- UST Regulations (527 CMR 9.00), Third Party UST Inspection Program
- Website: http://www.mass.gov/eea/agencies/massdep/toxics/ust/

MassDEP Hazardous Waste Generator Status:

- If your facility is no longer a hazardous waste/waste oil generator, or your hazardous waste/waste oil status has changed please contact Michael Hurley at 617-292-5633, or, by email at: Michael.M.Hurley@state.ma.us

MassDEP Guidance Regarding Automotive Service Stations; hazardous wastes, waste oil, handling used oil filters, waste tires, floor drains, space heaters, and more:

- Website:

  http://www.mass.gov/eea/agencies/massdep/service/business/motor-vehicle-fueling-service-and-repair.html

- Contact your MassDEP regional office for additional guidance.

MassDEP Bureau of Waste Site Cleanup (cleanup of oil and hazardous material spills):

- 24 Hour number – 888-304-1133 - to report releases of oil and hazardous materials to the Emergency Response Program
- Leaking Underground Storage Tank Program - 617-292-5887
- Website: http://www.mass.gov/eea/agencies/massdep/cleanup/

MA Department of Fire Services:

- 978-567-3100 - Regulation 527 CMR 5.00 - Operation & Maintenance of Garages and Service Stations
- 527 CMR Regulation website:

  http://www.mass.gov/eopss/agencies/dfs/dfs2/osfm/fire-prev/527-cmr-index.html

MassDEP & Other State & Local Resource Contacts: (Cont.)

MA Department of Revenue:

- 21J Underground Storage Tank Program reimbursement for eligible UST facilities
- Certificate of Compliance (COC)
- 617-626-2600
- Website: http://www.mass.gov/dor/businesses/programs-and-services/underground-storage-tank-program/

MA Division of Standards:

- Retail Gasoline and Oil Dealers License & Weights and Measures Enforcement
- 617-727-3480
- Website: http://www.mass.gov/ocabr/government/oca-agencies/dos-lp/

Local Fire Department: Contact your local fire department for the following UST or AST permits and approvals:

- UST or AST installation and removal permits

Diagram 1. Stage I Vapor Recovery

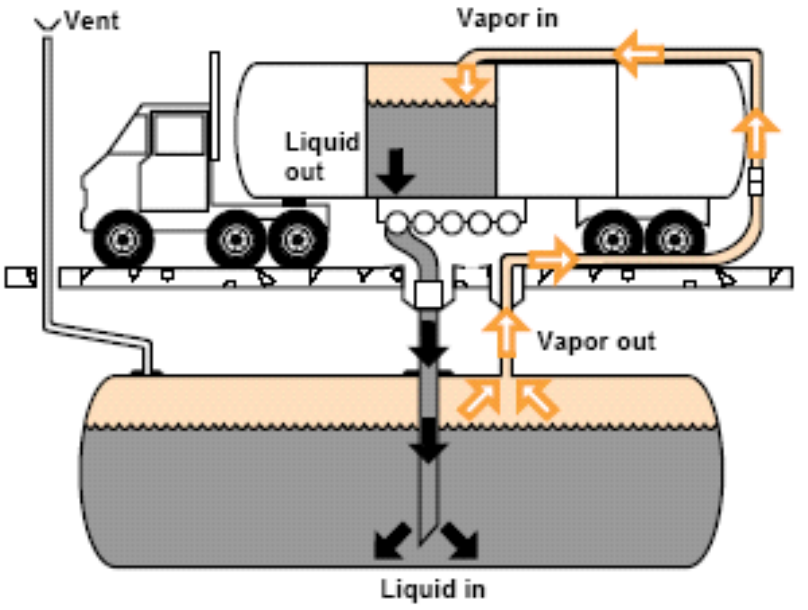

Diagram 2. Coaxial Stage I Vapor Recovery

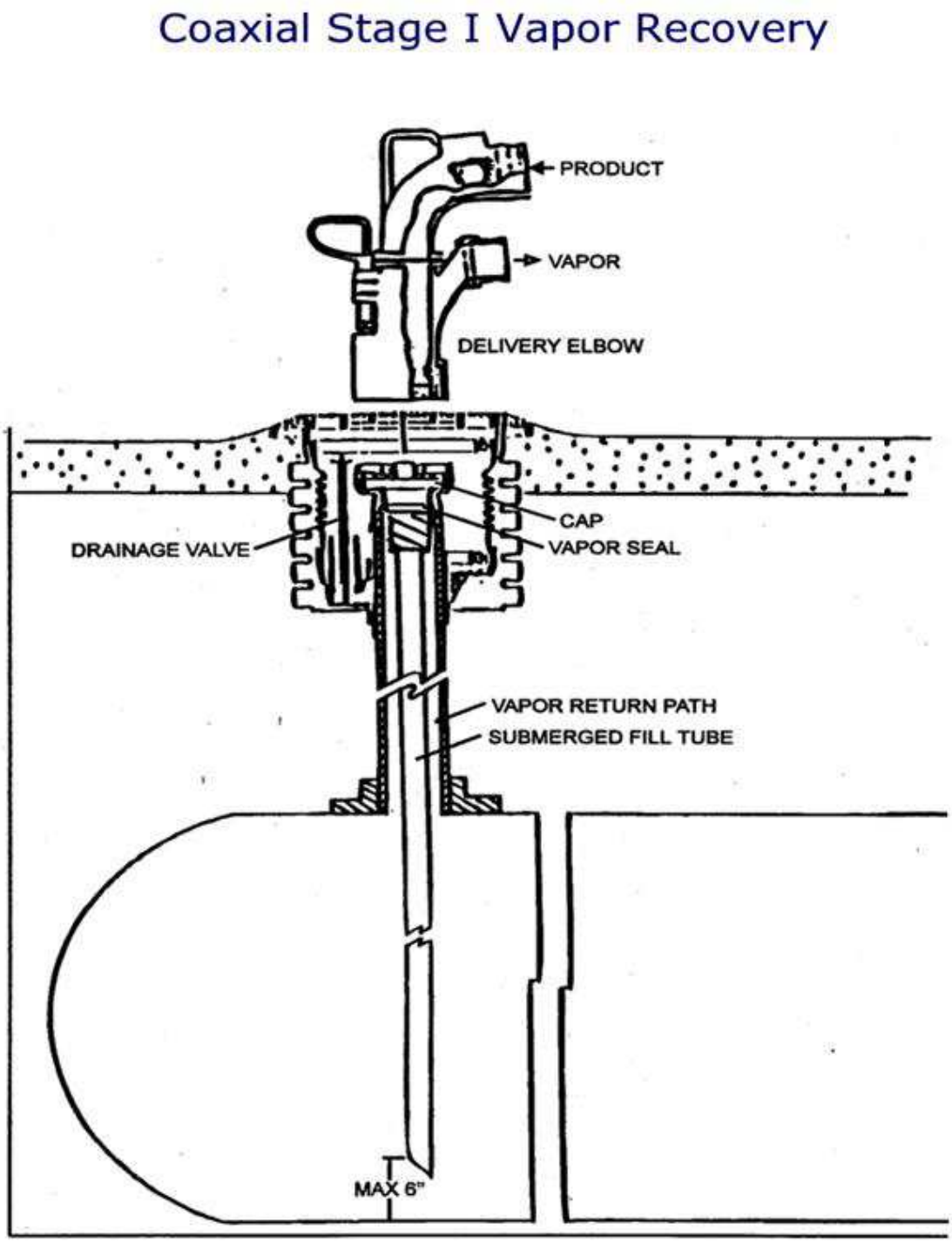

Diagram 3. Dual-Point Stage I Vapor Recovery

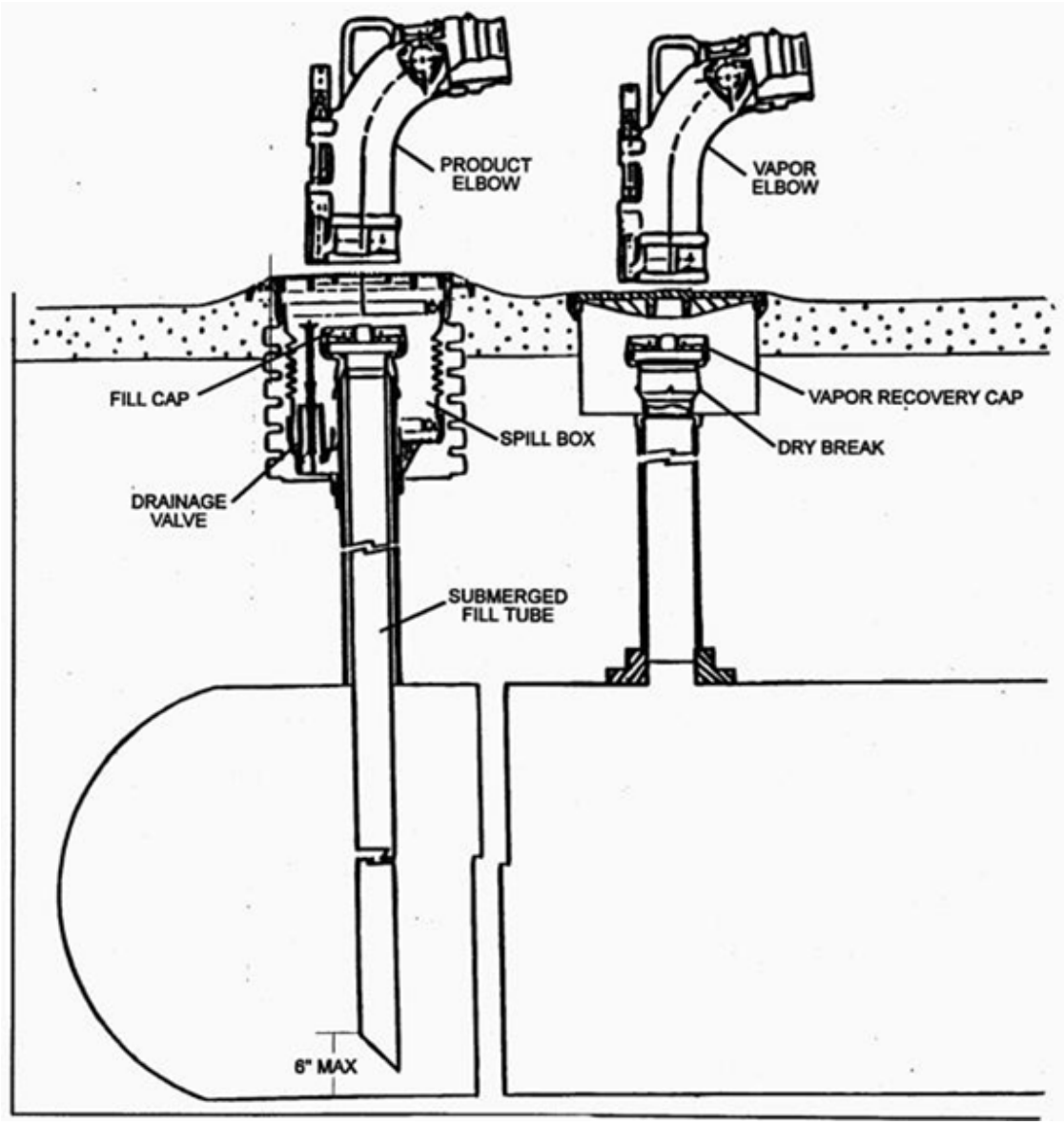

Diagram 4. Dual-Point Stage I Vapor Adaptor & Vapor Cap

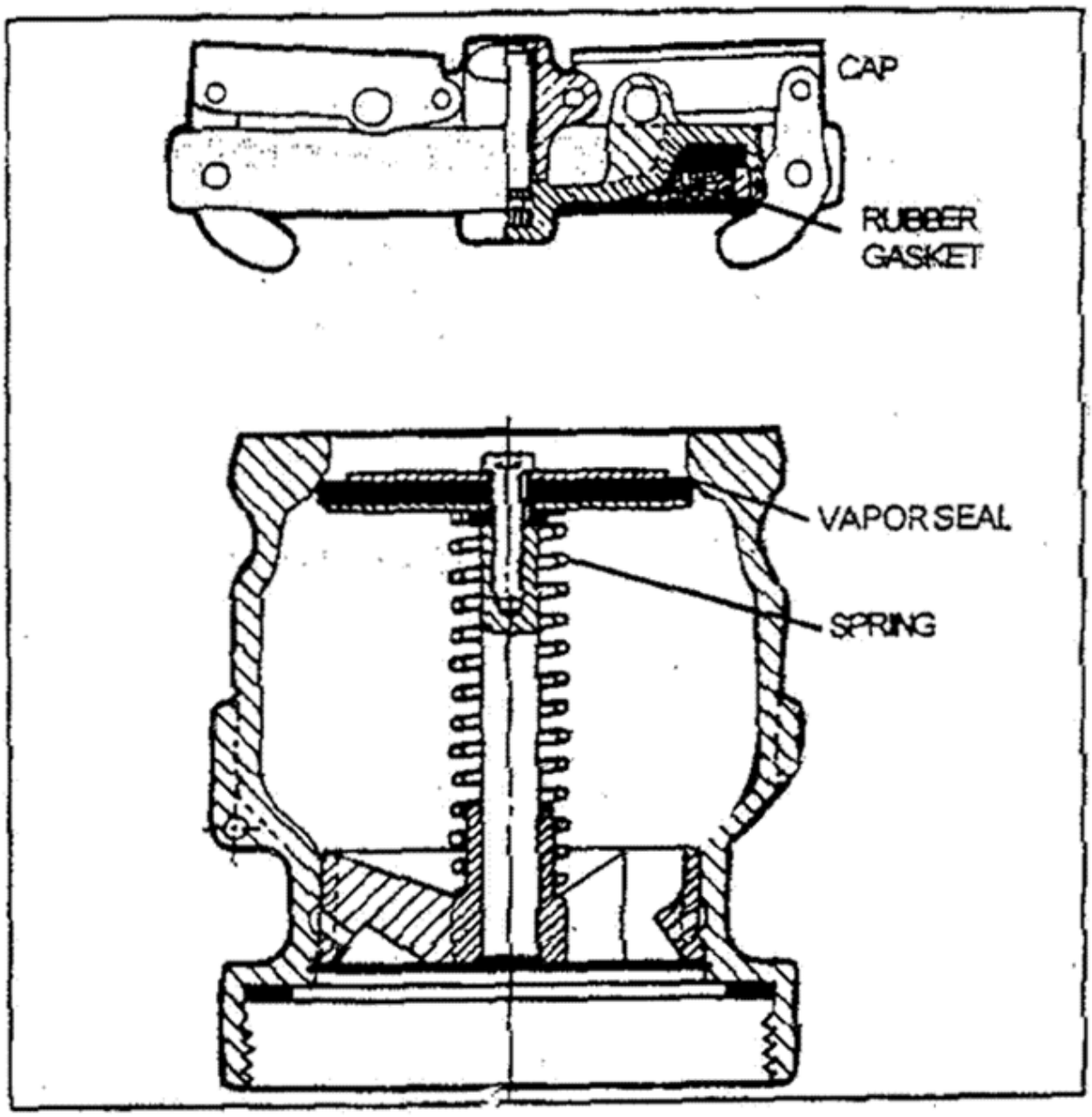

Diagram 5. Spill Containment Bucket for Product Fill

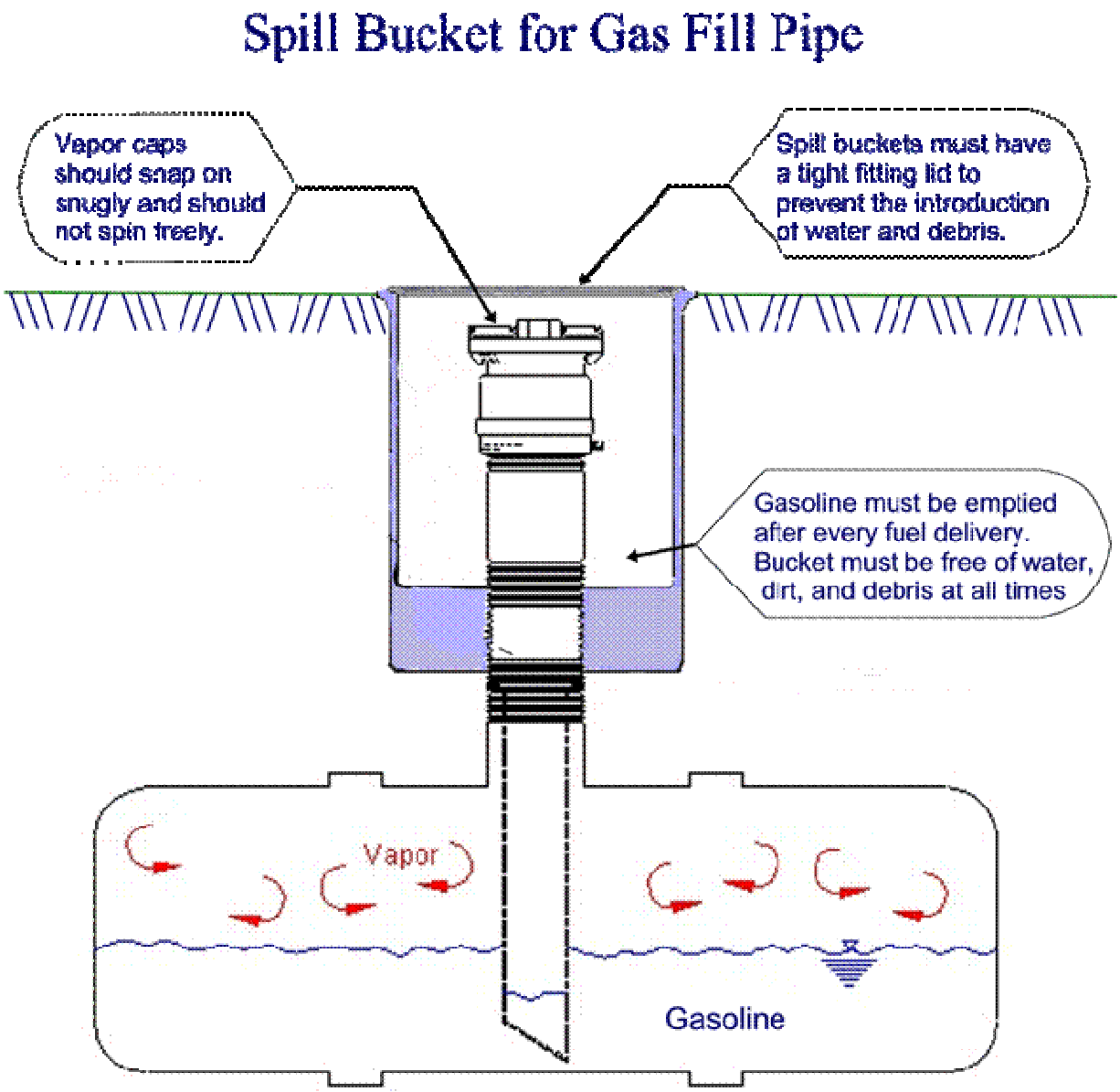

Diagram 6. Stage I EVR – Sample Product Installation

Figure 2A
Typical Product Installation Using OPW System[5]

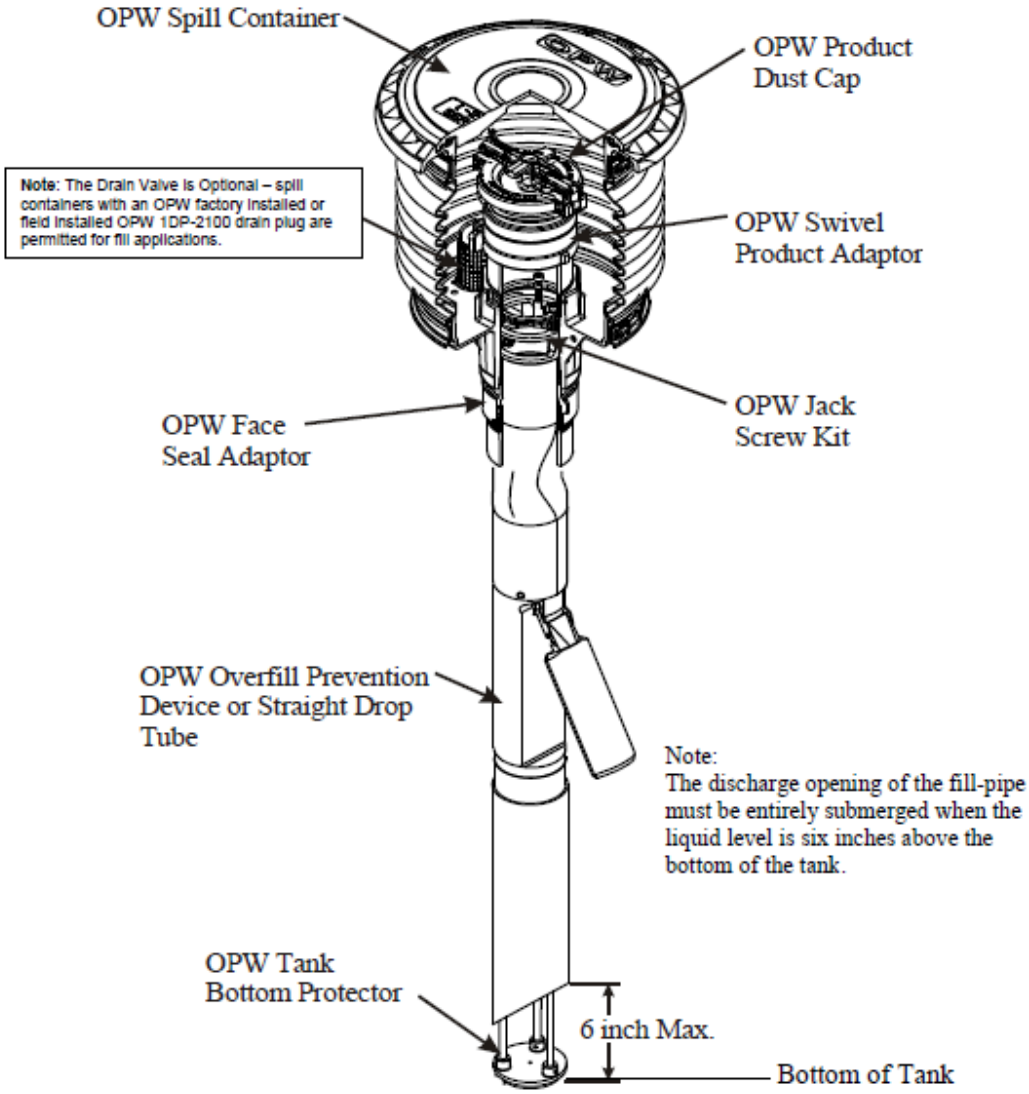

Diagram 7. Stage I EVR – Sample Vapor Installation

Figure 2B
Typical Vapor Installation Using OPW System

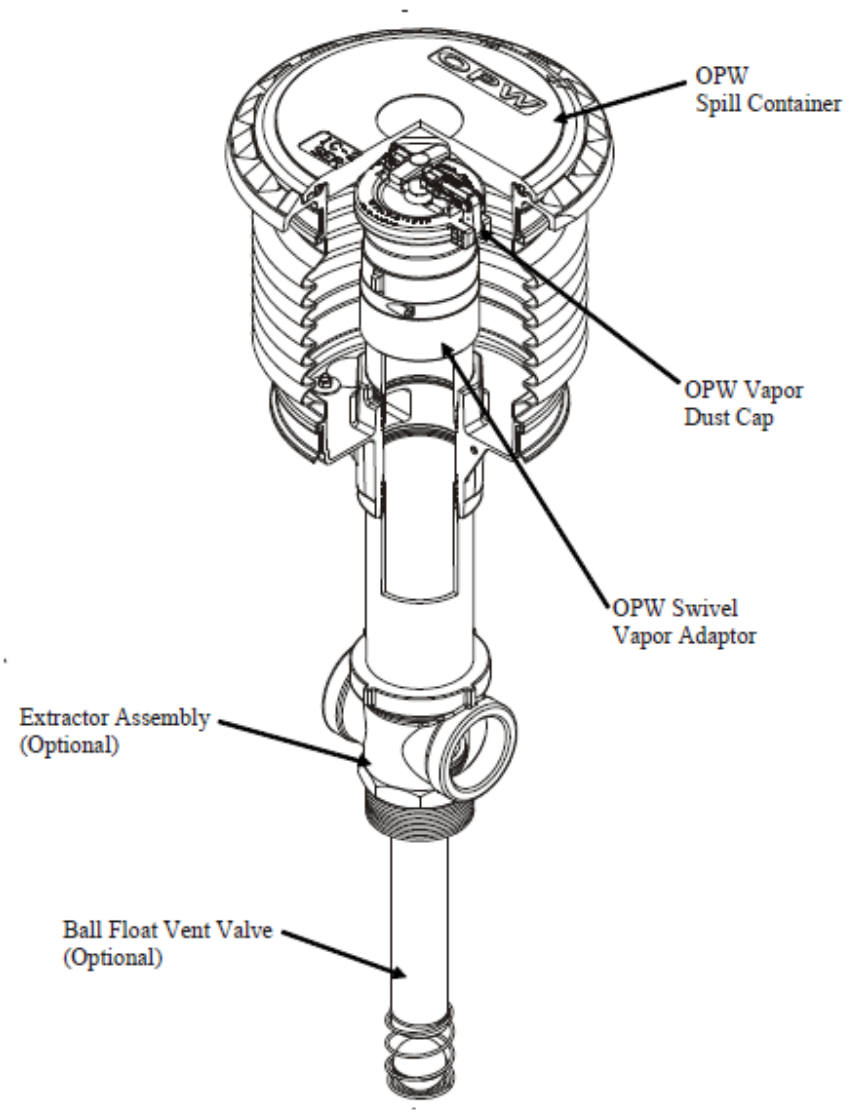

MassDEP Stage I Training Log

Date Trained	Name of employee trained (Please Print)	Signature

MassDEP Stage I System Weekly Inspection Checklist		**Date: _____**
1. Stage I System Type: **Coaxial** Stage I or **Dual-Point** Stage I Vapor recovery installed? (See Diagrams 1 & 2, pgs. 25-26)	☐ Coaxial ☐ Two Point	**If "*", Indicate Stage I components repaired or replaced and date completed.**
2. **Coaxial** Stage I Systems:		
• Poppeted Coaxial adaptor opening bent, crushed, or fumes escaping?	☐ Yes* ☐ No	
• Vapor caps installed on all coaxial fill/vapor adaptors?	☐ Yes ☐ No*	
• Vapor caps firmly locked so they don't swivel freely?	☐ Yes ☐ No*	
• Rubber gaskets installed underneath all vapor caps?	☐ Yes ☐ No*	
• Rubber gaskets cracked, torn, or worn out?	☐ Yes* ☐ No	
• Gasoline, water, dirt, or leaves in the spill containment bucket? (See Diagram 5, page 29)	☐ Yes* ☐ No	
3. **Dual-Point** Stage I Systems:		
• Pre-EVR Product & Vapor Adaptors in good condition? (See Diagram 4, pg 28).	☐ Yes ☐ No*	
• EVR Product & Vapor Rotatable Adaptors in good condition?	☐ Yes ☐ No*	
• Vapor caps installed on all product & vapor rotatable adaptors?	☐ Yes ☐ No*	
• Vapor caps firmly locked so they don't swivel freely?	☐ Yes ☐ No*	
• Rubber gaskets installed underneath all vapor caps?	☐ Yes ☐ No*	
• Rubber gaskets cracked, torn, or worn out?	☐ Yes* ☐ No	
• Gasoline fumes escaping from Vapor Adaptors when vapor caps are removed?	☐ Yes* ☐ No	
• Gasoline, water, dirt, leaves, or debris in the spill containment buckets? (See Diagram 5, page 29)	☐ Yes* ☐ No	

MassDEP Stage I System Weekly Inspection Checklist		**Date: _____**
Pressure/Vacuum (P/V) Vent Valves EVR P/V Vent Valves installed on all tank vent lines?	☐ Yes ☐ No*	
Vapor Recovery System Repair As a result of the weekly visual inspection, did you find any Stage I system components incorrectly installed, non-functioning or broken?		☐ Yes* ☐ No
If <u>YES</u>, did you: • Immediately repair or replace the components and replace with CARB Enhanced Vapor Recovery (EVR) components (except coaxial components and "slip-on" spill buckets may be non-EVR**); **or**		☐ Yes ☐ No
• If repairs or replacements could not be made immediately, did you repair or replace the components within 30 days of the visual inspection date; **or**		☐ Yes ☐ No
• If the components could not be repaired or replaced within 30 days of the visual inspection date, did you cease the transfer of motor vehicle fuel into the motor vehicle fuel storage tanks equipped with the incorrectly installed, non-functioning or broken components until the components were repaired or replaced?		☐ Yes ☐ No
***** If your compliance question answer has an asterisk (*) than the component is not in compliance. ****** If a coaxial drop tube or a slip-on spill bucket needs to be replaced they can be replaced with the same component. However dual-point Stage I systems with "slip-on" spill buckets must be replaced with Enhanced Vapor Recovery (EVR) "screw-on" spill buckets by the seven year (EVR) installation deadline (1/2/22). Coaxial Stage I systems need to be replaced with a dual-point Stage I EVR system when the tank is replaced.		

Stage I Inspector's Name (Printed) **Stage I Inspector's Signature** **Date**