Exhibit A

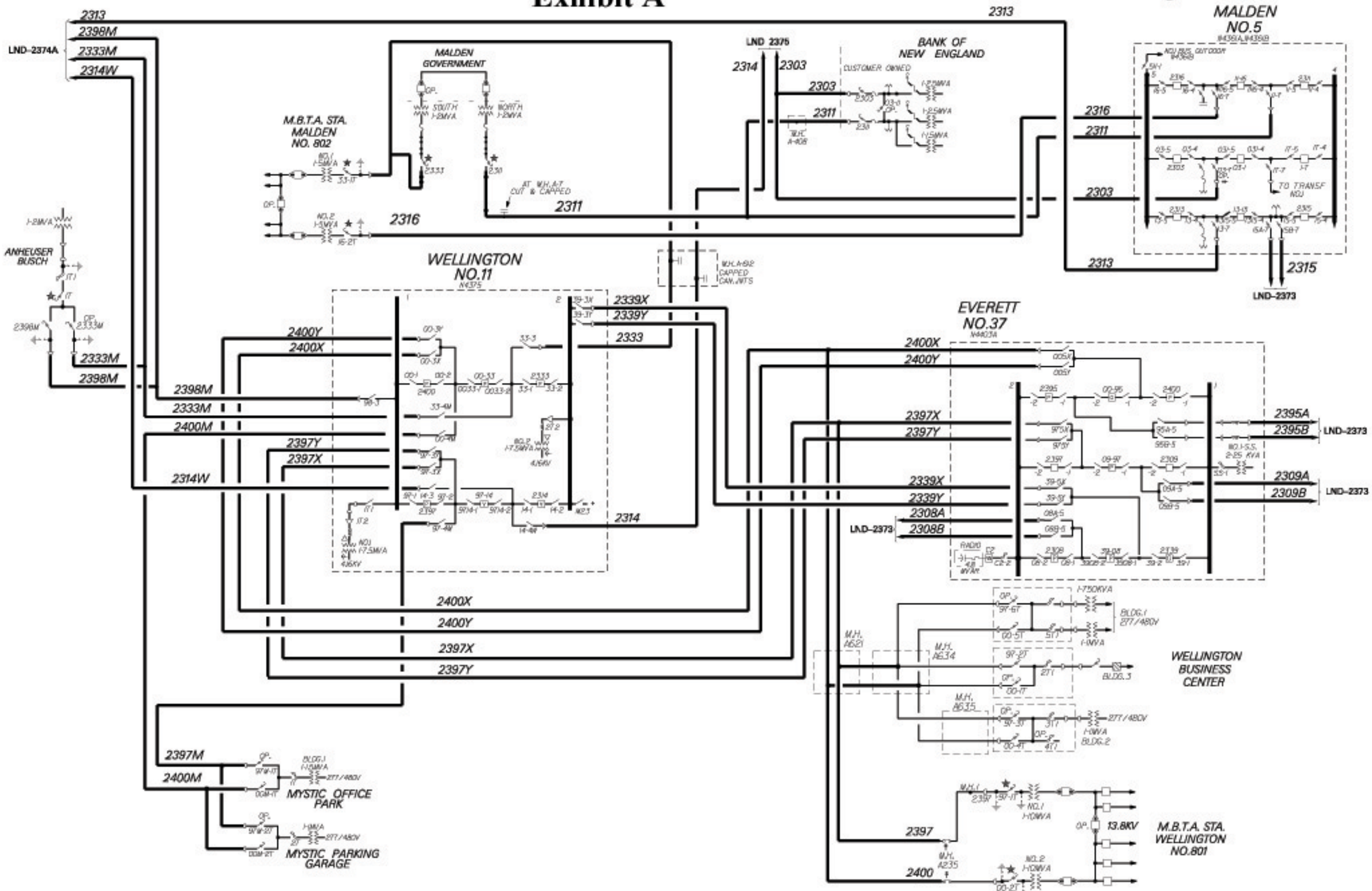

23KV LINES 2303, 2311, 2313, 2314, 2316, 2333, 2339, 2397, 2398 & 2400

NORTH SHORE DISTRICT

10-22-01

LND–2374B