KEEGAN, WERLIN & PABIAN, LLP

ATTORNEYS AT LAW
265 FRANKLIN STREET
BOSTON, MASSACHUSETTS 02110-3113

(617) 951-1400

TELECOPIERS:
(617) 951-1354
(617) 951-0586

DAVID S. ROSENZWEIG
E-mail: drosen@kwplaw.com

March 12, 2004

Mary Cottrell, Secretary
Department of Telecommunications and Energy
One South Station, 2nd Floor
Boston, Massachusetts 02110

Re: NSTAR Electric, D.T.E. 03-121

Dear Secretary Cottrell:

Enclosed for filing in the above-referenced matter is an original and six (6) copies of NSTAR Electric's responses to the Information Requests on the accompanying list.

Thank you for your attention to this matter.

Very truly yours,

David S. Rosenzweig

David S. Rosenzweig

Enclosures

cc: William Stevens, Hearing Officer
John-Cope Flanagan, Hearing Officer
Service List

Response to Information Requests

Information Request NEDGC-2-4
Information Request NEDGC-2-6
Information Request NEDGC-2-15
Information Request NEDGC-3-1
Information Request NEDGC-3-2
Information Request AG-1-10 (Supp) (BULK)

COMMONWEALTH OF MASSACHUSETTS
DEPARTMENT OF TELECOMMUNICATIONS AND ENERGY

Boston Edison Company Cambridge Electric Light Company Commonwealth Electric Company d/b/a NSTAR Electric	))))))	D.T.E. 03-121

CERTIFICATE OF SERVICE

I certify that I have this day served the foregoing documents upon the service list in the above-docketed proceeding in accordance with the requirements of 220 C.M.R. 1.05.

Stephen H. August

Stephen H. August, Esq.
Keegan, Werlin & Pabian, LLP
265 Franklin Street
Boston, MA 02110
(617) 951-1400

Dated: March 12, 2004

Information Request NEDGC-2-4

Provide complete and detailed documentation regarding the incorporation of DG into the distribution system planning process, including inter alia, any studies, internal memoranda or financial modeling that references actual or potential incorporation of DG into (1) the distribution planning process or (2) demand side management programs.

Response

As indicated in the response to Information Request DOER-1-4, distributed generation generally does not defer significant investment in distribution facilities for those distributed generation customers that desire firm, standby service. The presence of distributed generation on the Company's system is not currently widespread, with no known locations where more than one DG customer is served by the same distribution circuit. As a result, there is no diversity factor that can be applied to any portion of the Company's distribution system that would allow the Company to incorporate changes in the otherwise applicable distribution system planning process. In the future, it is possible that multiple DG customers served by the same circuit may provide sufficient diversity among their standby load requirements to allow the Company to incorporate the presence of such multiple DGs in the Company's transmission/distribution system planning process. Please see the response to Information Request AG-1-10, Attachment AG-1-10, page 8, which discusses the role of customer load-reduction programs on the planning process. For example, NSTAR Electric has considered several options for the installation of fuel cell DG technology in its service territory to gain experience and knowledge about this technology. NSTAR Electric is interested in promoting the use and further development of economical DG technologies, such as fuel cells, so that in time, the cost and improved design will allow this technology to provide mechanisms to address transmission line congestion and substation loading, directly benefiting the Company and its customers. See 2002 Fuel Cell Proposal, Attachment NEDGC-2-4.

NEDGC-2-4 Att.

2002 Fuel Cell Proposal

Submitted to

Massachusetts Technology Park Corporation
75 North Drive
Westborough, MA 01581

for

Purchase and Installation of Fuel Cells by NSTAR Electric & Gas Corporation

Period of Performance:
January 1, 2002 through December 31, 2012

Proposal Date:
December 20, 2001

by

Gary Raymond
(617) 424-2136
gary_raymond@nstaronline.com (Email)

NSTAR Electric & Gas Corporation
One NSTAR Way
Westwood, MA 02090
USA

Contents

1. Executive Summary 2

2. Proposed Options 3

A. Option 1 – Installation of a 200-250 kW Fuel Cell at an NSTAR Facility 3
Technical Justification and Approach 3
Task Description 3
Estimated Costs 4

B. Option 2 – Installation of a 400-500 kW Fuel Cell Assembly at an NSTAR Substation 4
Technical Justification and Approach 4
Task Description 5
Estimated Costs 5

C. Option 3 – Installation of a 200-250 kW Fuel Cell at an NSTAR Customer Facility 6
Technical Justification and Approach 6
Task Description 6
Estimated Costs 7

3. Detailed Cost Description 7

Purchase 7

Installation 7

Fuel 7

Maintenance 8

4. References 8

4. Executive Summary

Fuel cells have been in use commercially for over a decade, delivering extremely reliable, efficient, high-quality power to support electrical needs and occasionally to provide supplementary heating. They produce near zero emissions, operate off of city-pressure natural gas, and have the capability to reduce energy costs by offsetting facility heating load. Their operation is both safe and quiet, allowing for flexibility of location.

Several installations around the world have resulted in substantial benefits to the customer. Four fuel cells, with unit availabilities in excess of 99.9%, serve as Omaha Nebraska First National Bank's primary source of power for the data center and also provide energy for space heating. The Durst Organization installed two fuel cells at the Condé Nast Building in New York City to provide 400 kW of supplemental electricity. New York City's Central Park Police Station saved more than $1 million in line upgrades and prevented marring the appearance of the park by installing a 200 kW fuel cell; it is now completely disconnected from the electric grid. Lastly, five fuel cells connected in parallel are the primary source of power for the Anchorage Mail Processing Center, allowing normal operations to continue seamlessly during grid outages.

NSTAR would like to gain experience and knowledge in this technology for several purposes. First, as the energy demand of consumers increases and the cost of fuel cells decreases, many commercial and/or industrial customers may opt to rely on electricity generated from non-conventional resources. NSTAR would like to work with its customers to provide premium power for sensitive electrical loads whenever requested. Second, NSTAR would like to promote the use and further development of fuel cells so that in time, the cost and improved design will allow this technology to provide solutions to transmission line congestion and substation loading, directly benefiting the company and indirectly, the customers served by the company. In addition, NSTAR recognizes the importance of "green power" to the environment, and would like to play an important part in the development and promotion of alternative generation.

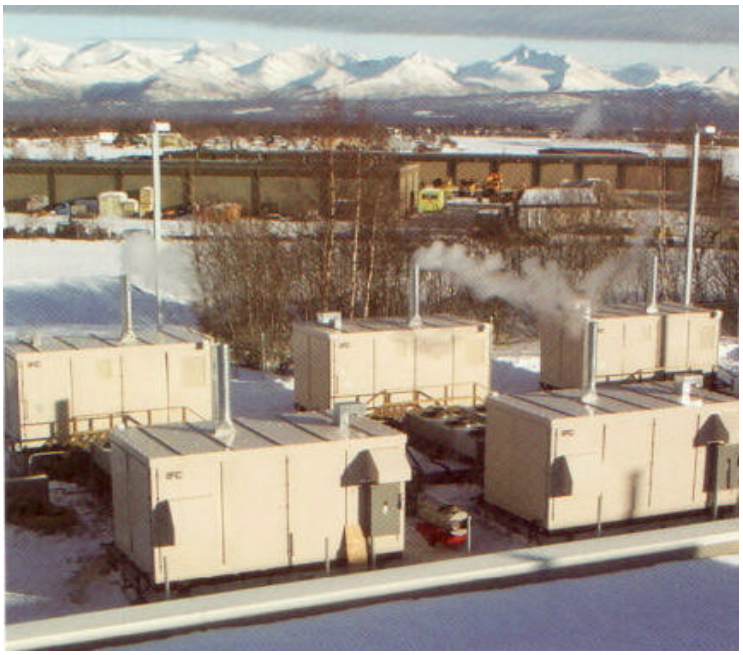

The five 200 kW units shown above supply the Anchorage Alaska Mail Processing Center for a total of 1 MW.

5. Proposed Options

There are three main types of fuel cells currently in use that are capable of producing 200 kW or more: molten carbonate (MCFC), phosphoric acid (PAFC), and proton exchange membrane (PEM). The 250 kW PEM manufactured by Ballard Power Systems is not yet commercially available; therefore, this proposal will be limited to the discussion of MCFC and PAFC applications.

Both types of fuel cells operate at high temperatures; the PAFC at 300 - 430ºF and the MCFC at 1112 - 1470ºF. The 200 kW PAFC unit produced by International Fuel Cells has the advantage of responding faster to varying demands in power; though both units can only be realistically used as base loaded units. The 250 kW MCFC unit produced by Fuel Cell Energy has the advantage of recovering more heat for customer hot water or heating requirements. The most efficient way to use either of the fuel cells is at the source of the load for supplemental energy AND supplemental hot water or heat.

4. Option 1 – Installation of a 200-250 kW Fuel Cell at an NSTAR Facility

NSTAR would like to propose installation of a 200-250 kW fuel cell at one of its own facilities, most likely the Summit building at One NSTAR Way, Westwood.

Technical Justification and Approach

There are several reasons why this facility is proposed. NSTAR personnel will have 24 hour access to the fuel cell for performance monitoring and to perform maintenance and repairs if needed. It also will provide some relief to very heavily loaded circuits (470-H9 and 344-1412H1) by supplementing the existing power supply. Adequate space and a natural gas supply are available, and the efficiency of the fuel cell can be enhanced by recovering the produced heat to offset the facility's heating and/or hot water demands. Due to NSTAR's lack of experience with this technology, it makes some sense to conduct a pilot program at its own site to gain needed knowledge without the risk of inconveniencing customers.

Task Description

The following descriptions provide a detailed listing of the tasks required for the installation of a fuel cell at either the Summit or a site within NSTAR Electric & Gas service territory.

Task 1: Selection of the fuel cell
There are two companies that have fuel cells available for purchase: International Fuel Cells and Fuel Cell Energy. Their cells use slightly different technologies, each having its own set of advantages and disadvantages. NSTAR will work in conjunction with Massachusetts Renewable Energy Trust to establish which type of cell best suits the needs of the facility.

Task 2: Engineering Design
Following the selection of the most appropriate fuel cell and location, design, specification and procurement of the equipment needed to access the building's electric and heating systems will be performed.

Task 3: Fuel Cell Installation, Commissioning, and Operation
Following the completion of Task 2, the fuel cell will be delivered to NSTAR for installation at the Summit or alternative site within the NSTAR Electric & Gas service territory. Several NSTAR personnel will be available to assist in the installation and commissioning of the fuel cell, and will be trained by the manufacturer on how to correctly perform both routine and non-routine maintenance.

The schedule for this is dependent on the lead time for the fuel cell as required by the manufacturer. It is anticipated that the fuel cell will be fully operational by 2003.

Task 4: Monitoring, Reporting and Feedback
NSTAR will monitor and provide feedback regarding the fuel cell performance, typical cost savings and estimated yearly maintenance costs to Massachusetts Renewable Energy Trust, and freely communicate this information to customers upon request.

Estimated Costs

Initial Costs	
Fuel Cell:	$900,000
Installation (including slab):	$180,000
Additional circuit protection:	$ 15,000
Engineering:	$ 75,000
Total:	***$1,170,000***
Major Maintenance	
Stack replacements (years 3, 8):	$600,000
Fuel processor unit replacement (year 7):	$ 60,000
Total:	***$ 66,000***
Yearly Maintenance	
Fuel consumption:	$102,268
Parts and labor:	$ 3,500
Total:	***$105,768 per year***

The estimated cost per kW-h for this option, assuming a 12 year life span, is _____.

5. Option 2 – Installation of a 400-500 kW Fuel Cell Assembly at an NSTAR Substation

NSTAR would like to propose installation of a 200-250 kW fuel cell at one of its substations, where it can be connected to the distribution grid to potentially relieve congestion and reduce the need for regional generation. A step-up transformer will also be needed for this application since the output of the assembly is 480 V and the distribution grid is at 1,400 V. There are two main requirements for this option: first, the station must have adequate space to accommodate the fuel cell, a step-up transformer, and associated switchgear. Second, the station must have an adequate supply of natural gas, preferably in an area served by NSTAR Gas Company. One potential site which satisfies both of these conditions is Needham Station #148; however, others may also prove to be both suitable and advantageous.

Technical Justification and Approach

There are several reasons why this idea is proposed. NSTAR personnel will have 24 hour access to the fuel cell to monitor performance and perform maintenance and repairs if needed. By connecting the unit to the distribution system in a strategic location, increasing the import capabilities is possible, which will enhance the ability to provide power to the customers during times of high electric demand. Adequate space and a natural gas supply are available at some substations where a fuel cell assembly could be of benefit. Again, due to lack of NSTAR's experience with this technology, it makes some sense to conduct a pilot program to gain needed knowledge without the risk of inconveniencing customers.

Task Description

The following descriptions provide a detailed listing of the tasks required for the installation of a fuel cell assembly at one of NSTAR's substations.

Task 1: Selection of the fuel cell and verification of location
There are two companies that have fuel cells available for purchase: International Fuel Cells and Fuel Cell Energy. Their cells use slightly different technologies, each having its own set of advantages and disadvantages. NSTAR will work in conjunction with Massachusetts Renewable Energy Trust to establish which type of cell best suits the needs of the facility.

In addition, load flow studies will be more extensively performed to verify that the fuel cell assembly is located in the place which will achieve the greatest benefit. Needham Station #148 has been identified as a suitable location; however, NSTAR endeavors to place the fuel cell assembly where the greatest benefit may be derived.

Task 2: Engineering Design
Following the selection of the most appropriate fuel cell and location, design, specification and procurement of the equipment needed to access the distribution system will be performed.

Task 3: Fuel Cell Installation, Commissioning, and Operation
Following the completion of Task 2, the fuel cell will be delivered to NSTAR for installation at either Needham Station #148 or an alternative site, based on the results of the load flow studies. Several NSTAR personnel will be available to assist in the installation and commissioning of the fuel cell, and will be trained by the manufacturer on how to correctly perform both routine and non-routine maintenance. The schedule for this is dependent on the lead time for the fuel cell as required by the manufacturer. It is anticipated that the fuel cell will be fully operational by 2003.

Task 4: Monitoring, Reporting and Feedback
NSTAR will monitor and provide feedback regarding the fuel cell performance and estimated yearly maintenance costs to Massachusetts Renewable Energy Trust, and freely communicate this information to customers upon request. In addition, documentation will be available regarding the estimated cost savings as a result of installing the fuel cell directly on the distribution system.

Estimated Costs

Initial Costs	
Fuel Cell Assembly	$1,800,000
Installation (including slab):	$250,000
Step-up tranformer and circuit breakers:	$ 45,000
Additional circuit protection:	$ 15,000
Engineering:	$ 80,000
Total:	***$2,190,000***
Major Maintenance	
Stack replacements (years 3, 8):	$530,000
Fuel processor unit replacement (year 7):	$120,000
Total:	***$656,000***
Yearly Maintenance	
Fuel consumption:	$204,536
Parts and labor:	$ 5,600

Total: ***$ 210,136 per year***

The estimated cost per kW-h for this option, assuming a 12 year life span, is _____.

6. Option 3 – Installation of a 200-250 kW Fuel Cell at an NSTAR Customer Facility

NSTAR would like to propose installation of a 200-250 kW fuel cell at one of customer locations, where it can be used as a supplemental source of electricity, and potentially supply additional heating or hot water for the customer's use. There are three main requirements for this option: the selected location must have adequate space to accommodate the fuel cell, the customer must be willing to work with NSTAR to allow 24-hour access for both planned and unplanned maintenance and repairs, and the location must have an adequate supply of natural gas, preferably in an area served by NSTAR Gas Company. Some suggested sites include the Convention Center and the Mokley Courthouse; however, any location served by the downtown network *may* not be suitable because of issues with parallel operation. Therefore, other sites outside of the downtown area will need to be considered.

Technical Justification and Approach

There are several reasons why installing a fuel cell to provide high quality power with high (>99.9%) availibility to an NSTAR customer is proposed. Both the customer and NSTAR will gain experience in the selection, installation and maintenance of a fuel cell. The customer can also benefit from thermal recovery, ranging from a simple pump supplying an add-on hydronic space heating loop to a multiple-use processor-controlled heat exchange system for domestic hot water plus a heat pump source loop.

Task Description

The following descriptions provide a detailed listing of the tasks required for the installation of a fuel cell assembly at a customer location.

Task 1: Selection of the fuel cell and verification of location
NSTAR will work directly with the customer to best determine the needs based on the particular application, using resources and expertise available from the Massachusetts Renewable Energy Trust. Again, an appropriate fuel cell will be chosen from those currently available, and sited at a convenient place on the customer's property.

Task 2: Engineering Design
Following the selection of the most appropriate fuel cell and location, design, specification and procurement of the equipment needed to access the distribution system will be performed.

Task 3: Fuel Cell Installation, Commissioning, and Operation
Following the completion of Task 2, the fuel cell will be delivered to the customer facility for installation. Several NSTAR personnel will be available to assist in the installation and commissioning of the fuel cell, and will be trained by the manufacturer on how to correctly perform both routine and non-routine maintenance. The schedule for this is dependent on the lead time for the fuel cell as required by the manufacturer. It is anticipated that the fuel cell will be fully operational by 2003.

Task 4: Monitoring, Reporting and Feedback
NSTAR, in cooperation with the customer, will monitor and provide feedback regarding the fuel cell performance and estimated yearly maintenance costs to Massachusetts Renewable Energy Trust, and

freely communicate this information to other customers upon request. In addition, documentation will be available regarding the estimated cost savings and other advantages as a result of installing the fuel cell at a customer location.

Estimated Costs

Initial Costs	
Fuel Cell:	$900,000
Installation (including slab):	$180,000
Additional circuit protection:	$ 15,000
Engineering:	$ 75,000
Total:	***$1,170,000***
Major Maintenance	
Stack replacements (years 3, 8):	$600,000
Fuel processor unit replacement (year 7):	$ 60,000
Total:	***$ 66,000***
Yearly Maintenance	
Fuel consumption:	$102,268
Parts and labor:	$ 3,500
Total:	***$ 105,768 per year***

The estimated cost per kW-h for this option, assuming a 12 year life span, is _____.

3. Detailed Cost Description

Purchase

On average, the cost of a fuel cell varies is between $4,000/kW (for multiple 200 or 250 kW cells) and $4,200/kW (for a single 200 kW or 250 kW cell). These costs are based on quotes from two manufacturers: International Fuel Cells and Fuel Cell Energy. Ballard Power Systems is currently conducting field trials and may have a commercial product available in a few years.

Installation

Each fuel cell unit capacity is 200 kW/235 kVA to 250 kW/292 kVA net, depending on the manufacturer. The output is 480 volt, 3-phase power at 60 Hz. Most units contain a protection package consisting of AC overvoltage, AC undervoltage, voltage imbalance, abnormal frequency, instantaneous AC overcurrent, inverse time AC overcurrent, and current imbalance.

The installation costs based on the manufacturer's estimates are between $150,000 and $180,000 for a single unit, including the cost of a slab. Multiple units may be connected together to form up to 2 MW of power, with subsequent units incurring somewhat lower installation costs than the original. If the unit(s) will be connected to the 14 kV distribution system, a step-up transformer and additional protection will be required, which may account for an additional $45,000.

Fuel

Natural gas is the fuel supply of choice. The consumption rate for a 200 kW cell (lifetime average) is 86.2 lbs/hr, or 2,050 scf/hr. If the gas is supplied by NSTAR for an NSTAR facility, this translates to a cost of approximately _____ per month.

Maintenance

Approximately $3,500 per year is needed for planned and unplanned labor and parts to maintain a single unit. These costs may be somewhat reduced by using in-house labor; however, approximately one week of training is required if that path is chosen. The planned maintenance consists of replacing the water treatment salts and air filter at a three to six month frequency, and more detailed maintence requiring shut-down yearly. In addition, during the 7th year of operation, the fuel processor unit, which transforms the fuel into usable hydrogen, must be changed for a cost of approximately $60,000.

The largest and most costly maintenance occurs after 3 years or 36,000 operating hours, when the main stack is required to be replaced. This cost is estimated to be roughly 1/3 of the cost of the original fuel cell (~$300,000), excluding labor. After the initial replacement, the interval will jump to 5 years for the remainder of the expected fuel cell life. Although there is little documentation as to exactly how long the expected life is, estimations run between 10 and 12 years.

4. References

[1] "Fuel Cell Handbook," EG&G Services, Parsons, Inc., Fifth Edition, October 2000.

[2] "PC25 Power Plant Design and Application Guide," International Fuel Cells Commercial Power Systems, Rev. A, September 2001.

[3] G. Lawton, "The Latest on Fuel Cells," Electrical World, pp. 41-43, September/October 2001.

[4] "How to Build a Clean Machine", Reprint from Business Week, McGraw-Hill Co., May 27, 1996.

[5] D. McClelland, et.al "First Commercial Fuel Cell Fleet: Experience, Lessons Learned, and Future Perspective", North American Fuel Cell Owners Group, 1994.

[6] Relevant web sites include:

http://www.mtpc.org
http://www.fuelcellstore.com
http://www.nfcrc.uci.edu
http://www.fuelcellenergy.com
http://www.fuelcells.org
http://www.humboldt.edu
http://www.ballard.com

Maintenance

Approximately $3,500 per year is needed for planned and unplanned labor and parts to maintain a single unit. These costs may be somewhat reduced by using in-house labor; however, approximately one week of training is required if that path is chosen. The planned maintenance consists of replacing the water treatment salts and air filter at a three to six month frequency, and more detailed maintence requiring shut-down yearly. In addition, during the 7th year of operation, the fuel processor unit, which transforms the fuel into usable hydrogen, must be changed for a cost of approximately $60,000.

The largest and most costly maintenance occurs after 3 years or 36,000 operating hours, when the main stack is required to be replaced. This cost is estimated to be roughly 1/3 of the cost of the original fuel cell (~$300,000), excluding labor. After the initial replacement, the interval will jump to 5 years for the remainder of the expected fuel cell life. Although there is little documentation as to exactly how long the expected life is, estimations run between 10 and 12 years.

4. References

[1] "Fuel Cell Handbook," EG&G Services, Parsons, Inc., Fifth Edition, October 2000.

[2] "PC25 Power Plant Design and Application Guide," International Fuel Cells Commercial Power Systems, Rev. A, September 2001.

[3] G. Lawton, "The Latest on Fuel Cells," Electrical World, pp. 41-43, September/October 2001.

[4] "How to Build a Clean Machine", Reprint from Business Week, McGraw-Hill Co., May 27, 1996.

[5] D. McClelland, et.al "First Commercial Fuel Cell Fleet: Experience, Lessons Learned, and Future Perspective", North American Fuel Cell Owners Group, 1994.

[6] Relevant web sites include:
http://www.mtpc.org
http://www.fuelcellstore.com
http://www.nfcrc.uci.edu
http://www.fuelcellenergy.com
http://www.fuelcells.org
http://www.humboldt.edu
http://www.ballard.com

Information Request NEDGC-2-6

Provide complete and detailed documentation for the statement that "the costs attributable to providing distribution service to the standby customer are predominantly fixed, unavoidable and the same as those incurred by a comparable all-requirements customer." *LaMontagne Testimony at 18.*

Response

The distribution system equipment necessary to deliver electric power to the customer includes the following components: customer meter, customer service wire, line transformer (if the customer takes primary service, the service wire and transformer are provided by the customer), secondary distribution wires (if needed), primary distribution wires, line poles supporting the wires, manholes and underground conduit, capacitors, fuses and switching equipment. The need for this equipment to serve customers, whether standby or non-standby, is described in the response to Information Request NEDGC-2-3; however, the need for the equipment does not vary depending on whether a customer is a standby customer or an all-requirements customer. To the extent that a customer desires firm service to meet its load requirements, the same types of facilities must be built to support the distribution system regardless of whether a customer has on-site generation. The costs for the distribution equipment are fixed once installed on the distribution system. According, customers whose loads trigger the installation of this equipment must pay for such fixed costs.

Information Request NEDGC-2-15

Please provide complete and detailed documentation regarding portions of the distribution systems in the Company's service territories that are operating at below the recommended reserve margins during peak load periods for each distribution voltage level, including substation, primary and secondary distribution.

Response

Please see the supplemental response to Information Request AG-1-10, Attachments AG-1-10(a)(supp), AG-1-10(b)(supp) and AG-1-10(c)(supp), which provide detailed assessments of the distribution facilities serving the NSTAR Electric system with respect to their ability to serve peak loads under normal and emergency conditions.

Information Request NEDGC-3-1

For each customer listed in response to NEDGC 1-7, please provide the following:

(a) a description of the specific distribution facilities which the Company installed for the specific purpose of providing service to the DG facility at the time the DG facility was installed;

(b) the dates the Company installed such distribution facilities;

(c) the dollar amount of investment made by the Company to install such distribution facilities; and

(d) the dollar amount contributed by the DG customer to defray the cost of such distribution facilities.

Please provide complete and detailed documentation for your response.

Response

The Company does not routinely maintain records that specifically link investment in distribution facilities with individual customers. A search of the Company's records was able to uncover information regarding the interconnection costs associated with one large customer who made a significant contribution to that investment.

Cambridge Electric received $1.4 million from Customer No. 1 listed on Attachment DTE-4-1(a) as payment for interconnection cost associated with the installation of a 21,500 kW cogeneration facility. The interconnection facilities, installed in 1995, encompassed the reconfiguration of metering, distribution feeder circuits and substation equipment to accommodate interconnection of the cogeneration facility with Cambridge Electric's distribution system.

Information Request NEDGC-3-2

For each Company and each Applicable Rate Schedule, provide the following load data for the most recent year for which data is available. Specify the dates for which data is provided.

(a) the hourly loads for the rate class for a week in January;

(b) the hourly loads for the rate class for a week in May;

(c) the hourly loads for the rate class for a week in August; and

(d) the hourly loads for the rate class for a week in October.

Response

The hourly load data for the requested periods are provided herewith as follows:

- Attachment NEDGC-3-2 (a), BECo January 13 – 19, 2002;
- Attachment NEDGC-3-2 (b), BECo May 12 – 18, 2002;
- Attachment NEDGC-3-2 (c), BECo August 11 – 17, 2002;
- Attachment NEDGC-3-2 (d), BECo October 20 – 26, 2002;
- Attachment NEDGC-3-2 (e), CAM January 13 – 19, 2002;
- Attachment NEDGC-3-2 (f), CAM May 12 – 18, 2002;
- Attachment NEDGC-3-2 (g), CAM August 11 – 17, 2002;
- Attachment NEDGC-3-2 (h), CAM October 20 – 26, 2002;
- Attachment NEDGC-3-2 (i), COM January 13 – 19, 2002;
- Attachment NEDGC-3-2 (j), COM May 12 – 18, 2002;
- Attachment NEDGC-3-2 (k), COM August 11 – 17, 2002; and
- Attachment NEDGC-3-2 (l), COM October 20 – 26, 2002.

BOSTON EDISON
HOURLY LOAD DATA

January 13-19, 2002

DATE - TIME	G3TL-ENTR-MEAN	T2TL-ENTR-MEAN	G2SURV-ENTR-MEAN
1/13/2002 0:00	296,868.74	325,814.92	187,345.66
1/13/2002 1:00	291,987.79	317,891.27	168,094.84
1/13/2002 2:00	288,537.91	312,356.74	163,158.44
1/13/2002 3:00	287,247.40	310,569.20	159,357.16
1/13/2002 4:00	286,110.22	309,125.41	159,535.00
1/13/2002 5:00	284,858.04	310,998.90	161,299.57
1/13/2002 6:00	287,375.17	314,814.62	167,142.74
1/13/2002 7:00	292,524.44	325,711.79	196,313.97
1/13/2002 8:00	294,607.15	337,554.29	199,529.68
1/13/2002 9:00	296,792.07	347,351.43	204,260.59
1/13/2002 10:00	295,897.66	357,011.06	212,902.94
1/13/2002 11:00	295,833.77	363,972.18	223,200.95
1/13/2002 12:00	301,187.48	371,775.51	225,272.83
1/13/2002 13:00	302,912.42	373,872.44	239,617.76
1/13/2002 14:00	303,768.50	374,027.13	240,352.73
1/13/2002 15:00	302,503.55	372,119.27	243,532.95
1/13/2002 16:00	301,698.57	368,853.56	240,958.59
1/13/2002 17:00	306,349.53	374,422.46	247,607.17
1/13/2002 18:00	309,403.31	377,310.03	248,993.08
1/13/2002 19:00	308,355.57	372,531.78	244,671.72
1/13/2002 20:00	305,697.88	364,384.69	234,695.16
1/13/2002 21:00	304,164.60	357,526.70	220,157.10
1/13/2002 22:00	301,647.46	350,806.20	216,107.71
1/13/2002 23:00	300,152.51	345,357.62	182,144.14
1/14/2002 0:00	300,024.74	338,791.82	172,227.85
1/14/2002 1:00	297,929.26	337,640.23	168,307.42
1/14/2002 2:00	296,536.53	339,462.15	163,688.34
1/14/2002 3:00	292,192.23	341,610.65	161,575.32
1/14/2002 4:00	297,022.07	347,884.25	163,199.30
1/14/2002 5:00	303,449.07	363,748.74	167,633.84
1/14/2002 6:00	325,221.66	399,173.12	177,851.98
1/14/2002 7:00	357,624.99	459,605.97	278,693.01
1/14/2002 8:00	383,039.13	507,422.87	288,923.57
1/14/2002 9:00	399,636.89	536,642.40	330,975.69
1/14/2002 10:00	407,290.52	548,759.91	361,953.62
1/14/2002 11:00	413,001.99	551,595.92	364,489.52
1/14/2002 12:00	414,829.15	548,347.40	356,571.81
1/14/2002 13:00	414,343.61	546,869.23	357,835.42
1/14/2002 14:00	414,215.84	545,030.12	357,398.84
1/14/2002 15:00	407,456.62	535,697.06	351,141.09
1/14/2002 16:00	403,623.42	527,928.10	336,927.81
1/14/2002 17:00	399,291.90	520,588.85	334,763.13
1/14/2002 18:00	391,523.28	505,927.52	322,669.04

DATE - TIME	G3TL-ENTR-MEAN	T2TL-ENTR-MEAN	G2SURV-ENTR-MEAN
1/14/2002 19:00	377,915.41	463,662.33	281,550.32
1/14/2002 20:00	368,600.73	438,636.67	259,078.86
1/14/2002 21:00	356,807.24	416,859.52	243,289.91
1/14/2002 22:00	346,125.39	390,665.08	221,755.28
1/14/2002 23:00	333,744.14	363,319.04	190,559.54
1/15/2002 0:00	324,787.23	346,732.66	170,354.19
1/15/2002 1:00	318,321.89	335,508.92	162,272.06
1/15/2002 2:00	316,456.40	332,965.11	159,247.94
1/15/2002 3:00	312,699.86	335,233.92	159,145.65
1/15/2002 4:00	313,888.16	339,754.35	163,020.38
1/15/2002 5:00	316,379.74	350,599.95	163,131.50
1/15/2002 6:00	330,588.14	383,652.39	173,315.35
1/15/2002 7:00	363,783.67	442,177.38	248,968.12
1/15/2002 8:00	387,817.85	496,164.76	278,388.73
1/15/2002 9:00	401,055.18	529,767.21	310,411.00
1/15/2002 10:00	408,606.58	546,680.16	360,135.92
1/15/2002 11:00	414,394.72	554,414.74	359,035.67
1/15/2002 12:00	416,847.97	553,074.08	357,935.98
1/15/2002 13:00	418,585.69	553,813.17	364,663.75
1/15/2002 14:00	418,074.59	553,641.29	367,727.30
1/15/2002 15:00	413,359.76	546,611.41	359,698.59
1/15/2002 16:00	409,322.12	535,817.38	343,763.89
1/15/2002 17:00	402,447.91	527,687.47	352,811.91
1/15/2002 18:00	392,622.13	511,187.03	344,586.99
1/15/2002 19:00	374,899.96	467,271.80	316,752.95
1/15/2002 20:00	365,138.07	442,383.64	298,451.22
1/15/2002 21:00	354,622.32	420,623.69	265,255.53
1/15/2002 22:00	345,384.30	392,504.19	251,478.07
1/15/2002 23:00	333,054.17	366,722.25	206,386.51
1/16/2002 0:00	322,065.65	348,417.08	176,799.36
1/16/2002 1:00	316,405.29	336,952.71	166,595.34
1/16/2002 2:00	313,134.29	331,005.68	160,787.02
1/16/2002 3:00	308,330.01	330,404.10	160,992.98
1/16/2002 4:00	304,752.36	337,348.03	161,465.94
1/16/2002 5:00	308,266.13	349,912.43	163,642.44
1/16/2002 6:00	325,451.65	383,463.32	178,041.99
1/16/2002 7:00	359,439.38	445,511.85	249,844.56
1/16/2002 8:00	382,681.36	499,894.54	275,083.31
1/16/2002 9:00	395,458.70	531,228.19	321,366.71
1/16/2002 10:00	406,012.78	547,986.45	355,051.93
1/16/2002 11:00	407,328.85	553,314.72	364,611.64
1/16/2002 12:00	405,195.03	549,533.36	361,656.00
1/16/2002 13:00	406,498.32	545,820.77	358,859.56
1/16/2002 14:00	408,466.03	543,397.26	351,162.21
1/16/2002 15:00	405,373.92	536,264.26	346,675.79
1/16/2002 16:00	400,518.53	527,670.28	344,071.18
1/16/2002 17:00	396,493.67	521,843.57	348,460.74
1/16/2002 18:00	389,453.35	508,402.58	336,432.20
1/16/2002 19:00	375,819.93	464,848.30	319,303.84

DATE - TIME	G3TL-ENTR-MEAN	T2TL-ENTR-MEAN	G2SURV-ENTR-MEAN
1/16/2002 20:00	365,840.82	439,685.13	300,840.73
1/16/2002 21:00	354,647.87	418,922.08	275,736.30
1/16/2002 22:00	346,534.26	393,501.09	257,736.36
1/16/2002 23:00	336,031.29	367,598.84	207,711.48
1/17/2002 0:00	326,448.28	350,290.57	181,335.33
1/17/2002 1:00	319,459.08	339,152.77	168,101.69
1/17/2002 2:00	311,281.58	333,446.37	160,826.10
1/17/2002 3:00	309,186.09	334,855.78	159,821.61
1/17/2002 4:00	307,282.27	340,132.48	162,531.38
1/17/2002 5:00	311,153.81	351,562.47	163,593.01
1/17/2002 6:00	327,649.35	387,210.30	173,128.69
1/17/2002 7:00	361,304.87	446,525.94	250,031.18
1/17/2002 8:00	385,441.27	501,682.09	280,305.72
1/17/2002 9:00	403,878.97	536,642.40	321,217.63
1/17/2002 10:00	411,392.04	554,294.43	347,887.26
1/17/2002 11:00	414,560.83	559,158.62	356,100.29
1/17/2002 12:00	412,414.23	557,233.57	353,878.85
1/17/2002 13:00	412,886.99	553,125.65	351,167.15
1/17/2002 14:00	411,098.17	549,481.80	351,155.69
1/17/2002 15:00	405,821.12	534,992.35	345,334.66
1/17/2002 16:00	401,400.16	523,012.35	332,707.14
1/17/2002 17:00	395,279.82	516,377.80	339,531.89
1/17/2002 18:00	388,737.82	503,658.71	335,685.06
1/17/2002 19:00	371,846.17	462,441.99	316,257.48
1/17/2002 20:00	362,608.16	439,135.12	305,292.04
1/17/2002 21:00	351,836.86	418,165.81	281,933.62
1/17/2002 22:00	343,812.69	392,315.12	261,523.35
1/17/2002 23:00	332,773.07	366,980.07	220,620.62
1/18/2002 0:00	326,077.74	349,963.99	183,044.43
1/18/2002 1:00	318,654.10	340,304.36	168,219.46
1/18/2002 2:00	314,833.68	336,608.95	162,628.20
1/18/2002 3:00	312,265.43	339,032.45	163,107.97
1/18/2002 4:00	310,054.95	345,288.87	165,728.07
1/18/2002 5:00	312,239.88	357,836.08	166,565.69
1/18/2002 6:00	328,633.21	391,404.16	181,455.73
1/18/2002 7:00	361,675.41	452,593.29	256,769.59
1/18/2002 8:00	383,307.45	504,552.48	277,029.47
1/18/2002 9:00	396,391.45	532,328.22	325,115.00
1/18/2002 10:00	402,166.80	547,333.31	348,359.35
1/18/2002 11:00	408,427.70	549,430.24	356,529.06
1/18/2002 12:00	406,153.33	546,112.96	344,092.21
1/18/2002 13:00	406,753.87	546,852.04	354,881.15
1/18/2002 14:00	407,034.97	546,920.80	358,069.59
1/18/2002 15:00	401,425.72	539,203.40	351,771.50
1/18/2002 16:00	394,193.74	525,676.48	337,968.15
1/18/2002 17:00	385,326.27	517,563.76	339,546.36
1/18/2002 18:00	378,694.83	503,950.90	329,180.80
1/18/2002 19:00	362,442.05	461,187.27	306,259.13
1/18/2002 20:00	354,315.66	436,969.43	293,699.61

DATE - TIME	G3TL-ENTR-MEAN	T2TL-ENTR-MEAN	G2SURV-ENTR-MEAN
1/18/2002 21:00	343,020.49	415,982.94	275,663.18
1/18/2002 22:00	340,720.57	389,410.36	264,917.11
1/18/2002 23:00	330,064.27	367,633.21	238,478.97
1/19/2002 0:00	321,771.78	351,889.05	195,735.41
1/19/2002 1:00	317,274.15	341,662.21	173,459.04
1/19/2002 2:00	314,680.35	338,723.07	168,176.81
1/19/2002 3:00	311,843.78	338,465.25	166,219.09
1/19/2002 4:00	310,936.59	338,946.51	170,361.10
1/19/2002 5:00	309,607.75	343,845.08	171,550.18
1/19/2002 6:00	312,750.97	357,492.32	180,242.77
1/19/2002 7:00	321,759.00	386,780.60	248,306.16
1/19/2002 8:00	324,493.35	414,831.34	253,044.96
1/19/2002 9:00	330,243.15	429,475.48	274,045.76
1/19/2002 10:00	334,268.01	439,375.75	296,399.60
1/19/2002 11:00	333,629.15	442,349.26	299,015.60
1/19/2002 12:00	335,060.21	439,616.38	298,309.09
1/19/2002 13:00	331,457.00	432,070.87	294,149.61
1/19/2002 14:00	325,030.00	406,581.13	277,368.42
1/19/2002 15:00	321,848.44	401,080.98	280,521.51
1/19/2002 16:00	321,605.67	398,554.35	280,442.66
1/19/2002 17:00	324,135.58	402,610.71	282,117.91
1/19/2002 18:00	324,761.67	401,682.56	305,589.78
1/19/2002 19:00	316,328.63	392,297.93	295,992.30
1/19/2002 20:00	310,744.93	386,144.64	283,915.65
1/19/2002 21:00	306,911.73	378,564.76	257,011.67
1/19/2002 22:00	305,531.78	368,681.68	253,858.85
1/19/2002 23:00	300,011.96	357,251.69	222,892.90

BOSTON EDISON
HOURLY LOAD DATA

May 12-18, 2002

DATE - TIME	G3TL-ENTR-MEAN	T2TL-ENTR-MEAN	G2SURV-ENTR-MEAN
5/12/2002 0:00	292,912.43	296,708.07	220,012.98
5/12/2002 1:00	287,219.41	287,080.38	188,071.94
5/12/2002 2:00	282,577.88	282,373.50	179,496.45
5/12/2002 3:00	278,732.46	278,794.72	176,763.56
5/12/2002 4:00	276,584.44	277,549.93	177,504.54
5/12/2002 5:00	275,412.79	277,491.58	176,015.39
5/12/2002 6:00	276,434.23	281,284.31	168,758.70
5/12/2002 7:00	276,614.48	287,313.77	189,806.83
5/12/2002 8:00	277,290.43	296,999.82	196,611.27
5/12/2002 9:00	284,335.35	308,436.36	205,717.13
5/12/2002 10:00	288,481.19	316,702.56	225,711.60
5/12/2002 11:00	288,736.55	324,988.21	240,489.00
5/12/2002 12:00	292,837.32	331,990.17	239,533.81
5/12/2002 13:00	292,416.73	332,962.67	247,831.01
5/12/2002 14:00	290,283.73	332,087.42	250,271.75
5/12/2002 15:00	288,841.70	330,473.08	247,872.32
5/12/2002 16:00	289,727.94	328,586.44	247,133.82
5/12/2002 17:00	287,369.62	328,022.39	252,560.05
5/12/2002 18:00	287,024.14	324,210.22	245,102.74
5/12/2002 19:00	286,918.99	317,966.80	264,203.85
5/12/2002 20:00	286,032.74	311,956.79	247,514.15
5/12/2002 21:00	284,966.24	309,331.05	229,169.38
5/12/2002 22:00	284,740.92	304,915.93	222,938.48
5/12/2002 23:00	280,745.30	300,500.80	201,402.23
5/13/2002 0:00	276,704.61	293,362.69	185,548.81
5/13/2002 1:00	279,153.05	288,441.87	183,527.94
5/13/2002 2:00	278,807.57	285,388.24	177,521.22
5/13/2002 3:00	277,455.66	284,726.94	179,075.31
5/13/2002 4:00	278,462.08	287,858.37	176,140.73
5/13/2002 5:00	283,208.76	297,913.96	172,798.61
5/13/2002 6:00	300,918.70	328,372.49	199,966.13
5/13/2002 7:00	332,898.73	386,741.61	242,449.82
5/13/2002 8:00	361,198.58	446,997.37	272,205.62
5/13/2002 9:00	380,575.86	485,196.96	318,442.35
5/13/2002 10:00	392,502.65	508,108.93	348,010.35
5/13/2002 11:00	397,549.76	518,261.77	358,643.75
5/13/2002 12:00	401,259.98	520,479.06	360,220.55
5/13/2002 13:00	403,498.13	521,412.65	352,171.99
5/13/2002 14:00	402,596.86	520,381.81	354,906.13
5/13/2002 15:00	397,579.80	514,819.14	347,365.90
5/13/2002 16:00	393,629.24	504,530.15	335,447.21
5/13/2002 17:00	382,859.07	491,187.52	322,168.75

DATE - TIME	G3TL-ENTR-MEAN	T2TL-ENTR-MEAN	G2SURV-ENTR-MEAN
5/13/2002 18:00	372,224.10	472,593.43	303,309.50
5/13/2002 19:00	357,803.80	430,114.87	279,218.89
5/13/2002 20:00	349,406.97	407,358.50	263,329.98
5/13/2002 21:00	340,484.41	389,989.74	253,301.13
5/13/2002 22:00	333,800.00	365,988.58	238,238.41
5/13/2002 23:00	321,933.29	339,050.48	210,542.47
5/14/2002 0:00	314,602.97	321,798.43	189,542.58
5/14/2002 1:00	311,884.14	310,167.40	178,036.24
5/14/2002 2:00	308,414.25	304,915.93	171,268.86
5/14/2002 3:00	305,229.77	302,543.04	171,748.41
5/14/2002 4:00	303,802.76	304,176.83	168,183.20
5/14/2002 5:00	304,854.24	310,634.19	166,981.74
5/14/2002 6:00	318,853.95	339,517.28	204,938.84
5/14/2002 7:00	346,342.66	398,625.50	236,738.22
5/14/2002 8:00	369,700.55	459,562.00	272,303.95
5/14/2002 9:00	387,725.93	496,147.24	326,637.86
5/14/2002 10:00	397,654.91	513,632.69	354,040.44
5/14/2002 11:00	404,925.14	521,082.00	368,525.88
5/14/2002 12:00	408,590.30	523,279.84	359,816.96
5/14/2002 13:00	408,755.54	525,633.28	353,400.22
5/14/2002 14:00	411,399.26	527,733.86	367,592.42
5/14/2002 15:00	401,950.96	521,120.90	350,010.93
5/14/2002 16:00	402,972.39	512,329.55	345,555.00
5/14/2002 17:00	394,485.44	500,153.92	339,016.40
5/14/2002 18:00	380,185.31	476,852.95	323,160.03
5/14/2002 19:00	358,239.41	428,150.43	284,335.83
5/14/2002 20:00	346,628.06	401,912.53	271,424.98
5/14/2002 21:00	340,484.41	384,329.83	265,641.57
5/14/2002 22:00	334,671.22	359,978.56	255,306.55
5/14/2002 23:00	323,240.13	334,071.31	219,476.16
5/15/2002 0:00	312,154.52	317,791.75	205,589.83
5/15/2002 1:00	308,684.63	306,569.17	190,722.47
5/15/2002 2:00	305,124.62	301,765.04	175,878.94
5/15/2002 3:00	299,717.01	299,606.11	173,297.59
5/15/2002 4:00	298,710.59	301,881.74	167,129.88
5/15/2002 5:00	300,798.53	309,992.35	167,967.42
5/15/2002 6:00	312,815.45	337,727.89	195,669.93
5/15/2002 7:00	343,293.36	396,777.76	243,635.42
5/15/2002 8:00	368,649.07	455,166.33	285,029.61
5/15/2002 9:00	388,071.41	489,086.93	332,646.42
5/15/2002 10:00	399,487.49	510,228.96	358,858.45
5/15/2002 11:00	404,910.12	518,592.42	366,313.21
5/15/2002 12:00	406,006.67	520,012.26	359,247.19
5/15/2002 13:00	406,322.11	521,548.80	360,230.83
5/15/2002 14:00	405,691.22	521,723.85	357,857.12
5/15/2002 15:00	403,347.92	516,044.48	353,113.37
5/15/2002 16:00	398,420.99	506,514.03	342,323.42
5/15/2002 17:00	390,264.50	494,630.15	328,614.19

DATE - TIME	G3TL-ENTR-MEAN	T2TL-ENTR-MEAN	G2SURV-ENTR-MEAN
5/15/2002 18:00	380,515.77	474,013.27	317,306.28
5/15/2002 19:00	362,670.65	430,990.11	288,126.19
5/15/2002 20:00	353,267.41	405,238.46	287,322.98
5/15/2002 21:00	344,029.40	386,060.87	280,933.50
5/15/2002 22:00	337,269.88	362,079.15	269,821.77
5/15/2002 23:00	322,684.35	334,071.31	222,839.47
5/16/2002 0:00	313,836.89	317,130.46	187,042.02
5/16/2002 1:00	305,049.52	305,227.12	174,162.97
5/16/2002 2:00	299,987.39	300,695.30	173,687.64
5/16/2002 3:00	296,742.82	297,894.51	172,688.25
5/16/2002 4:00	296,893.03	298,730.86	166,798.86
5/16/2002 5:00	299,747.05	306,569.17	162,482.91
5/16/2002 6:00	311,433.50	333,896.26	198,963.73
5/16/2002 7:00	341,656.06	396,349.86	230,524.30
5/16/2002 8:00	371,908.66	457,072.41	260,955.52
5/16/2002 9:00	392,037.00	496,730.74	304,218.70
5/16/2002 10:00	408,905.75	528,064.51	354,493.84
5/16/2002 11:00	426,044.88	550,490.24	365,537.67
5/16/2002 12:00	434,141.28	561,421.07	379,712.49
5/16/2002 13:00	442,192.62	568,306.34	391,780.74
5/16/2002 14:00	446,578.79	572,565.86	397,243.87
5/16/2002 15:00	445,332.04	570,873.72	401,348.04
5/16/2002 16:00	444,235.49	563,443.86	391,265.71
5/16/2002 17:00	433,675.62	550,451.34	376,363.76
5/16/2002 18:00	416,731.77	524,796.93	364,603.68
5/16/2002 19:00	393,013.37	468,800.70	333,258.86
5/16/2002 20:00	379,088.76	435,385.79	320,883.11
5/16/2002 21:00	370,031.01	411,890.32	307,104.82
5/16/2002 22:00	362,610.56	380,595.45	281,217.94
5/16/2002 23:00	344,735.39	348,153.03	241,980.61
5/17/2002 0:00	334,070.38	329,500.59	200,465.77
5/17/2002 1:00	322,308.82	317,111.01	182,765.27
5/17/2002 2:00	316,690.91	312,637.53	197,727.66
5/17/2002 3:00	315,008.54	308,903.15	194,070.57
5/17/2002 4:00	312,289.71	308,300.21	190,338.03
5/17/2002 5:00	314,963.48	316,508.06	188,531.57
5/17/2002 6:00	330,270.03	350,078.57	192,430.33
5/17/2002 7:00	363,752.17	416,033.15	227,554.64
5/17/2002 8:00	389,693.70	480,956.88	265,804.62
5/17/2002 9:00	410,362.80	523,182.59	323,244.05
5/17/2002 10:00	422,574.99	545,530.51	371,571.05
5/17/2002 11:00	430,731.48	559,845.63	391,176.04
5/17/2002 12:00	434,231.41	568,111.84	395,529.97
5/17/2002 13:00	432,774.36	565,136.00	398,617.46
5/17/2002 14:00	429,139.24	559,534.43	398,139.16
5/17/2002 15:00	427,712.23	555,488.86	394,913.10
5/17/2002 16:00	422,980.57	547,164.30	393,705.42
5/17/2002 17:00	411,128.88	532,537.99	387,188.25

DATE - TIME	G3TL-ENTR-MEAN	T2TL-ENTR-MEAN	G2SURV-ENTR-MEAN
5/17/2002 18:00	393,238.69	503,285.35	361,247.52
5/17/2002 19:00	369,670.50	445,966.53	314,175.40
5/17/2002 20:00	353,627.92	414,554.96	298,992.49
5/17/2002 21:00	343,713.96	391,506.84	286,698.00
5/17/2002 22:00	335,151.90	363,032.20	268,607.05
5/17/2002 23:00	320,416.15	334,110.21	237,790.33
5/18/2002 0:00	308,264.04	314,485.27	204,147.77
5/18/2002 1:00	299,116.16	299,606.11	177,762.68
5/18/2002 2:00	295,886.61	292,331.85	168,184.82
5/18/2002 3:00	295,646.28	286,827.53	169,793.79
5/18/2002 4:00	290,494.02	283,132.05	164,369.33
5/18/2002 5:00	288,586.34	283,696.10	161,064.18
5/18/2002 6:00	293,318.00	295,346.58	163,889.16
5/18/2002 7:00	299,927.30	315,127.12	226,132.60
5/18/2002 8:00	304,824.20	345,021.60	236,590.31
5/18/2002 9:00	312,334.77	368,867.16	263,623.51
5/18/2002 10:00	316,750.99	379,875.80	296,748.64
5/18/2002 11:00	317,246.69	387,577.96	298,591.81
5/18/2002 12:00	320,386.11	389,270.10	288,446.29
5/18/2002 13:00	316,435.55	386,333.16	292,166.85
5/18/2002 14:00	308,894.93	361,943.00	269,224.68
5/18/2002 15:00	305,304.88	355,543.99	262,989.54
5/18/2002 16:00	304,073.14	348,755.98	256,686.66
5/18/2002 17:00	301,038.87	345,177.20	268,476.25
5/18/2002 18:00	298,184.85	340,042.43	264,881.70
5/18/2002 19:00	291,500.44	334,713.16	258,057.98
5/18/2002 20:00	290,073.43	330,609.23	248,971.95
5/18/2002 21:00	292,056.22	328,878.19	250,715.59
5/18/2002 22:00	293,077.66	323,548.92	248,688.96
5/18/2002 23:00	288,466.17	316,080.16	217,072.85

BOSTON EDISON
HOURLY LOAD DATA

August 11 - 17, 2002

DATE - TIME	G3TL-ENTR-MEAN	T2TL-ENTR-MEAN	G2SURV-ENTR-MEAN
8/11/2002 0:00	358,713.34	352,983.74	241,005.31
8/11/2002 1:00	352,283.46	339,673.14	200,412.61
8/11/2002 2:00	347,796.67	331,510.78	186,279.55
8/11/2002 3:00	344,157.78	325,658.52	171,171.73
8/11/2002 4:00	341,543.43	322,534.38	165,047.01
8/11/2002 5:00	339,741.65	323,370.42	159,482.45
8/11/2002 6:00	343,186.23	328,386.64	163,422.95
8/11/2002 7:00	346,083.21	339,013.11	185,899.74
8/11/2002 8:00	352,937.05	360,464.07	214,759.26
8/11/2002 9:00	366,432.74	383,125.08	239,582.34
8/11/2002 10:00	376,660.49	405,632.08	259,498.87
8/11/2002 11:00	385,651.73	424,068.91	276,966.06
8/11/2002 12:00	395,349.55	441,009.66	302,606.76
8/11/2002 13:00	400,949.20	452,054.15	345,767.87
8/11/2002 14:00	403,722.53	456,850.37	354,039.18
8/11/2002 15:00	402,574.34	459,270.47	347,219.06
8/11/2002 16:00	405,771.62	460,568.53	342,121.89
8/11/2002 17:00	404,217.14	459,138.47	345,007.93
8/11/2002 18:00	405,135.69	453,638.22	314,957.40
8/11/2002 19:00	401,814.76	437,423.50	314,235.51
8/11/2002 20:00	397,221.99	418,832.67	303,168.47
8/11/2002 21:00	390,156.18	407,194.15	301,261.96
8/11/2002 22:00	386,358.31	396,589.68	292,878.69
8/11/2002 23:00	379,133.52	384,071.12	278,226.81
8/12/2002 0:00	376,554.51	373,664.66	256,187.47
8/12/2002 1:00	371,184.49	373,642.66	226,330.16
8/12/2002 2:00	369,771.33	374,522.70	217,279.17
8/12/2002 3:00	367,792.90	375,974.76	198,139.10
8/12/2002 4:00	370,230.61	387,239.26	202,099.23
8/12/2002 5:00	376,413.19	408,536.21	204,053.96
8/12/2002 6:00	396,886.36	443,385.77	228,810.02
8/12/2002 7:00	429,212.43	497,948.20	252,900.52
8/12/2002 8:00	465,230.38	557,042.83	328,865.45
8/12/2002 9:00	492,310.08	605,444.99	383,521.47
8/12/2002 10:00	510,804.83	641,482.60	439,323.42
8/12/2002 11:00	528,575.34	664,869.64	452,133.10
8/12/2002 12:00	541,700.07	679,918.31	475,383.50
8/12/2002 13:00	551,662.86	690,522.78	481,300.71
8/12/2002 14:00	554,665.83	696,815.06	489,718.57
8/12/2002 15:00	552,475.43	694,834.98	479,225.49
8/12/2002 16:00	546,239.85	685,550.56	473,134.17

DATE - TIME	G3TL-ENTR-MEAN	T2TL-ENTR-MEAN	G2SURV-ENTR-MEAN
8/12/2002 17:00	534,227.98	670,171.88	459,817.86
8/12/2002 18:00	518,859.85	641,878.62	415,325.68
8/12/2002 19:00	496,708.55	580,957.90	355,514.32
8/12/2002 20:00	479,044.03	540,190.08	334,219.08
8/12/2002 21:00	464,700.44	508,244.66	314,101.90
8/12/2002 22:00	448,996.69	469,038.91	300,927.57
8/12/2002 23:00	435,236.03	435,993.44	265,860.45
8/13/2002 0:00	423,559.78	411,946.37	242,912.57
8/13/2002 1:00	411,989.53	400,373.85	220,866.97
8/13/2002 2:00	408,438.96	395,753.64	206,953.99
8/13/2002 3:00	406,071.91	395,907.65	197,846.12
8/13/2002 4:00	406,301.55	404,818.05	197,168.06
8/13/2002 5:00	411,848.21	423,914.90	194,900.17
8/13/2002 6:00	426,350.78	459,204.47	219,699.31
8/13/2002 7:00	456,256.81	520,587.21	261,424.83
8/13/2002 8:00	489,819.39	580,451.88	331,847.55
8/13/2002 9:00	514,744.02	632,572.20	405,054.68
8/13/2002 10:00	532,373.21	668,477.80	462,695.56
8/13/2002 11:00	551,857.17	696,727.06	498,268.87
8/13/2002 12:00	559,929.85	707,595.55	501,090.24
8/13/2002 13:00	561,802.29	710,631.68	495,407.84
8/13/2002 14:00	565,476.51	712,655.77	491,619.02
8/13/2002 15:00	564,893.58	710,521.68	484,638.24
8/13/2002 16:00	558,234.06	702,029.30	473,058.43
8/13/2002 17:00	548,659.89	684,516.52	466,420.13
8/13/2002 18:00	532,885.48	658,005.33	434,352.49
8/13/2002 19:00	511,087.47	593,344.45	400,346.09
8/13/2002 20:00	496,531.90	555,656.77	369,800.75
8/13/2002 21:00	484,484.70	528,661.57	355,059.57
8/13/2002 22:00	473,020.43	492,601.96	349,923.03
8/13/2002 23:00	453,041.86	456,366.35	299,877.55
8/14/2002 0:00	442,125.19	432,363.28	266,964.57
8/14/2002 1:00	433,275.27	418,062.64	247,445.92
8/14/2002 2:00	426,333.11	413,838.45	231,086.14
8/14/2002 3:00	422,287.94	409,548.26	216,857.21
8/14/2002 4:00	423,082.84	417,556.62	213,482.80
8/14/2002 5:00	425,343.90	438,325.54	211,576.65
8/14/2002 6:00	435,765.97	471,789.03	239,684.84
8/14/2002 7:00	468,957.59	532,555.74	276,223.58
8/14/2002 8:00	504,887.22	594,334.50	352,014.18
8/14/2002 9:00	524,918.78	642,538.65	424,289.43
8/14/2002 10:00	543,431.20	678,532.25	472,474.32
8/14/2002 11:00	561,519.66	703,305.35	497,652.16
8/14/2002 12:00	573,266.56	716,439.94	506,036.22
8/14/2002 13:00	578,689.57	720,752.13	511,121.51
8/14/2002 14:00	575,686.60	720,224.11	510,823.58
8/14/2002 15:00	569,963.30	715,955.92	496,139.94
8/14/2002 16:00	560,018.18	705,087.43	491,624.40

DATE - TIME	G3TL-ENTR-MEAN	T2TL-ENTR-MEAN	G2SURV-ENTR-MEAN
8/14/2002 17:00	551,556.87	690,016.76	485,254.21
8/14/2002 18:00	535,817.79	663,307.57	450,675.15
8/14/2002 19:00	514,108.10	606,457.04	418,075.37
8/14/2002 20:00	498,810.63	568,285.33	375,126.73
8/14/2002 21:00	485,721.22	538,055.99	365,423.42
8/14/2002 22:00	475,034.19	497,090.16	355,370.12
8/14/2002 23:00	451,257.75	458,280.43	318,685.07
8/15/2002 0:00	436,808.17	431,813.25	285,294.43
8/15/2002 1:00	426,739.40	417,644.62	259,653.10
8/15/2002 2:00	421,634.35	411,374.34	237,120.94
8/15/2002 3:00	419,903.23	409,284.25	215,309.40
8/15/2002 4:00	417,412.53	415,576.53	215,671.89
8/15/2002 5:00	421,422.38	434,497.37	223,464.23
8/15/2002 6:00	436,030.93	469,940.95	241,937.19
8/15/2002 7:00	464,382.48	531,301.69	298,223.01
8/15/2002 8:00	497,185.49	590,418.32	359,915.57
8/15/2002 9:00	521,032.59	637,522.42	424,689.67
8/15/2002 10:00	537,990.52	670,963.91	467,380.36
8/15/2002 11:00	556,838.56	690,324.78	480,537.92
8/15/2002 12:00	564,999.57	700,797.24	492,641.75
8/15/2002 13:00	566,642.37	704,625.41	498,378.80
8/15/2002 14:00	565,476.51	708,167.57	501,166.68
8/15/2002 15:00	563,621.74	706,275.49	488,042.85
8/15/2002 16:00	561,095.71	701,457.27	481,482.85
8/15/2002 17:00	550,602.99	688,960.71	468,278.18
8/15/2002 18:00	536,294.73	661,547.49	445,096.10
8/15/2002 19:00	513,966.78	601,924.83	403,782.58
8/15/2002 20:00	499,817.50	562,059.06	382,980.58
8/15/2002 21:00	486,533.79	532,247.73	368,823.14
8/15/2002 22:00	472,137.21	493,416.00	346,010.73
8/15/2002 23:00	451,452.06	455,750.32	309,454.11
8/16/2002 0:00	439,528.51	429,415.14	269,075.99
8/16/2002 1:00	430,201.64	415,224.51	250,234.36
8/16/2002 2:00	426,403.77	410,164.29	237,387.25
8/16/2002 3:00	423,259.49	408,668.22	222,529.39
8/16/2002 4:00	425,432.22	419,866.72	224,857.30
8/16/2002 5:00	430,855.23	442,109.71	225,369.50
8/16/2002 6:00	447,742.51	484,901.62	253,542.68
8/16/2002 7:00	483,636.81	549,694.51	317,029.12
8/16/2002 8:00	513,878.46	605,951.01	384,032.49
8/16/2002 9:00	531,384.00	644,870.75	442,772.29
8/16/2002 10:00	542,124.02	673,340.02	474,602.89
8/16/2002 11:00	555,725.70	694,086.94	487,939.93
8/16/2002 12:00	564,240.00	706,539.50	486,725.04
8/16/2002 13:00	571,747.42	713,117.79	490,093.87
8/16/2002 14:00	573,160.58	716,263.93	499,856.84
8/16/2002 15:00	568,974.09	712,853.78	487,172.12
8/16/2002 16:00	559,541.24	701,215.26	479,236.38

DATE - TIME	G3TL-ENTR-MEAN	T2TL-ENTR-MEAN	G2SURV-ENTR-MEAN
8/16/2002 17:00	550,090.72	684,956.54	476,120.47
8/16/2002 18:00	533,097.45	654,683.19	458,791.60
8/16/2002 19:00	510,628.19	589,648.29	421,275.37
8/16/2002 20:00	492,840.02	554,028.70	408,347.55
8/16/2002 21:00	466,290.25	513,128.88	369,973.48
8/16/2002 22:00	449,579.62	473,703.12	356,841.23
8/16/2002 23:00	435,324.35	442,747.74	308,407.80
8/17/2002 0:00	429,654.04	424,970.95	292,128.52
8/17/2002 1:00	422,234.95	408,624.22	251,572.72
8/17/2002 2:00	416,140.69	400,659.86	241,053.40
8/17/2002 3:00	408,138.66	394,147.57	222,918.31
8/17/2002 4:00	405,118.03	393,641.55	220,862.46
8/17/2002 5:00	404,164.15	398,239.75	231,523.07
8/17/2002 6:00	408,562.61	412,980.41	241,957.92
8/17/2002 7:00	417,359.54	448,159.98	282,821.38
8/17/2002 8:00	430,060.33	486,617.69	308,127.33
8/17/2002 9:00	444,138.95	518,563.12	349,628.25
8/17/2002 10:00	451,876.01	532,819.75	375,112.25
8/17/2002 11:00	452,105.64	543,204.22	390,610.40
8/17/2002 12:00	456,044.83	546,086.35	384,823.35
8/17/2002 13:00	453,766.11	543,226.22	383,777.67
8/17/2002 14:00	447,300.90	513,678.90	392,920.56
8/17/2002 15:00	446,011.39	509,388.71	405,133.31
8/17/2002 16:00	446,894.61	506,616.59	409,236.16
8/17/2002 17:00	442,443.15	501,974.38	406,249.79
8/17/2002 18:00	435,907.28	488,795.79	400,117.95
8/17/2002 19:00	425,202.58	468,664.89	377,993.82
8/17/2002 20:00	415,381.11	452,318.16	368,359.58
8/17/2002 21:00	396,974.69	441,383.68	351,025.58
8/17/2002 22:00	385,298.44	426,269.00	348,886.30
8/17/2002 23:00	375,971.58	408,052.19	301,967.81

BOSTON EDISON
HOURLY LOAD DATA

October 20 - 26, 2002

DATE - TIME	G3TL-ENTR-MEAN	T2TL-ENTR-MEAN	G2SURV-ENTR-MEAN
10/20/2002 0:00	291,014.42	304,120.06	200,783.70
10/20/2002 1:00	285,351.86	293,635.26	171,098.24
10/20/2002 2:00	283,033.21	288,433.34	163,493.11
10/20/2002 3:00	280,036.32	284,081.54	158,402.85
10/20/2002 4:00	277,481.07	280,559.61	151,451.96
10/20/2002 5:00	276,645.09	282,219.37	153,062.46
10/20/2002 6:00	279,878.59	288,069.00	152,653.65
10/20/2002 7:00	283,916.51	298,897.90	185,391.21
10/20/2002 8:00	281,187.76	308,714.76	190,163.73
10/20/2002 9:00	285,336.09	316,871.85	218,878.96
10/20/2002 10:00	291,456.07	324,765.82	236,162.17
10/20/2002 11:00	293,932.45	331,485.81	254,466.05
10/20/2002 12:00	298,143.88	339,541.70	272,435.77
10/20/2002 13:00	299,547.69	342,921.94	278,608.26
10/20/2002 14:00	301,866.34	345,593.74	270,436.40
10/20/2002 15:00	301,046.14	346,180.73	274,950.11
10/20/2002 16:00	302,954.69	344,844.83	267,743.36
10/20/2002 17:00	299,326.87	341,970.61	271,142.59
10/20/2002 18:00	298,569.76	336,303.15	260,161.01
10/20/2002 19:00	302,307.99	336,303.15	257,495.38
10/20/2002 20:00	301,519.33	326,951.84	243,810.13
10/20/2002 21:00	295,430.90	319,280.52	209,481.61
10/20/2002 22:00	295,068.12	312,135.47	202,807.12
10/20/2002 23:00	289,200.51	305,698.86	174,744.49
10/21/2002 0:00	287,512.78	297,055.98	157,717.79
10/21/2002 1:00	286,266.71	291,975.50	154,377.22
10/21/2002 2:00	283,774.55	290,801.53	154,550.65
10/21/2002 3:00	283,301.36	289,607.31	153,951.01
10/21/2002 4:00	286,597.94	294,465.14	151,849.77
10/21/2002 5:00	292,481.32	309,483.91	155,945.25
10/21/2002 6:00	310,368.06	341,444.35	160,752.98
10/21/2002 7:00	343,397.02	402,551.73	205,610.27
10/21/2002 8:00	368,113.53	456,878.41	228,918.20
10/21/2002 9:00	383,239.97	490,458.12	277,322.75
10/21/2002 10:00	390,606.02	506,974.72	303,619.56
10/21/2002 11:00	399,486.30	517,580.97	309,083.89
10/21/2002 12:00	406,868.13	519,402.66	308,925.71
10/21/2002 13:00	408,950.18	520,414.71	317,586.05
10/21/2002 14:00	408,729.36	521,406.51	316,493.63
10/21/2002 15:00	403,240.31	514,686.52	319,040.07
10/21/2002 16:00	399,549.39	503,918.34	301,236.78

DATE - TIME	G3TL-ENTR-MEAN	T2TL-ENTR-MEAN	G2SURV-ENTR-MEAN
10/21/2002 17:00	389,848.91	490,579.57	294,354.29
10/21/2002 18:00	376,425.97	469,448.03	280,461.95
10/21/2002 19:00	364,044.06	430,909.29	272,323.28
10/21/2002 20:00	356,756.87	409,291.97	261,113.95
10/21/2002 21:00	345,762.99	386,945.97	246,054.92
10/21/2002 22:00	338,381.16	362,333.00	232,410.94
10/21/2002 23:00	325,478.73	338,995.20	190,521.03
10/22/2002 0:00	317,150.51	322,033.29	168,833.49
10/22/2002 1:00	310,636.21	310,070.90	162,025.18
10/22/2002 2:00	306,409.01	304,261.75	160,090.16
10/22/2002 3:00	303,002.01	303,027.05	160,137.49
10/22/2002 4:00	301,140.78	306,245.36	159,322.40
10/22/2002 5:00	304,831.69	318,693.54	158,543.36
10/22/2002 6:00	324,674.30	351,240.96	163,025.92
10/22/2002 7:00	356,094.39	412,631.72	210,114.49
10/22/2002 8:00	373,066.29	469,630.20	233,494.81
10/22/2002 9:00	390,117.06	502,177.62	287,828.20
10/22/2002 10:00	398,681.87	516,366.52	316,692.49
10/22/2002 11:00	403,871.23	523,025.79	327,240.52
10/22/2002 12:00	405,417.00	523,734.22	326,679.66
10/22/2002 13:00	408,413.90	521,710.13	324,214.23
10/22/2002 14:00	407,483.28	521,163.62	322,755.91
10/22/2002 15:00	402,514.74	515,820.01	310,908.25
10/22/2002 16:00	398,240.22	505,861.47	302,368.60
10/22/2002 17:00	387,719.54	491,368.96	302,977.97
10/22/2002 18:00	376,425.97	473,050.92	291,024.59
10/22/2002 19:00	364,880.03	435,180.12	285,485.12
10/22/2002 20:00	358,208.00	411,903.05	272,005.78
10/22/2002 21:00	348,318.24	388,443.80	254,361.55
10/22/2002 22:00	343,412.79	362,312.75	247,113.68
10/22/2002 23:00	332,876.33	336,991.34	195,861.79
10/23/2002 0:00	325,021.31	319,442.45	166,136.53
10/23/2002 1:00	318,301.95	308,815.96	164,228.67
10/23/2002 2:00	313,349.19	303,937.89	156,439.36
10/23/2002 3:00	308,633.02	300,415.97	156,116.85
10/23/2002 4:00	308,396.42	302,318.62	152,356.02
10/23/2002 5:00	309,942.19	312,783.18	153,586.74
10/23/2002 6:00	324,832.03	345,391.33	162,175.18
10/23/2002 7:00	357,009.24	406,782.09	217,071.73
10/23/2002 8:00	382,451.31	468,010.92	251,766.19
10/23/2002 9:00	397,041.46	507,055.69	294,056.58
10/23/2002 10:00	408,587.40	529,077.83	330,960.53
10/23/2002 11:00	415,543.36	533,308.18	332,722.11
10/23/2002 12:00	415,858.82	533,470.11	330,263.59
10/23/2002 13:00	416,316.24	531,223.37	330,585.65
10/23/2002 14:00	417,956.65	526,547.71	326,576.54
10/23/2002 15:00	410,606.36	518,613.26	321,017.81
10/23/2002 16:00	404,265.56	506,731.83	317,370.70

DATE - TIME	G3TL-ENTR-MEAN	T2TL-ENTR-MEAN	G2SURV-ENTR-MEAN
10/23/2002 17:00	393,113.95	494,931.37	310,212.26
10/23/2002 18:00	383,728.93	476,856.21	305,504.48
10/23/2002 19:00	374,438.56	441,697.71	321,493.74
10/23/2002 20:00	366,820.13	419,088.58	310,074.39
10/23/2002 21:00	356,520.27	397,673.67	283,971.08
10/23/2002 22:00	345,826.08	372,655.87	282,621.46
10/23/2002 23:00	331,977.26	347,921.45	227,546.11
10/24/2002 0:00	322,891.94	331,101.23	218,351.38
10/24/2002 1:00	320,336.69	320,899.80	201,987.10
10/24/2002 2:00	316,172.58	315,738.36	200,355.09
10/24/2002 3:00	311,598.37	313,228.48	194,782.67
10/24/2002 4:00	312,276.61	315,677.64	196,528.90
10/24/2002 5:00	314,122.07	325,838.59	199,103.03
10/24/2002 6:00	330,920.46	360,207.70	203,884.89
10/24/2002 7:00	364,848.49	422,893.88	231,682.28
10/24/2002 8:00	387,640.67	479,062.47	257,250.41
10/24/2002 9:00	405,006.90	509,808.45	306,400.76
10/24/2002 10:00	409,770.39	523,997.35	337,000.10
10/24/2002 11:00	414,344.60	528,450.36	346,283.44
10/24/2002 12:00	414,328.83	525,596.38	339,606.83
10/24/2002 13:00	414,833.57	524,442.65	342,897.87
10/24/2002 14:00	414,265.73	523,491.33	337,410.42
10/24/2002 15:00	411,978.63	518,471.58	333,540.87
10/24/2002 16:00	406,805.04	508,148.70	324,639.94
10/24/2002 17:00	397,041.46	494,708.72	328,503.71
10/24/2002 18:00	385,795.22	476,006.09	321,635.91
10/24/2002 19:00	372,798.15	438,256.75	321,672.78
10/24/2002 20:00	365,021.99	414,898.71	306,364.22
10/24/2002 21:00	354,737.90	394,455.36	291,299.19
10/24/2002 22:00	346,804.02	369,700.70	292,250.88
10/24/2002 23:00	331,535.62	342,719.53	239,119.48
10/25/2002 0:00	324,043.38	323,409.68	199,835.42
10/25/2002 1:00	319,611.12	313,694.03	194,860.06
10/25/2002 2:00	315,604.75	309,463.67	203,066.59
10/25/2002 3:00	311,724.55	306,832.35	196,097.68
10/25/2002 4:00	311,693.01	309,402.95	166,469.73
10/25/2002 5:00	313,617.33	321,952.33	170,822.02
10/25/2002 6:00	328,223.26	356,139.27	177,278.45
10/25/2002 7:00	360,621.29	417,246.65	220,569.32
10/25/2002 8:00	381,394.51	474,224.89	249,205.51
10/25/2002 9:00	395,684.97	504,120.75	287,529.56
10/25/2002 10:00	402,546.29	517,763.14	323,166.15
10/25/2002 11:00	406,252.98	522,317.35	346,841.48
10/25/2002 12:00	405,417.00	523,207.95	348,957.96
10/25/2002 13:00	406,473.80	521,608.92	346,236.53
10/25/2002 14:00	406,663.08	521,527.96	347,176.32
10/25/2002 15:00	401,142.48	512,176.64	333,173.85
10/25/2002 16:00	394,265.39	497,987.75	328,673.31

DATE - TIME	G3TL-ENTR-MEAN	T2TL-ENTR-MEAN	G2SURV-ENTR-MEAN
10/25/2002 17:00	380,511.21	483,495.24	319,392.45
10/25/2002 18:00	368,807.54	464,590.20	318,722.71
10/25/2002 19:00	353,476.05	425,545.44	320,344.62
10/25/2002 20:00	345,904.95	402,916.07	299,518.43
10/25/2002 21:00	336,819.62	382,047.67	287,749.87
10/25/2002 22:00	328,475.63	360,187.46	288,650.58
10/25/2002 23:00	317,245.15	337,537.85	234,937.70
10/26/2002 0:00	310,399.61	318,895.95	196,081.54
10/26/2002 1:00	304,326.95	305,881.02	173,614.42
10/26/2002 2:00	300,667.58	299,525.37	165,238.44
10/26/2002 3:00	297,907.28	294,181.76	163,114.98
10/26/2002 4:00	295,651.72	293,189.96	164,256.32
10/26/2002 5:00	294,421.42	296,752.36	165,190.35
10/26/2002 6:00	299,484.60	308,593.31	166,767.06
10/26/2002 7:00	309,863.32	335,959.06	207,688.42
10/26/2002 8:00	315,667.84	364,357.09	229,089.88
10/26/2002 9:00	320,762.56	383,484.77	248,921.71
10/26/2002 10:00	322,828.84	393,524.28	287,115.58
10/26/2002 11:00	324,485.02	398,746.44	312,993.95
10/26/2002 12:00	326,709.04	398,280.90	305,859.09
10/26/2002 13:00	324,658.53	396,034.15	310,076.20
10/26/2002 14:00	324,516.57	373,708.40	314,087.99
10/26/2002 15:00	320,731.02	368,870.82	296,470.56
10/26/2002 16:00	319,106.38	363,952.27	294,404.50
10/26/2002 17:00	316,330.31	361,199.50	286,991.18
10/26/2002 18:00	317,118.97	358,770.59	302,935.17
10/26/2002 19:00	316,156.81	355,613.00	313,088.37
10/26/2002 20:00	311,298.68	348,103.62	285,976.67
10/26/2002 21:00	307,576.22	339,723.87	277,454.98
10/26/2002 22:00	307,055.70	333,105.08	276,843.00
10/26/2002 23:00	296,992.44	321,203.41	232,197.09

CAMBRIDGE ELECTRIC
HOURLY LOAD DATA

January 13 - 19, 2002

DATE - TIME	G2-ENTR-MEAN	G3-ENTR-MEAN
1/13/2002 0:00	45,275.86	36,902.77
1/13/2002 1:00	44,309.54	36,741.17
1/13/2002 2:00	43,468.49	36,444.38
1/13/2002 3:00	43,037.02	36,302.98
1/13/2002 4:00	42,830.24	36,141.38
1/13/2002 5:00	42,985.33	35,999.98
1/13/2002 6:00	43,414.80	36,186.44
1/13/2002 7:00	44,446.74	36,814.20
1/13/2002 8:00	45,391.19	37,303.67
1/13/2002 9:00	46,705.46	37,822.66
1/13/2002 10:00	48,451.20	38,085.26
1/13/2002 11:00	50,194.95	38,316.79
1/13/2002 12:00	51,980.45	38,688.16
1/13/2002 13:00	52,020.22	38,779.84
1/13/2002 14:00	52,081.86	38,703.70
1/13/2002 15:00	51,767.70	38,587.16
1/13/2002 16:00	51,300.45	38,364.96
1/13/2002 17:00	51,775.66	38,420.90
1/13/2002 18:00	52,143.50	38,552.98
1/13/2002 19:00	51,610.63	38,574.73
1/13/2002 20:00	50,200.91	38,361.85
1/13/2002 21:00	49,153.07	38,124.11
1/13/2002 22:00	48,685.82	37,856.85
1/13/2002 23:00	47,500.79	37,614.44
1/14/2002 0:00	46,425.11	37,013.10
1/14/2002 1:00	45,717.27	36,834.40
1/14/2002 2:00	45,367.33	36,728.74
1/14/2002 3:00	45,295.75	36,517.41
1/14/2002 4:00	45,184.40	36,658.81
1/14/2002 5:00	46,574.23	37,084.57
1/14/2002 6:00	49,544.77	39,264.65
1/14/2002 7:00	53,565.14	42,133.09
1/14/2002 8:00	57,430.42	44,735.81
1/14/2002 9:00	60,635.58	47,004.46
1/14/2002 10:00	62,854.53	48,160.53
1/14/2002 11:00	63,812.90	48,651.56
1/14/2002 12:00	63,930.21	48,758.77
1/14/2002 13:00	63,631.97	48,065.75
1/14/2002 14:00	63,419.22	47,938.33
1/14/2002 15:00	62,761.08	47,461.29
1/14/2002 16:00	62,600.03	46,953.18
1/14/2002 17:00	62,685.53	46,090.78

DATE - TIME	G2-ENTR-MEAN	G3-ENTR-MEAN
1/14/2002 18:00	61,482.60	44,616.16
1/14/2002 19:00	59,021.07	42,757.74
1/14/2002 20:00	57,169.95	42,291.58
1/14/2002 21:00	55,137.89	41,161.92
1/14/2002 22:00	52,332.39	40,151.91
1/14/2002 23:00	48,389.56	39,145.00
1/15/2002 0:00	46,637.86	38,329.22
1/15/2002 1:00	45,299.72	37,875.49
1/15/2002 2:00	44,890.13	37,634.64
1/15/2002 3:00	44,754.93	37,516.55
1/15/2002 4:00	44,566.04	37,505.67
1/15/2002 5:00	45,890.25	37,434.19
1/15/2002 6:00	48,172.84	38,773.63
1/15/2002 7:00	52,624.67	42,018.10
1/15/2002 8:00	56,360.71	44,696.97
1/15/2002 9:00	60,345.28	46,774.48
1/15/2002 10:00	62,631.84	48,085.95
1/15/2002 11:00	64,403.43	48,897.07
1/15/2002 12:00	64,733.49	48,847.34
1/15/2002 13:00	64,753.37	48,752.56
1/15/2002 14:00	64,618.17	48,839.57
1/15/2002 15:00	64,309.98	48,272.41
1/15/2002 16:00	63,657.81	47,509.46
1/15/2002 17:00	63,003.66	46,429.53
1/15/2002 18:00	61,391.14	44,664.33
1/15/2002 19:00	58,617.44	42,863.40
1/15/2002 20:00	57,205.74	42,251.18
1/15/2002 21:00	55,465.97	41,314.20
1/15/2002 22:00	52,865.25	40,231.15
1/15/2002 23:00	48,832.96	39,267.76
1/16/2002 0:00	46,983.82	38,391.38
1/16/2002 1:00	45,496.57	37,928.32
1/16/2002 2:00	44,937.85	37,662.61
1/16/2002 3:00	44,643.58	37,570.93
1/16/2002 4:00	44,615.74	37,445.07
1/16/2002 5:00	45,717.27	37,685.92
1/16/2002 6:00	48,150.96	38,747.21
1/16/2002 7:00	52,916.95	42,109.78
1/16/2002 8:00	56,961.18	44,690.75
1/16/2002 9:00	60,723.06	46,835.09
1/16/2002 10:00	63,403.31	48,238.23
1/16/2002 11:00	64,260.27	48,716.82
1/16/2002 12:00	64,419.34	48,556.77
1/16/2002 13:00	64,073.37	48,329.90
1/16/2002 14:00	64,063.43	48,416.92
1/16/2002 15:00	63,582.26	48,053.32
1/16/2002 16:00	62,769.04	47,618.23
1/16/2002 17:00	62,983.78	46,780.70
1/16/2002 18:00	61,438.86	45,261.02

DATE - TIME	G2-ENTR-MEAN	G3-ENTR-MEAN
1/16/2002 19:00	58,788.44	43,295.38
1/16/2002 20:00	57,026.79	42,554.18
1/16/2002 21:00	55,181.64	41,687.13
1/16/2002 22:00	52,568.99	40,586.99
1/16/2002 23:00	48,930.38	39,412.27
1/17/2002 0:00	46,922.19	38,458.19
1/17/2002 1:00	45,764.99	38,038.65
1/17/2002 2:00	45,081.01	37,678.15
1/17/2002 3:00	44,923.93	37,541.41
1/17/2002 4:00	44,822.53	37,485.47
1/17/2002 5:00	46,013.53	37,577.15
1/17/2002 6:00	48,518.80	38,703.70
1/17/2002 7:00	52,692.27	42,108.22
1/17/2002 8:00	56,921.41	44,687.64
1/17/2002 9:00	61,128.68	46,347.17
1/17/2002 10:00	63,795.01	47,953.87
1/17/2002 11:00	64,749.40	49,091.30
1/17/2002 12:00	65,047.64	49,074.21
1/17/2002 13:00	64,797.12	49,016.71
1/17/2002 14:00	64,477.00	48,637.57
1/17/2002 15:00	63,091.14	48,082.84
1/17/2002 16:00	62,174.53	47,385.15
1/17/2002 17:00	62,061.20	46,549.17
1/17/2002 18:00	60,792.65	45,128.94
1/17/2002 19:00	57,889.72	43,146.21
1/17/2002 20:00	56,696.73	42,314.89
1/17/2002 21:00	54,664.68	41,317.31
1/17/2002 22:00	52,199.17	40,315.06
1/17/2002 23:00	48,679.86	39,328.36
1/18/2002 0:00	46,729.32	38,240.65
1/18/2002 1:00	45,528.38	37,852.18
1/18/2002 2:00	44,983.58	37,609.78
1/18/2002 3:00	44,902.06	37,602.01
1/18/2002 4:00	44,983.58	37,510.33
1/18/2002 5:00	46,277.97	37,412.44
1/18/2002 6:00	48,739.50	38,624.46
1/18/2002 7:00	53,022.33	41,774.14
1/18/2002 8:00	56,730.53	44,571.10
1/18/2002 9:00	60,418.85	46,572.48
1/18/2002 10:00	62,934.07	47,894.82
1/18/2002 11:00	63,667.75	48,618.92
1/18/2002 12:00	63,767.17	48,379.63
1/18/2002 13:00	64,188.69	48,287.95
1/18/2002 14:00	64,051.50	48,301.94
1/18/2002 15:00	63,753.25	47,786.05
1/18/2002 16:00	62,546.35	46,911.22
1/18/2002 17:00	62,355.47	45,904.32
1/18/2002 18:00	61,293.71	44,675.21
1/18/2002 19:00	58,798.38	42,976.84

DATE - TIME	G2-ENTR-MEAN	G3-ENTR-MEAN
1/18/2002 20:00	57,046.67	41,935.74
1/18/2002 21:00	55,235.32	40,579.22
1/18/2002 22:00	52,835.43	39,931.26
1/18/2002 23:00	49,797.29	39,068.86
1/19/2002 0:00	48,166.87	38,349.42
1/19/2002 1:00	46,920.20	37,769.83
1/19/2002 2:00	46,279.96	37,591.13
1/19/2002 3:00	45,894.23	37,429.53
1/19/2002 4:00	45,796.80	37,166.93
1/19/2002 5:00	46,458.91	36,868.59
1/19/2002 6:00	46,906.28	37,362.72
1/19/2002 7:00	49,065.59	38,700.60
1/19/2002 8:00	50,680.10	39,193.17
1/19/2002 9:00	52,996.48	39,287.96
1/19/2002 10:00	55,004.68	39,718.38
1/19/2002 11:00	55,585.26	39,889.30
1/19/2002 12:00	55,738.36	39,879.98
1/19/2002 13:00	55,211.46	39,895.52
1/19/2002 14:00	54,382.34	39,457.33
1/19/2002 15:00	54,416.14	39,225.80
1/19/2002 16:00	54,064.21	39,218.03
1/19/2002 17:00	54,356.49	39,135.68
1/19/2002 18:00	54,284.91	39,016.03
1/19/2002 19:00	53,658.59	38,921.24
1/19/2002 20:00	53,159.52	38,576.29
1/19/2002 21:00	52,493.44	38,284.16
1/19/2002 22:00	51,362.09	37,898.80
1/19/2002 23:00	49,212.72	37,546.07

CAMBRIDGE ELECTRIC
HOURLY LOAD DATA

May 12 - 18, 2002

DATE - TIME	G2-ENTR-MEAN	G3-ENTR-MEAN
5/12/2002 0:00	43,862.63	39,731.43
5/12/2002 1:00	42,259.46	38,947.72
5/12/2002 2:00	41,090.79	38,969.54
5/12/2002 3:00	40,746.18	39,025.10
5/12/2002 4:00	40,558.89	38,790.98
5/12/2002 5:00	40,211.78	38,662.01
5/12/2002 6:00	40,898.50	38,796.93
5/12/2002 7:00	41,462.86	39,102.48
5/12/2002 8:00	42,569.10	39,925.88
5/12/2002 9:00	44,117.34	40,495.31
5/12/2002 10:00	45,428.35	40,886.18
5/12/2002 11:00	47,653.32	41,253.23
5/12/2002 12:00	49,251.51	41,449.66
5/12/2002 13:00	48,981.81	41,362.36
5/12/2002 14:00	48,509.85	41,078.63
5/12/2002 15:00	48,140.27	40,489.36
5/12/2002 16:00	47,733.23	40,281.03
5/12/2002 17:00	47,396.12	39,892.15
5/12/2002 18:00	47,226.31	39,673.90
5/12/2002 19:00	46,612.01	39,570.72
5/12/2002 20:00	45,515.75	39,233.43
5/12/2002 21:00	44,394.53	38,826.69
5/12/2002 22:00	43,722.79	38,816.77
5/12/2002 23:00	42,646.52	38,415.98
5/13/2002 0:00	41,407.93	37,723.53
5/13/2002 1:00	40,399.07	37,324.73
5/13/2002 2:00	39,724.84	37,142.20
5/13/2002 3:00	39,762.30	36,997.36
5/13/2002 4:00	39,744.82	37,296.95
5/13/2002 5:00	40,498.96	37,832.66
5/13/2002 6:00	43,190.90	39,705.64
5/13/2002 7:00	47,518.48	42,590.51
5/13/2002 8:00	52,000.88	45,963.47
5/13/2002 9:00	56,490.78	48,326.52
5/13/2002 10:00	59,067.85	49,685.62
5/13/2002 11:00	60,581.13	50,667.75
5/13/2002 12:00	60,838.34	50,703.46
5/13/2002 13:00	61,080.56	50,465.37
5/13/2002 14:00	60,848.32	50,610.21
5/13/2002 15:00	60,321.42	50,044.74
5/13/2002 16:00	59,447.42	49,213.41
5/13/2002 17:00	58,628.35	47,651.93
5/13/2002 18:00	56,927.78	45,584.51
5/13/2002 19:00	54,230.85	43,955.57
5/13/2002 20:00	52,794.98	42,933.76

DATE - TIME	G2-ENTR-MEAN	G3-ENTR-MEAN
5/13/2002 21:00	51,126.88	41,804.81
5/13/2002 22:00	48,502.36	41,017.13
5/13/2002 23:00	44,786.58	40,114.36
5/14/2002 0:00	42,943.68	38,977.48
5/14/2002 1:00	41,517.80	38,197.73
5/14/2002 2:00	40,828.58	37,878.29
5/14/2002 3:00	40,548.90	37,771.15
5/14/2002 4:00	40,431.54	37,495.36
5/14/2002 5:00	41,220.64	38,164.00
5/14/2002 6:00	43,358.21	39,584.61
5/14/2002 7:00	47,568.42	42,775.03
5/14/2002 8:00	51,848.56	46,251.16
5/14/2002 9:00	56,460.81	48,155.89
5/14/2002 10:00	58,900.54	49,449.52
5/14/2002 11:00	60,516.20	50,261.01
5/14/2002 12:00	61,779.76	51,227.26
5/14/2002 13:00	61,994.52	51,760.98
5/14/2002 14:00	62,351.61	52,316.53
5/14/2002 15:00	61,827.21	51,836.38
5/14/2002 16:00	61,794.75	50,995.12
5/14/2002 17:00	61,472.61	50,136.01
5/14/2002 18:00	59,317.56	48,272.95
5/14/2002 19:00	54,865.13	45,997.20
5/14/2002 20:00	52,185.67	43,991.28
5/14/2002 21:00	50,192.94	42,588.53
5/14/2002 22:00	47,685.79	41,409.98
5/14/2002 23:00	43,935.05	40,336.58
5/15/2002 0:00	42,501.68	39,253.27
5/15/2002 1:00	41,238.12	38,606.46
5/15/2002 2:00	40,516.44	38,251.30
5/15/2002 3:00	40,324.16	38,009.24
5/15/2002 4:00	40,191.81	38,015.20
5/15/2002 5:00	40,988.40	38,330.67
5/15/2002 6:00	43,233.35	39,290.97
5/15/2002 7:00	47,598.39	42,471.47
5/15/2002 8:00	52,040.84	45,834.50
5/15/2002 9:00	56,320.97	48,046.76
5/15/2002 10:00	58,835.61	49,622.13
5/15/2002 11:00	59,772.05	50,437.59
5/15/2002 12:00	60,341.40	51,137.98
5/15/2002 13:00	60,383.85	51,501.07
5/15/2002 14:00	60,556.16	51,584.40
5/15/2002 15:00	60,850.82	51,977.25
5/15/2002 16:00	60,368.87	51,384.01
5/15/2002 17:00	59,769.55	50,141.96
5/15/2002 18:00	58,525.96	48,403.90
5/15/2002 19:00	55,736.64	46,685.68
5/15/2002 20:00	53,634.03	45,493.24
5/15/2002 21:00	51,596.34	44,433.73
5/15/2002 22:00	48,797.02	43,187.72

DATE - TIME	G2-ENTR-MEAN	G3-ENTR-MEAN
5/15/2002 23:00	44,859.00	41,810.76
5/16/2002 0:00	42,948.67	40,431.82
5/16/2002 1:00	41,655.14	39,757.23
5/16/2002 2:00	40,881.02	39,225.49
5/16/2002 3:00	40,703.73	38,858.43
5/16/2002 4:00	40,548.90	38,765.18
5/16/2002 5:00	41,063.32	39,205.65
5/16/2002 6:00	43,478.07	40,380.23
5/16/2002 7:00	47,690.78	43,402.00
5/16/2002 8:00	52,562.74	47,649.94
5/16/2002 9:00	57,766.83	50,443.55
5/16/2002 10:00	62,144.35	53,360.16
5/16/2002 11:00	66,314.61	54,979.18
5/16/2002 12:00	67,800.42	56,040.67
5/16/2002 13:00	69,036.51	56,612.09
5/16/2002 14:00	70,921.87	57,296.60
5/16/2002 15:00	71,271.47	56,715.26
5/16/2002 16:00	71,134.13	56,004.95
5/16/2002 17:00	69,935.49	54,870.05
5/16/2002 18:00	67,043.78	52,901.84
5/16/2002 19:00	62,458.99	50,544.73
5/16/2002 20:00	59,617.22	48,955.48
5/16/2002 21:00	57,212.46	47,483.28
5/16/2002 22:00	53,701.45	46,096.40
5/16/2002 23:00	48,544.81	45,013.09
5/17/2002 0:00	46,454.69	43,614.30
5/17/2002 1:00	44,724.15	42,844.47
5/17/2002 2:00	43,977.50	42,471.47
5/17/2002 3:00	43,867.63	42,271.07
5/17/2002 4:00	43,607.92	41,957.59
5/17/2002 5:00	44,119.84	42,350.44
5/17/2002 6:00	47,076.48	44,157.94
5/17/2002 7:00	52,263.08	47,848.35
5/17/2002 8:00	57,594.52	51,225.28
5/17/2002 9:00	62,968.41	53,501.03
5/17/2002 10:00	66,164.78	54,897.83
5/17/2002 11:00	68,337.31	56,177.57
5/17/2002 12:00	70,267.62	57,266.84
5/17/2002 13:00	69,520.96	56,260.90
5/17/2002 14:00	68,267.39	55,719.25
5/17/2002 15:00	68,639.47	55,522.82
5/17/2002 16:00	68,189.98	54,901.80
5/17/2002 17:00	67,470.79	53,737.14
5/17/2002 18:00	64,901.22	51,596.30
5/17/2002 19:00	60,199.06	49,243.17
5/17/2002 20:00	57,207.46	47,765.02
5/17/2002 21:00	54,645.38	45,755.14
5/17/2002 22:00	51,299.18	44,370.24
5/17/2002 23:00	47,016.55	43,150.02
5/18/2002 0:00	44,581.82	41,699.65

DATE - TIME	G2-ENTR-MEAN	G3-ENTR-MEAN
5/18/2002 1:00	42,486.70	40,842.53
5/18/2002 2:00	40,803.61	40,233.41
5/18/2002 3:00	40,176.82	39,862.39
5/18/2002 4:00	39,592.49	39,350.49
5/18/2002 5:00	39,647.43	38,429.87
5/18/2002 6:00	40,346.63	38,548.92
5/18/2002 7:00	41,932.33	39,527.07
5/18/2002 8:00	43,970.01	40,160.00
5/18/2002 9:00	46,791.80	40,642.13
5/18/2002 10:00	48,427.44	40,943.71
5/18/2002 11:00	49,795.89	41,003.24
5/18/2002 12:00	49,880.79	41,031.01
5/18/2002 13:00	49,845.83	41,036.97
5/18/2002 14:00	49,231.53	40,673.88
5/18/2002 15:00	49,226.54	40,511.18
5/18/2002 16:00	48,602.25	40,241.35
5/18/2002 17:00	48,534.82	40,058.81
5/18/2002 18:00	48,255.14	40,019.13
5/18/2002 19:00	47,590.90	39,894.13
5/18/2002 20:00	47,543.45	39,707.63
5/18/2002 21:00	47,031.53	39,314.78
5/18/2002 22:00	46,409.74	39,213.59
5/18/2002 23:00	44,357.07	38,896.13

CAMBRIDGE ELECTRIC
HOURLY LOAD DATA

August 11 - 17, 2002

DATE - TIME	G2-ENTR-MEAN	G3-ENTR-MEAN
8/11/2002 0:00	53,481.83	46,943.09
8/11/2002 1:00	51,375.28	46,342.44
8/11/2002 2:00	49,651.48	45,728.29
8/11/2002 3:00	49,216.14	45,582.06
8/11/2002 4:00	48,789.57	45,363.85
8/11/2002 5:00	48,801.26	45,210.87
8/11/2002 6:00	49,461.57	45,728.29
8/11/2002 7:00	51,036.37	46,560.65
8/11/2002 8:00	53,604.55	48,097.15
8/11/2002 9:00	57,353.09	49,604.40
8/11/2002 10:00	60,336.16	50,987.93
8/11/2002 11:00	64,444.08	52,016.01
8/11/2002 12:00	67,646.27	52,456.94
8/11/2002 13:00	68,213.08	52,837.13
8/11/2002 14:00	69,057.45	52,976.60
8/11/2002 15:00	69,694.38	53,491.77
8/11/2002 16:00	69,650.56	53,374.79
8/11/2002 17:00	68,978.56	53,253.31
8/11/2002 18:00	69,536.61	54,366.88
8/11/2002 19:00	67,245.99	53,880.96
8/11/2002 20:00	64,113.92	52,909.11
8/11/2002 21:00	61,364.60	52,189.23
8/11/2002 22:00	59,868.68	51,590.83
8/11/2002 23:00	58,086.44	50,747.22
8/12/2002 0:00	56,242.85	49,856.36
8/12/2002 1:00	54,805.37	48,839.53
8/12/2002 2:00	54,080.78	48,452.59
8/12/2002 3:00	53,528.58	48,178.14
8/12/2002 4:00	53,306.53	48,081.40
8/12/2002 5:00	54,530.73	48,358.11
8/12/2002 6:00	58,112.74	51,059.92
8/12/2002 7:00	62,989.07	54,769.56
8/12/2002 8:00	68,896.76	58,177.75
8/12/2002 9:00	76,297.44	61,657.94
8/12/2002 10:00	81,734.73	64,350.75
8/12/2002 11:00	85,360.57	66,033.47
8/12/2002 12:00	88,180.02	67,884.92
8/12/2002 13:00	88,641.65	65,853.50
8/12/2002 14:00	88,144.96	66,834.34
8/12/2002 15:00	88,828.64	68,051.39
8/12/2002 16:00	90,423.89	67,914.17
8/12/2002 17:00	89,941.81	66,958.07
8/12/2002 18:00	87,738.84	65,318.09
8/12/2002 19:00	82,795.31	63,743.35
8/12/2002 20:00	77,956.97	60,821.07

DATE - TIME	G2-ENTR-MEAN	G3-ENTR-MEAN
8/12/2002 21:00	72,256.72	57,806.57
8/12/2002 22:00	68,575.37	56,348.80
8/12/2002 23:00	63,135.15	54,679.58
8/13/2002 0:00	60,809.47	53,570.51
8/13/2002 1:00	58,515.93	52,776.39
8/13/2002 2:00	57,347.25	52,186.98
8/13/2002 3:00	56,689.87	52,083.50
8/13/2002 4:00	57,212.85	52,303.96
8/13/2002 5:00	58,705.84	53,140.83
8/13/2002 6:00	61,867.13	54,868.54
8/13/2002 7:00	67,903.38	58,499.45
8/13/2002 8:00	73,700.04	61,970.64
8/13/2002 9:00	81,083.19	65,282.09
8/13/2002 10:00	86,719.16	67,943.41
8/13/2002 11:00	90,865.07	69,662.13
8/13/2002 12:00	91,762.03	69,497.91
8/13/2002 13:00	92,676.52	68,906.25
8/13/2002 14:00	93,482.91	69,806.11
8/13/2002 15:00	89,860.00	68,773.52
8/13/2002 16:00	86,774.68	66,330.42
8/13/2002 17:00	70,974.09	60,047.20
8/13/2002 18:00	86,383.17	64,593.71
8/13/2002 19:00	83,928.94	63,576.87
8/13/2002 20:00	80,902.05	61,786.17
8/13/2002 21:00	76,794.13	59,743.50
8/13/2002 22:00	72,963.77	58,778.41
8/13/2002 23:00	67,184.64	57,523.11
8/14/2002 0:00	63,523.74	56,000.11
8/14/2002 1:00	61,005.23	55,570.43
8/14/2002 2:00	59,611.57	54,963.03
8/14/2002 3:00	58,653.25	54,348.88
8/14/2002 4:00	58,586.06	54,056.43
8/14/2002 5:00	59,997.24	55,044.02
8/14/2002 6:00	63,219.88	56,328.56
8/14/2002 7:00	68,738.98	59,718.75
8/14/2002 8:00	74,988.51	63,241.68
8/14/2002 9:00	81,997.69	66,235.94
8/14/2002 10:00	87,423.30	68,622.80
8/14/2002 11:00	91,776.64	71,095.15
8/14/2002 12:00	93,965.00	72,181.72
8/14/2002 13:00	94,838.59	72,102.98
8/14/2002 14:00	94,943.77	71,551.82
8/14/2002 15:00	94,239.64	70,582.23
8/14/2002 16:00	93,006.68	70,186.29
8/14/2002 17:00	92,682.37	69,119.97
8/14/2002 18:00	90,984.86	67,104.30
8/14/2002 19:00	86,228.32	65,786.01
8/14/2002 20:00	82,736.88	64,429.48
8/14/2002 21:00	78,173.17	62,247.34
8/14/2002 22:00	72,423.26	59,532.03

DATE - TIME	G2-ENTR-MEAN	G3-ENTR-MEAN
8/14/2002 23:00	65,790.98	56,935.96
8/15/2002 0:00	63,395.18	55,161.00
8/15/2002 1:00	60,756.88	54,276.89
8/15/2002 2:00	59,263.89	53,390.54
8/15/2002 3:00	58,761.36	54,139.66
8/15/2002 4:00	58,653.25	53,370.29
8/15/2002 5:00	59,716.76	53,745.98
8/15/2002 6:00	62,769.94	55,460.20
8/15/2002 7:00	68,566.60	59,554.53
8/15/2002 8:00	74,442.16	63,525.13
8/15/2002 9:00	81,121.18	66,418.16
8/15/2002 10:00	86,269.22	68,993.99
8/15/2002 11:00	89,322.41	70,555.23
8/15/2002 12:00	91,110.49	71,500.08
8/15/2002 13:00	91,613.02	70,928.67
8/15/2002 14:00	92,559.66	71,421.34
8/15/2002 15:00	92,723.27	70,903.93
8/15/2002 16:00	92,948.24	70,559.73
8/15/2002 17:00	91,773.72	69,425.92
8/15/2002 18:00	90,347.92	68,267.36
8/15/2002 19:00	84,954.45	66,042.47
8/15/2002 20:00	81,509.76	64,114.54
8/15/2002 21:00	76,995.73	61,403.73
8/15/2002 22:00	73,285.16	59,592.77
8/15/2002 23:00	67,248.91	57,408.38
8/16/2002 0:00	63,573.41	55,851.63
8/16/2002 1:00	61,279.87	55,417.46
8/16/2002 2:00	60,131.64	55,581.68
8/16/2002 3:00	59,970.94	55,511.94
8/16/2002 4:00	60,613.72	55,631.17
8/16/2002 5:00	62,752.41	56,465.78
8/16/2002 6:00	66,950.90	58,782.91
8/16/2002 7:00	72,706.66	62,787.25
8/16/2002 8:00	77,860.55	66,123.46
8/16/2002 9:00	83,537.43	68,539.56
8/16/2002 10:00	88,390.38	70,845.44
8/16/2002 11:00	91,496.15	72,638.39
8/16/2002 12:00	93,363.12	73,239.05
8/16/2002 13:00	95,005.12	73,560.74
8/16/2002 14:00	95,715.10	73,697.97
8/16/2002 15:00	95,586.54	73,342.53
8/16/2002 16:00	94,575.63	72,397.68
8/16/2002 17:00	93,003.76	70,807.19
8/16/2002 18:00	90,231.06	68,674.54
8/16/2002 19:00	84,855.12	66,755.60
8/16/2002 20:00	81,790.25	64,769.18
8/16/2002 21:00	74,801.52	59,563.53
8/16/2002 22:00	70,167.70	56,688.50
8/16/2002 23:00	65,384.87	55,835.89
8/17/2002 0:00	64,911.55	56,877.47

DATE - TIME	G2-ENTR-MEAN	G3-ENTR-MEAN
8/17/2002 1:00	62,571.26	56,148.59
8/17/2002 2:00	60,385.83	55,095.76
8/17/2002 3:00	59,389.52	54,888.79
8/17/2002 4:00	58,846.09	54,393.87
8/17/2002 5:00	58,571.45	54,092.42
8/17/2002 6:00	60,438.42	54,450.11
8/17/2002 7:00	62,965.69	56,182.33
8/17/2002 8:00	66,828.19	57,712.08
8/17/2002 9:00	72,288.86	58,922.38
8/17/2002 10:00	75,099.54	59,745.75
8/17/2002 11:00	76,420.15	59,619.77
8/17/2002 12:00	76,589.61	59,118.10
8/17/2002 13:00	76,282.83	58,859.39
8/17/2002 14:00	74,564.87	58,038.28
8/17/2002 15:00	74,760.62	57,336.39
8/17/2002 16:00	75,347.88	57,741.33
8/17/2002 17:00	74,243.48	57,194.66
8/17/2002 18:00	72,940.40	56,058.60
8/17/2002 19:00	70,430.65	54,805.55
8/17/2002 20:00	67,920.91	53,314.05
8/17/2002 21:00	66,918.76	53,005.85
8/17/2002 22:00	65,341.04	53,131.83
8/17/2002 23:00	61,291.56	52,375.95

CAMBRIDGE ELECTRIC
HOURLY LOAD DATA

October 20 - 26, 2002

DATE - TIME	G2-ENTR-MEAN	G3-ENTR-MEAN
10/20/2002 0:00	45,299.24	41,531.64
10/20/2002 1:00	43,672.60	40,846.94
10/20/2002 2:00	42,205.17	40,378.34
10/20/2002 3:00	41,279.07	39,924.73
10/20/2002 4:00	41,000.44	39,473.25
10/20/2002 5:00	40,989.83	38,927.62
10/20/2002 6:00	41,637.30	38,938.32
10/20/2002 7:00	42,871.21	39,430.45
10/20/2002 8:00	43,998.99	39,926.87
10/20/2002 9:00	45,575.21	40,359.09
10/20/2002 10:00	46,931.19	41,473.87
10/20/2002 11:00	48,916.07	41,968.14
10/20/2002 12:00	50,643.55	42,652.85
10/20/2002 13:00	51,049.54	42,809.05
10/20/2002 14:00	50,802.76	42,708.48
10/20/2002 15:00	51,394.51	42,806.91
10/20/2002 16:00	51,362.67	42,896.77
10/20/2002 17:00	50,951.36	42,806.91
10/20/2002 18:00	50,333.08	42,494.51
10/20/2002 19:00	49,868.70	42,400.36
10/20/2002 20:00	48,077.54	41,856.88
10/20/2002 21:00	46,259.83	41,274.88
10/20/2002 22:00	45,588.48	40,617.99
10/20/2002 23:00	44,158.20	39,851.98
10/21/2002 0:00	43,163.11	38,784.26
10/21/2002 1:00	42,356.42	38,441.91
10/21/2002 2:00	41,889.39	38,270.73
10/21/2002 3:00	41,531.16	38,420.51
10/21/2002 4:00	41,422.36	38,431.21
10/21/2002 5:00	42,574.01	38,628.07
10/21/2002 6:00	45,108.18	40,857.64
10/21/2002 7:00	49,438.82	43,684.18
10/21/2002 8:00	53,299.78	46,335.28
10/21/2002 9:00	56,969.68	48,566.99
10/21/2002 10:00	60,002.72	49,037.72
10/21/2002 11:00	62,637.72	50,486.30
10/21/2002 12:00	63,372.76	50,952.76
10/21/2002 13:00	63,455.02	51,098.26
10/21/2002 14:00	63,593.01	51,524.06
10/21/2002 15:00	63,194.97	51,145.33
10/21/2002 16:00	62,409.51	50,725.95
10/21/2002 17:00	61,406.46	49,983.47
10/21/2002 18:00	59,641.83	48,062.02

DATE - TIME	G2-ENTR-MEAN	G3-ENTR-MEAN
10/21/2002 19:00	57,250.96	46,236.85
10/21/2002 20:00	55,488.98	45,423.76
10/21/2002 21:00	53,023.81	44,238.37
10/21/2002 22:00	50,574.55	43,527.99
10/21/2002 23:00	46,519.89	42,492.37
10/22/2002 0:00	44,805.67	41,471.73
10/22/2002 1:00	43,723.01	40,930.39
10/22/2002 2:00	43,080.85	40,579.47
10/22/2002 3:00	42,682.81	40,027.43
10/22/2002 4:00	42,751.80	40,089.48
10/22/2002 5:00	43,730.97	40,012.45
10/22/2002 6:00	45,999.78	41,289.86
10/22/2002 7:00	50,574.55	44,681.29
10/22/2002 8:00	54,440.82	47,090.59
10/22/2002 9:00	57,980.69	49,189.64
10/22/2002 10:00	60,451.17	50,015.57
10/22/2002 11:00	62,075.16	50,071.20
10/22/2002 12:00	62,483.81	50,381.46
10/22/2002 13:00	62,735.90	50,220.98
10/22/2002 14:00	62,895.12	50,681.01
10/22/2002 15:00	62,759.79	50,678.87
10/22/2002 16:00	62,178.65	49,859.37
10/22/2002 17:00	61,226.02	49,039.86
10/22/2002 18:00	60,268.08	47,381.59
10/22/2002 19:00	58,323.00	46,555.67
10/22/2002 20:00	56,316.90	45,659.13
10/22/2002 21:00	53,665.97	44,623.51
10/22/2002 22:00	51,060.16	42,958.83
10/22/2002 23:00	47,143.48	41,966.00
10/23/2002 0:00	45,248.82	40,609.43
10/23/2002 1:00	44,176.78	39,933.28
10/23/2002 2:00	43,324.98	39,909.75
10/23/2002 3:00	42,871.21	39,762.11
10/23/2002 4:00	42,788.95	39,618.75
10/23/2002 5:00	43,959.18	39,762.11
10/23/2002 6:00	46,212.07	40,799.86
10/23/2002 7:00	50,943.40	44,088.59
10/23/2002 8:00	54,764.55	46,930.11
10/23/2002 9:00	58,394.65	49,437.85
10/23/2002 10:00	61,796.54	50,944.20
10/23/2002 11:00	63,356.84	51,656.72
10/23/2002 12:00	63,409.91	51,962.70
10/23/2002 13:00	63,240.08	51,365.72
10/23/2002 14:00	63,107.40	50,929.22
10/23/2002 15:00	62,653.64	49,979.19
10/23/2002 16:00	61,841.65	50,139.67
10/23/2002 17:00	60,910.24	49,377.94
10/23/2002 18:00	59,761.24	47,608.40
10/23/2002 19:00	58,108.06	46,181.22

DATE - TIME	G2-ENTR-MEAN	G3-ENTR-MEAN
10/23/2002 20:00	56,340.78	45,432.32
10/23/2002 21:00	53,995.02	44,475.87
10/23/2002 22:00	51,455.54	43,328.99
10/23/2002 23:00	47,578.66	42,058.01
10/24/2002 0:00	46,148.38	40,911.13
10/24/2002 1:00	44,864.05	40,656.50
10/24/2002 2:00	44,235.15	40,230.70
10/24/2002 3:00	43,550.53	39,956.82
10/24/2002 4:00	43,624.83	39,871.23
10/24/2002 5:00	44,643.81	39,976.08
10/24/2002 6:00	47,533.55	41,349.77
10/24/2002 7:00	52,118.94	44,914.51
10/24/2002 8:00	56,030.31	47,542.07
10/24/2002 9:00	59,063.35	49,602.60
10/24/2002 10:00	62,194.57	50,802.98
10/24/2002 11:00	63,545.25	51,590.39
10/24/2002 12:00	63,696.50	51,643.88
10/24/2002 13:00	63,624.85	51,566.85
10/24/2002 14:00	63,953.90	51,821.48
10/24/2002 15:00	64,006.97	51,830.04
10/24/2002 16:00	62,807.55	50,805.12
10/24/2002 17:00	61,371.96	49,829.41
10/24/2002 18:00	59,912.50	47,882.28
10/24/2002 19:00	58,084.18	45,975.81
10/24/2002 20:00	56,701.67	45,128.48
10/24/2002 21:00	54,111.77	44,191.29
10/24/2002 22:00	51,731.51	43,363.23
10/24/2002 23:00	47,639.70	41,953.16
10/25/2002 0:00	45,652.17	40,641.53
10/25/2002 1:00	44,367.83	40,179.35
10/25/2002 2:00	44,017.56	39,702.20
10/25/2002 3:00	43,497.46	39,370.54
10/25/2002 4:00	43,309.06	39,319.19
10/25/2002 5:00	44,540.32	39,165.13
10/25/2002 6:00	47,172.67	40,438.25
10/25/2002 7:00	51,869.50	43,966.63
10/25/2002 8:00	56,011.74	46,930.11
10/25/2002 9:00	59,275.64	48,815.19
10/25/2002 10:00	61,621.40	50,248.79
10/25/2002 11:00	62,778.36	51,014.81
10/25/2002 12:00	63,298.46	51,397.82
10/25/2002 13:00	63,378.07	51,239.48
10/25/2002 14:00	63,311.73	51,230.92
10/25/2002 15:00	62,842.05	50,788.00
10/25/2002 16:00	61,329.51	49,675.35
10/25/2002 17:00	59,806.35	48,305.94
10/25/2002 18:00	58,532.64	46,761.08
10/25/2002 19:00	56,622.06	45,259.01
10/25/2002 20:00	55,011.34	44,172.04

DATE - TIME	G2-ENTR-MEAN	G3-ENTR-MEAN
10/25/2002 21:00	52,729.26	43,679.91
10/25/2002 22:00	50,510.87	42,877.52
10/25/2002 23:00	46,902.00	41,617.23
10/26/2002 0:00	45,023.27	40,513.14
10/26/2002 1:00	43,590.33	39,830.58
10/26/2002 2:00	42,780.99	39,406.92
10/26/2002 3:00	42,274.16	39,205.79
10/26/2002 4:00	41,990.23	39,098.80
10/26/2002 5:00	41,754.06	38,901.95
10/26/2002 6:00	42,903.06	39,306.35
10/26/2002 7:00	44,903.86	40,506.73
10/26/2002 8:00	46,612.76	40,523.84
10/26/2002 9:00	48,385.35	40,117.30
10/26/2002 10:00	50,126.10	40,331.27
10/26/2002 11:00	51,081.39	40,654.36
10/26/2002 12:00	51,643.95	41,182.87
10/26/2002 13:00	51,551.07	41,443.92
10/26/2002 14:00	51,259.18	41,277.02
10/26/2002 15:00	51,338.78	42,355.43
10/26/2002 16:00	51,269.79	42,505.21
10/26/2002 17:00	51,267.14	42,398.22
10/26/2002 18:00	50,914.21	42,135.04
10/26/2002 19:00	50,550.67	41,852.60
10/26/2002 20:00	49,900.54	41,041.65
10/26/2002 21:00	48,966.48	40,577.34
10/26/2002 22:00	48,175.72	40,232.84
10/26/2002 23:00	45,633.59	39,982.50

COMMONWEALTH ELECTRIC
HOURLY LOAD DATA

January 13 - 19, 2002

DATE - TIME	G2-ENTR-MEAN	G3-ENTR-MEAN
1/13/2002 0:00	45,414.78	33,260.57
1/13/2002 1:00	43,182.08	32,928.17
1/13/2002 2:00	42,386.19	32,552.58
1/13/2002 3:00	41,998.82	32,325.35
1/13/2002 4:00	41,665.44	32,208.92
1/13/2002 5:00	42,071.60	32,387.32
1/13/2002 6:00	43,339.38	32,488.73
1/13/2002 7:00	45,565.04	33,561.05
1/13/2002 8:00	48,208.60	34,075.61
1/13/2002 9:00	49,640.73	33,970.44
1/13/2002 10:00	51,558.83	33,797.67
1/13/2002 11:00	52,509.67	33,273.72
1/13/2002 12:00	53,251.56	33,949.79
1/13/2002 13:00	53,314.95	35,423.99
1/13/2002 14:00	52,873.57	34,364.82
1/13/2002 15:00	51,995.51	34,011.76
1/13/2002 16:00	52,180.99	34,505.66
1/13/2002 17:00	53,265.65	34,993.93
1/13/2002 18:00	53,237.47	35,352.62
1/13/2002 19:00	51,638.66	35,290.65
1/13/2002 20:00	50,502.35	34,971.40
1/13/2002 21:00	49,314.39	35,281.26
1/13/2002 22:00	47,497.23	35,994.89
1/13/2002 23:00	45,893.72	36,162.02
1/14/2002 0:00	44,374.73	37,671.91
1/14/2002 1:00	44,020.22	39,311.37
1/14/2002 2:00	43,881.71	39,527.33
1/14/2002 3:00	43,468.50	39,457.85
1/14/2002 4:00	44,015.53	39,300.10
1/14/2002 5:00	45,365.48	40,079.45
1/14/2002 6:00	49,969.41	41,835.35
1/14/2002 7:00	58,491.73	47,003.50
1/14/2002 8:00	67,856.88	52,263.66
1/14/2002 9:00	72,183.78	54,859.01
1/14/2002 10:00	74,411.79	56,440.25
1/14/2002 11:00	75,825.13	56,813.97
1/14/2002 12:00	75,336.80	56,162.31
1/14/2002 13:00	74,409.44	55,666.53
1/14/2002 14:00	74,205.18	56,154.80
1/14/2002 15:00	71,578.06	54,534.12
1/14/2002 16:00	68,394.52	51,921.88
1/14/2002 17:00	66,694.75	51,191.35
1/14/2002 18:00	65,572.53	51,024.21
1/14/2002 19:00	64,189.70	51,031.72

DATE - TIME	G2-ENTR-MEAN	G3-ENTR-MEAN
1/14/2002 20:00	62,595.58	50,847.68
1/14/2002 21:00	60,604.70	50,141.57
1/14/2002 22:00	57,165.25	48,975.35
1/14/2002 23:00	52,509.67	46,749.97
1/15/2002 0:00	49,593.77	44,545.24
1/15/2002 1:00	47,283.59	43,685.14
1/15/2002 2:00	46,450.14	43,792.18
1/15/2002 3:00	45,851.47	43,236.30
1/15/2002 4:00	45,943.03	43,292.64
1/15/2002 5:00	47,013.60	43,735.84
1/15/2002 6:00	50,676.08	45,880.47
1/15/2002 7:00	58,951.88	50,425.14
1/15/2002 8:00	68,657.46	55,536.95
1/15/2002 9:00	73,179.22	57,029.93
1/15/2002 10:00	75,451.84	58,121.03
1/15/2002 11:00	76,170.25	57,997.08
1/15/2002 12:00	75,935.47	58,926.67
1/15/2002 13:00	75,073.85	58,246.85
1/15/2002 14:00	75,219.41	58,716.34
1/15/2002 15:00	73,315.39	57,058.10
1/15/2002 16:00	69,946.38	55,219.58
1/15/2002 17:00	67,699.58	53,698.43
1/15/2002 18:00	65,861.30	52,691.84
1/15/2002 19:00	64,257.79	51,792.30
1/15/2002 20:00	62,543.93	51,704.03
1/15/2002 21:00	60,398.10	51,146.28
1/15/2002 22:00	56,923.43	50,395.09
1/15/2002 23:00	52,216.20	47,886.14
1/16/2002 0:00	49,520.99	44,710.50
1/16/2002 1:00	47,227.24	44,088.90
1/16/2002 2:00	46,461.88	42,719.87
1/16/2002 3:00	45,950.07	42,120.80
1/16/2002 4:00	46,062.76	41,786.52
1/16/2002 5:00	47,098.12	42,331.13
1/16/2002 6:00	50,983.64	44,195.94
1/16/2002 7:00	59,212.48	49,048.60
1/16/2002 8:00	68,272.43	53,488.10
1/16/2002 9:00	72,911.58	56,355.74
1/16/2002 10:00	75,402.54	57,274.07
1/16/2002 11:00	76,459.02	57,501.30
1/16/2002 12:00	76,142.07	57,721.02
1/16/2002 13:00	75,289.84	56,851.52
1/16/2002 14:00	74,745.17	57,309.75
1/16/2002 15:00	73,026.62	55,955.74
1/16/2002 16:00	69,401.70	53,170.72
1/16/2002 17:00	67,267.60	52,308.74
1/16/2002 18:00	66,042.07	51,313.42
1/16/2002 19:00	64,271.87	51,756.62
1/16/2002 20:00	62,635.50	51,375.39

DATE - TIME	G2-ENTR-MEAN	G3-ENTR-MEAN
1/16/2002 21:00	60,686.87	50,999.80
1/16/2002 22:00	57,254.46	50,145.32
1/16/2002 23:00	52,934.61	46,475.79
1/17/2002 0:00	49,915.41	44,188.43
1/17/2002 1:00	47,753.14	43,726.45
1/17/2002 2:00	47,062.90	43,198.75
1/17/2002 3:00	46,783.52	42,785.59
1/17/2002 4:00	46,501.79	42,302.96
1/17/2002 5:00	47,645.14	42,650.38
1/17/2002 6:00	50,854.51	44,483.27
1/17/2002 7:00	58,768.76	48,475.82
1/17/2002 8:00	68,903.98	53,957.59
1/17/2002 9:00	73,620.60	56,002.69
1/17/2002 10:00	75,724.18	57,927.60
1/17/2002 11:00	76,541.19	58,036.52
1/17/2002 12:00	76,231.29	57,803.65
1/17/2002 13:00	75,362.62	57,580.17
1/17/2002 14:00	74,909.51	57,264.68
1/17/2002 15:00	72,777.76	55,069.34
1/17/2002 16:00	69,563.69	53,031.75
1/17/2002 17:00	67,091.52	51,377.27
1/17/2002 18:00	65,534.96	50,620.45
1/17/2002 19:00	64,142.75	50,117.16
1/17/2002 20:00	62,459.42	49,508.70
1/17/2002 21:00	60,825.38	49,131.23
1/17/2002 22:00	57,557.32	48,160.32
1/17/2002 23:00	52,906.44	45,247.60
1/18/2002 0:00	49,807.42	43,461.66
1/18/2002 1:00	47,386.89	41,961.17
1/18/2002 2:00	46,790.56	42,284.18
1/18/2002 3:00	46,454.84	42,952.73
1/18/2002 4:00	46,389.10	42,257.89
1/18/2002 5:00	47,565.32	42,293.57
1/18/2002 6:00	51,192.59	43,392.18
1/18/2002 7:00	59,233.61	47,206.32
1/18/2002 8:00	68,352.26	52,641.14
1/18/2002 9:00	72,491.33	55,264.65
1/18/2002 10:00	74,458.74	55,880.62
1/18/2002 11:00	75,348.54	56,592.37
1/18/2002 12:00	74,864.90	55,792.35
1/18/2002 13:00	73,557.21	54,327.54
1/18/2002 14:00	72,688.54	54,397.03
1/18/2002 15:00	70,871.39	52,708.74
1/18/2002 16:00	67,556.37	49,970.67
1/18/2002 17:00	66,079.64	48,937.80
1/18/2002 18:00	65,445.75	49,818.56
1/18/2002 19:00	64,128.66	48,806.34
1/18/2002 20:00	62,264.55	47,955.62
1/18/2002 21:00	60,717.39	47,380.97

DATE - TIME	G2-ENTR-MEAN	G3-ENTR-MEAN
1/18/2002 22:00	57,193.42	46,494.57
1/18/2002 23:00	52,493.24	43,149.92
1/19/2002 0:00	49,610.21	39,324.51
1/19/2002 1:00	47,318.81	38,160.18
1/19/2002 2:00	46,194.24	37,510.40
1/19/2002 3:00	45,461.74	37,397.72
1/19/2002 4:00	45,581.47	37,024.01
1/19/2002 5:00	46,367.97	37,123.54
1/19/2002 6:00	48,180.43	37,172.37
1/19/2002 7:00	51,579.96	38,396.80
1/19/2002 8:00	55,049.93	38,580.84
1/19/2002 9:00	56,841.26	38,864.41
1/19/2002 10:00	58,919.02	39,617.47
1/19/2002 11:00	59,151.44	39,831.56
1/19/2002 12:00	58,815.71	39,685.08
1/19/2002 13:00	58,348.51	39,091.64
1/19/2002 14:00	58,017.48	38,120.74
1/19/2002 15:00	57,179.34	37,136.69
1/19/2002 16:00	57,301.42	37,012.74
1/19/2002 17:00	58,782.85	37,442.79
1/19/2002 18:00	58,557.46	37,288.80
1/19/2002 19:00	57,606.63	37,093.49
1/19/2002 20:00	56,613.53	37,912.28
1/19/2002 21:00	55,291.75	37,739.51
1/19/2002 22:00	52,676.36	36,905.70
1/19/2002 23:00	48,896.49	35,324.45

COMMONWEALTH ELECTRIC
HOURLY LOAD DATA

May 12 - 18, 2002

DATE - TIME	G2-ENTR-MEAN	G3-ENTR-MEAN
5/12/2002 0:00	43,925.52	34,698.96
5/12/2002 1:00	41,392.68	34,452.61
5/12/2002 2:00	40,809.20	34,301.94
5/12/2002 3:00	40,284.07	34,426.14
5/12/2002 4:00	39,833.19	34,344.70
5/12/2002 5:00	39,907.46	34,157.39
5/12/2002 6:00	41,122.16	33,837.74
5/12/2002 7:00	42,355.42	33,583.25
5/12/2002 8:00	45,267.53	33,794.99
5/12/2002 9:00	46,824.36	33,919.18
5/12/2002 10:00	48,956.72	34,487.22
5/12/2002 11:00	50,078.59	34,914.77
5/12/2002 12:00	50,680.64	35,639.57
5/12/2002 13:00	50,770.81	35,839.10
5/12/2002 14:00	50,815.90	35,387.11
5/12/2002 15:00	49,855.81	35,093.93
5/12/2002 16:00	49,235.20	35,026.75
5/12/2002 17:00	49,412.89	35,205.91
5/12/2002 18:00	49,015.07	34,935.13
5/12/2002 19:00	47,333.58	34,705.07
5/12/2002 20:00	46,402.66	34,627.70
5/12/2002 21:00	46,354.92	35,167.23
5/12/2002 22:00	44,519.61	36,254.44
5/12/2002 23:00	42,854.04	36,380.66
5/13/2002 0:00	41,970.86	37,154.33
5/13/2002 1:00	41,419.20	37,771.23
5/13/2002 2:00	41,185.81	37,883.21
5/13/2002 3:00	40,758.81	38,027.76
5/13/2002 4:00	40,981.59	37,964.65
5/13/2002 5:00	42,225.47	38,669.09
5/13/2002 6:00	46,246.18	41,230.33
5/13/2002 7:00	54,295.57	47,301.58
5/13/2002 8:00	65,166.88	54,663.63
5/13/2002 9:00	70,964.56	57,925.25
5/13/2002 10:00	73,773.23	58,723.35
5/13/2002 11:00	75,226.63	59,157.01
5/13/2002 12:00	75,637.72	59,751.51
5/13/2002 13:00	74,979.97	58,652.09
5/13/2002 14:00	74,454.84	58,385.38
5/13/2002 15:00	72,126.22	57,418.29
5/13/2002 16:00	68,829.55	54,995.50
5/13/2002 17:00	65,458.62	53,034.86
5/13/2002 18:00	62,745.44	51,632.08
5/13/2002 19:00	61,329.17	51,283.93
5/13/2002 20:00	60,109.16	51,330.76

DATE - TIME	G2-ENTR-MEAN	G3-ENTR-MEAN
5/13/2002 21:00	58,390.55	49,850.61
5/13/2002 22:00	55,242.40	47,332.12
5/13/2002 23:00	51,203.12	46,483.12
5/14/2002 0:00	48,503.19	44,355.54
5/14/2002 1:00	45,845.70	43,256.12
5/14/2002 2:00	44,901.52	42,482.45
5/14/2002 3:00	44,262.35	42,592.40
5/14/2002 4:00	44,339.26	42,515.03
5/14/2002 5:00	44,957.22	43,095.28
5/14/2002 6:00	48,413.02	44,581.53
5/14/2002 7:00	56,568.49	49,984.99
5/14/2002 8:00	66,763.50	56,086.77
5/14/2002 9:00	71,025.56	58,006.69
5/14/2002 10:00	73,799.75	59,503.12
5/14/2002 11:00	75,170.93	59,973.43
5/14/2002 12:00	75,536.93	60,384.70
5/14/2002 13:00	74,449.54	58,819.04
5/14/2002 14:00	74,377.93	58,778.32
5/14/2002 15:00	72,688.48	57,965.97
5/14/2002 16:00	69,537.69	55,862.82
5/14/2002 17:00	66,018.23	54,679.92
5/14/2002 18:00	62,504.09	53,613.08
5/14/2002 19:00	60,687.34	51,662.62
5/14/2002 20:00	59,233.94	51,224.89
5/14/2002 21:00	58,395.85	50,695.54
5/14/2002 22:00	55,321.97	49,724.38
5/14/2002 23:00	51,431.21	47,478.71
5/15/2002 0:00	48,251.24	45,426.46
5/15/2002 1:00	45,832.44	44,255.78
5/15/2002 2:00	45,050.05	43,752.90
5/15/2002 3:00	44,307.43	43,956.49
5/15/2002 4:00	43,827.39	43,659.24
5/15/2002 5:00	44,835.22	44,534.71
5/15/2002 6:00	47,877.28	45,790.90
5/15/2002 7:00	56,032.75	50,722.00
5/15/2002 8:00	66,105.76	56,677.20
5/15/2002 9:00	70,834.61	58,513.64
5/15/2002 10:00	72,919.22	58,430.17
5/15/2002 11:00	74,961.41	60,073.19
5/15/2002 12:00	74,937.54	61,349.74
5/15/2002 13:00	72,913.92	59,275.09
5/15/2002 14:00	73,497.40	59,305.63
5/15/2002 15:00	72,155.40	59,087.79
5/15/2002 16:00	69,007.25	57,218.77
5/15/2002 17:00	66,198.58	55,699.94
5/15/2002 18:00	63,228.13	54,115.96
5/15/2002 19:00	61,424.65	52,415.93
5/15/2002 20:00	59,732.55	52,191.97
5/15/2002 21:00	59,072.16	50,935.78
5/15/2002 22:00	55,613.71	50,037.92

DATE - TIME	G2-ENTR-MEAN	G3-ENTR-MEAN
5/15/2002 23:00	51,287.99	47,527.58
5/16/2002 0:00	48,325.50	45,516.04
5/16/2002 1:00	45,278.13	45,131.24
5/16/2002 2:00	44,689.35	44,426.80
5/16/2002 3:00	44,180.13	44,196.74
5/16/2002 4:00	43,771.69	44,270.03
5/16/2002 5:00	44,721.17	44,836.03
5/16/2002 6:00	48,190.23	45,754.25
5/16/2002 7:00	56,236.97	50,801.41
5/16/2002 8:00	66,397.50	56,630.38
5/16/2002 9:00	72,142.13	59,723.01
5/16/2002 10:00	75,200.11	60,372.48
5/16/2002 11:00	77,510.16	61,333.46
5/16/2002 12:00	78,048.55	62,290.36
5/16/2002 13:00	77,982.25	61,714.18
5/16/2002 14:00	78,899.91	62,259.82
5/16/2002 15:00	77,120.29	60,460.03
5/16/2002 16:00	73,250.75	58,700.95
5/16/2002 17:00	69,129.25	56,194.68
5/16/2002 18:00	65,970.50	55,701.98
5/16/2002 19:00	64,395.10	53,944.94
5/16/2002 20:00	61,904.69	53,203.85
5/16/2002 21:00	60,445.99	52,992.11
5/16/2002 22:00	56,966.32	51,774.60
5/16/2002 23:00	52,542.47	49,247.97
5/17/2002 0:00	49,229.89	46,943.25
5/17/2002 1:00	46,938.40	46,334.50
5/17/2002 2:00	45,705.14	45,198.43
5/17/2002 3:00	44,782.17	45,037.59
5/17/2002 4:00	44,572.65	45,102.74
5/17/2002 5:00	45,328.53	46,023.00
5/17/2002 6:00	49,076.07	47,535.72
5/17/2002 7:00	56,889.41	51,896.76
5/17/2002 8:00	66,893.46	57,872.31
5/17/2002 9:00	72,884.75	59,374.86
5/17/2002 10:00	75,836.63	60,117.98
5/17/2002 11:00	77,427.94	60,390.80
5/17/2002 12:00	77,512.81	61,724.36
5/17/2002 13:00	77,271.46	61,105.43
5/17/2002 14:00	78,342.95	61,799.69
5/17/2002 15:00	76,677.37	60,229.96
5/17/2002 16:00	73,086.31	58,625.62
5/17/2002 17:00	68,784.47	55,773.23
5/17/2002 18:00	66,599.06	53,106.12
5/17/2002 19:00	63,671.05	52,415.93
5/17/2002 20:00	61,910.00	52,316.17
5/17/2002 21:00	60,278.90	51,102.73
5/17/2002 22:00	56,892.06	50,101.04
5/17/2002 23:00	51,911.25	46,898.46
5/18/2002 0:00	44,581.82	41,699.65

DATE - TIME	G2-ENTR-MEAN	G3-ENTR-MEAN
5/18/2002 1:00	42,486.70	40,842.53
5/18/2002 2:00	40,803.61	40,233.41
5/18/2002 3:00	40,176.82	39,862.39
5/18/2002 4:00	39,592.49	39,350.49
5/18/2002 5:00	39,647.43	38,429.87
5/18/2002 6:00	40,346.63	38,548.92
5/18/2002 7:00	41,932.33	39,527.07
5/18/2002 8:00	43,970.01	40,160.00
5/18/2002 9:00	46,791.80	40,642.13
5/18/2002 10:00	48,427.44	40,943.71
5/18/2002 11:00	49,795.89	41,003.24
5/18/2002 12:00	49,880.79	41,031.01
5/18/2002 13:00	49,845.83	41,036.97
5/18/2002 14:00	49,231.53	40,673.88
5/18/2002 15:00	49,226.54	40,511.18
5/18/2002 16:00	48,602.25	40,241.35
5/18/2002 17:00	48,534.82	40,058.81
5/18/2002 18:00	48,255.14	40,019.13
5/18/2002 19:00	47,590.90	39,894.13
5/18/2002 20:00	47,543.45	39,707.63
5/18/2002 21:00	47,031.53	39,314.78
5/18/2002 22:00	46,409.74	39,213.59
5/18/2002 23:00	44,357.07	38,896.13

COMMONWEALTH ELECTRIC
HOURLY LOAD DATA

August 11 - 17, 2002

DATE - TIME	G2-ENTR-MEAN	G3-ENTR-MEAN
8/11/2002 0:00	54,936.67	35,987.54
8/11/2002 1:00	51,917.29	35,015.95
8/11/2002 2:00	50,559.18	34,620.84
8/11/2002 3:00	49,736.28	34,599.25
8/11/2002 4:00	49,114.46	34,160.96
8/11/2002 5:00	49,055.68	34,143.68
8/11/2002 6:00	50,565.37	34,176.07
8/11/2002 7:00	52,059.59	34,467.54
8/11/2002 8:00	56,706.23	35,048.34
8/11/2002 9:00	60,820.75	35,994.01
8/11/2002 10:00	63,849.42	36,605.03
8/11/2002 11:00	67,425.65	38,204.91
8/11/2002 12:00	69,145.71	39,271.50
8/11/2002 13:00	69,869.62	38,528.77
8/11/2002 14:00	70,346.04	38,524.45
8/11/2002 15:00	70,407.91	38,299.91
8/11/2002 16:00	70,008.83	38,420.82
8/11/2002 17:00	69,424.14	38,546.05
8/11/2002 18:00	68,353.74	38,438.09
8/11/2002 19:00	64,904.34	38,101.28
8/11/2002 20:00	61,977.77	37,324.01
8/11/2002 21:00	61,488.98	37,360.71
8/11/2002 22:00	59,697.76	37,354.23
8/11/2002 23:00	56,597.95	37,319.69
8/12/2002 0:00	54,370.54	37,306.73
8/12/2002 1:00	52,962.93	37,665.14
8/12/2002 2:00	52,452.48	37,246.28
8/12/2002 3:00	51,796.64	37,349.92
8/12/2002 4:00	51,833.76	36,993.67
8/12/2002 5:00	53,015.53	38,379.80
8/12/2002 6:00	58,664.49	40,763.42
8/12/2002 7:00	68,096.97	46,687.93
8/12/2002 8:00	77,854.27	52,469.95
8/12/2002 9:00	84,598.39	56,334.70
8/12/2002 10:00	89,990.58	59,182.53
8/12/2002 11:00	93,090.40	61,790.69
8/12/2002 12:00	94,284.54	61,833.88
8/12/2002 13:00	95,259.03	60,786.72
8/12/2002 14:00	96,097.41	61,615.81
8/12/2002 15:00	94,844.49	61,680.58
8/12/2002 16:00	91,998.35	58,942.87
8/12/2002 17:00	87,122.79	55,306.98
8/12/2002 18:00	83,806.42	52,834.83
8/12/2002 19:00	80,941.72	52,318.81
8/12/2002 20:00	78,064.64	50,645.53

DATE - TIME	G2-ENTR-MEAN	G3-ENTR-MEAN
8/12/2002 21:00	76,208.46	50,503.03
8/12/2002 22:00	71,914.51	49,600.53
8/12/2002 23:00	66,293.38	48,097.81
8/13/2002 0:00	62,361.38	46,577.82
8/13/2002 1:00	59,060.48	45,411.92
8/13/2002 2:00	57,541.51	45,036.24
8/13/2002 3:00	56,430.89	44,543.97
8/13/2002 4:00	55,539.93	44,019.31
8/13/2002 5:00	56,350.46	45,543.62
8/13/2002 6:00	60,653.70	47,473.84
8/13/2002 7:00	69,996.46	51,837.34
8/13/2002 8:00	79,880.60	57,213.45
8/13/2002 9:00	88,004.47	59,787.07
8/13/2002 10:00	93,869.99	61,756.15
8/13/2002 11:00	97,873.15	63,956.25
8/13/2002 12:00	99,240.53	64,215.34
8/13/2002 13:00	98,847.64	63,289.10
8/13/2002 14:00	100,601.73	63,999.43
8/13/2002 15:00	99,348.81	63,112.05
8/13/2002 16:00	95,818.98	60,788.88
8/13/2002 17:00	90,624.78	57,425.04
8/13/2002 18:00	86,426.72	54,365.62
8/13/2002 19:00	83,085.60	53,564.60
8/13/2002 20:00	80,372.49	52,994.60
8/13/2002 21:00	78,541.06	52,651.31
8/13/2002 22:00	74,231.63	52,230.29
8/13/2002 23:00	68,443.45	50,906.78
8/14/2002 0:00	64,041.22	48,078.38
8/14/2002 1:00	60,393.83	46,968.61
8/14/2002 2:00	59,165.66	46,258.28
8/14/2002 3:00	58,314.91	45,247.83
8/14/2002 4:00	57,417.76	45,677.48
8/14/2002 5:00	58,531.47	46,146.01
8/14/2002 6:00	63,437.96	48,343.95
8/14/2002 7:00	72,777.63	53,633.69
8/14/2002 8:00	82,896.89	58,215.26
8/14/2002 9:00	90,163.83	60,374.34
8/14/2002 10:00	95,905.60	63,481.25
8/14/2002 11:00	98,334.10	65,048.75
8/14/2002 12:00	99,797.39	66,003.06
8/14/2002 13:00	100,069.63	65,940.45
8/14/2002 14:00	101,347.30	66,866.69
8/14/2002 15:00	99,754.08	65,452.49
8/14/2002 16:00	94,909.45	61,393.42
8/14/2002 17:00	90,634.06	59,601.39
8/14/2002 18:00	87,159.91	56,917.65
8/14/2002 19:00	84,109.59	55,315.62
8/14/2002 20:00	80,981.93	54,728.35
8/14/2002 21:00	79,398.00	54,382.89
8/14/2002 22:00	74,890.58	53,989.94
8/14/2002 23:00	69,281.83	51,707.79

DATE - TIME	G2-ENTR-MEAN	G3-ENTR-MEAN
8/15/2002 0:00	64,728.01	48,650.54
8/15/2002 1:00	60,823.85	47,538.61
8/15/2002 2:00	59,840.07	46,826.12
8/15/2002 3:00	58,327.29	46,189.19
8/15/2002 4:00	57,674.53	46,269.07
8/15/2002 5:00	58,809.89	47,959.63
8/15/2002 6:00	63,932.94	50,392.91
8/15/2002 7:00	73,424.20	55,449.48
8/15/2002 8:00	82,723.65	60,465.02
8/15/2002 9:00	88,731.48	63,522.28
8/15/2002 10:00	93,316.23	64,422.61
8/15/2002 11:00	95,976.76	65,836.81
8/15/2002 12:00	97,409.11	65,292.72
8/15/2002 13:00	96,700.66	65,534.54
8/15/2002 14:00	97,767.97	65,992.26
8/15/2002 15:00	96,787.29	64,498.18
8/15/2002 16:00	93,774.09	62,218.19
8/15/2002 17:00	89,353.29	58,701.05
8/15/2002 18:00	85,937.93	56,203.00
8/15/2002 19:00	83,169.13	54,523.23
8/15/2002 20:00	80,644.73	54,261.98
8/15/2002 21:00	78,680.27	54,512.44
8/15/2002 22:00	75,088.57	53,933.80
8/15/2002 23:00	68,929.15	51,690.52
8/16/2002 0:00	64,622.82	48,635.42
8/16/2002 1:00	61,037.31	47,612.02
8/16/2002 2:00	60,106.12	46,940.55
8/16/2002 3:00	58,856.30	46,867.14
8/16/2002 4:00	58,596.43	46,970.77
8/16/2002 5:00	59,753.45	47,314.07
8/16/2002 6:00	65,352.92	49,179.51
8/16/2002 7:00	74,435.81	54,477.89
8/16/2002 8:00	83,849.73	59,476.16
8/16/2002 9:00	89,105.80	61,553.20
8/16/2002 10:00	92,889.31	64,267.16
8/16/2002 11:00	95,169.32	63,992.96
8/16/2002 12:00	95,880.85	63,761.93
8/16/2002 13:00	96,165.47	63,455.34
8/16/2002 14:00	96,542.89	64,122.50
8/16/2002 15:00	95,667.39	62,999.78
8/16/2002 16:00	92,267.49	60,270.70
8/16/2002 17:00	88,187.00	57,574.01
8/16/2002 18:00	85,043.87	56,300.16
8/16/2002 19:00	81,999.74	54,341.87
8/16/2002 20:00	79,896.07	52,690.17
8/16/2002 21:00	77,507.79	52,387.90
8/16/2002 22:00	73,421.10	51,792.00
8/16/2002 23:00	67,592.71	48,542.58
8/17/2002 0:00	63,691.64	45,617.03
8/17/2002 1:00	59,654.45	44,036.58
8/17/2002 2:00	58,577.87	43,799.09

DATE - TIME	G2-ENTR-MEAN	G3-ENTR-MEAN
8/17/2002 3:00	57,937.49	43,518.41
8/17/2002 4:00	56,780.47	43,527.04
8/17/2002 5:00	57,522.94	43,172.95
8/17/2002 6:00	61,080.62	43,432.04
8/17/2002 7:00	64,845.56	44,537.49
8/17/2002 8:00	70,714.18	45,228.40
8/17/2002 9:00	75,527.87	46,351.12
8/17/2002 10:00	79,385.62	47,633.61
8/17/2002 11:00	81,702.75	48,324.52
8/17/2002 12:00	81,622.32	48,706.67
8/17/2002 13:00	80,793.22	48,279.18
8/17/2002 14:00	81,220.14	47,551.57
8/17/2002 15:00	80,493.14	47,666.00
8/17/2002 16:00	79,967.22	46,469.87
8/17/2002 17:00	78,903.02	45,750.89
8/17/2002 18:00	77,551.10	45,055.67
8/17/2002 19:00	76,718.91	45,105.33
8/17/2002 20:00	74,853.45	44,911.01
8/17/2002 21:00	73,665.50	44,772.83
8/17/2002 22:00	69,736.59	43,760.22
8/17/2002 23:00	64,223.74	41,966.03

COMMONWEALTH ELECTRIC
HOURLY LOAD DATA

October 20 - 26, 2002

DATE - TIME	G2-ENTR-MEAN	G3-ENTR-MEAN
10/20/2002 0:00	45,636.65	33,994.71
10/20/2002 1:00	43,238.54	33,694.62
10/20/2002 2:00	42,077.13	33,496.02
10/20/2002 3:00	41,315.41	33,553.40
10/20/2002 4:00	41,048.95	33,147.38
10/20/2002 5:00	40,785.39	33,237.85
10/20/2002 6:00	41,932.31	32,556.02
10/20/2002 7:00	44,547.65	33,251.09
10/20/2002 8:00	46,772.00	33,030.43
10/20/2002 9:00	48,307.02	32,602.36
10/20/2002 10:00	50,235.94	33,039.26
10/20/2002 11:00	51,881.03	32,948.79
10/20/2002 12:00	53,039.54	32,602.36
10/20/2002 13:00	52,744.12	33,421.00
10/20/2002 14:00	53,265.45	33,718.89
10/20/2002 15:00	53,178.56	33,815.98
10/20/2002 16:00	52,442.91	33,624.01
10/20/2002 17:00	51,889.72	33,683.58
10/20/2002 18:00	51,272.81	33,462.93
10/20/2002 19:00	51,559.54	33,897.62
10/20/2002 20:00	49,743.58	33,855.70
10/20/2002 21:00	47,840.72	34,334.53
10/20/2002 22:00	45,714.85	35,985.06
10/20/2002 23:00	44,394.15	37,710.61
10/21/2002 0:00	42,711.41	39,392.03
10/21/2002 1:00	42,135.05	39,817.90
10/21/2002 2:00	42,132.16	40,576.97
10/21/2002 3:00	41,880.18	40,788.80
10/21/2002 4:00	41,987.34	40,830.73
10/21/2002 5:00	43,525.27	41,684.68
10/21/2002 6:00	47,861.00	43,935.40
10/21/2002 7:00	57,169.63	49,579.85
10/21/2002 8:00	66,938.78	55,888.49
10/21/2002 9:00	72,282.41	57,786.16
10/21/2002 10:00	75,543.62	59,628.66
10/21/2002 11:00	77,122.09	61,605.76
10/21/2002 12:00	76,693.44	61,599.14
10/21/2002 13:00	75,986.75	60,815.80
10/21/2002 14:00	76,522.56	61,349.80
10/21/2002 15:00	74,199.75	59,041.71
10/21/2002 16:00	70,043.59	56,852.77
10/21/2002 17:00	66,049.62	55,480.27

DATE - TIME	G2-ENTR-MEAN	G3-ENTR-MEAN
10/21/2002 18:00	63,474.83	53,801.06
10/21/2002 19:00	63,593.58	53,070.68
10/21/2002 20:00	61,876.09	51,903.39
10/21/2002 21:00	59,776.28	51,788.65
10/21/2002 22:00	56,726.50	50,837.61
10/21/2002 23:00	52,257.55	48,077.17
10/22/2002 0:00	49,062.95	46,486.21
10/22/2002 1:00	46,858.88	47,318.10
10/22/2002 2:00	45,868.36	46,106.68
10/22/2002 3:00	45,205.11	45,985.32
10/22/2002 4:00	45,011.06	45,696.26
10/22/2002 5:00	45,810.43	46,890.02
10/22/2002 6:00	49,891.29	49,070.13
10/22/2002 7:00	59,420.04	54,414.49
10/22/2002 8:00	69,137.05	58,340.01
10/22/2002 9:00	74,425.66	60,425.24
10/22/2002 10:00	77,162.64	62,347.18
10/22/2002 11:00	78,057.59	62,342.76
10/22/2002 12:00	78,170.55	62,611.97
10/22/2002 13:00	77,359.59	62,044.87
10/22/2002 14:00	77,194.50	61,830.84
10/22/2002 15:00	74,842.72	59,847.11
10/22/2002 16:00	70,816.90	58,300.29
10/22/2002 17:00	67,208.13	57,241.13
10/22/2002 18:00	63,906.38	55,506.75
10/22/2002 19:00	63,909.27	54,381.39
10/22/2002 20:00	62,455.34	53,737.07
10/22/2002 21:00	60,639.37	53,399.46
10/22/2002 22:00	57,453.47	52,287.34
10/22/2002 23:00	52,923.69	49,665.91
10/23/2002 0:00	49,184.59	47,832.23
10/23/2002 1:00	47,162.99	47,410.78
10/23/2002 2:00	46,485.26	46,898.85
10/23/2002 3:00	45,593.21	46,962.84
10/23/2002 4:00	45,494.74	46,797.34
10/23/2002 5:00	46,566.36	48,070.55
10/23/2002 6:00	50,438.68	50,261.69
10/23/2002 7:00	59,295.50	54,652.80
10/23/2002 8:00	69,261.59	59,747.82
10/23/2002 9:00	74,353.25	61,283.60
10/23/2002 10:00	77,411.72	63,309.25
10/23/2002 11:00	78,324.05	65,008.32
10/23/2002 12:00	78,573.13	64,306.63
10/23/2002 13:00	77,376.97	63,439.44
10/23/2002 14:00	78,242.95	63,585.07
10/23/2002 15:00	76,030.20	62,594.32
10/23/2002 16:00	71,839.28	59,628.66
10/23/2002 17:00	68,149.42	58,426.07

DATE - TIME	G2-ENTR-MEAN	G3-ENTR-MEAN
10/23/2002 18:00	65,331.35	56,477.65
10/23/2002 19:00	65,221.29	56,431.31
10/23/2002 20:00	63,344.50	55,403.04
10/23/2002 21:00	61,618.32	54,549.09
10/23/2002 22:00	58,626.46	53,317.81
10/23/2002 23:00	54,368.93	51,148.74
10/24/2002 0:00	50,389.45	50,424.98
10/24/2002 1:00	48,127.45	48,754.59
10/24/2002 2:00	47,154.30	47,834.44
10/24/2002 3:00	46,436.03	47,757.21
10/24/2002 4:00	46,082.68	47,527.72
10/24/2002 5:00	47,357.04	48,024.21
10/24/2002 6:00	51,391.56	50,208.73
10/24/2002 7:00	60,349.75	54,966.14
10/24/2002 8:00	70,596.78	59,767.67
10/24/2002 9:00	75,856.42	61,012.19
10/24/2002 10:00	77,721.62	61,892.62
10/24/2002 11:00	78,761.39	63,810.15
10/24/2002 12:00	78,179.23	63,282.77
10/24/2002 13:00	77,159.74	62,292.01
10/24/2002 14:00	77,568.12	62,830.42
10/24/2002 15:00	75,059.94	60,520.12
10/24/2002 16:00	71,364.29	58,187.76
10/24/2002 17:00	66,782.38	56,256.99
10/24/2002 18:00	64,798.43	54,745.48
10/24/2002 19:00	65,064.89	54,635.15
10/24/2002 20:00	63,657.30	52,755.13
10/24/2002 21:00	61,010.10	52,163.77
10/24/2002 22:00	58,073.27	51,470.90
10/24/2002 23:00	53,311.79	49,584.27
10/25/2002 0:00	49,694.34	47,750.59
10/25/2002 1:00	47,582.95	46,497.25
10/25/2002 2:00	46,444.72	45,804.38
10/25/2002 3:00	45,891.53	45,632.26
10/25/2002 4:00	45,662.72	45,005.59
10/25/2002 5:00	46,693.80	44,780.52
10/25/2002 6:00	50,820.99	47,026.83
10/25/2002 7:00	59,715.46	51,742.31
10/25/2002 8:00	68,873.49	56,960.89
10/25/2002 9:00	73,553.88	57,258.78
10/25/2002 10:00	75,891.17	58,668.79
10/25/2002 11:00	77,368.28	59,216.03
10/25/2002 12:00	76,783.23	59,866.97
10/25/2002 13:00	75,688.44	59,838.29
10/25/2002 14:00	75,543.62	59,783.12
10/25/2002 15:00	73,154.19	57,543.43
10/25/2002 16:00	69,186.29	55,544.26
10/25/2002 17:00	65,525.40	52,746.31

DATE - TIME	G2-ENTR-MEAN	G3-ENTR-MEAN
10/25/2002 18:00	63,524.07	51,949.73
10/25/2002 19:00	64,068.57	50,301.41
10/25/2002 20:00	62,930.33	49,630.60
10/25/2002 21:00	60,821.84	49,043.65
10/25/2002 22:00	57,424.51	48,163.22
10/25/2002 23:00	52,758.60	45,497.66
10/26/2002 0:00	48,755.95	43,246.94
10/26/2002 1:00	45,587.42	41,675.85
10/26/2002 2:00	44,495.52	41,583.17
10/26/2002 3:00	43,791.73	41,066.83
10/26/2002 4:00	43,412.31	40,872.65
10/26/2002 5:00	43,858.34	40,994.01
10/26/2002 6:00	45,541.08	42,086.28
10/26/2002 7:00	49,842.05	42,942.43
10/26/2002 8:00	53,914.22	42,686.47
10/26/2002 9:00	56,176.21	44,310.52
10/26/2002 10:00	58,542.47	45,484.42
10/26/2002 11:00	59,521.41	45,910.29
10/26/2002 12:00	58,979.81	45,927.95
10/26/2002 13:00	58,180.43	44,882.02
10/26/2002 14:00	58,316.56	43,286.66
10/26/2002 15:00	57,937.15	42,150.27
10/26/2002 16:00	56,813.39	41,475.05
10/26/2002 17:00	57,239.14	40,634.34
10/26/2002 18:00	57,189.91	40,042.97
10/26/2002 19:00	57,239.14	40,678.47
10/26/2002 20:00	56,509.28	39,939.26
10/26/2002 21:00	55,159.62	40,888.10
10/26/2002 22:00	52,894.73	39,094.14
10/26/2002 23:00	49,120.88	36,179.24

Information Request AG-1-10

Please describe each of the Companies' distribution system capital budgeting process beginning with the load forecasting and system maintenance planning functions. Describe the planning activities and planning horizon for each major category of distribution plant.

Supplemental Response

Please refer to Appendices B and C to the report entitled "2003 NSTAR Transmission and Distribution Operating Study," which are provided as Attachment AG-1-10(a)(Supp) and AG-1-10(b)(Supp), respectively. Please refer to Attachment AG-1-10(c)(Supp), which is a report entitled "NSTAR Electric 2003 Major Transmission and Distribution Improvement Project." Please note that the attachments represent a bulk document and, as such, only two (2) copies of this supplemental attachment are being provided to the Department.

D.T.E. 03-121
Attachment AG-1-10 (a) (Supplemental)

Appendix B

Table of Contents

Mass. Avenue District
Bulk Substation Transformer / DSS Line Outages 4

Framingham District
Bulk Substation Transformer / DSS Line Outages 59

Somerville District
Bulk Substation Transformer / DSS Line Outages 102

Waltham District
Bulk Substation Transformer / DSS Line Outages 156

Walpole District
Bulk Substation Transformer / DSS Line Outages 215

Massachusetts Avenue District

Bulk Substation Transformer Outages

Distribution Supply Line Outages

Thermal Results and Remedial Switching Actions

2003 T&D OPERATING STUDY
MASS. AVENUE DISTRICT

STATION #2 HAWKINS STREET

Transformer #110A: General Electric 75 / 84 MVA 110 kV to 13.8 / 13.8 kV
Transformer #110B: General Electric 75 / 84 MVA 110 kV to 13.8 / 13.8 kV

Overload Ratings:

Transformer	Nameplate	12 hour LTE, 90F Ambient	12 hour LTE, 110F Ambient
110A	75 / 84 MVA	107 MVA	100 MVA
110B	75 / 84 MVA	107 MVA	100 MVA

Station Capabilities:

Total Station Capacity (N)	Station Firm Capacity (LTE)	RADSEC Transfer	Manual Transfer	Total LCC
150 MVA	93 MVA*	0 MVA	0 MVA	93 MVA

* Based upon loss of either 110A/250-517 line or 110B/250-516 line.

Switching Actions:

Loss of Transformer #110A and the 250-517 Line:

Open: OCB's 2 & 3 @ Mystic
Circuit Switcher CS771
110A-1 and 110A-3 13.8kV Secondary Circuit Breakers
Close: The ABR scheme closes the normally open section #1 to tie bus breaker.
OCB's 2 & 3 @ Mystic are manually closed.

Loss of Transformer #110B and the 250-516 Line:

Open: OCB's 9 & 10 @ Mystic
Circuit Switcher CS770
110B-2 and 110B-4 13.8kV Secondary Circuit Breakers
Close: The ABR scheme closes the normally open section #1 to tie bus breaker.
OCB's 9 & 10 @ Mystic are manually closed

The description above assumes circuit switchers CS-772 and CS-776 are open at Chatham St.

Results:

Loading	-	No heavy loading conditions were identified.
Voltage	-	No low voltage conditions were identified.

Additional Actions Required: None

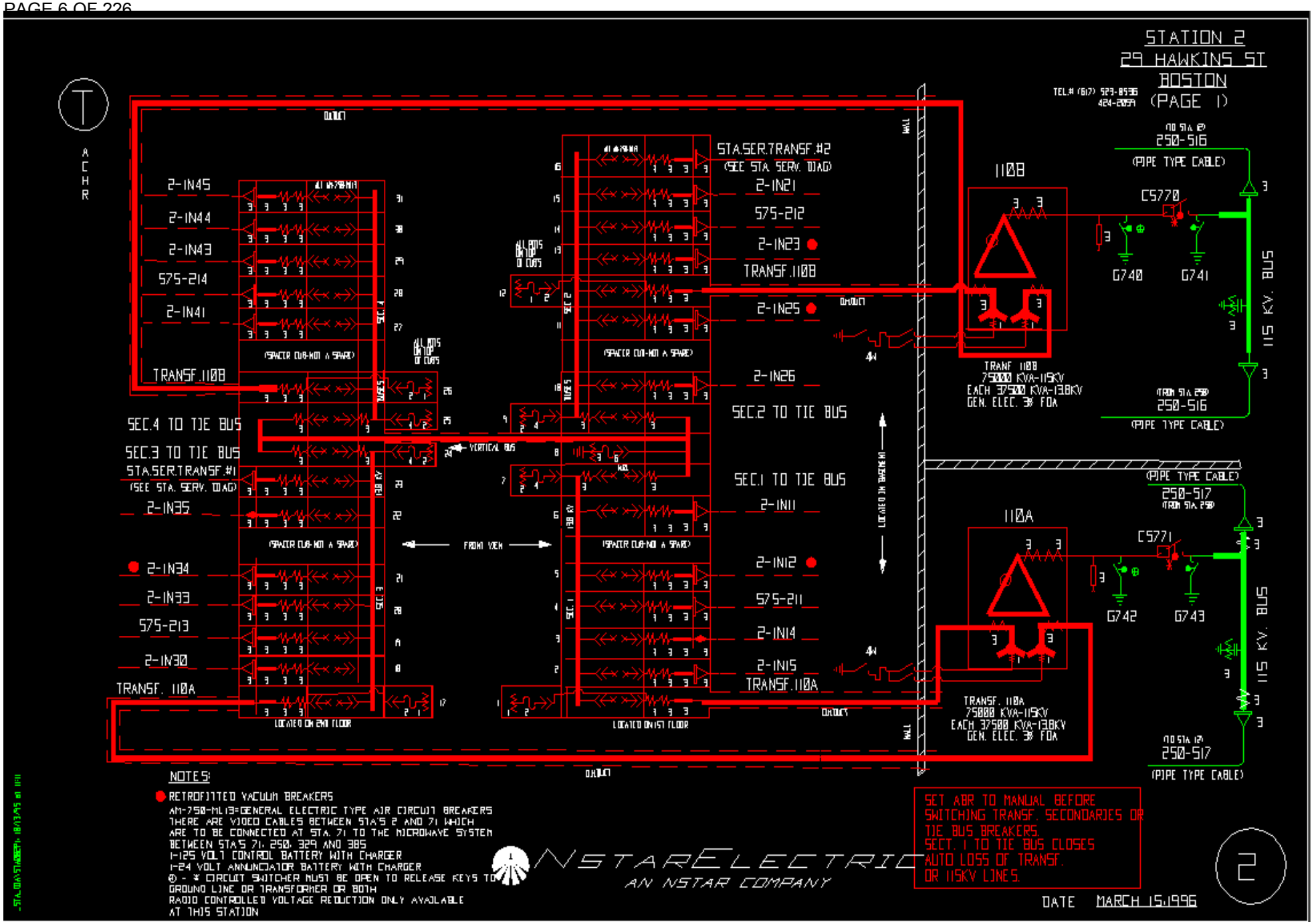
STATION 2
29 HAWKINS ST
BOSTON
(PAGE 1)
TEL.# (617) 523-8536
424-2059
A C H R
2-IN45
2-IN44
2-IN43
575-214
2-IN41
TRANSF.110B
SEC.4 TO TIE BUS
SEC.3 TO TIE BUS
STA.SER.TRANSF.#1
(SEE STA. SERV. DIAG)
2-IN35
2-IN34
2-IN33
575-213
2-IN30
TRANSF. 110A
(SPACER CUB-NOT A SPARE)
VERTICAL BUS
FRONT VIEW
LOCATED ON 2ND FLOOR
LOCATED ON 1ST FLOOR
STA.SER.TRANSF.#2
(SEE STA. SERV. DIAG)
2-IN21
575-212
2-IN23
TRANSF.110B
2-IN25
2-IN26
SEC.2 TO TIE BUS
SEC.1 TO TIE BUS
2-IN11
2-IN12
575-211
2-IN14
2-IN15
TRANSF.110A
LOCATED IN BASEMENT
110B
TRANF. 110B
75000 KVA-115KV
EACH 37500 KVA-138KV
GEN. ELEC. 3% FDA
C5770
G740
G741
115 KV. BUS
(PIPE TYPE CABLE)
250-516
110A
TRANSF. 110A
75000 KVA-115KV
EACH 37500 KVA-138KV
GEN. ELEC. 3% FDA
C5771
G742
G743
250-517
NOTES:
RETROFITTED VACUUM BREAKERS
AM-750-ML13=GENERAL ELECTRIC TYPE AIR CIRCUIT BREAKERS
THERE ARE VIDEO CABLES BETWEEN STA'S 2 AND 71 WHICH
ARE TO BE CONNECTED AT STA. 71 TO THE MICROWAVE SYSTEM
BETWEEN STA'S 71, 250, 329 AND 385
1-125 VOLT CONTROL BATTERY WITH CHARGER
1-24 VOLT ANNUNCIATOR BATTERY WITH CHARGER
⊕ - % CIRCUIT SWITCHER MUST BE OPEN TO RELEASE KEYS TO
GROUND LINE OR TRANSFORMER OR BOTH
RADIO CONTROLLED VOLTAGE REDUCTION ONLY AVAILABLE
AT THIS STATION
NSTAR ELECTRIC
AN NSTAR COMPANY
SET ABR TO MANUAL BEFORE
SWITCHING TRANSF. SECONDARIES OR
TIE BUS BREAKERS.
SECT. 1 TO TIE BUS CLOSES
AUTO LOSS OF TRANSF.
OR 115KV LINES.
DATE MARCH 15,1996
2

2003 T&D OPERATING STUDY
MASS. AVENUE DISTRICT

STATION #4 "L" STREET

Transformer #110A: Westinghouse 75 / 84 MVA 110 kV to 13.8 / 13.8 kV (A)
Transformer #110B: Westinghouse 75 / 84 MVA 110 kV to 13.8 / 13.8 kV
Transformer #110C: Westinghouse 50 / 56 MVA 110 kV to 13.8 / 13.8 kV
Transformer #110D: Westinghouse 50 / 56 MVA 110 kV to 13.8 / 13.8 kV

(A) Bus Section #L6 was destroyed in a fire, Transformer 110A has only one winding in-service

Overload Ratings:

Transformer	Nameplate	12 hour LTE, 90F Ambient	12 hour LTE, 110F Ambient
110A	37 / 42 MVA	50 MVA	44 MVA
110B	75 / 84 MVA	102 MVA	96 MVA
110C	50 / 56 MVA	67 MVA	64 MVA
110D	50 / 56 MVA	67 MVA	64 MVA

Station Capabilities:

Total Station Capacity (N)	Station Firm Capacity (LTE)	RADSEC Transfer	Manual Transfer	Total LCC
212 MVA	140 MVA*	0 MVA	0 MVA	140 MVA

- Based upon loss of 110C and 110D transformers.

Switching Actions:

Loss of Transformer #110A:

Open: Circuit Breakers #5 and #6 at Station 385 K Street
Disconnect Switch #T730 at Station 385 K Street
Both 110A Main 13.8kV Circuit Breakers at Station 4 L Street
Close: Bus Tie Breakers operate normally open, manually close switches.
Circuit Breakers #5 and #6 at Station 385 K Street to close ring bus

Loss of Transformer #110B:

Open: Circuit Breakers #7 and #8 at Station 385 K Street
Disconnect Switch #T731 at Station 385 K Street
Both 110B Main 13.8kV Circuit Breakers
Close: Bus Tie Breakers operate normally open, manually close switches.
Circuit Breakers #7 and #8 at Station 385 K Street to close ring bus

Loss of Transformer #110C:

Open: Circuit Breakers #19 and #20 at Station 385 K Street (de-energizes both 110C and 110D)
Disconnect Switch #T730 at Station 4 L Street
Both Main 13.8kV Circuit Breakers
Close: Bus Tie Breakers operate normally open, manually close switches.
Circuit Breakers #19 and #20 at Station 385 K Street to close ring bus and re-energize 110D

Loss of Transformer #110D:

Open: Circuit Breakers #19 and #20 at Station 385 K Street (de-energizes both 110C and 110D)
Disconnect Switch #T731 at Station 4 L Street
Main 13.8kV Circuit Breakers
Close: Bus Tie Breakers operate normally open, manually close switches.
Circuit Breakers #19 and #20 at Station 385 K Street to close ring bus and re-energize 110C

Results:

Loading - No heavy loading conditions were identified.

Voltage - No low voltage conditions were identified.

Additional Actions Required:

None

STATION 4
L STREET GENERATING
SOUTH BOSTON
13.8KV AND BUSES
Page 1

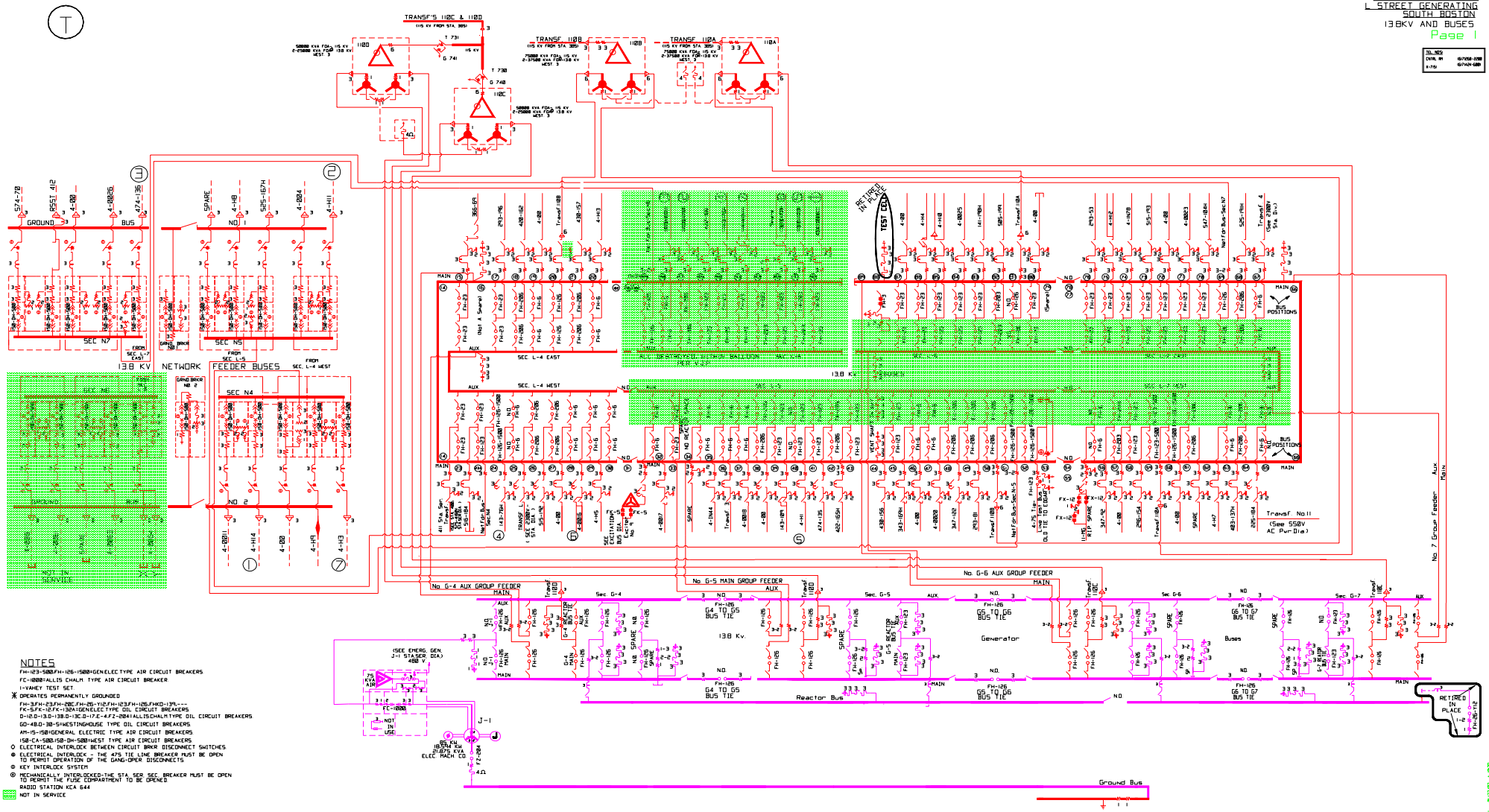

NOTES

FH-123-500,FH-126-1500=GEN.ELEC.TYPE AIR CIRCUIT BREAKERS
FC-1000=ALLIS CHALM. TYPE AIR CIRCUIT BREAKER
I-VAHEY TEST SET
✳ OPERATES PERMANENTLY GROUNDED
FH-3,FH-23,FH-28C,FH-26-Y12,FH-123,FH-126,FHKO-139,----
FK-5,FK-12,FK-13DA=GEN.ELEC.TYPE OIL CIRCUIT BREAKERS
D-10,D-13,D-13B,D-13C,D-17,E-4,F2-2B4=ALLIS CHALM.TYPE OIL CIRCUIT BREAKERS
GO-48,O-38-5=WESTINGHOUSE TYPE OIL CIRCUIT BREAKERS
AM-15-150=GENERAL ELECTRIC TYPE AIR CIRCUIT BREAKERS
150-CA-500,150-DH-500=WEST TYPE AIR CIRCUIT BREAKERS
◇ ELECTRICAL INTERLOCK BETWEEN CIRCUIT BRKR DISCONNECT SWITCHES
⊕ ELECTRICAL INTERLOCK - THE 475 TIE LINE BREAKER MUST BE OPEN TO PERMIT OPERATION OF THE GANG-OPER DISCONNECTS
⊙ KEY INTERLOCK SYSTEM
⊙ MECHANICALLY INTERLOCKED-THE STA. SER SEC. BREAKER MUST BE OPEN TO PERMIT THE FUSE COMPARTMENT TO BE OPENED
RADIO STATION KCA 644
NOT IN SERVICE

DATE	DESCRIPTION	BY	CHK
5/14/02	CHANGE LINE 547-1044 TO 547-104H.	EBA	RBB
1/23/02	CHANGED LINE 269-154 TO 296-154 ON BUS SEC. L-7 WEST	EBA	RBB
1/14/02	CHANGED LINE 4-001 TO 4-H14 ON N BUS, SECT 4	WJB	RBB
10/24/01	REVISED DWG FROM ENGINEER'S MARK-UP	EBA	RBB
5/12/97	REMOVED FREQUENCY CHANGER	WJB	RBB

NSTAR ELECTRIC
AN NSTAR COMPANY

4

2003 T&D OPERATING STUDY
MASS. AVENUE DISTRICT

STATION #12 CHATHAM STREET

Transformer #110A: McGraw-Edison 37.5 / 50 / 62.5 MVA 115 kV to 14.4 kV
Transformer #110B: McGraw-Edison 37.5 / 50 / 62.5 MVA 115 kV to 14.4 kV
Transformer #110C: McGraw-Edison 37.5 / 50 / 62.5 MVA 115 kV to 14.4 kV
Transformer #110D: McGraw-Edison 37.5 / 50 / 62.5 MVA 115 kV to 14.4 kV

Overload Ratings:

Transformer	Nameplate	12 hour LTE, 90F Ambient	12 hour LTE, 110F Ambient
110A	37.5/50/62.5 MVA	77 MVA	72 MVA
110B	37.5/50/62.5 MVA	77 MVA	72 MVA
110C	37.5/50/62.5 MVA	77 MVA	72 MVA
110D	37.5/50/62.5 MVA	77 MVA	72 MVA

Station Capabilities:

Total Station Capacity (N)	Station Firm Capacity (LTE)	RADSEC Transfer	Manual Transfer	Total LCC
150 MVA	133 MVA*	0 MVA	0 MVA	133 MVA

*Based upon loss of 110A, 110B and 250-516 line or 110C, 110D and 250-517 line.

Switching Actions:

Loss of Transformer #110A, 110B and 250-516 Line

Open: OCB's 14 & 15 @ K Street
Circuit Switcher CS770 and CS773
Main 110A and 110B 13.8kV Secondary Circuit Breakers
Close: Nothing, bus ties operated closed
Manually close OCB's 14 & 15 @ K Street
Manually close CS773 and 110B 13.8 KV Secondary Breakers

Loss of Transformer #110B, 110A and 250-516 Line

Open: OCB's 14 & 15 @ K Street
Circuit Switcher CS773 and CS770
Main 110B and 110B 13.8kV Secondary Circuit Breaker
Close: Nothing, bus ties operated closed
Manually close OCB's 14 & 15 @ K Street
Manually close CS770 and 110A 13.8 KV Secondary Breakers

Loss of Transformer #110C, 110D and 250-517 Line

Open: OCB's 16 & 17 @ K Street
Circuit Switcher CS774 and CS777
Main 110C and 110D 13.8kV Secondary Circuit Breakers
Close: Nothing, bus ties operated closed
Manually close OCB's 16 & 17 @ K Street
Manually close CS777 and 110D 13.8 KV Secondary Breakers

Loss of Transformer #110D, 110C and 250-517 Line

Open: OCB's 16 & 17 @ K Street
Circuit Switcher CS777 and CS774
Main 110D and 110C 13.8kV Secondary Circuit Breaker
Close: Nothing, bus ties operated closed
Manually close OCB's 16 & 17 @ K Street
Manually close CS774 and 110C 13.8 KV Secondary Breakers

The descriptions above assume CS772 and CS776 are open at Chatham St.

Results:

Loading - No heavy loading conditions were identified.

Voltage - No low voltage conditions were identified.

Additional Actions Required:

None

A
C
R
M-COLOR

COLOR KEY	
COLOR	DESCRIPTION
	DISTRIBUTION/RETAIL
	POWER SUPPLY TRANSMISSION

"T"

STATION 12
CHATHAM STREET
BOSTON
PAGE 1 OF 3
115KV, 13.8KV
EXT.# 3528

NOTES:
VB=G.E.POWER/VAC VB 13.8-1000-3, 3000A, 13.8 KV VACUUM BREAKERS
VBI=G.E.POWER/VAC VBI 13.8-1000-2, 1200A, 13.8 KV VACUUM BREAKERS
SCADA & CURRIER SMITH
HVDC AND FAULT LOCATING EQUIPMENT LOCATED ON 3RD FLOOR
1-130V CONTROL BATTERY WITH CHARGER
1-48V SUPERVISORY CONTROL EQUIPMENT BATTERY WITH CHARGER
FLOOR BUSHINGS BETWEEN 1ST & 2ND FLOORS
NEUTRAL RESISTORS LOCATED IN BASEMENT
* FEEDERS LIVE CAPPED IN M.H. 26020 ON CHATHAM ST.
EMERGENCY SUPPLY FOR HVAC & FIRE PROTECTION SYSTEM FROM STA. 195
◪ NOT YET IN SERVICE
◒ CIRCUIT SWITCHERS EQUIPPED WITH SHUNT TRIP DEVICE
* * TRANSF. NEUTRAL RESISTOR CAN BE BYPASSED ON SITE

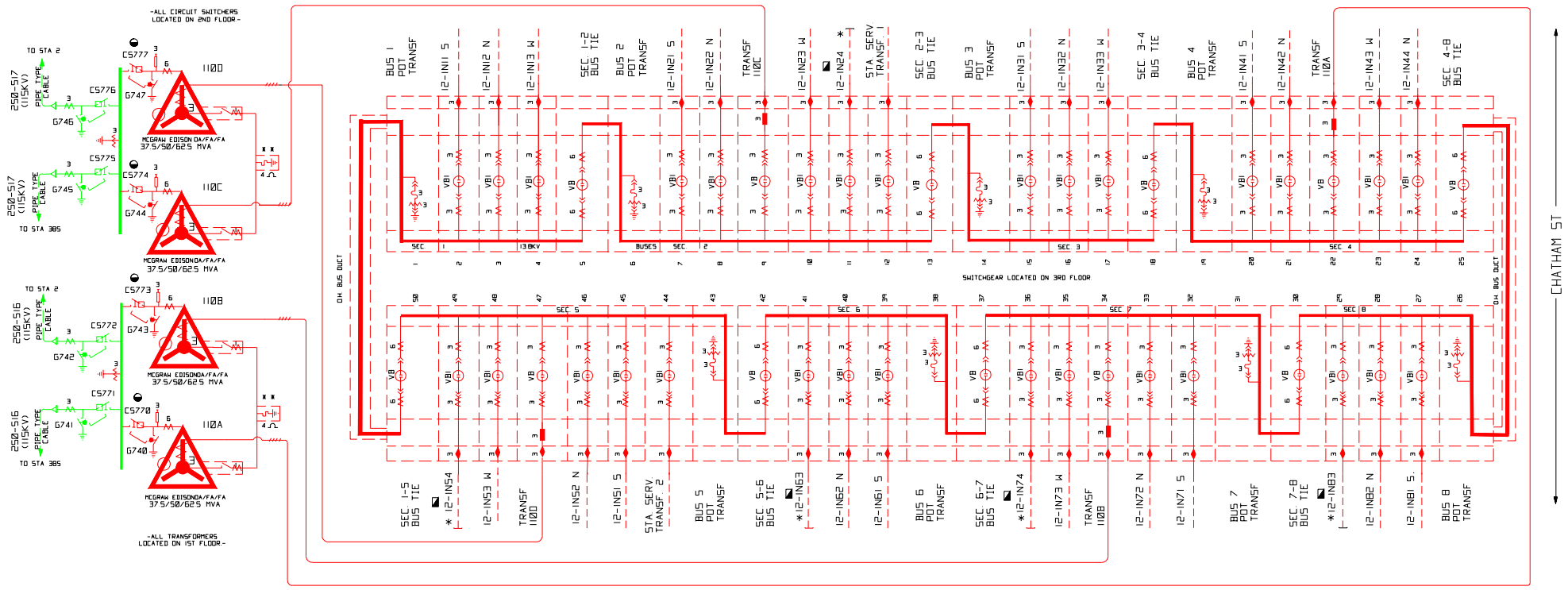

BOSTON EDISON COMPANY
DELIVERY ENGINEERING DEPARTMENT
ELECTRICAL DESIGN DRAFTING GROUP

DWG. STA012

DRAWN BY VCS
REVIEWED BY HCK

DATE FEB. 15,1996

12

2003 T&D OPERATING STUDY
MASS. AVENUE DISTRICT

STATION #53 HIGH STREET

Transformer #110A: General Electric 37.5 / 50 / 62.5 MVA 117 kV to 14.4 kV
Transformer #110B: General Electric 37.5 / 50 / 62.5 MVA 117 kV to 14.4 kV
Transformer #110C: General Electric 37.5 / 50 / 62.5 MVA 117 kV to 14.4 kV
Transformer #110D: General Electric 37.5 / 50 / 62.5 MVA 117 kV to 14.4 kV

Overload Ratings:

Transformer	Nameplate	12 hour LTE, 90F Ambient	12 hour LTE, 110F Ambient
110A	37.5/50/62.5 MVA	80 MVA	75 MVA
110B	37.5/50/62.5 MVA	80 MVA	75 MVA
110C	37.5/50/62.5 MVA	80 MVA	75 MVA
110D	37.5/50/62.5 MVA	80 MVA	75 MVA

Station Capabilities:

Total Station Capacity (N)	Station Firm Capacity (LTE)	RADSEC Transfer	Manual Transfer	Total LCC
150 MVA	139 MVA*	0 MVA	0 MVA	139 MVA

* Based upon loss of 110A, 110B and 385-510 line or 110C, 110D and 385-511 line.

Switching Actions:

Loss of Transformer #110A also isolates the 385-510 Line, 110B and the 110A @ Kingston St

Open: OCB's 10 & 11 @ K Street
OCB's 8 & 9 @ Kingston St
Circuit Switcher CS771 (110A) @ Kingston St
Circuit Switcher CS770 and CS773
Main 110A and 110B 13.8kV Secondary Circuit Breakers

Close: Nothing, bus ties operated closed
Manually close OCB's 10 & 11 @ K Street
Manually close OCB's 8 & 9 @ Kingston St
Manually close CS771 and restore transformer 110A @ Kingston St
Manually close CS773 and restore transformer 110B @ High St

Loss of Transformer #110B also isolates the 385-510 Line, 110A and the 110A @ Kingston St

Open: OCB's 10 & 11 @ K Street
OCB's 8 & 9 @ Kingston St
Circuit Switcher CS771 (110A) @ Kingston St
Circuit Switcher CS773 and CS771
Main 110B and 110A 13.8kV Secondary Circuit Breaker
Close: Nothing, bus ties operated closed
Manually close OCB's 10 & 11 @ K Street
Manually close OCB's 8 & 9 @ Kingston St
Manually close CS771 and restore transformer 110A @ Kingston St
Manually close CS771 and restore transformer 110A @ High St

Loss of Transformer #110C also isolates the 385-511 Line, 110D and the 110B @ Kingston St

Open: OCB's 17 & 18 @ K Street
OCB's 6, 10 & 11 @ Kingston St
Circuit Switcher CS770 (110B) @ Kingston St
Circuit Switcher CS774 and CS777
Main 110C and 110D 13.8kV Secondary Circuit Breaker
Close: Nothing, bus ties operated closed
Manually close OCB's 17 & 18 @ K Street
Manually close OCB's 6, 10 & 11 @ Kingston St
Manually close CS770 and restore transformer 110B @ Kingston St
Manually close CS777 and restore transformer 110D @ High St

Loss of Transformer #110D also isolates the 385-511 Line, 110C and the 110B @ Kingston St

Open: OCB's 17 & 18 @ K Street
OCB's 6, 10 & 11 @ Kingston St
Circuit Switcher CS770 (110B) @ Kingston St
Circuit Switcher CS777 and CS774
Main 110D and 110C 13.8kV Secondary Circuit Breaker
Close: Nothing, bus ties operated closed
Manually close OCB's 17 & 18 @ K Street
Manually close OCB's 6, 10 & 11 @ Kingston St
Manually close CS770 and restore transformer 110B @ Kingston St
Manually close CS774 and restore transformer 110C @ High St

Results:

Loading	-	No heavy loading conditions were identified.
Voltage	-	No low voltage conditions were identified.

Additional Actions Required:

None

NOTES: VB=G.E.POWER/VAC VB 138-1000-3, 3000A, 138 KV VACUUM BREAKERS (#6,10,14,20,24,27,33,37,40,46,51,54)
VBI=G.E.POWER/VAC VBI 138-1000-2, 1200A, 138 KV VACUUM BREAKERS (#2,3,4,5,8,9,11,12,13,16,17,18,19,22,23,25,26,29,30,31,32,35,36,38,39,42,43,44,45,48,49,50,52,53,)
VB2=ABB15VHK1000,1000A,138KV VACUUM BREAKERS (ONE IN EACH CAPACITOR BANK)
SCADA & SAS
VDC AND FAULT LOCATING EQUIPMENT LOCATED ON 3RD FLOOR
1-130V CONTROL BATTERY WITH CHARGER
WALL BUSHINGS BETWEEN TRANSFORMER ROOMS AND HIGH VOLTAGE ROOMS
NEUTRAL RESISTORS LOCATED IN BASEMENT

◒ CIRCUIT SWITCHERS EQUIPPED WITH SHUNT TRIP DEVICE

* * TRANSF. NEUTRAL RESISTOR CAN BE BYPASSED ON SITE

⊖ KEY INTERLOCKED TO PREVENT GROUND BLADES FROM BEING CLOSED WHILE CIRCUIT SWITCHER IS CLOSED.

⊕ INTERLOCKED TO PREVENT ENTERING CUBICLE UNLESS BREAKER OPEN AND RACKED TO DISCONNECT POSITION. STATION SERVICE DIAGRAM SEE PAGE 2.

◪ NOT YET IN SERVICE

STATION 53
75 HIGH STREET
BOSTON
PAGE-1

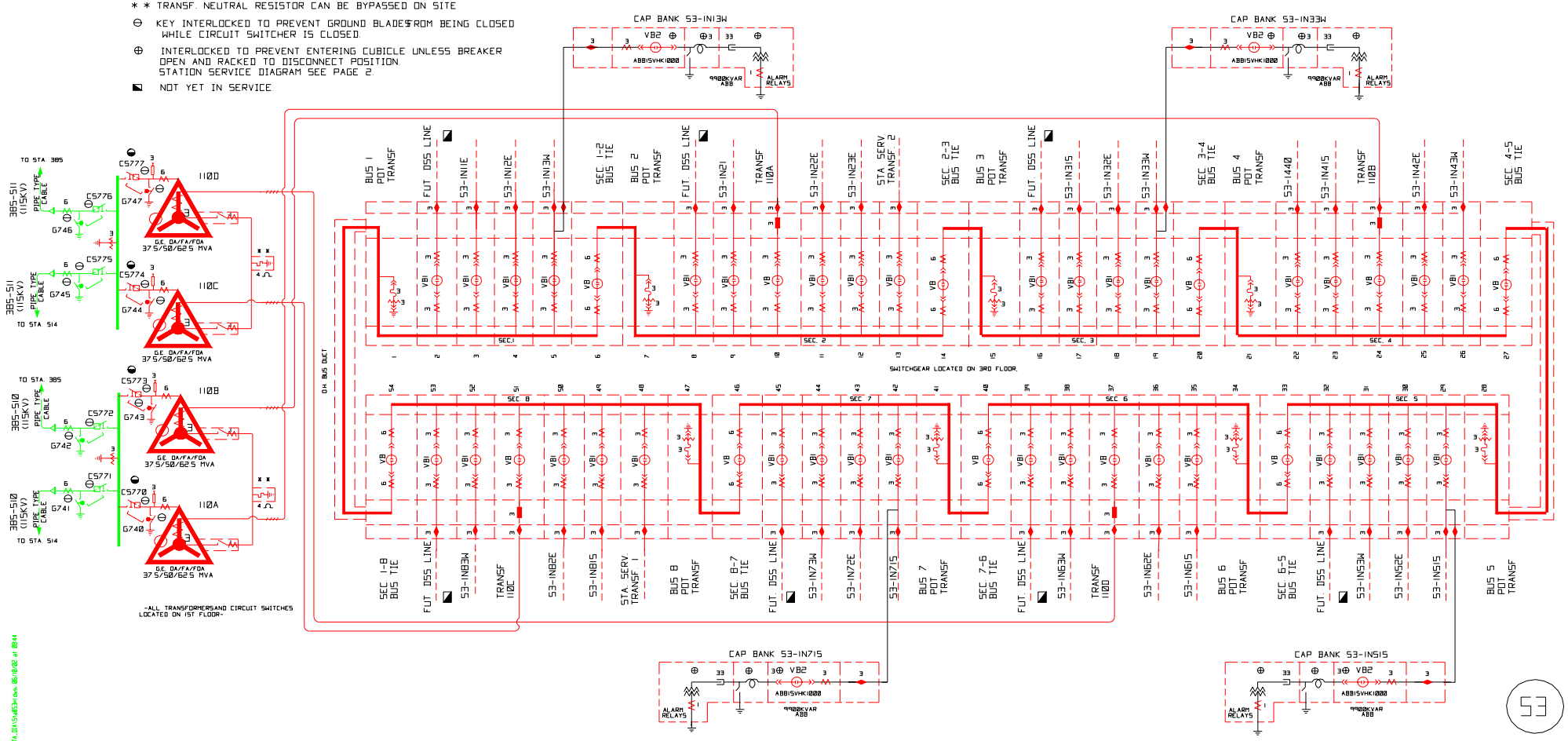

NSTAR ELECTRIC
AN NSTAR COMPANY

DATE	DESCRIPTION	BY	CHCK
4/9/97	REMOVED "NOT IN SERVICE" SYMBOLS	WJB	

DWG.STA053

2003 T&D OPERATING STUDY
MASS. AVENUE DISTRICT

STATION #71 CARVER STREET

Transformer #110A: Westinghouse 75 / 84 MVA 110 kV to 13.8/13.8 kV
Transformer #110B: Westinghouse 75 / 84 MVA 110 kV to 13.8/13.8 kV

Overload Ratings:

Transformer	Nameplate	12 hour LTE, 90F Ambient	12 hour LTE, 110F Ambient
110A	75 / 84 MVA	100 MVA	94 MVA
110B	75 / 84 MVA	100 MVA	94 MVA

Station Capabilities:

Total Station Capacity (N)	Station Firm Capacity (LTE)	RADSEC Transfer	Manual Transfer	Total LCC
150 MVA	87 MVA*	0 MVA	0 MVA	87 MVA

*Based upon loss of either 110A/329-512 or 110B/329-513.

Switching Actions:

Loss of Transformer #110A also isolates the 329-512 Line and 110A @ Scotia St

Open: OCB's 1 & 2 @ Kingston St
OCB's 3 & 6 @ Brighton
Circuit Switcher CS771 @ Scotia St
Circuit Switcher CS771
Both 110A 13.8kV Secondary Circuit Breakers
Close: The ABR scheme closes the normally open section #1 tie breaker.
Manually close OCB's 1 & 2 @ Kingston St
Manually close OCB's 3 & 6 @ Brighton
Manually close CS771 and restore 110A @ Scotia St

Loss of Transformer #110B also isolates the 329-513 Line and 110B @ Scotia St

Open: OCB's 4 & 5 @ Kingston St
OCB's 9 & 12 @ Brighton
Circuit Switcher CS770 @ Scotia St
Circuit Switcher CS770
Both 110B 13.8kV Secondary Circuit Breakers
Close: The ABR scheme closes the normally open section #1 tie breaker.
Manually close OCB's 4 & 5 @ Kingston St
Manually close OCB's 9 & 12 @ Brighton

Manually close CS770 and restore 110B @ Scotia St

Results:

Loading	-	No heavy loading conditions were identified
Voltage	-	No low voltage conditions were identified.

Additional Actions Required: None

STATION 71
70-74 CHARLES ST.
BOSTON
PAGE 1

TEL.# (617) 424-2067/3290

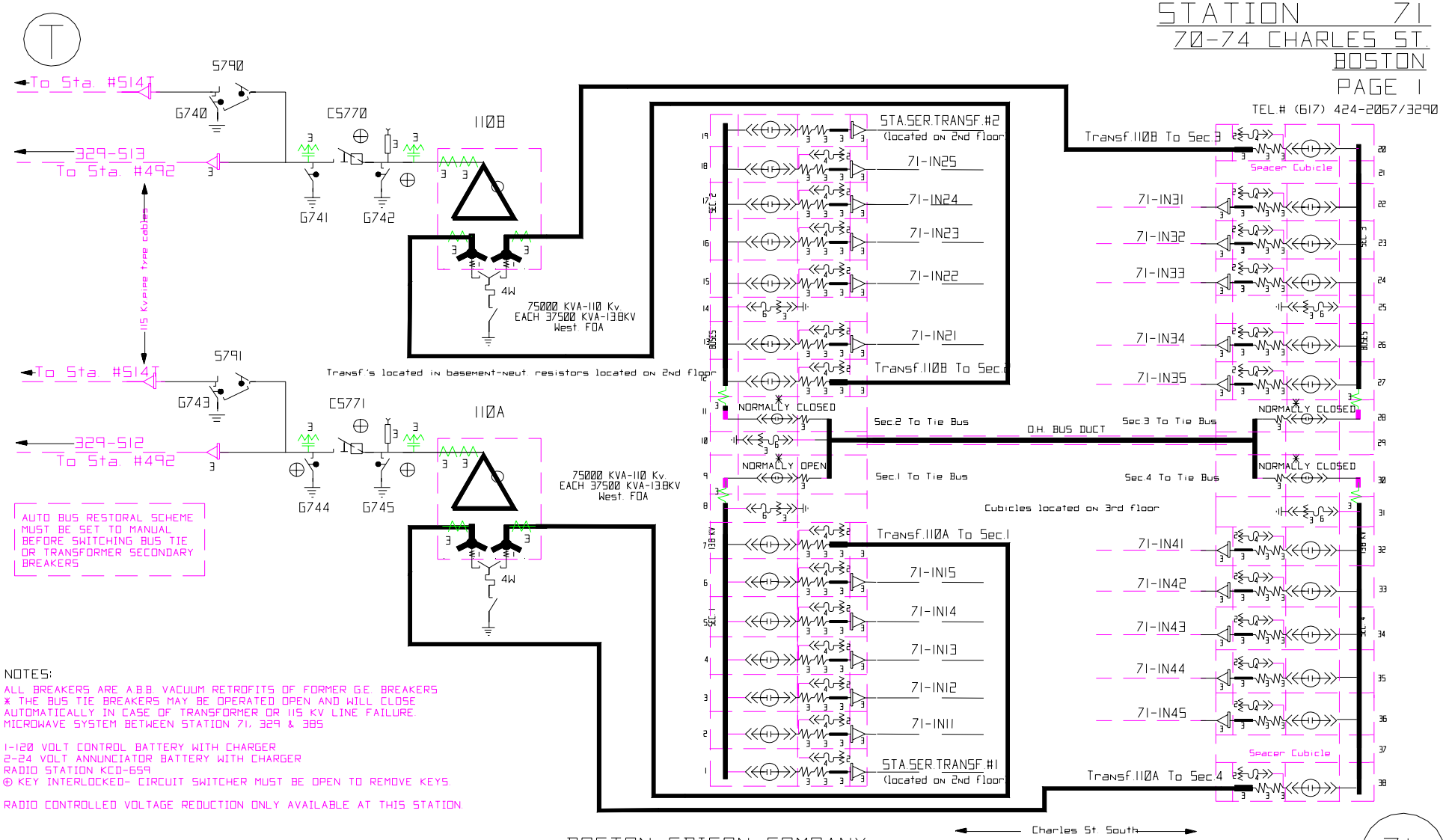

NOTES:

ALL BREAKERS ARE A.B.B. VACUUM RETROFITS OF FORMER G.E. BREAKERS
* THE BUS TIE BREAKERS MAY BE OPERATED OPEN AND WILL CLOSE AUTOMATICALLY IN CASE OF TRANSFORMER OR 115 KV LINE FAILURE.
MICROWAVE SYSTEM BETWEEN STATION 71, 329 & 385

1-120 VOLT CONTROL BATTERY WITH CHARGER
2-24 VOLT ANNUNCIATOR BATTERY WITH CHARGER
RADIO STATION KCD-659
⊕ KEY INTERLOCKED- CIRCUIT SWITCHER MUST BE OPEN TO REMOVE KEYS.

RADIO CONTROLLED VOLTAGE REDUCTION ONLY AVAILABLE AT THIS STATION.

DRAWN BY VCS
CHECKED BY

DWG.#STA071P1

BOSTON EDISON COMPANY
DELIVERY ENGINEERING DEPARTMENT
ELECTRICAL DESIGN DRAFTING GROUP

DATE FEB. 6,1996

71

2003 T&D OPERATING STUDY
MASS. AVENUE DISTRICT

STATION #106 ANDREW SQUARE

Transformer #110A: Cooper Power Systems 24 / 32 / 40 MVA 117 kV to 14.4 kV
Transformer #110B: Cooper Power Systems 24 / 32 / 40 MVA 117 kV to 14.4 kV
Transformer #110C: Cooper Power Systems 24 / 32 / 40 MVA 117 kV to 14.4 kV
Transformer #110D: Cooper Power Systems 24 / 32 / 40 MVA 117 kV to 14.4 kV

Overload Ratings:

Transformer	Nameplate	12 hour LTE, 90F Ambient	12 hour LTE, 110F Ambient
110A	24/32/40 MVA	40 MVA*	40 MVA*
110B	24/32/40 MVA	40 MVA*	40 MVA*
110C	24/32/40 MVA	40 MVA*	40 MVA*
110D	24/32/40 MVA	40 MVA*	40 MVA*

*Andrew Square units derated to top nameplate rating due to tap changer restrictions

Station Capabilities:

Total Station Capacity (N)	Station Firm Capacity (LTE)	RADSEC Transfer	Manual Transfer	Total LCC
160 MVA	120 MVA*	0 MVA	0 MVA	120 MVA

*Based upon loss of one transformer and activation of the 115 KV restoral scheme.

Switching Actions:

Loss of Transformer #110A:

Open: OCB #1 (OCB #2 is normally open)
Circuit Switcher CS770
Main 110A 13.8kV Secondary Circuit Breaker
Close: ABR scheme closes 13.8 KV bus ties
Manually close OCB #1

Loss of Transformer #110B:

Open: OCB #3 (OCB #2 is normally open)
Circuit Switcher CS771
Main 110B 13.8kV Secondary Circuit Breaker
Close: ABR scheme closes 13.8 KV bus ties
Manually close OCB #3

Loss of Transformer #110C, 483-525 Line and 110B @ Dewar St

Open: OCB's 4 & 7 @ K Street
CS770 @ Dewar St (110B transformer)
OCB #1
Circuit Switcher CS772
Main 110C 13.8kV Secondary Circuit Breaker
Close: ABR scheme closes 13.8 KV bus ties
115 KV ABR scheme closes OCB #2
ABR scheme closes 13.8 KV bus ties @ Dewar St.
Manually close OCB's 4 & 7 @ K Street.
Manually close CS770 and restore 110B @ Dewar St

Loss of Transformer #110D, 483-524 Line and 110A @ Dewar St

Open: OCB's 13 & 14 @ K Street
CS771 @ Dewar St (110A transformer)
OCB #3
Circuit Switcher CS774
Main 110D 13.8kV Secondary Circuit Breaker
Close: ABR scheme closes 13.8 KV bus ties
115 KV ABR scheme closes OCB #2
ABR scheme closes 13.8 KV bus ties @ Dewar St
Manually close OCB's 13 & 14 @ K Street
Manually close CS771 and restore 110A @ Dewar St

Results:

Total firm transformation of 120 MVA exceeded by 27%, with approximately 32.0 MW of load at risk of load shed for loss of a transformer. No transfer capability with any other station from Station 106 Andrew Square.

Loading - For loss of any transformer, remaining in-service transformers each loaded 27% beyond 40 MVA top nameplate.

Voltage - None

Additional Actions Required:

Remedial Project: Install distribution infrastructure including RADSEC controlled switches to support load transfers from Station #106 Andrew Square to Station #4 L Street. At Station #106 Andrew Square install an on-site spare transformer (110E) that can be manually switched into service should any of Station #106 transformers were to experience a failure.

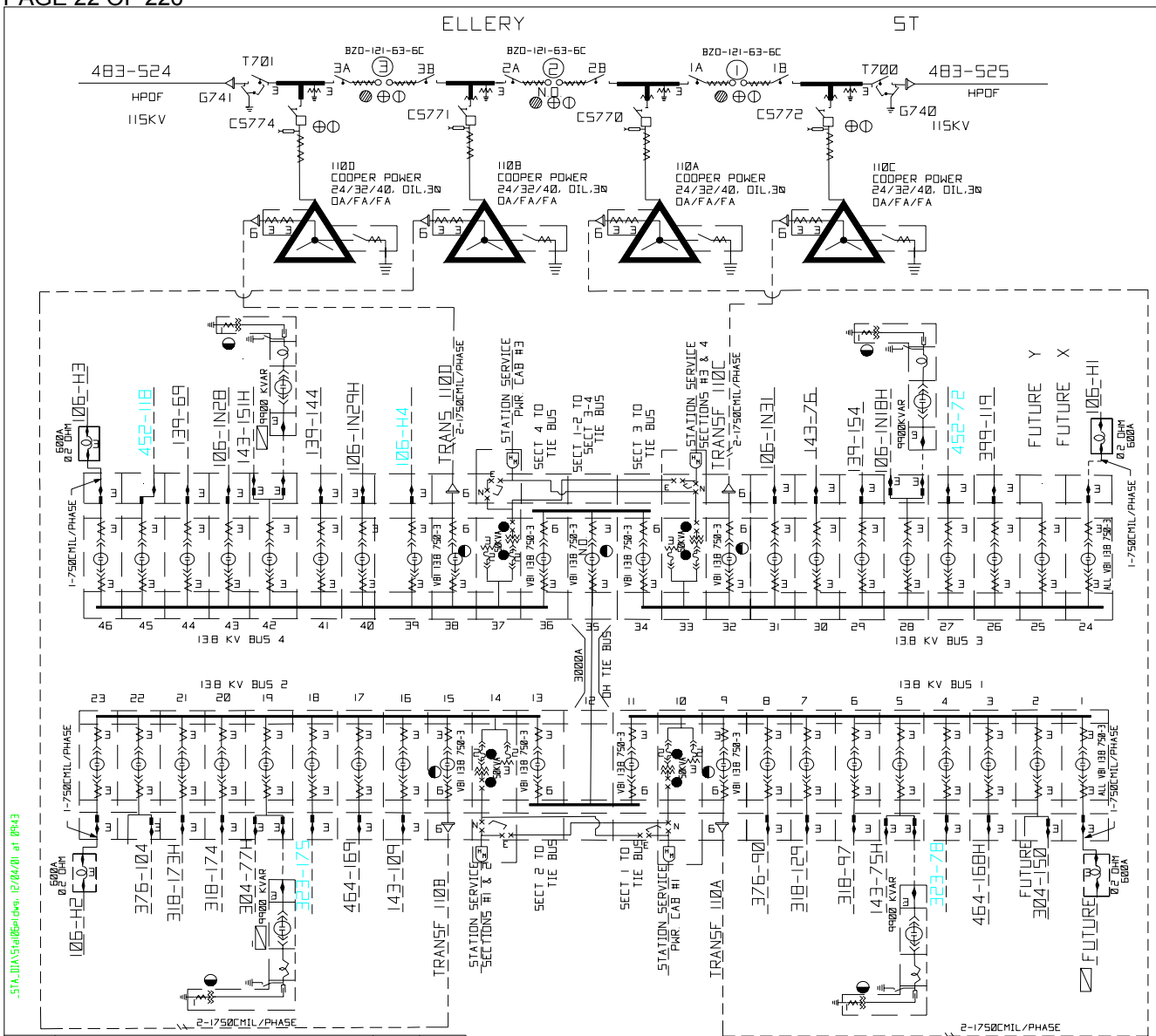

STATION 106
ANDREW SQUARE
SOUTH BOSTON
PAGE 1 OF 2

TEL # (617) 268-5607

KEY INTERLOCK: SECONDARY BREAKER MUST BE OPEN TO ACCESS FUSES.

ELECTRICALLY INTERLOCKED TO PREVENT OPERATION OF OCB UNLESS BOTH ISOLATING DISCONNECTS ARE IN THE SAME POSITION.

INTERLOCKED TO PREVENT ENTERING CUBICLE UNLESS BREAKER OPEN AND RACKED TO DISCONNECT POSITION

NOT IN SERVICE

ELECTRICALLY INTERLOCKED TO PREVENT CLOSING THE 2-115KV SUPPLY LINES TOGETHER. TO CLOSE OCB #2-OCB #1 OR OCB #3 MUST BE OPENED.

115KV AUTO BUS TIE CLOSING SCHEME- OCB#2 CLOSES AUTOMATICALLY UPON OCB#1 TRIPPING WHILE CS770 IS CLOSED OR OCB#3 TRIPPING WHILE CS771 IS CLOSED.

14KV AUTOMATIC BUS RESTORAL SCHEME UPON LOSS OF ANY TRANSFORMER SECONDARY BREAKER THE SECTION 1-2 TO SECTION 3-4 BUS TIE WILL CLOSE AUTOMATICALLY.

STATION IS EQUIPPED WITH SELECTIVE LOAD SHEDDING VIA SCADA AND BULK LOAD SHEDDING VIA UNDER FREQUENCY RELAY WHICH TRIPS CUBICLES 1, 23, 24, 46

STATION EQUIPPED WITH SUBSTATION INTEGRATION SYSTEM

2-130V CONTROL BATTERY & CHARGER

VBI-138-750-3 GE 3000AMP VACUUM BREAKERS (#9,11,13,15,31,34,35,36,38,).

VBI-138-750-3 GE 1200AMP VACUUM BREAKERS (ALL 138 EXCEPT ABOVE)

BZO-121-63-6C SIEMANS OIL CIRCUIT BREAKERS

106

NSTAR ELECTRIC
AN NSTAR COMPANY

DATE	DESCRIPTION	BY	CHCK
7/26/02	CORRECTED 115KV AUTOBUS SCHEME NOTE	WJB	RNA
11/29/01	LINE NUMBERS UPDATED	EBA	

.STA_DIA\Sta106.dwg, 12/04/01 at 09:43

2003 T&D OPERATING STUDY
MASS. AVENUE DISTRICT

STATION #110 BAKER STREET

Transformer #110A: Westinghouse 75 MVA 110 / 66 / 24.4 kV
Transformer #110B: Westinghouse 75 MVA 110 / 66 / 24.4 kV

Overload Ratings:

Transformer	Nameplate	12 hour LTE, 90F Ambient	12 hour LTE, 110F Ambient
110A	75 MVA	113 MVA	106 MVA
110B	75 MVA	103 MVA	96 MVA

Station Capabilities:

Total Station Capacity (N)	Station Firm Capacity (LTE)	RADSEC Transfer	Manual Transfer	Total LCC
150 MVA	89 MVA	15 MVA	0 MVA	104 MVA

Switching Actions:

Loss of Transformer #110A:

Open: Circuit Breakers #8 and #9
Main 24kV Circuit Breaker #6
Disconnect Switch #T730
Close: Nothing on 24kV side, bus ties normally operated closed.
Circuit Breakers #8 and #9 to close 115kV ring.

Loss of Transformer #110B:

Open: Circuit Breakers #11 and #12
Main 24kV Circuit Breaker #9
Disconnect Switch #T731
Close: Nothing on 24kV side, bus ties normally operated closed.
Circuit Breakers #11 and #12 to close 115kV ring.

Results:

Loading	-	No heavy loading conditions were identified.
Voltage	-	No low voltage conditions were identified.

Additional Actions Required:

None.

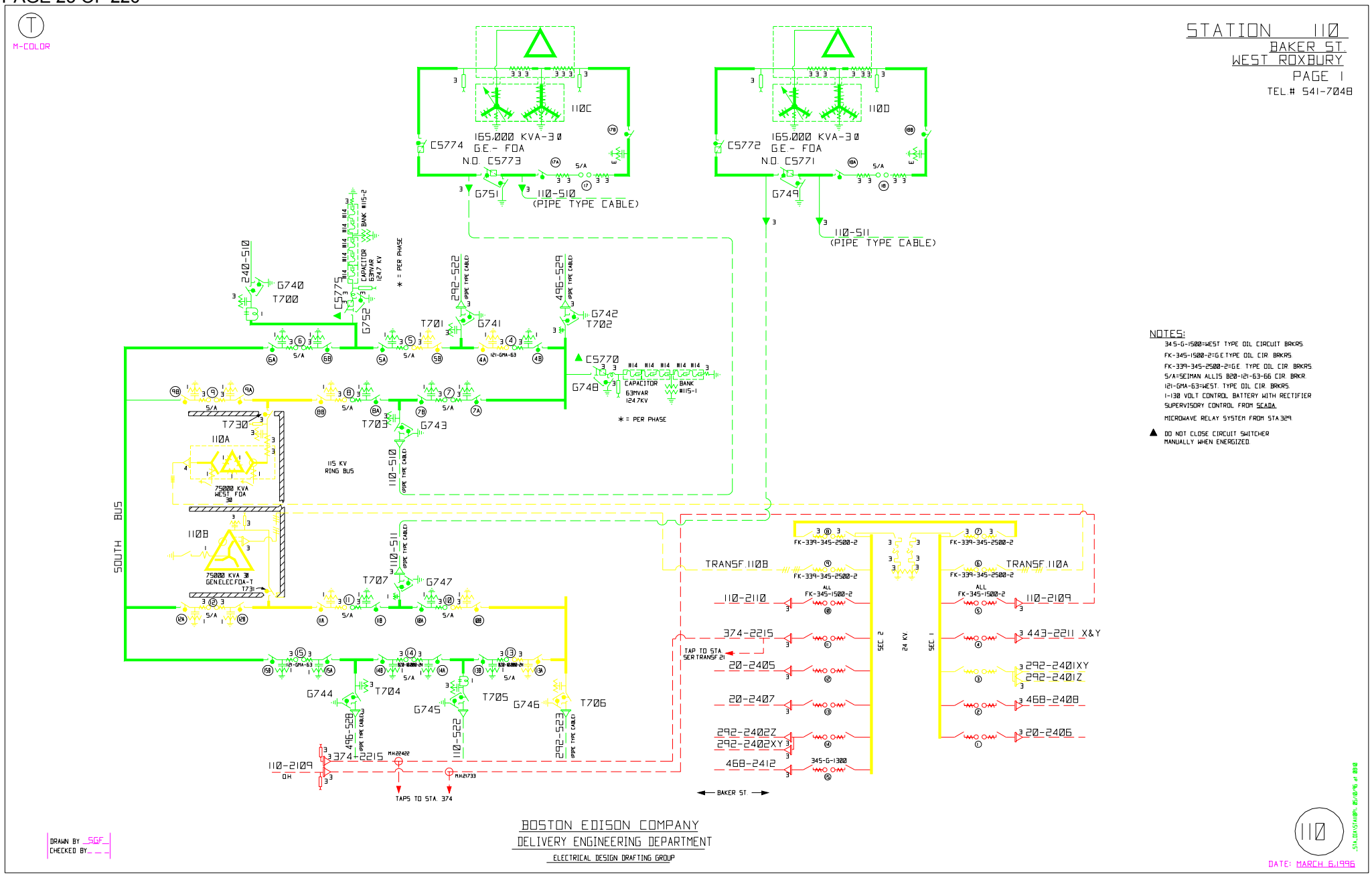

NOTES:

345-G-1500=WEST TYPE OIL CIRCUIT BRKRS.
FK-345-1500-2=G.E.TYPE OIL CIR. BRKRS.
FK-339-345-2500-2=G.E. TYPE OIL CIR. BRKRS.
S/A=SEIMAN ALLIS B20-121-63-66 CIR. BRKR.
121-GMA-63=WEST. TYPE OIL CIR. BRKRS.
1-130 VOLT CONTROL BATTERY WITH RECTIFIER
SUPERVISORY CONTROL FROM SCADA.
MICROWAVE RELAY SYSTEM FROM STA 329.

▲ DO NOT CLOSE CIRCUIT SWITCHER MANUALLY WHEN ENERGIZED.

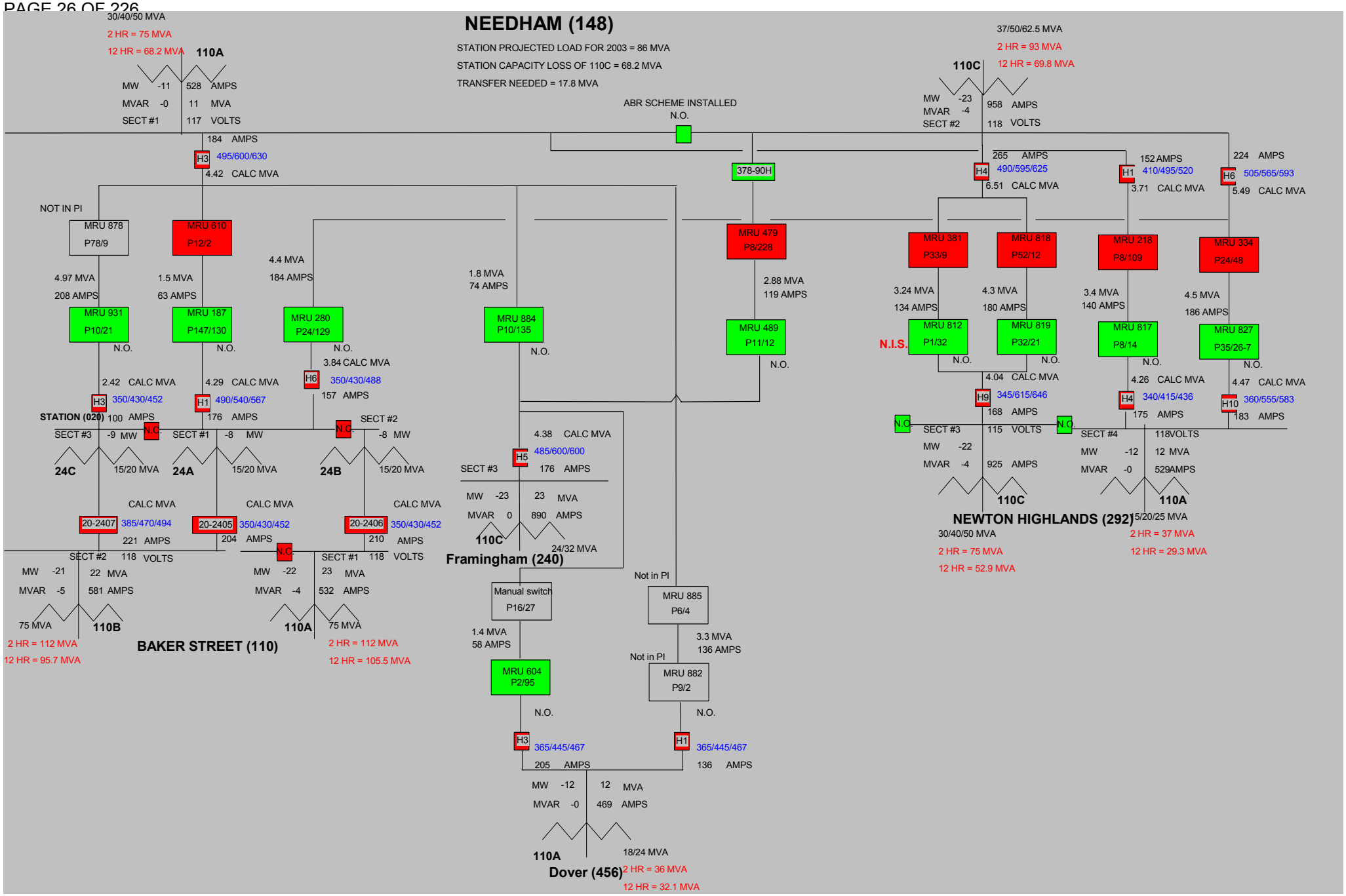
NEEDHAM (148)
STATION PROJECTED LOAD FOR 2003 = 86 MVA
STATION CAPACITY LOSS OF 110C = 68.2 MVA
TRANSFER NEEDED = 17.8 MVA
30/40/50 MVA
2 HR = 75 MVA
12 HR = 68.2 MVA
110A
MW -11 528 AMPS
MVAR -0 11 MVA
SECT #1 117 VOLTS
184 AMPS
H3 495/600/630
4.42 CALC MVA
ABR SCHEME INSTALLED
N.O.
378-90H
37/50/62.5 MVA
2 HR = 93 MVA
12 HR = 69.8 MVA
110C
MW -23 958 AMPS
MVAR -4
SECT #2 118 VOLTS
265 AMPS
H4 490/595/625
6.51 CALC MVA
152 AMPS
H1 410/495/520
3.71 CALC MVA
224 AMPS
H6 505/565/593
5.49 CALC MVA
NOT IN PI
MRU 878
P78/9
MRU 610
P12/2
4.4 MVA
184 AMPS
1.8 MVA
74 AMPS
MRU 479
P8/228
2.88 MVA
119 AMPS
MRU 381
P33/9
MRU 818
P52/12
MRU 218
P8/109
MRU 334
P24/48
4.97 MVA
208 AMPS
1.5 MVA
63 AMPS
3.24 MVA
134 AMPS
4.3 MVA
180 AMPS
3.4 MVA
140 AMPS
4.5 MVA
186 AMPS
MRU 931
P10/21
MRU 187
P147/130
MRU 280
P24/129
MRU 884
P10/135
MRU 489
P11/12
N.I.S.
MRU 812
P1/32
MRU 819
P32/21
MRU 817
P8/14
MRU 827
P35/26-7
N.O.
2.42 CALC MVA
H3 350/430/452
4.29 CALC MVA
H1 490/540/567
3.84 CALC MVA
H6 350/430/488
157 AMPS
4.04 CALC MVA
H9 345/615/646
168 AMPS
4.26 CALC MVA
H4 340/415/436
175 AMPS
4.47 CALC MVA
H10 360/555/583
183 AMPS
STATION (020) 100 AMPS
SECT #3 -9 MW
N.C.
SECT #1 -8 MW
SECT #2 -8 MW
24C
15/20 MVA
24A
24B
4.38 CALC MVA
H5 485/600/600
SECT #3 176 AMPS
MW -23 23 MVA
MVAR 0 890 AMPS
110C
24/32 MVA
Framingham (240)
SECT #3
MW -22
MVAR -4 925 AMPS
110C
SECT #4 118VOLTS
MW -12 12 MVA
MVAR -0 529AMPS
110A
NEWTON HIGHLANDS (292)
15/20/25 MVA
30/40/50 MVA
2 HR = 75 MVA
12 HR = 52.9 MVA
2 HR = 37 MVA
12 HR = 29.3 MVA
CALC MVA
20-2407 385/470/494
221 AMPS
20-2405 350/430/452
204 AMPS
20-2406 350/430/452
210 AMPS
SECT #2 118 VOLTS
MW -21 22 MVA
MVAR -5 581 AMPS
75 MVA
110B
2 HR = 112 MVA
12 HR = 95.7 MVA
MW -22 23 MVA
MVAR -4 532 AMPS
110A
75 MVA
2 HR = 112 MVA
12 HR = 105.5 MVA
BAKER STREET (110)
Manual switch
P16/27
1.4 MVA
58 AMPS
MRU 604
P2/95
Not in PI
MRU 885
P6/4
3.3 MVA
136 AMPS
Not in PI
MRU 882
P9/2
H3 365/445/467
205 AMPS
H1 365/445/467
136 AMPS
MW -12 12 MVA
MVAR -0 469 AMPS
110A
18/24 MVA
2 HR = 36 MVA
12 HR = 32.1 MVA
Dover (456)

2003 T&D OPERATING STUDY
MASS. AVENUE DISTRICT

STATION #329 BRIGHTON

Transformer #110A: Waukesha 75/110/125 MVA 115/14.4/14.4 kV
Transformer #110B: Allis Chalmers 100 MVA 110/24.3/13.8/13.8 kV
Transformer #110C: Westinghouse 100 / 112 MVA 110/13.8/13.8 kV

Overload Ratings:

Transformer	Nameplate	12 hour LTE, 90F Ambient	12 hour LTE, 110F Ambient
110A	84/112/140 MVA	175 MVA	164 MVA
110B	100 MVA	142 MVA	132 MVA
110C	100/112 MVA	142 MVA	133 MVA

Station Capabilities:

Total Station Capacity (N)	Station Firm Capacity (LTE)	RADSEC Transfer	Manual Transfer	Total LCC
340 MVA	244 MVA	15 MVA	2 MVA	261 MVA

Switching Actions:

Loss of Transformer #110A:

Open: Circuit Breakers #5 and #6
Disconnect Switch #T730
Main 110A 13.8kV Circuit Breaker
Close: Sections 1, 3 and 5 operate normally closed.
Sections 2, 4 and 6 operate normally open. Upon the loss of transformer 110A the ABR scheme closes section #4 and section #6 tie breakers. Sections 2, 4 and 6 are now tied together.
Circuit Breakers #5 and #6 to close 115kV ring

Loss of Transformer #110B:

Open: Circuit Breakers #8 and #9
Disconnect Switch #T731
Main 110B 13.8kV Circuit Breaker
Close: Sections 1, 3 and 5 operate normally closed.
Sections 2, 4 and 6 operate normally open. Upon the loss of transformer 110B the ABR scheme closes section #4 and section #6 tie breakers. Sections 2, 4 and 6 are now tied together.
Circuit Breakers #8 and #9 to close 115kV ring

Loss of Transformer #110C:

Open: Circuit Breakers #2 and #3
Circuit Switcher #CS771
Main 110c 13.8kV Circuit Breaker

Close: Sections 1, 3 and 5 operate normally closed.
Sections 2, 4 and 6 operate normally open. Upon the loss of transformer 110C the ABR scheme closes the section #4 and section #6 tie breakers. Sections 2, 4 and 6 are now tied together.
Circuit Breakers #2 and #3 to close 115kV ring

Results:

Loading - No heavy loading conditions were identified.

Voltage - No low voltage conditions were identified.

Additional Actions Required:

None

STATION 329
350 LINCOLN ST.
BRIGHTON
BRIGHTON RING
PAGE 1

TEL #1-(617)541-7106 (CONTROL ROOM)
TEL #1-(617)541-7104 (BLOCK HOUSE)
TEL #1-(617)541-7105 (PUMP HOUSE)

NOTES:

1-130V SUPERVISORY CONTROL EQUIP. BATTERY WITH CHARGER.
MICROWAVE SYSTEM BETWEEN STATIONS (329-305) (329-250) (329-110) (329-71) (329-2) (329-282)
FZ0-34 = ALLIS CHALMERS TYPE FZ0-34-13000F OIL CIRCUIT BREAKERS.
FZ0 = " " " FZ0-3-150-34F " " "
150CA = WESTINGHOUSE " 150-CA-1500 AIR CIRCUIT BREAKERS.
AM-500-2,-3, AM-500H-4 = GEN. ELEC. TYPE AM-13B-500 AIR CIRCUIT BREAKERS.
RADIO STATION KCA 643
SCADA CONTROL & SUPERVISION.
1-13B VOLT CONTROL BATTERY WITH 2-20KW CHARGING SETS.
BZ0-115-00000-2 = ALLIS CHALMERS OIL CIRCUIT BREAKERS
FK-121 = GE TYPE FK-121-650000-0 OIL CIRCUIT BREAKERS.
121 PM-63-30 = ABB SF6 CIRCUIT BREAKER

* CIRCUIT SWITCHER EQUIPPED WITH SHUNT TRIP DEVICE

△ AUTOMATIC BUS TIE CLOSING SCHEME. LOSS OF TRANSFORMER 110A, 110B OR 110C DUE TO TRANSFORMER DIFFERENTIAL OR 115KV STUCK BREAKER RELAY OPERATION WILL TRIP THE CORRESPONDING TRANSFORMERS SECONDARY BREAKER AND CLOSE BREAKERS 3Z & 4B TO TIE BUS #2. 315-170 & 315-157 X&Y DISC'S LOCATED IN BASEMENT.

WHEN SWITCHING ANY SECONDARY BREAKER OF 110A, 110B OR 110C, CHECK ALL 13B AND 25KV SECONDARY BREAKERS AND 329-2215 FOR IMBALANCES.

MAKE SURE THE "CIRCUIT AUTO RESTORAL" SCHEME IS OFF ON 549-924 BEFORE PUTTING STATION ON LOCAL OR WHEN CHECKING FOR DC GROUNDS.

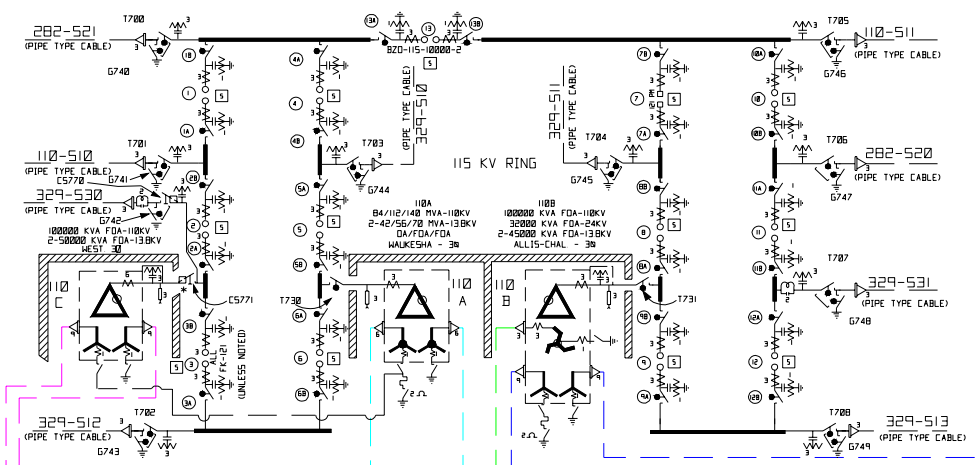

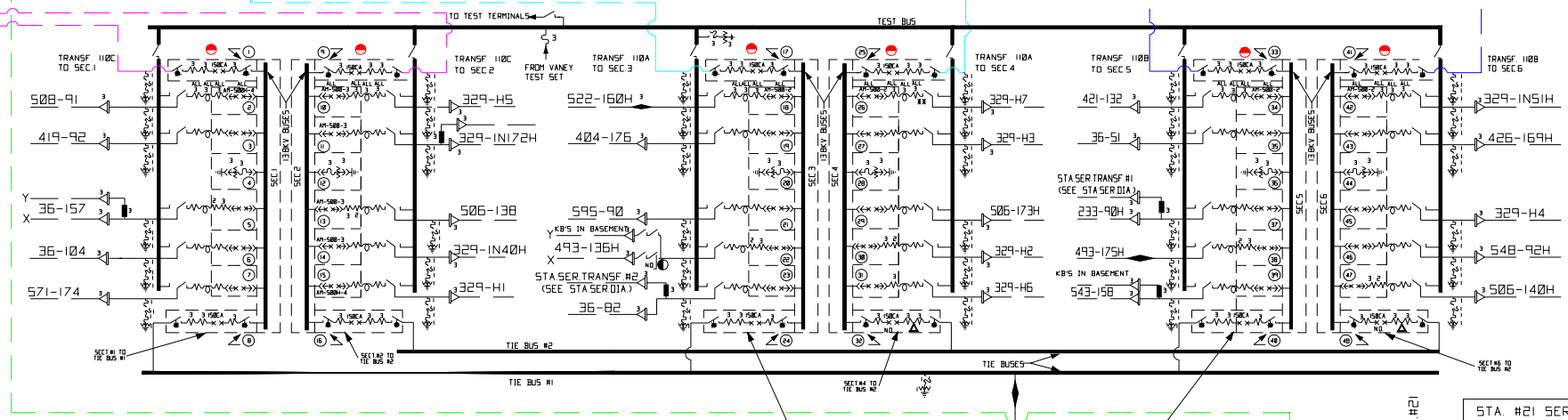

◐ 493-136HX BLADES IN BASEMENT STAY OPEN TO LINE 493-136H

IN & OUT
IN & OUT
TOTALITY METERING FOR ALL LINES SUPPLYING THE CAMBRIDGE ELECTRIC LIGHT CO. LOCATED AT STA. 130

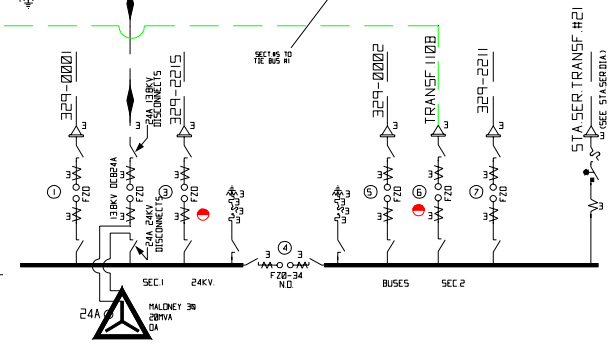

STA. #21 SERVICE TRANSF. L.B. & P.F. SO CLOSE TOGETHER IT IS UNSAFE TO OPERATE L.B.; BUS SECT. MUST BE TAKEN OUT; L.B. CANNOT BE OPERATED ALIVE.

NSTAR ELECTRIC
AN NSTAR COMPANY

329

DATE	DESCRIPTION	BY	CHCK
10/22/02	BREAKER #7 CHANGED FROM OIL TO SF6 BREAKER	EBA	RBB
7/11/02	REMOVED LINES 329-IN172H, 493-136H, 329-H7, 426-169 & ADDED N.O. TO 25KV 1-2 BUS TIE BRKR.	EBA	RBB
6/19/02	REVISED PER ENGINEER'S MARK-UP.	EBA	RBB
6/3/02	ADDED WAUKESHA XFMR. INFO & 25KV MALONEY XFMR	EBA	RBB
4/26/02	REVISED PER FIELD INFORMATION.	EBA	RBB

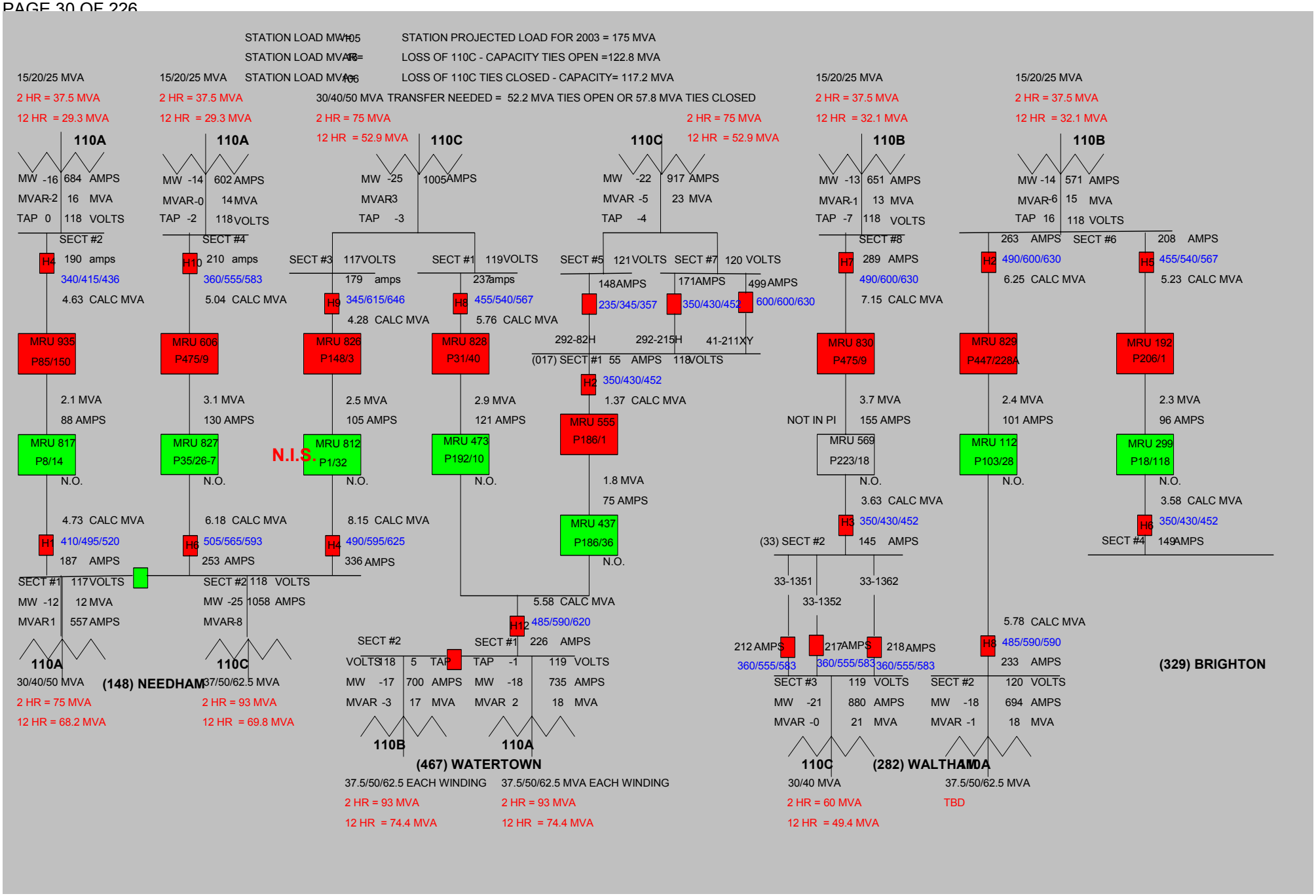
STATION LOAD MW= 105
STATION LOAD MVAR= 18
STATION LOAD MVA= 106
STATION PROJECTED LOAD FOR 2003 = 175 MVA
LOSS OF 110C - CAPACITY TIES OPEN =122.8 MVA
LOSS OF 110C TIES CLOSED - CAPACITY= 117.2 MVA
30/40/50 MVA TRANSFER NEEDED = 52.2 MVA TIES OPEN OR 57.8 MVA TIES CLOSED
15/20/25 MVA
2 HR = 37.5 MVA
12 HR = 29.3 MVA
110A
MW -16 684 AMPS
MVAR -2 16 MVA
TAP 0 118 VOLTS
SECT #2
H4 190 amps
340/415/436
4.63 CALC MVA
MRU 935
P85/150
2.1 MVA
88 AMPS
MRU 817
P8/14
N.O.
4.73 CALC MVA
H1 410/495/520
187 AMPS
SECT #1 117 VOLTS
MW -12 12 MVA
MVAR 1 557 AMPS
110A
30/40/50 MVA
2 HR = 75 MVA
12 HR = 68.2 MVA
(148) NEEDHAM
15/20/25 MVA
2 HR = 37.5 MVA
12 HR = 29.3 MVA
110A
MW -14 602 AMPS
MVAR -0 14 MVA
TAP -2 118 VOLTS
SECT #4
H10 210 amps
360/555/583
5.04 CALC MVA
MRU 606
P475/9
3.1 MVA
130 AMPS
MRU 827
P35/26-7
N.O.
6.18 CALC MVA
H6 505/565/593
253 AMPS
SECT #2 118 VOLTS
MW -25 1058 AMPS
MVAR -8
110C
37/50/62.5 MVA
2 HR = 93 MVA
12 HR = 69.8 MVA
30/40/50 MVA
2 HR = 75 MVA
12 HR = 52.9 MVA
110C
MW -25 1005 AMPS
MVAR 3
TAP -3
SECT #3 117 VOLTS
179 amps
H9 345/615/646
4.28 CALC MVA
MRU 826
P148/3
2.5 MVA
105 AMPS
MRU 812
P1/32
N.O.
8.15 CALC MVA
H4 490/595/625
336 AMPS
N.I.S.
SECT #1 119 VOLTS
237 amps
H8 455/540/567
5.76 CALC MVA
MRU 828
P31/40
2.9 MVA
121 AMPS
MRU 473
P192/10
N.O.
5.58 CALC MVA
H12 485/590/620
SECT #2
VOLTS 118 5 TAP
MW -17 700 AMPS
MVAR -3 17 MVA
110B
SECT #1
TAP -1 119 VOLTS
MW -18 735 AMPS
MVAR 2 18 MVA
110A
(467) WATERTOWN
37.5/50/62.5 EACH WINDING
2 HR = 93 MVA
12 HR = 74.4 MVA
37.5/50/62.5 MVA EACH WINDING
2 HR = 93 MVA
12 HR = 74.4 MVA
2 HR = 75 MVA
12 HR = 52.9 MVA
110C
MW -22 917 AMPS
MVAR -5 23 MVA
TAP -4
SECT #5 121 VOLTS
148 AMPS
235/345/357
SECT #7 120 VOLTS
171 AMPS
350/430/452
499 AMPS
600/600/630
292-82H
292-215H
41-211XY
(017) SECT #1 55 AMPS 118 VOLTS
H2 350/430/452
1.37 CALC MVA
MRU 555
P186/1
1.8 MVA
75 AMPS
MRU 437
P186/36
N.O.
15/20/25 MVA
2 HR = 37.5 MVA
12 HR = 32.1 MVA
110B
MW -13 651 AMPS
MVAR -1 13 MVA
TAP -7 118 VOLTS
SECT #8
H7 289 AMPS
490/600/630
7.15 CALC MVA
MRU 830
P475/9
3.7 MVA
NOT IN PI 155 AMPS
MRU 569
P223/18
N.O.
3.63 CALC MVA
H3 350/430/452
(33) SECT #2 145 AMPS
33-1351
33-1352
33-1362
212 AMPS
360/555/583
217 AMPS
360/555/583
218 AMPS
360/555/583
SECT #3 119 VOLTS
MW -21 880 AMPS
MVAR -0 21 MVA
110C
30/40 MVA
2 HR = 60 MVA
12 HR = 49.4 MVA
(282) WALTHAM
15/20/25 MVA
2 HR = 37.5 MVA
12 HR = 32.1 MVA
110B
MW -14 571 AMPS
MVAR -6 15 MVA
TAP 16 118 VOLTS
263 AMPS
SECT #6
208 AMPS
H2 490/600/630
6.25 CALC MVA
MRU 829
P447/228A
2.4 MVA
101 AMPS
MRU 112
P103/28
N.O.
5.78 CALC MVA
H8 485/590/590
233 AMPS
SECT #2 120 VOLTS
MW -18 694 AMPS
MVAR -1 18 MVA
110A
37.5/50/62.5 MVA
TBD
H5 455/540/567
5.23 CALC MVA
MRU 192
P206/1
2.3 MVA
96 AMPS
MRU 299
P18/118
N.O.
3.58 CALC MVA
H6 350/430/452
SECT #4 149 AMPS
(329) BRIGHTON

2003 T&D OPERATING STUDY
MASS. AVENUE DISTRICT

STATION #483 DEWAR STREET

Transformer #110A: McGraw-Edison 84 / 112 / 140 MVA 115/14.4/14.4 kV
Transformer #110B: General Electric 84 / 112 / 140 MVA 115/14.4/14.4 kV

Overload Ratings:

Transformer	Nameplate	12 hour LTE, 90F Ambient	12 hour LTE, 110F Ambient
110A	84/112/140 MVA	175 MVA	164 MVA
110B	84/112/140 MVA	182 MVA	170 MVA

Station Capabilities:

Total Station Capacity (N)	Station Firm Capacity (LTE)	RADSEC Transfer	Manual Transfer	Total LCC
265 MVA	151 MVA*	0 MVA	2 MVA	153 MVA

* Based upon 110A/483-524 or 110B/483-525.

Switching Actions:

Loss of Transformer #110A also isolates the 483-524 Line and 110D @ Andrew Sq

Open: OCB's 13 & 14 @ K Street
OCB 3 and CS774 @ Andrew Sq (110D transformer)
Circuit Switcher CS771
Both Main 110A 13.8kV Circuit Breakers
Close: ABR scheme closes bus ties
Manually close OCB's 13 & 14 @ K Street
Manually close OCB 3, CS774 and restore 110D @ Andrew Sq

Loss of Transformer #110B also isolates the 483-525 Line and 110C @ Andrew Sq

Open: OCB's 4 & 7 @ K Street
OCB 1 and CS772 @ Andrew Sq (110C transformer)
Circuit Switcher CS770
Both Main 110B 13.8kV Circuit Breakers
Close: ABR scheme closes bus ties
Manually close OCB's 4 & 7 @ K Street
Manually close OCB 1, CS772 and restore 110C @ Andrew Sq

Results:

Loading	-	No heavy loading conditions were identified.
Voltage	-	No low voltage conditions were identified.

Additional Actions Required: None

STATION 483
DEWAR ST.
DORCHESTER

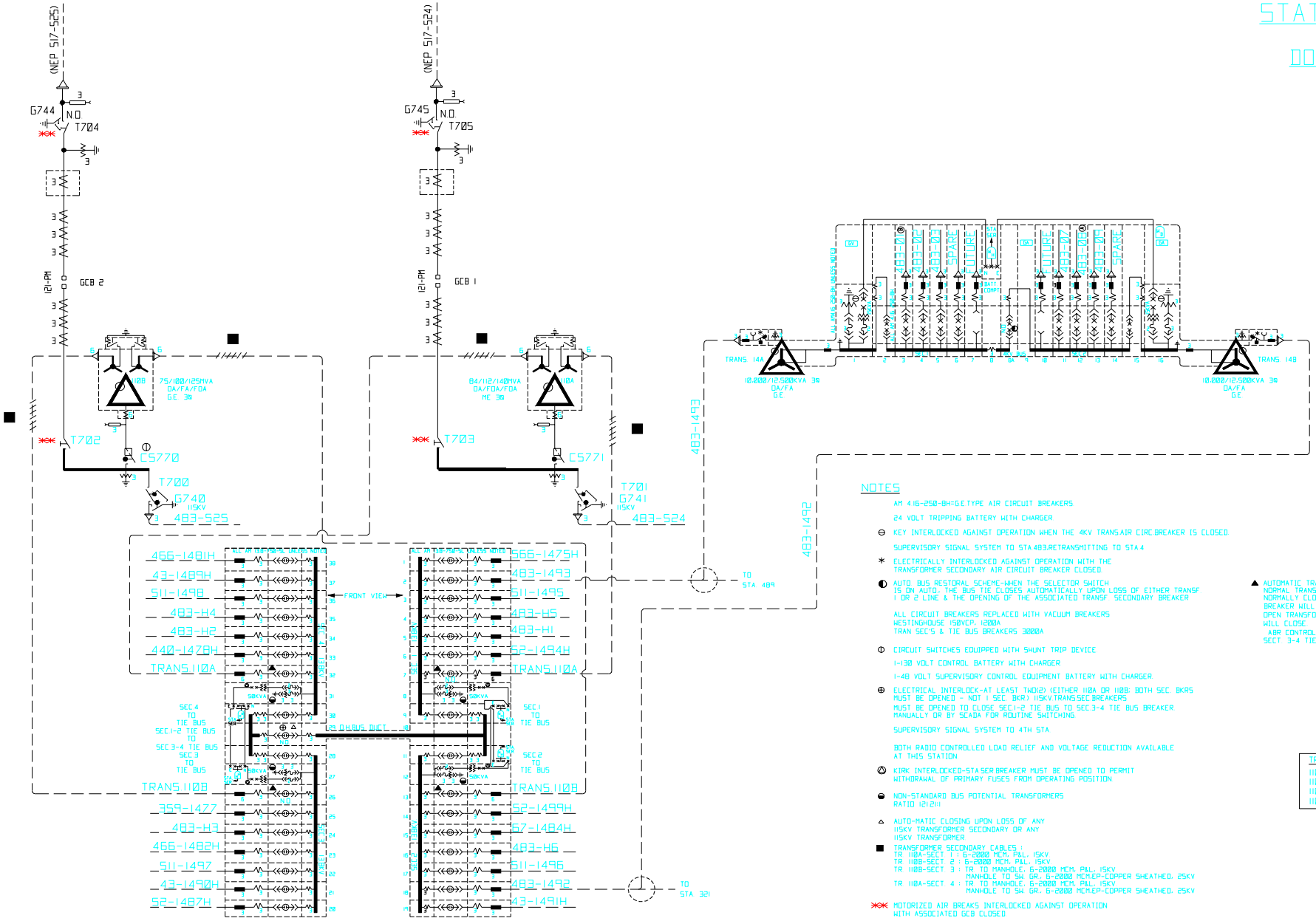

NOTES

AM 4.16-250-BH=G.E.TYPE AIR CIRCUIT BREAKERS

24 VOLT TRIPPING BATTERY WITH CHARGER

⊖ KEY INTERLOCKED AGAINST OPERATION WHEN THE 4KV TRANS.AIR CIRC.BREAKER IS CLOSED.

SUPERVISORY SIGNAL SYSTEM TO STA.483.RETRANSMITTING TO STA.4

✳ ELECTRICALLY INTERLOCKED AGAINST OPERATION WITH THE TRANSFORMER SECONDARY AIR CIRCUIT BREAKER CLOSED.

◐ AUTO. BUS RESTORAL SCHEME=WHEN THE SELECTOR SWITCH IS ON AUTO, THE BUS TIE CLOSES AUTOMATICALLY UPON LOSS OF EITHER TRANSF. 1 OR 2 LINE & THE OPENING OF THE ASSOCIATED TRANSF. SECONDARY BREAKER

ALL CIRCUIT BREAKERS REPLACED WITH VACUUM BREAKERS
WESTINGHOUSE 150VCP, 1200A
TRAN SEC'S & TIE BUS BREAKERS 3000A

⦶ CIRCUIT SWITCHES EQUIPPED WITH SHUNT TRIP DEVICE.

1-130 VOLT CONTROL BATTERY WITH CHARGER

1-48 VOLT SUPERVISORY CONTROL EQUIPMENT BATTERY WITH CHARGER.

⊕ ELECTRICAL INTERLOCK-AT LEAST TWO(2) (EITHER 110A OR 110B; BOTH SEC. BKRS MUST BE OPENED - NOT 1 SEC. BKR) 115KV TRANS.SEC.BREAKERS MUST BE OPENED TO CLOSE SEC.1-2 TIE BUS TO SEC.3-4 TIE BUS BREAKER MANUALLY OR BY SCADA FOR ROUTINE SWITCHING

SUPERVISORY SIGNAL SYSTEM TO 4TH STA

BOTH RADIO CONTROLLED LOAD RELIEF AND VOLTAGE REDUCTION AVAILABLE AT THIS STATION

△ KIRK INTERLOCKED-STA.SER.BREAKER MUST BE OPENED TO PERMIT WITHDRAWAL OF PRIMARY FUSES FROM OPERATING POSITION

◒ NON-STANDARD BUS POTENTIAL TRANSFORMERS
RATIO 121:211

△ AUTO-MATIC CLOSING UPON LOSS OF ANY 115KV TRANSFORMER SECONDARY OR ANY 115KV TRANSFORMER

■ TRANSFORMER SECONDARY CABLES :
TR 110A-SECT 1 : 6-2000 MCM, P&L, 15KV
TR 110B-SECT 2 : 6-2000 MCM, P&L, 15KV
TR 110B-SECT 3 : TR. TO MANHOLE, 6-2000 MCM, P&L, 15KV
MANHOLE TO SW. GR. 6-2000 MCM,EP-COPPER SHEATHED, 25KV
TR 110A-SECT 4 : TR. TO MANHOLE, 6-2000 MCM, P&L, 15KV
MANHOLE TO SW. GR. 6-2000 MCM,EP-COPPER SHEATHED, 25KV

✳✳ MOTORIZED AIR BREAKS INTERLOCKED AGAINST OPERATION WITH ASSOCIATED GCB CLOSED

- 121-PM ABB 121 PM-63-30-SF6 CIRCUIT BREAKER.

▲ AUTOMATIC TRANSFORMER CLOSING ON LOSS OF NORMAL TRANSFORMER SUPPLY TO 14KV BUS THE NORMALLY CLOSED TRANSFORMER SECONDARY BREAKER WILL OPEN AND THE NORMALLY OPEN TRANSFORMER SECONDARY BREAKER WILL CLOSE.
ABR CONTROL IN SEC. 1-2 TO SECT. 3-4 TIE BUS CUBICLE

TRANSFORMER + SCHEDULE
110A TO SECTION #1 OPEN
110A TO SECTION #4 CLOSED
110B TO SECTION #2 CLOSED
110B TO SECTION #3 OPEN

DATE	DESCRIPTION	BY	CHCK
10/22/02	REMOVED (NO) DESIGNATION FROM TR 110A & 110B & CHANGED XFMR #1 & #2 TO 14A & 14B		
9/4/02	ADDED TAPS OFF LINES 483-1492 & 483-1493	EBA	DEF/RBB
		EBA	RBB

NSTAR ELECTRIC
AN NSTAR COMPANY

483

2003 T&D OPERATING STUDY
MASS. AVENUE DISTRICT

STATION #492 SCOTIA STREET

Transformer #110A: McGraw-Edison 84 / 112 / 140 MVA 115/14.4/14.4 kV
Transformer #110B: McGraw-Edison 84 / 112 / 140 MVA 115/14.4/14.4 kV

Overload Ratings:

Transformer	Nameplate	12 hour LTE, 90F Ambient	12 hour LTE, 110F Ambient
110A	84/112/140 MVA	175 MVA	164 MVA
110B	84/112/140 MVA	173 MVA	162 MVA

Station Capabilities:

Total Station Capacity (N)	Station Firm Capacity (LTE)	RADSEC Transfer	Manual Transfer	Total LCC
250 MVA	151 MVA*	0 MVA	0 MVA	151 MVA

* Based upon loss of 110A/329-512 Line or 110B/329-513 Line.

Switching Actions:

Loss of Transformer #110A also isolates the 329-512 line and 110A transformer @ Carver St

Open: OCB's 1 & 2 @ Kingston St
OCB's 3 & 6 @ Brighton
Circuit Switcher CS771 and the 110A transformer @ Carver St
Circuit Switcher CS771
Both Main 110A 13.8kV Circuit Breakers
Close: Nothing, bus tie operated normally closed
Manually close OCB's 1 & 2 @ Kingston St
Manually close OCB's 3 & 6 @ Brighton
Manually close CS771 and restore 110A @ Carver St

Loss of Transformer #110B also isolates the 329-513 line and 110B transformer @ Carver St

Open: OCB's 4 & 5 @ Kingston St
OCB's 9 & 12 @ Brighton
Circuit Switcher CS770 and the 110B transformer @ Carver St
Circuit Switcher CS770
Both Main 110B 13.8kV Circuit Breakers
Close: Nothing, bus tie operated normally closed
Manually close OCB's 4 & 5 @ Kingston St
Manually close OCB's 9 & 12 @ Brighton
Manually close CS770 and restore 110B @ Carver St

Results:

Loading	-	No heavy loading conditions were identified.
Voltage	-	No low voltage conditions were identified.

Additional Actions Required: None

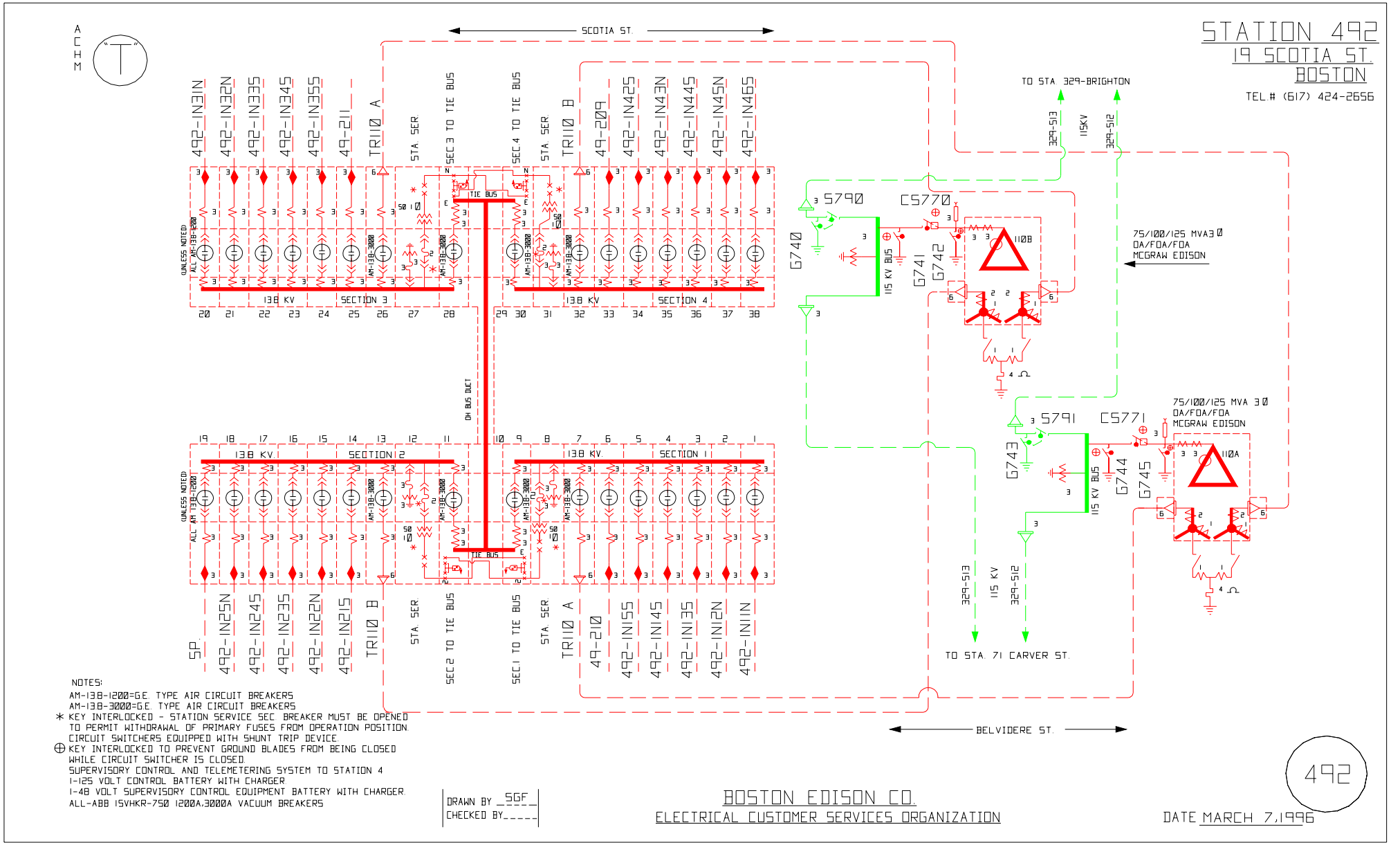
STATION 492
19 SCOTIA ST.
BOSTON
TEL.# (617) 424-2656
SCOTIA ST.
BELVIDERE ST.
TO STA. 329-BRIGHTON
TO STA. 71 CARVER ST.
75/100/125 MVA 3Ø
OA/FOA/FOA
MCGRAW EDISON
13.8 KV
SECTION 1
SECTION 2
SECTION 3
SECTION 4
TIE BUS
OH BUS DUCT
115 KV BUS
115 KV
329-513
329-512
NOTES:
AM-13.8-1200=G.E. TYPE AIR CIRCUIT BREAKERS
AM-13.8-3000=G.E. TYPE AIR CIRCUIT BREAKERS
* KEY INTERLOCKED - STATION SERVICE SEC. BREAKER MUST BE OPENED TO PERMIT WITHDRAWAL OF PRIMARY FUSES FROM OPERATION POSITION. CIRCUIT SWITCHERS EQUIPPED WITH SHUNT TRIP DEVICE.
⊕ KEY INTERLOCKED TO PREVENT GROUND BLADES FROM BEING CLOSED WHILE CIRCUIT SWITCHER IS CLOSED.
SUPERVISORY CONTROL AND TELEMETERING SYSTEM TO STATION 4
1-125 VOLT CONTROL BATTERY WITH CHARGER.
1-48 VOLT SUPERVISORY CONTROL EQUIPMENT BATTERY WITH CHARGER.
ALL-ABB 15VHKR-750 1200A,3000A VACUUM BREAKERS
DRAWN BY SGF
CHECKED BY
BOSTON EDISON CO.
ELECTRICAL CUSTOMER SERVICES ORGANIZATION
DATE MARCH 7,1996
492

2003 T&D OPERATING STUDY
MASS. AVENUE DISTRICT

STATION #496 HYDE PARK

Transformer #110A: General Electric 84 / 112 / 140 MVA 115/14.4/14.4 kV
Transformer #110B: General Electric 84 / 112 / 140 MVA 115/14.4/14.4 kV

Overload Ratings:

Transformer	Nameplate	12 hour LTE, 90F Ambient	12 hour LTE, 110F Ambient
110A	84/112/140 MVA	182 MVA	170 MVA
110B	84/112/140 MVA	182 MVA	170 MVA

Station Capabilities:

Total Station Capacity (N)	Station Firm Capacity (LTE)	RADSEC Transfer	Manual Transfer	Total LCC
280 MVA	151 MVA*	0 MVA	5 MVA	156 MVA*

* Based upon loss of 110A/496-528 line or 110B/496-529 line.

Switching Actions:

Loss of Transformer #110A and 496-528 Line

Open: OCB's 14 & 15 @ Baker St
Circuit Switcher CS770
Both Main 110A 13.8kV Circuit Breakers
Close: ABR scheme closes bus ties automatically
Manually close OCB's 14 & 15 @ Baker St

Loss of Transformer #110B and 496-529 Line

Open: OCB's 4 & 5 and CS770 @ Baker St
Circuit Switcher CS771
Both Main 110B 13.8kV Circuit Breakers
Close: ABR scheme closes bus ties automatically
Manually close OCB's 4 & 5 and CS770 @ Baker St

Results:

While not required for loss of either transformer, transfer of the following DSS lines via RADSEC and/or manual switches may also be conducted for load relief:

Hyde Park 496-H2 to Canton 470-H7 via RADSEC MRU 841 and manual switch on P3/224 for a transfer of 3.1 MVA

Hyde Park 344-1412H to Station 20-H3 via manual switch P130/1 and RADSEC MRU 544 for a transfer of 2.2 MVA

Total Transfer: 5.3 MVA

Loading	No heavy loading conditions were identified.
Voltage	For the load transfer of 496-H2 to 470-H7, a switched capacitor bank may be required for post-contingency low voltage mitigation.

Additional Actions Required:

None

STATION 496
HYDE PARK AVE.
HYDE PARK
TEL#541-7061

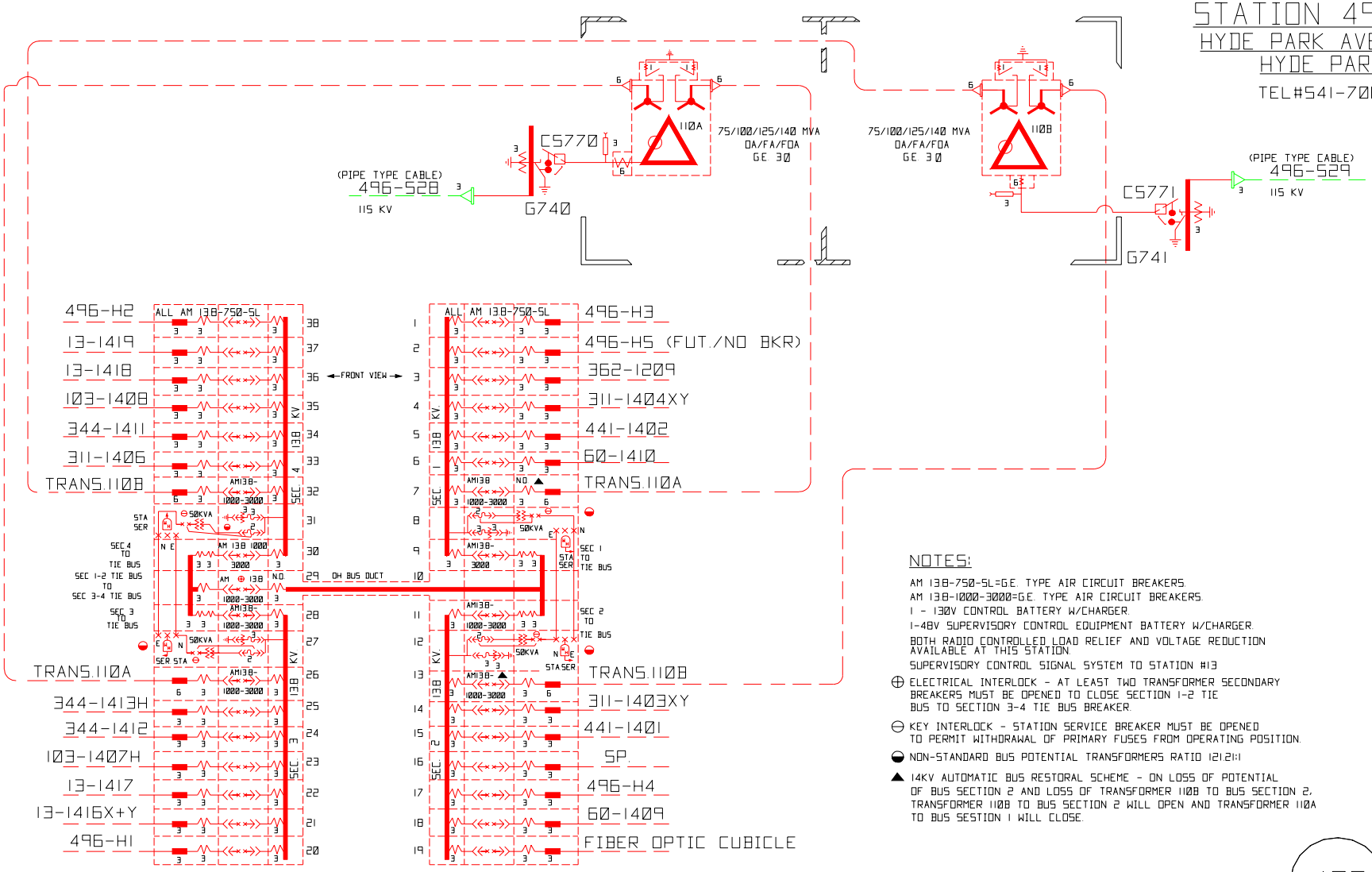

NOTES:

AM 138-750-SL=G.E. TYPE AIR CIRCUIT BREAKERS.
AM 138-1000-3000=G.E. TYPE AIR CIRCUIT BREAKERS.
1 - 130V CONTROL BATTERY W/CHARGER.
1-48V SUPERVISORY CONTROL EQUIPMENT BATTERY W/CHARGER.
BOTH RADIO CONTROLLED LOAD RELIEF AND VOLTAGE REDUCTION AVAILABLE AT THIS STATION.
SUPERVISORY CONTROL SIGNAL SYSTEM TO STATION #13

⊕ ELECTRICAL INTERLOCK - AT LEAST TWO TRANSFORMER SECONDARY BREAKERS MUST BE OPENED TO CLOSE SECTION 1-2 TIE BUS TO SECTION 3-4 TIE BUS BREAKER.

⊖ KEY INTERLOCK - STATION SERVICE BREAKER MUST BE OPENED TO PERMIT WITHDRAWAL OF PRIMARY FUSES FROM OPERATING POSITION.

◒ NON-STANDARD BUS POTENTIAL TRANSFORMERS RATIO 121:1

▲ 14KV AUTOMATIC BUS RESTORAL SCHEME - ON LOSS OF POTENTIAL OF BUS SECTION 2 AND LOSS OF TRANSFORMER 110B TO BUS SECTION 2, TRANSFORMER 110B TO BUS SECTION 2 WILL OPEN AND TRANSFORMER 110A TO BUS SESTION 1 WILL CLOSE.

496

BOSTON EDISON COMPANY
DELIVERY ENGINEERING DEPARTMENT
ELECTRICAL DESIGN DRAFTING GROUP

DATE NOV. 26 2001

DATE	DESCRIPTION	BY	CHCK
11/26/01	REV LINE NUMBERS - CUB. 1,2,16 & 17	WJB	

_STA.DIA\STA496, 05/14/96 at 13:52

344-1312H & H1 Normal State. No problems during normal conditions.

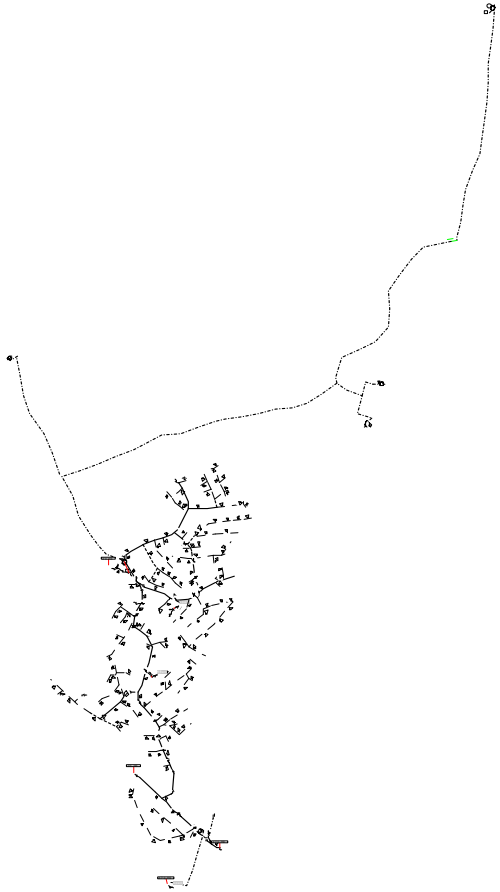

Voltage Drop Summary

Feeder	**344-1412H & H1**
Substation	STA496
Source Voltage	14.28 kVLL, 0.00 Deg.

Parameters

Analysis Type	Unbalanced Voltage Drop
Flag Levels	Summer, Emergency
Load Model	Nominal
Load Factor	1.00 x (kW) 1.00 x (kVAR)

Load Summary

	Total Load			
	kW	kVAR	kVA	PF(%)
Total load read (Non-adjusted)	6961.14	2484.66	7391.28	94.18
Total load used (Adjusted)	6962.04	2485.91	7392.55	94.18
Total shunt capacitor (Adjusted)		1323.47		
Total shunt reactor (Adjusted)		0		
Total load from motor	0	0	0	0
Total power from generator	0	0	0	0
Total power to other feeder(s) (Loop)	0	0	0	0
Total conductor capacitances		538.05		
Total losses	83.97	1151	1154.06	7.28
Total power from substation	7046.01	1775.4	7266.25	96.97

Abnormal Conditions

	Phase	Count	Worst Condition	%
	A	0	1101303-39	93.65
Overload	B	0	1101303-39	93.66
	C	0	1101303-39	93.64
	A	0	1101194-1	98.99
Low Voltage	B	0	1101194-17	98.69
	C	0	1101194-347	98.96
	A	0	1101303-3	103.48
High Voltage	B	0	1101303-3	103.48
	C	0	1101303-3	103.48

496-H2 to 470-H7 load transfer. Voltage problems occurred during load transfer, one 1350 kVAR capacitor bank was installed on section 1100902-382 of circuit 470-H7. Normal voltage is maintained during the load transfer with the installation of the capacitor bank.

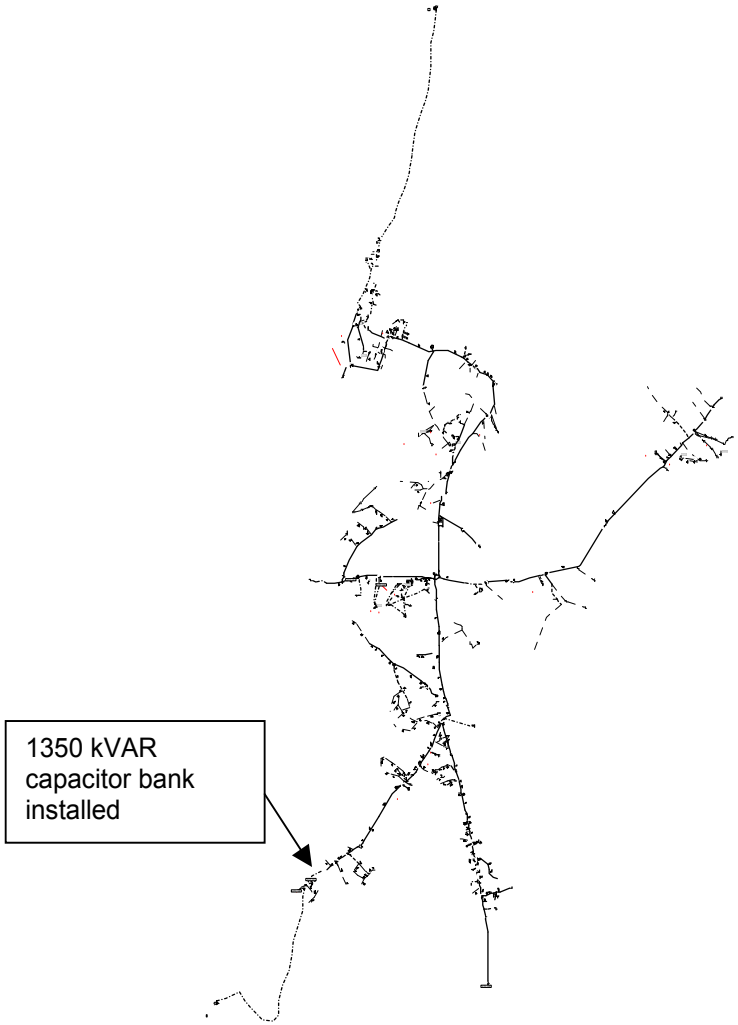

Voltage Drop Summary

Feeder	**470-H7**
Substation	STA470
Source Voltage	14.49 kVLL, 0.00 Deg.

Parameters

Analysis Type	Unbalanced Voltage Drop
Flag Levels	Summer, Emergency
Load Model	Nominal
Load Factor	1.00 x (kW) 1.00 x (kVAR)

Load Summary

	Total Load			
	kW	kVAR	kVA	PF(%)
Total load read (Non-adjusted)	10248.95	6477.24	12124.17	84.53
Total load used (Adjusted)	10250.14	6478.44	12125.82	84.53
Total shunt capacitor (Adjusted)		5127.85		
Total shunt reactor (Adjusted)		0		
Total load from motor	0	0	0	0
Total power from generator	0	0	0	0
Total power to other feeder(s) (Loop)	0	0	0	0
Total conductor capacitances		369.57		
Total losses	479.17	2364.03	2412.1	19.87
Total power from substation	10729.31	3345.05	11238.66	95.47

Abnormal Conditions

	Phase	Count	Worst Condition	%
	A	0	1100902-155	96.72
Overload	B	0	1100902-155	94.37
	C	0	1100902-155	97.98
	A	0	1100902-244	95.01
Low Voltage	B	0	1100902-244	95.41
	C	0	1100902-244	95.25
	A	1	1100902-590	105
High Voltage	B	1	1100902-590	105
	C	1	1100902-590	105

Voltage Drop Summary

Feeder	**496-H2**
Substation	STA496
Source Voltage	14.28 kVLL, 0.00 Deg.

Parameters

Analysis Type	Unbalanced Voltage Drop
Flag Levels	Summer, Emergency
Load Model	Nominal
Load Factor	1.00 x (kW) 1.00 x (kVAR)

Load Summary

	Total Load			
	kW	kVAR	kVA	PF(%)
Total load read (Non-adjusted)	1882.68	1373.43	2330.41	80.79
Total load used (Adjusted)	1882.66	1373.39	2330.37	80.79
Total shunt capacitor (Adjusted)		1455.81		
Total shunt reactor (Adjusted)		0		
Total load from motor	0	0	0	0
Total power from generator	0	0	0	0
Total power to other feeder(s) (Loop)	0	0	0	0
Total conductor capacitances		368.09		
Total losses	11.43	85.9	86.66	13.19
Total power from substation	1894.09	-364.61	1928.87	-98.2

Abnormal Conditions

	Phase	Count	Worst Condition	%
	A	0	1100962-3	12.98
Overload	B	0	1100962-3	14.17
	C	0	1100962-3	15.72
	A	0	1100962-335	100.75
Low Voltage	B	0	1100962-438	99.72
	C	0	1100962-335	100.37
	A	0	1100962-289	104.07
High Voltage	B	0	1100962-162	104.06
	C	0	1100962-162	103.7

2003 T&D OPERATING STUDY
MASS. AVENUE DISTRICT

STATION #514 KINGSTON STREET

Transformer #110A: McGraw-Edison 84 / 112 / 140 MVA 115/14.4/14.4 kV
Transformer #110B: McGraw-Edison 84 / 112 / 140 MVA 115/14.4/14.4 kV

Overload Ratings:

Transformer	Nameplate	12 hour LTE, 90F Ambient	12 hour LTE, 110F Ambient
110A	84/112/140 MVA	180 MVA	168 MVA
110B	84/112/140 MVA	180 MVA	168 MVA

Station Capabilities:

Total Station Capacity (N)	Station Firm Capacity (LTE)	RADSEC Transfer	Manual Transfer	Total LCC
280 MVA	151 MVA*	0 MVA	0 MVA	151 MVA

* Based upon loss of 110A/385-510 or 110B/385-511.

Switching Actions:

Loss of Transformer #110A also isolates the 385-510 Line and Transformers 110A&110B @ High St

Open: OCB's 8 & 9 @ Kingston St
OCB's 10 & 11 @ K Street
Circuit Switchers CS770 (110A Tranf) and CS773 (110B Tranf) @ High St
Circuit Switcher CS771
Both Main 110A 13.8kV Circuit Breakers
Close: Nothing, bus tie operated normally closed
Manually close OCB's 8 & 9 @ Kingston St
Manually close OCB's 10 & 11 @ K Street
Manually close Circuit Switchers CS770 and CS773 and restore 110A & 110B @ High St

Loss of Transformer #110B also isolates the 385-511 Line and Transformers 110C&110D @ High St

Open: OCB's 6, 10 & 11 @ Kingston St
OCB's 17 & 18 @ K Street
Circuit Switchers CS776 (110C Tranf) and CS775 (110D Tranf) @ High St
Circuit Switcher CS770
Both Main 110B 13.8kV Circuit Breakers
Close: Nothing, bus tie operated normally closed
Manually close OCB's 6, 10 & 11 @ Kingston St
Manually close OCB's 17 & 18 @ K Street

Manually close Circuit Switchers CS776 and CS775 and restore 110C & 110D @ High St

Results:

Loading	-	No heavy loading conditions were identified.
Voltage	-	No low voltage conditions were identified.

Additional Actions Required:

None

NOTES:

ALL ABB ISVHKR - 750 1200A & 3000A VACUUM BREAKERS

* KEY INTERLOCKED-STA.SERVICE SEC.BREAKER MUST BE OPENED TO PERMIT WITHDRAWL OF PRIMARY FUSES FROM OPERATING POSITION.

CIRCUIT SWITCHERS EQUIPPED WITH SHUNT TRIP DEVICE.

⊕ KEY INTERLOCKED TO PREVENT GROUND BLADES FROM BEING CLOSED WHILE CIRCUIT SWITCHER IS CLOSED.

SUPERVISORY CONTROL AND TELEMETERING SYSTEM TO STATION

1-125 VOLT CONTROL BATTERY WITH CHARGER.

RADIO CONTROLLED LOAD RELIEF AVAILABLE AT THIS STATION.

1-48 VOLT SUPERVISORY CONTROL EQUIPMENT BATTERY WITH CHARGER.

STATION 514N

KINGSTON ST. BOSTON PAGE 1

TEL # (617) 424-2274/451-1287

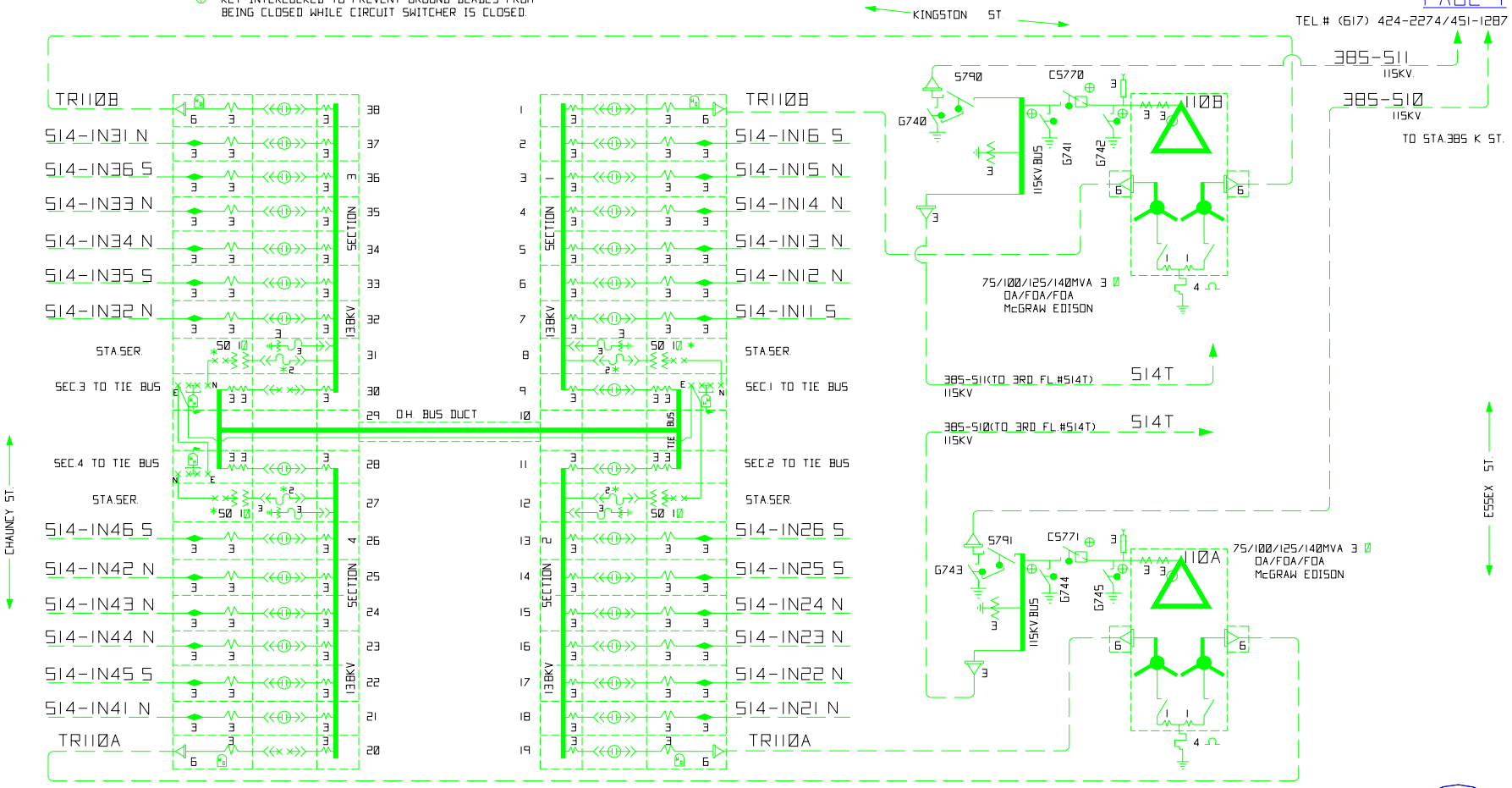

514N

DRAWN BY _____

CHECKED BY_____

BOSTON EDISON CO.

E.E. & S.O.D. DESIGN SERVICES

DATE FEB. 12,1996

2003 T&D OPERATING STUDY
MASS. AVENUE DISTRICT

STATION #828 ALEWIFE (CELCO)

Transformer T1: McGraw-Edison 30/40/50 [56] MVA 117.5/1.4 kV
Transformer T2: McGraw-Edison 30/40/50 [56] MVA 117.5/1.4 kV
Transformer T4: McGraw-Edison 30/40/50 [56] MVA 117.5/1.4 kV

Overload Ratings:

Transformer	Nameplate	12 hour LTE, 90F Ambient	12 hour LTE, 110F Ambient
T1	30/40/50 [56] MVA	71 MVA	66 MVA
T2	30/40/50 [56] MVA	70 MVA	64 MVA
T4	30/40/50 [56] MVA	70 MVA	64 MVA

Station Capabilities:

Total Station Capacity (N)	Station Firm Capacity (LTE)	RADSEC Transfer	Manual Transfer	Total LCC
168 MVA	119 MVA	0 MVA	0 MVA	119 MVA

Switching Actions:

Loss of Transformer #T1:

Open: Circuit Breakers #3 and #4 at Station 509 N. Cambridge
Main 13.8kV Circuit Breaker #26B72
Disconnect Switch #T732 at Station 509 N. Cambridge
Close: Circuit Breakers #3 and #4 at Station 509 N. Cambridge
13.8kV Bus Ties Operated Normally Closed

Loss of Transformer #T2:

Open: Circuit Breakers #6 and #7 at Station 509 N. Cambridge
Main 13.8kV Circuit Breaker #26B82
Disconnect Switch #T734 at Station 509 N. Cambridge
Close: Circuit Breakers #6 and #7 at Station 509 N. Cambridge
13.8kV Bus Ties Operated Normally Closed

Loss of Transformer #T4:

Open: Circuit Breakers #1 and #2 at Station 509 N. Cambridge
Main 13.8kV Circuit Breaker #26B102
Disconnect Switch #T733 at Station 509 N. Cambridge
Close: Circuit Breakers #1 and #2 at Station 509 N. Cambridge
13.8kV Bus Ties Operated Normally Closed

Results:

Loading - No heavy loading conditions were identified.

Voltage - No low voltage conditions were identified.

Additional Actions Required:

None

STATION 509
WHEELER ST.
NO. CAMBRIDGE
PAGE 2
EXT. 5424

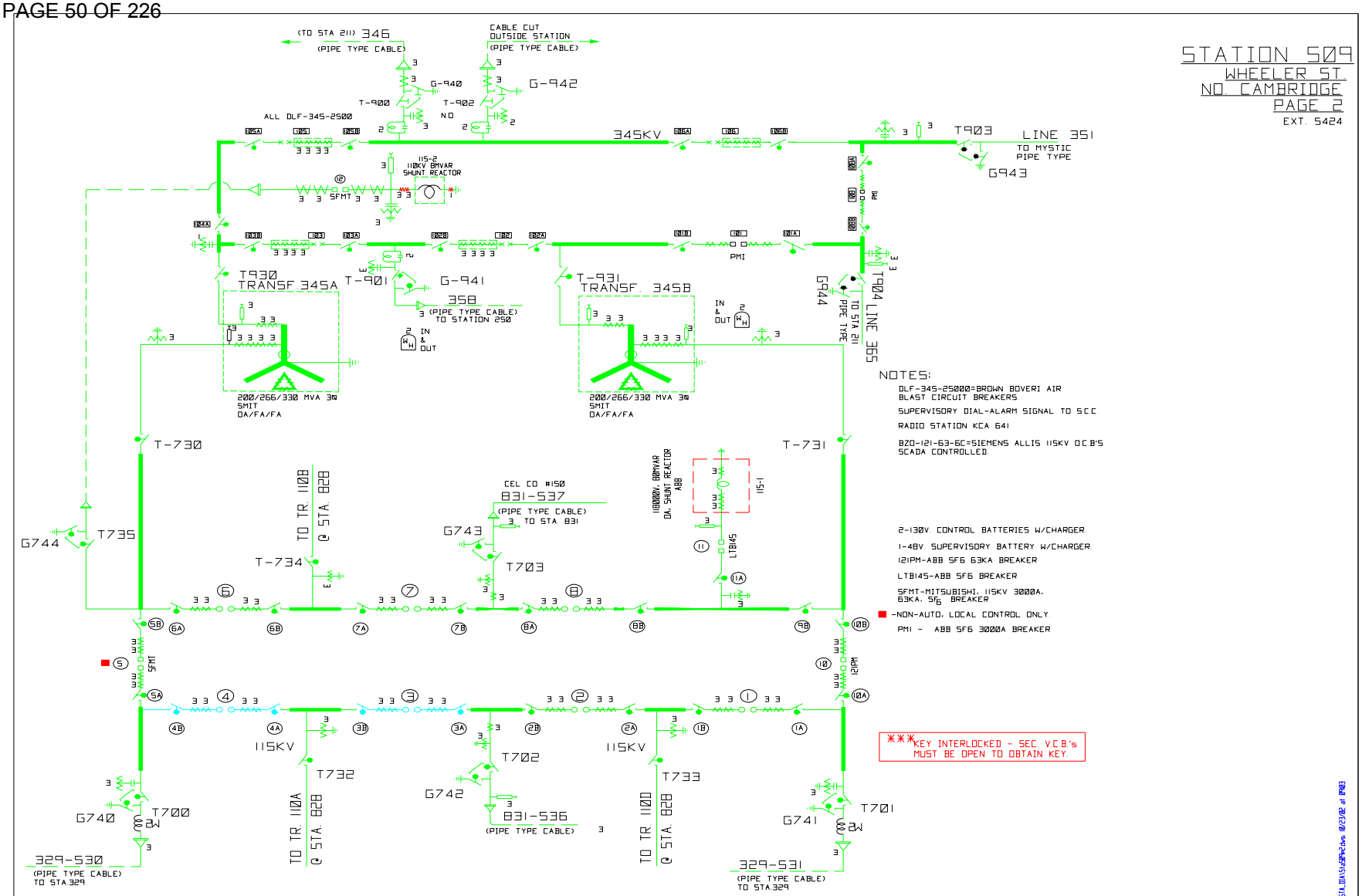

NOTES:

DLF-345-25000=BROWN BOVERI AIR BLAST CIRCUIT BREAKERS

SUPERVISORY DIAL-ALARM SIGNAL TO S.C.C.

RADIO STATION KCA 641

BZO-121-63-6C=SIEMENS ALLIS 115KV O.C.B'S SCADA CONTROLLED.

2-130V. CONTROL BATTERIES W/CHARGER

1-48V. SUPERVISORY BATTERY W/CHARGER

121PM-ABB SF6 63KA BREAKER

LTB145-ABB SF6 BREAKER

SFMT-MITSUBISHI, 115KV 3000A, 63KA, SF6 BREAKER

■ -NON-AUTO, LOCAL CONTROL ONLY.

PMI - ABB SF6 3000A BREAKER

***KEY INTERLOCKED - SEC. V.C.B.'s MUST BE OPEN TO OBTAIN KEY.

DATE	DESCRIPTION	BY	CHCK
10/22/02	STATION 828 EQUIPMENT REMOVED.	EBA	RBB
7/9/02	REVISED DWG. PER ENGINEER'S INFORMATION.	EBA	JB
3/22/02	REVISED DWG. PER ENGINEER'S INFORMATION.	EBA	
1/29/02	REVISED DWG. PER ENGINEER'S INFORMATION.	EBA	
1/22/02	RENAMED LINES 127-536 TO 831-536 & 127-537 TO 831-537	DBG	GPM

NSTAR ELECTRIC
AN NSTAR COMPANY

509

EBA# 2/22/00 Dwg.#GPM\STATION

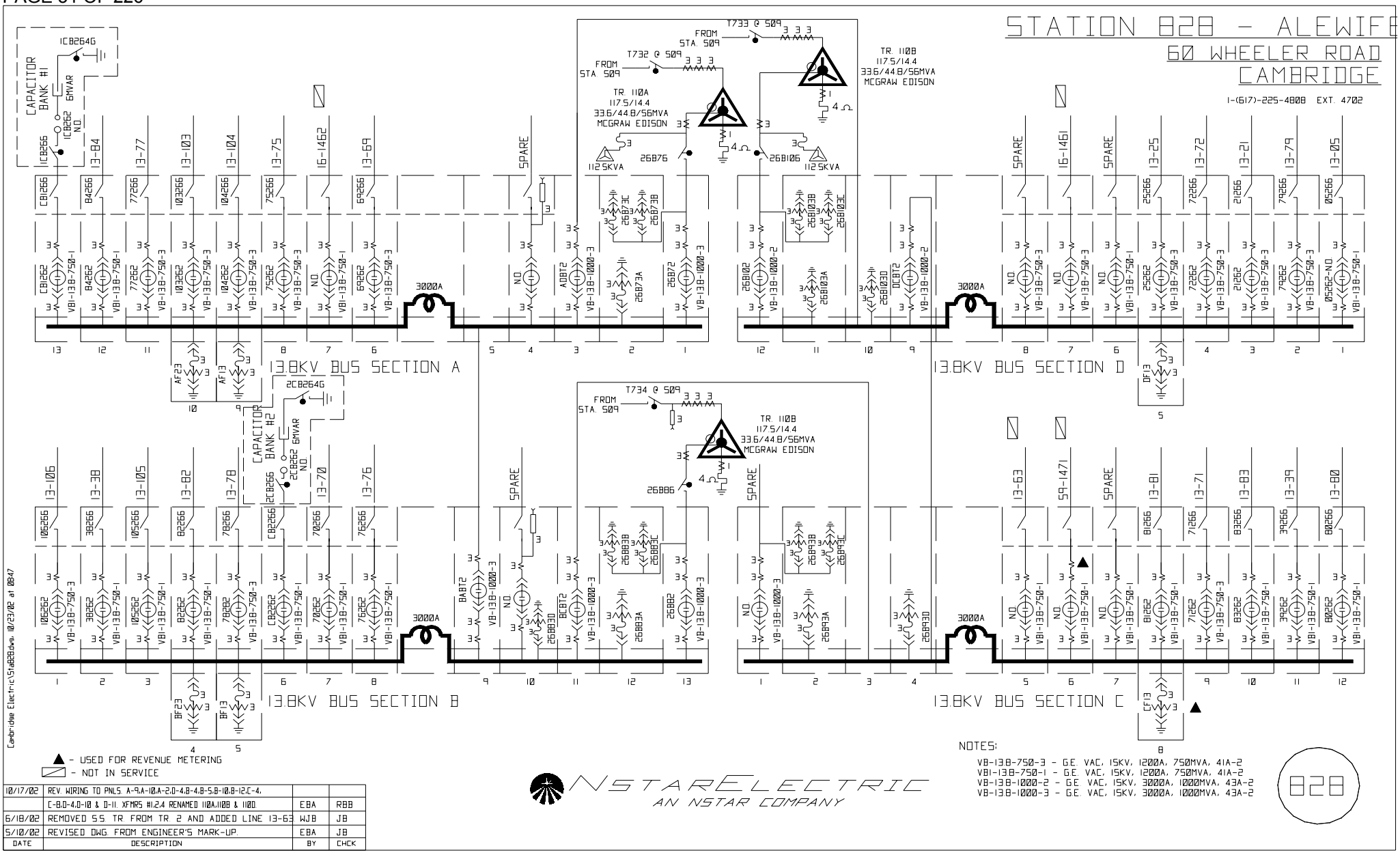

DATE	DESCRIPTION	BY	CHCK
10/17/02	REV. WIRING TO PNLS. A-9,A-10,A-2,D-4,B-4,B-5,B-10,B-12,C-4,		
	C-8,D-4,D-10 & D-11. XFMRS #1,2,4 RENAMED 110A,110B & 110D	EBA	RBB
6/18/02	REMOVED S.S. TR FROM TR 2 AND ADDED LINE 13-63	WJB	JB
5/10/02	REVISED DWG. FROM ENGINEER'S MARK-UP.	EBA	JB

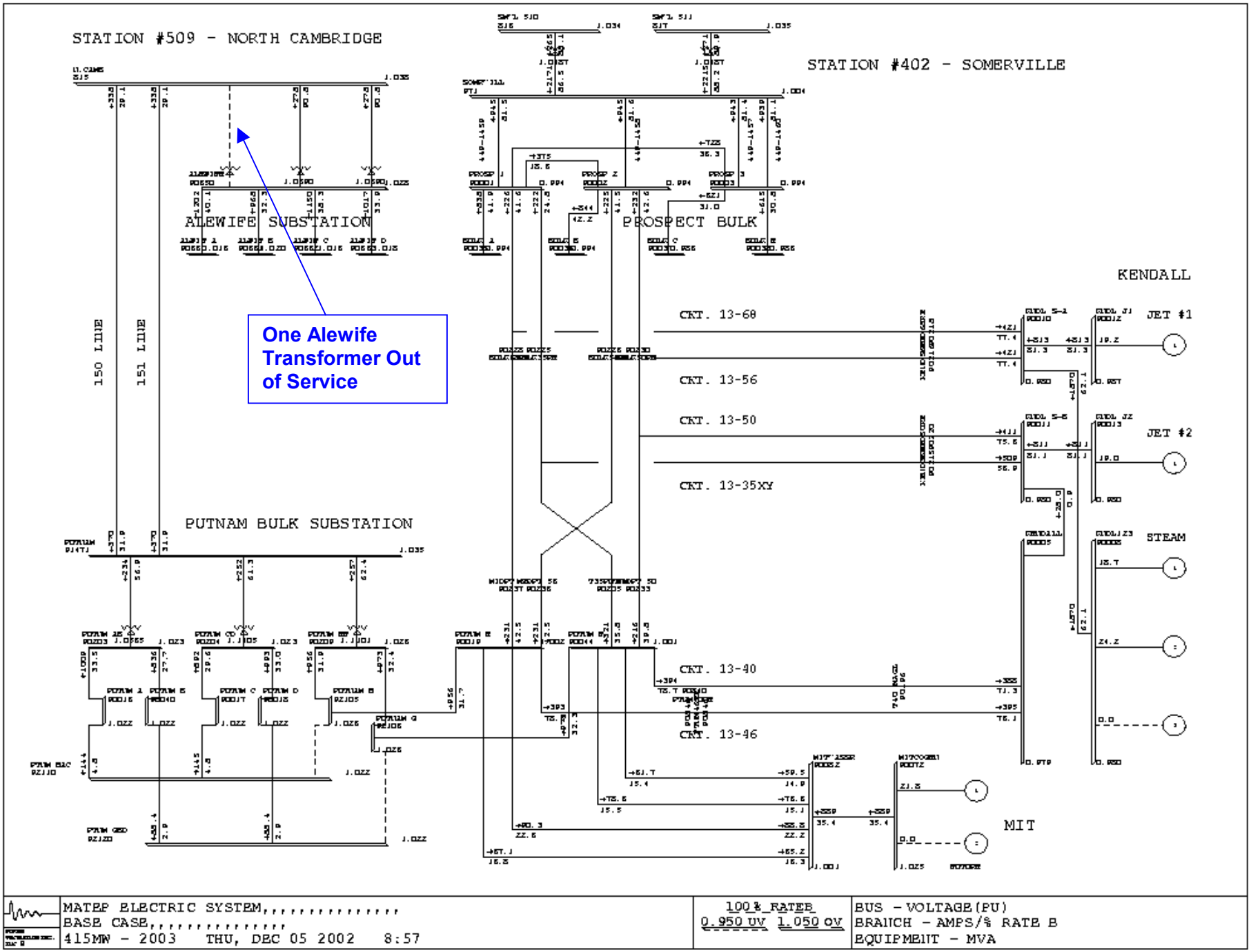
STATION #509 - NORTH CAMBRIDGE
STATION #402 - SOMERVILLE
ALEWIFE SUBSTATION
PROSPECT BULK
KENDALL
150 LINE
151 LINE
One Alewife Transformer Out of Service
CKT. 13-68
CKT. 13-56
CKT. 13-50
CKT. 13-35XY
JET #1
JET #2
STEAM
PUTNAM BULK SUBSTATION
CKT. 13-40
CKT. 13-46
MIT
MATEP ELECTRIC SYSTEM,,,,,,,,,,,,,,,
BASE CASE,,,,,,,,,,,,,,,,
415MW - 2003 THU, DEC 05 2002 8:57
100% RATEB
0.950 UV 1.050 OV
BUS - VOLTAGE(PU)
BRANCH - AMPS/% RATE B
EQUIPMENT - MVA

2003 T&D OPERATING STUDY
MASS. AVENUE DISTRICT

STATION #831 PUTNAM (CELCO)

Transformer A: General Electric 37.5/50/62.5 [70] MVA 117.5 / 14.4 kV
Transformer B: General Electric 37.5/50/62.5 [70] MVA 117.5 / 14.4 kV
Transformer C: General Electric 37.5/50/62.5 [70} MVA 117.5 / 14.4 kV

Overload Ratings:

Transformer	Nameplate	12 hour LTE, 90F Ambient	12 hour LTE, 110F Ambient
A	37.5/50/70 MVA	86 MVA	81 MVA
B	37.5/50/70 MVA	86 MVA	81 MVA
C	37.5/50/70 MVA	86 MVA	81 MVA

Station Capabilities:

Total Station Capacity (N)	Station Firm Capacity (LTE)	RADSEC Transfer	Manual Transfer	Total LCC
210 MVA	149 MVA	0 MVA	0 MVA	149 MVA

Switching Actions:

Loss of Transformer A:

Open: Circuit Breakers #1 and #2
13.8 kV Circuit Breakers 1AHT2 and 1BGT2
Disconnect Switch #115A
Close: Circuit Breakers #1 and #2
Transformers A and B normally operated in parallel, no 13.8kV tie breakers need to be closed
Close 13.8kV Tie Breakers EH3T2 to tie E bus to H bus and FG3T2 to tie F bus to G bus.

Loss of Transformer B:

Open: Circuit Breakers #2 and #3
13.8 kV Circuit Breakers 2CHT2 and 2DGT2
Disconnect Switch #115B
Close: Circuit Breakers #2 and #3
Transformers A and B normally operated in parallel, no 13.8kV tie breakers need to be closed
Close 13.8kV Tie Breakers EH3T2 to tie E bus to H bus and FG3T2 to tie F bus to G bus.

Loss of Transformer C:

Open: Circuit Breakers #4 and #5
13.8 kV Circuit Breakers 3EHT2 and 3FGT2
Disconnect Switch #115C
Close: Circuit Breakers #4 and #5
Close 13.8kV Tie Breakers EH3T2 to tie E bus to H bus and FG3T2 to tie F bus to G bus.

Results:

Loading - No heavy loading conditions were identified.

Voltage - No low voltage conditions were identified.

Additional Actions Required:

None

STATION 831 - PUTNAM

375 PUTNAM AVENUE - PHONE: 4503
CAMBRIDGE
PAGE 1

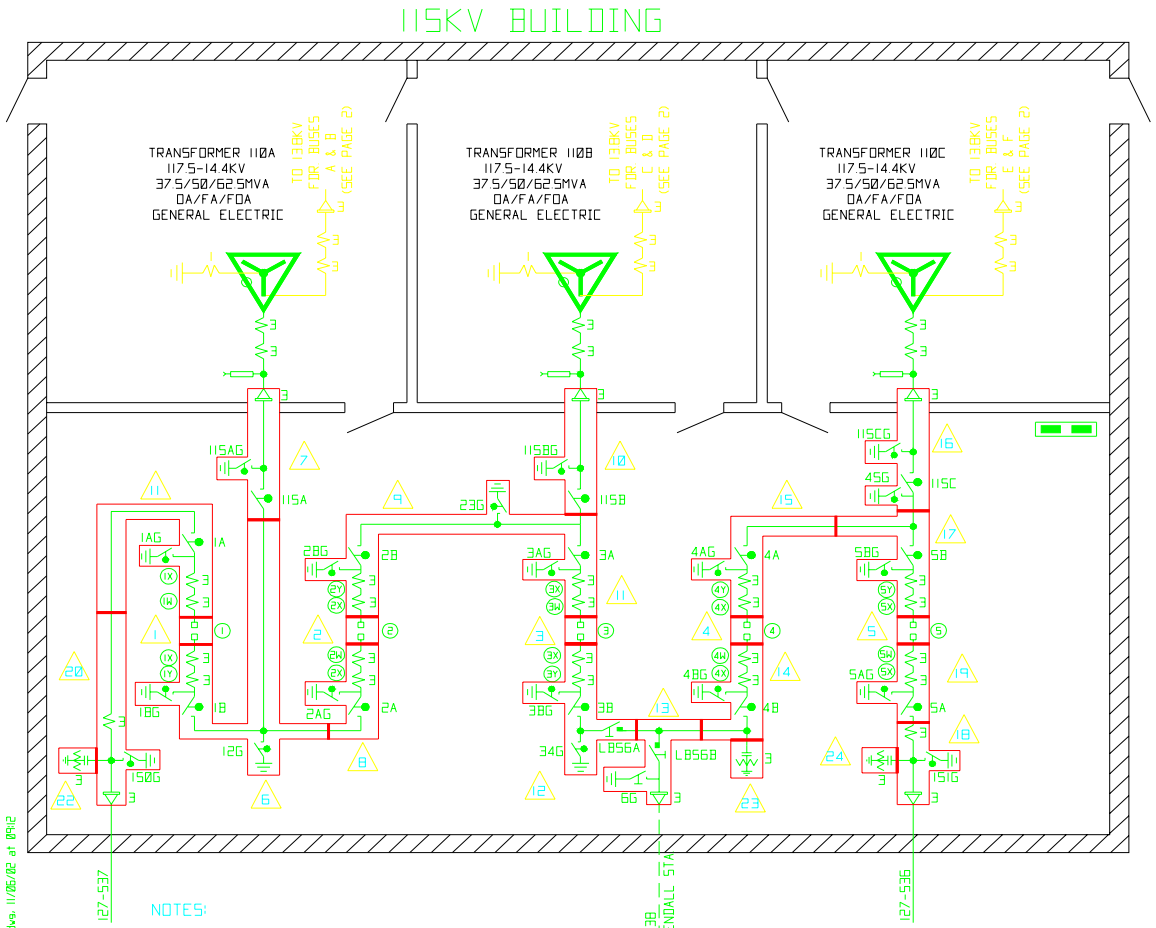

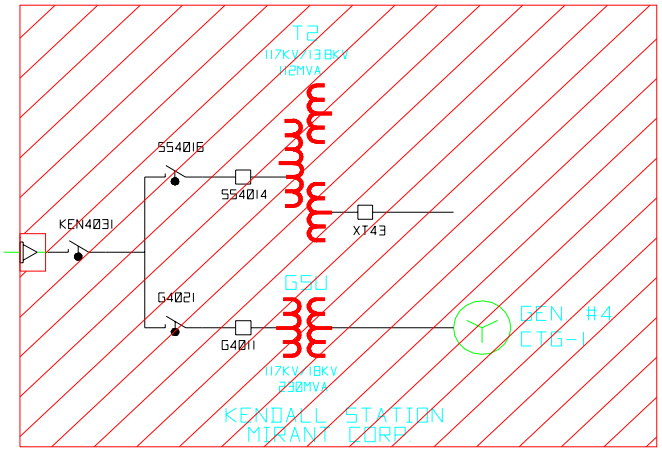

NOTES:

1. 115A, 115B & 115C DISCONNECTS ARE ELECTRONICALLY INTERLOCKED WITH ASSOCIATED BREAKER DISCONNECTS
2. LBS6A & 6B: SF6 LOAD BREAK SWITCH
3. ALL 115KV BREAKERS ARE ABB ELK-SL-03 - GAS, 2500A
4. TRANSFORMER 110A & 110B LTC OPERATE IN PARALLEL. TRANSFORMER 110C OPERATES INDEPENDENT

- GAS ZONES #'S

- MIRANT PROPERTY

DATE	DESCRIPTION	BY	CHCK
10/25/02	ADDED SF6 ENCASING AROUND DEVICES	EBA	RBB
4/10/02	REVISED DWG. FROM ENGINEER'S MARK-UPS.	EBA	PL
1/21/02	GROUND SWITCHING ADDED	EBA	RBB

NSTAR ELECTRIC
AN NSTAR COMPANY

831
Pg. 1

Cambridge Electric\Sta831\Fldwg, 11/05/02 at 09:12

STATION 831 - PUTNAM

375 PUTNAM AVENUE - PHONE: 4503
CAMBRIDGE
13.8KV BUILDING
PAGE 2

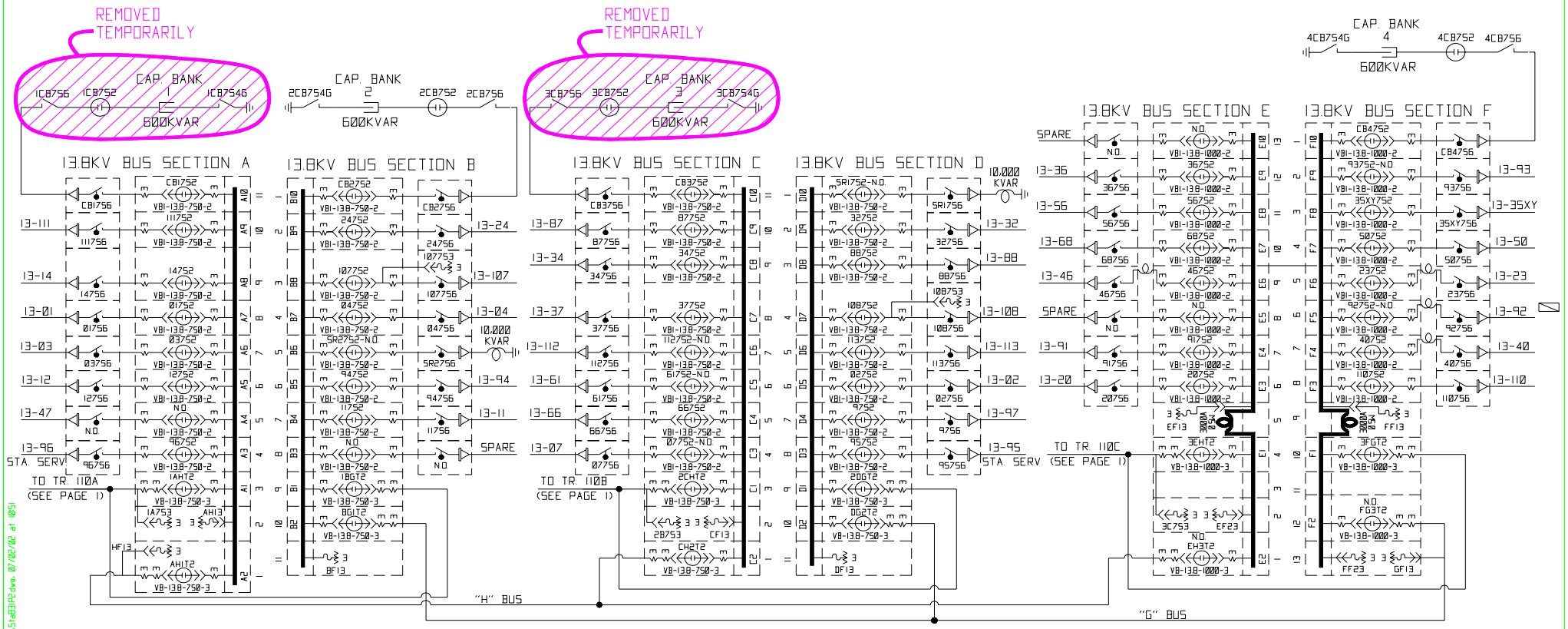

NOTES:

VBI-138-750-1 - G.E. VAC, 15KV, 1200A, 750MVA
VB-138-750 - G.E. VAC, 15KV, 1200A, 750MVA
VB-138-1000 - G.E. VAC, 15KV, 1200A, 1000MVA

1. THE CAPACITOR BANK BREAKERS 1CB752, 2CB752, 3CB752 & 4CB752 ARE INTERLOCKED WITH REACTOR BREAKERS 5R1752 & 5R2752 TO PREVENT CONCURRENT OPERATION.

▨ - NOT IN SERVICE

DATE	DESCRIPTION	BY	CHCK
7/2/02	REVISED PER ENGINEER'S MARK-UP.	EBA	RBB
6/18/02	ADDED LINE 13-47 TO SECTION A4	WJB	JB
5/10/02	REVISED DWG. FROM ENGINEER'S MARK-UP.	EBA	JB
7/2/01	APPROVED FOR USE	EBA	RBB

NSTAR ELECTRIC
AN NSTAR COMPANY

831
Pg. 2

Cambridge Electric\Sta831P2.dwg, 07/02/02 at 10:51

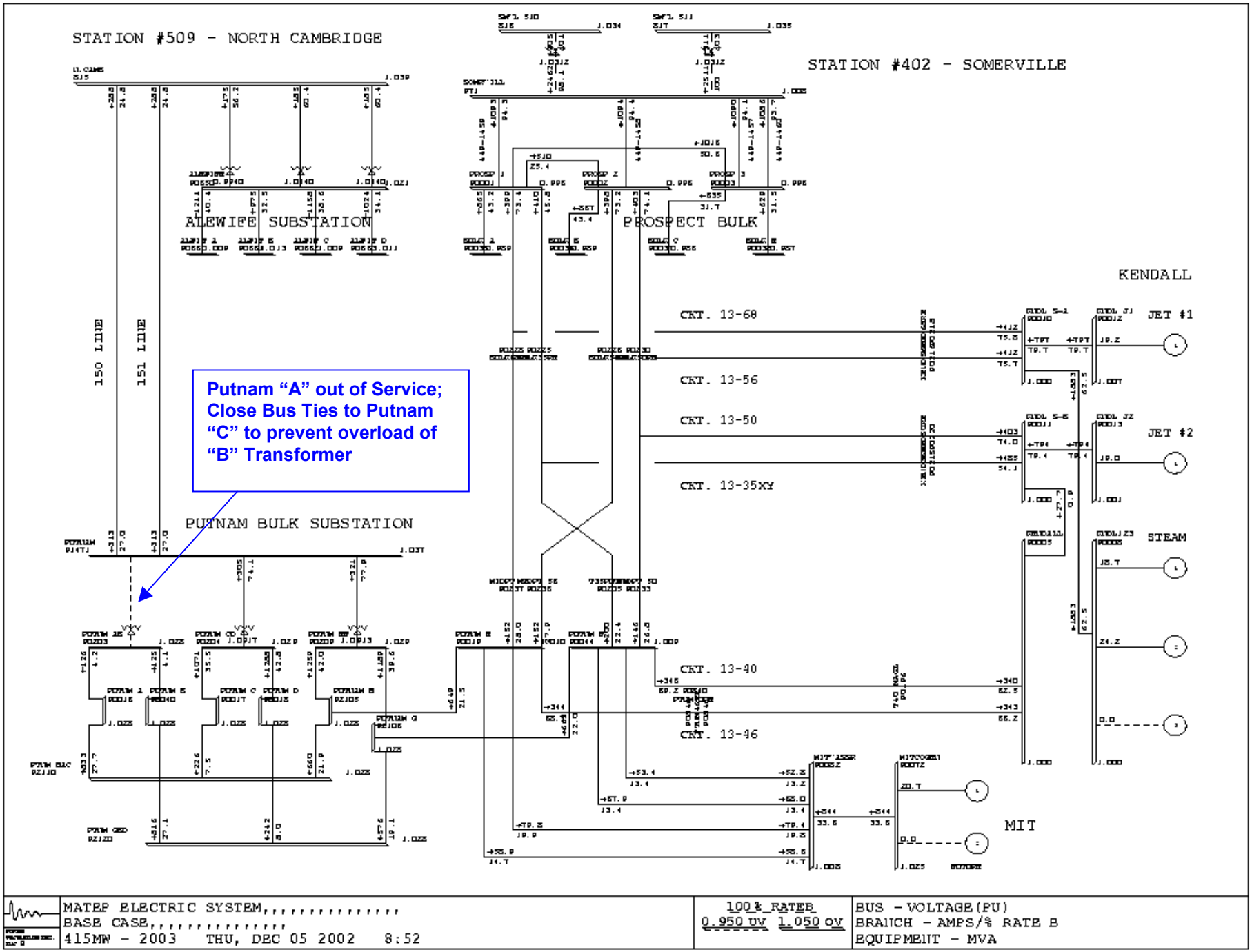
STATION #509 - NORTH CAMBRIDGE
STATION #402 - SOMERVILLE
ALEWIFE SUBSTATION
PROSPECT BULK
KENDALL
150 LINE
151 LINE
CKT. 13-68
CKT. 13-56
CKT. 13-50
CKT. 13-35XY
CKT. 13-40
CKT. 13-46
JET #1
JET #2
STEAM
MIT
Putnam "A" out of Service; Close Bus Ties to Putnam "C" to prevent overload of "B" Transformer
PUTNAM BULK SUBSTATION
MATEP ELECTRIC SYSTEM,,,,,,,,,,,,,,,
BASE CASE,,,,,,,,,,,,,,,,
415MW - 2003 THU, DEC 05 2002 8:52
100% RATEB
0.950 UV 1.050 OV
BUS - VOLTAGE(PU)
BRANCH - AMPS/% RATE B
EQUIPMENT - MVA

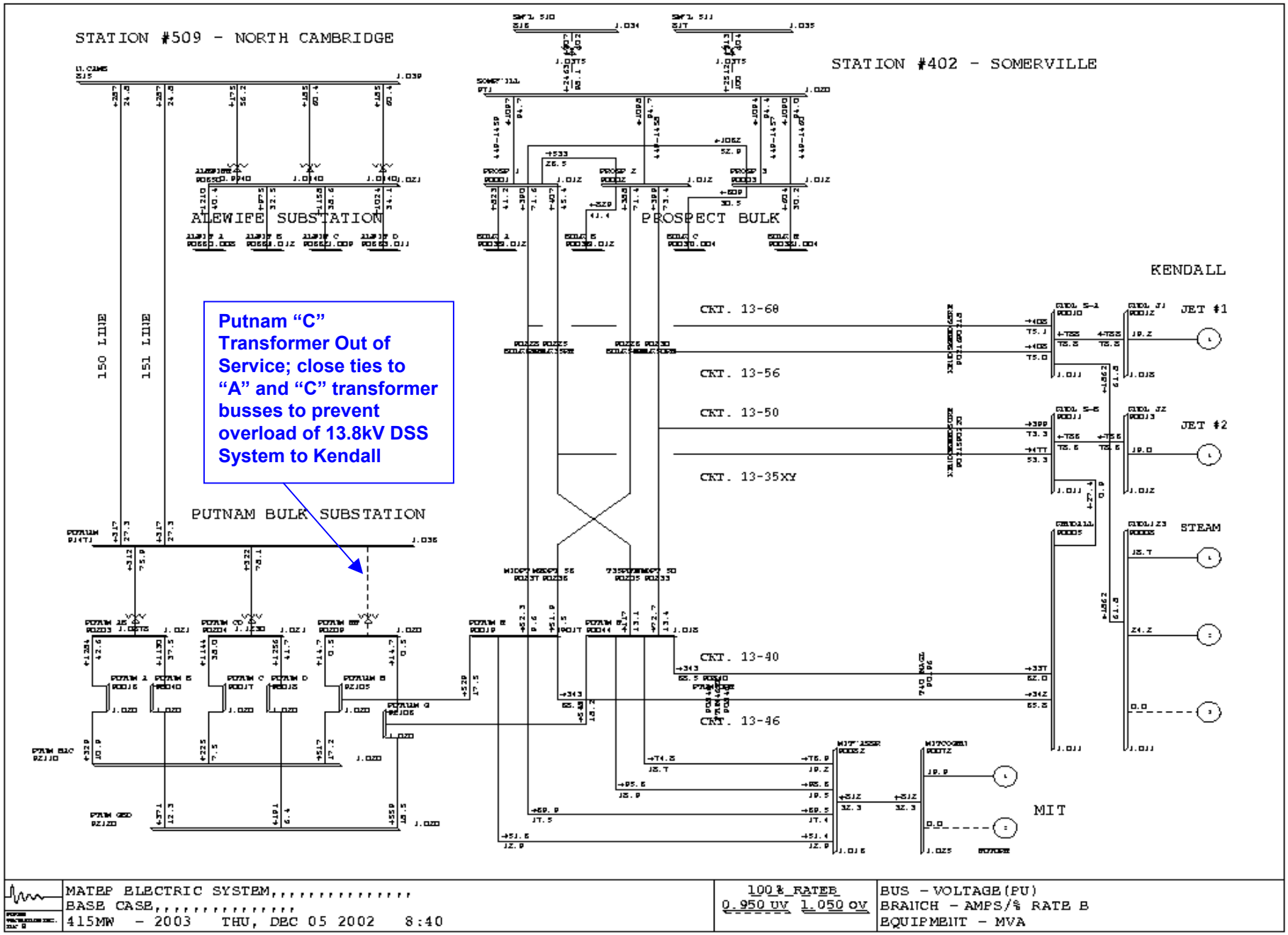
STATION #509 - NORTH CAMBRIDGE
STATION #402 - SOMERVILLE
ALEWIFE SUBSTATION
PROSPECT BULK
KENDALL
150 LINE
151 LINE
Putnam "C" Transformer Out of Service; close ties to "A" and "C" transformer busses to prevent overload of 13.8kV DSS System to Kendall
PUTNAM BULK SUBSTATION
CKT. 13-68
CKT. 13-56
CKT. 13-50
CKT. 13-35XY
CKT. 13-40
CKT. 13-46
JET #1
JET #2
STEAM
MIT
MATEP ELECTRIC SYSTEM,,,,,,,,,,,,,,,
BASE CASE,,,,,,,,,,,,,,,
415MW - 2003 THU, DEC 05 2002 8:40
100% RATEB
0.950 UV 1.050 OV
BUS - VOLTAGE(PU)
BRANCH - AMPS/% RATE B
EQUIPMENT - MVA

Framingham District

Bulk Substation Transformer Outages

Distribution Supply Line Outages

Thermal Results and Remedial Switching Actions

2003 T&D OPERATING STUDY
FRAMINGHAM DISTRICT

STATION #126 HOPKINTON

Transformer #110A: North American 24/32/40 MVA 117/14.4 kV
Transformer #110B: North American 24/32/40 MVA 117/14.4 kV

Overload Ratings:

Transformer	Nameplate	12 hour LTE, 90F Ambient	12 hour LTE, 110F Ambient
110A	24/32/40 MVA	47 MVA	43 MVA
110B	24/32/40 MVA	47 MVA	43 MVA

Station Capabilities:

Total Station Capacity (N)	Station Firm Capacity (LTE)	RADSEC Transfer	Manual Transfer	Total LCC
80 MVA	40 MVA*	17.4 MVA	0 MVA	57.4 MVA

*Based upon loss of 110A/126-502 or 110B/126-501.

Switching Actions:

Loss of Transformer #110A and 126-502 Line:

Open: GCB #2 @ Milford
Circuit Switcher CS770
Main 110A 13.8kV Secondary Circuit Breakers
Close: ABR Scheme Closes 13.8kV Bus Tie Breaker
Manually close GCB #2 @ Milford

Loss of Transformer #110B and 126-501 Line:

Open: GCB #1 @ Milford
Circuit Switcher CS771
Main 110B 13.8kV Secondary Circuit Breakers
Close: ABR Scheme Closes 13.8kV Bus Tie Breaker
Manually close GCB #1 @ Milford

For loss of either transformer, transfer of the following DSS lines via RADSEC switches would also be required:

Hopkinton 126-H3 to Medway 65-H6 via RADSEC MRU 457 for a transfer of 7.7 MVA
Hopkinton 126-H2 to Medway 65-H2 via RADSEC MRU 459 for a transfer of 3.8 MVA
Hopkinton 126-H4 to W. Framingham 455-H3 via RADSEC MRU 264 for a transfer of 5.9 MVA

Total Transfer: 17.4 MVA

Results:

Loading	-	For the load transfer of 126-H2 to 65-H-2 there may be some heavy loading conditions that may require the replacement of a voltage regulator on 65-H2.
Voltage	-	No Low Voltage conditions were identified.

Additional Actions Required:

None

STATION 126
226 SOUTH ST.
HOPKINTON
TEL# (617)-541-7948

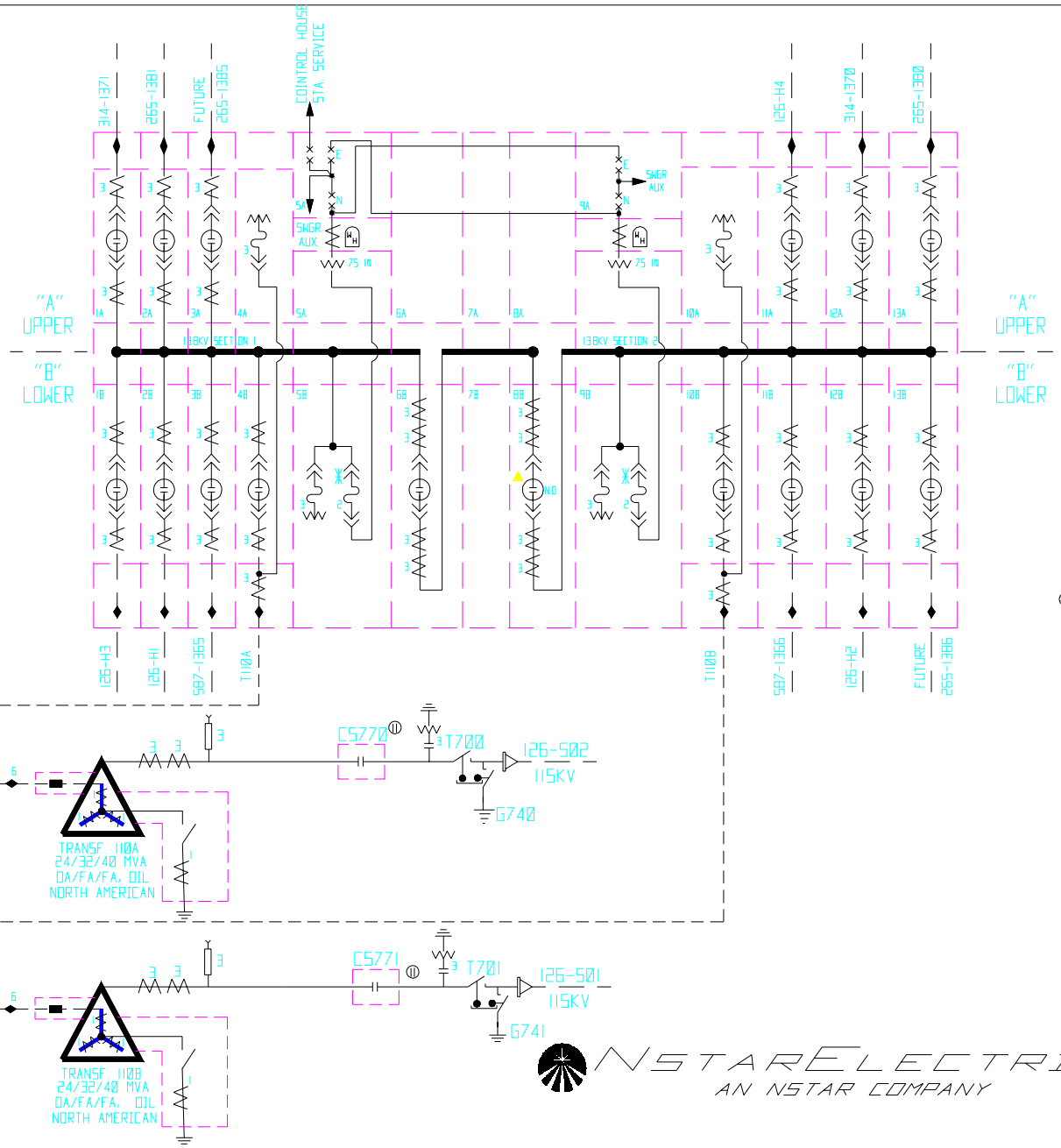

NOTES:

"TWO HIGH" SWITCHGEAR FEEDER CABLES FROM "A" UNIT PASS THROUGH THEIR OWN BARRIERED ENCLOSURE WITHIN THE "B" COMPARTMENT. ALL POWER CABLES ARE BOTTOM ENTRY.

▲ THE BREAKER IN UNIT 8 RUNS NORMALLY OPEN AND CLOSES ON LOSS OF 110A OR B OR IT'S 115KV LINE.

✳ THE CPT SECONDARY BREAKER MUST BE OPEN AND THE KEY RETRIEVED BEFORE THE ASSOCIATED FUSE DRAWER CAN BE OPENED.

⊖ - EQUIPPED WITH SHUNT TRIP DEVICE.

- ALL 13.8KV BREAKERS ARE GE TYPE VB 500MVA IC
- 120V BATTERY FOR INTEGRATION SYSTEM
- SCADA CONTROL IS VIA INTEGRATION SYSTEM

NSTAR ELECTRIC
AN NSTAR COMPANY

TEMPO

26

_STA_DIA\Stai26.dwg, 02/20/02 at 13:22

126-H2 to 65-H2 load transfer 65-H2 has a stepdown xfmr, and a regulator loaded toemergency load levels (102%, which is acceptable). 126-H2 has no violations.

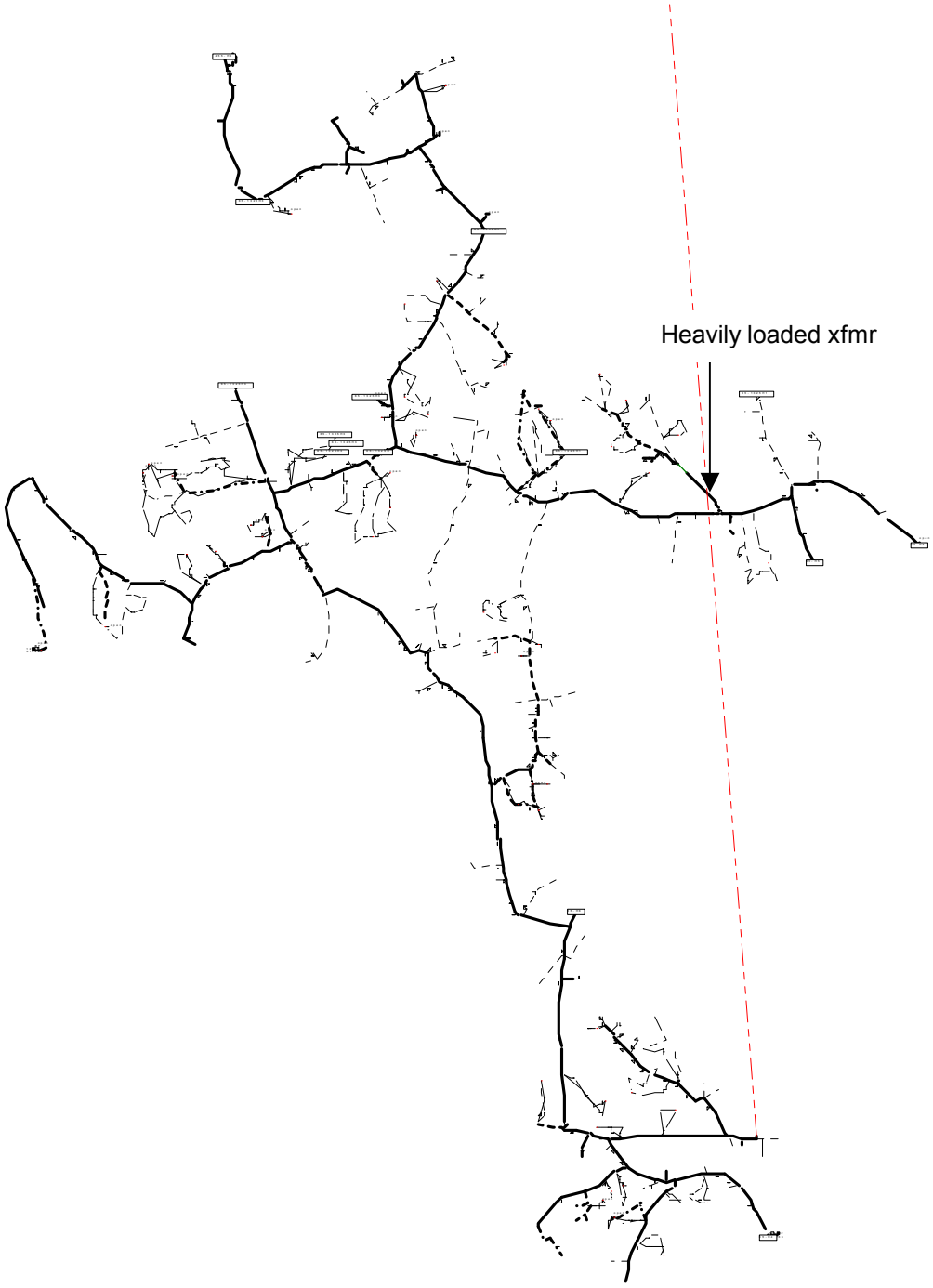

Voltage Drop Summary

Feeder	**65-H2**
Substation	STA65
Source Voltage	14.49 kVLL, 0.00 Deg.

Parameters

Analysis Type	Unbalanced Voltage Drop
Flag Levels	Summer, Nominal
Load Model	Nominal
Load Factor	1.00 x (kW) 1.00 x (kVAR)

Load Summary

	Total Load			
	kW	kVAR	kVA	PF(%)
Total load read (Non-adjusted)	10145.35	4793.8	11220.9	90.41
Total load used (Adjusted)	10091.34	4755.68	11155.79	90.46
Total shunt capacitor (Adjusted)		2641.95		
Total shunt reactor (Adjusted)		0		
Total load from motor	0	0	0	0
Total power from generator	0	0	0	0
Total power to other feeder(s) (Loop)	0	0	0	0
Total conductor capacitances		626.22		
Total losses	791.92	1294.17	1517.24	52.19
Total power from substation	10883.26	2781.69	11233.13	96.89

Voltage Drop Summary

Feeder	**126-H2**
Substation	STA126
Source Voltage	14.28 kVLL, 0.00 Deg.

Parameters

Analysis Type	Unbalanced Voltage Drop
Flag Levels	Summer, Nominal
Load Model	Nominal
Load Factor	1.00 x (kW) 1.00 x (kVAR)

Load Summary

	Total Load			
	kW	kVAR	kVA	PF(%)
Total load read (Non-adjusted)	0	0	0	0
Total load used (Adjusted)	0	0	0	0
Total shunt capacitor (Adjusted)		0		
Total shunt reactor (Adjusted)		0		
Total load from motor	0	0	0	0
Total power from generator	0	0	0	0
Total power to other feeder(s) (Loop)	0	0	0	0
Total conductor capacitances		5.99		
Total losses	0	0	0	0
Total power from substation	0	-5.99	5.99	0

Feeder Id	Section Id	Equipment Id	Code	Phase	VA	VB	VC	VA (kVLN)	VB (kVLN)	VC (kVLN)	IA (Amps)	IB (Amps)	IC (Amps)	Loading A (%)	Loading B (%)	Loading C (%)	Thru Power A (kW)	Thru Power B (kW)	Thru Power C (kW)	Thru Power A (kVAR)	Thru Power B (kVAR)	Thru Power C (kVAR)
65-H2	1101130-326	RGX250_13.8	REG	ABC	124.4	125.5	124.4	8.3	8.3	8.3	369.1	328.9	365.9	112.5	100.3	111.5	2879	2602	2882	673.9	545.3	532
65-H2	1101200-915	SDX167_13.8_4	XFO	ABC	119.7	119.7	120.7	2.4	2.4	2.4	28.2	29.8	29.3	101.2	109.5	114.2	186.1	198.4	189.2	112.6	119.7	124.2

126-H3 to 65-H6 Emergency load transfer
No violations on 126-H3; one heavily loaded transformer on 65-H6 and some conductors on 65-H6 are loaded to emergency load levels (acceptable % overload).

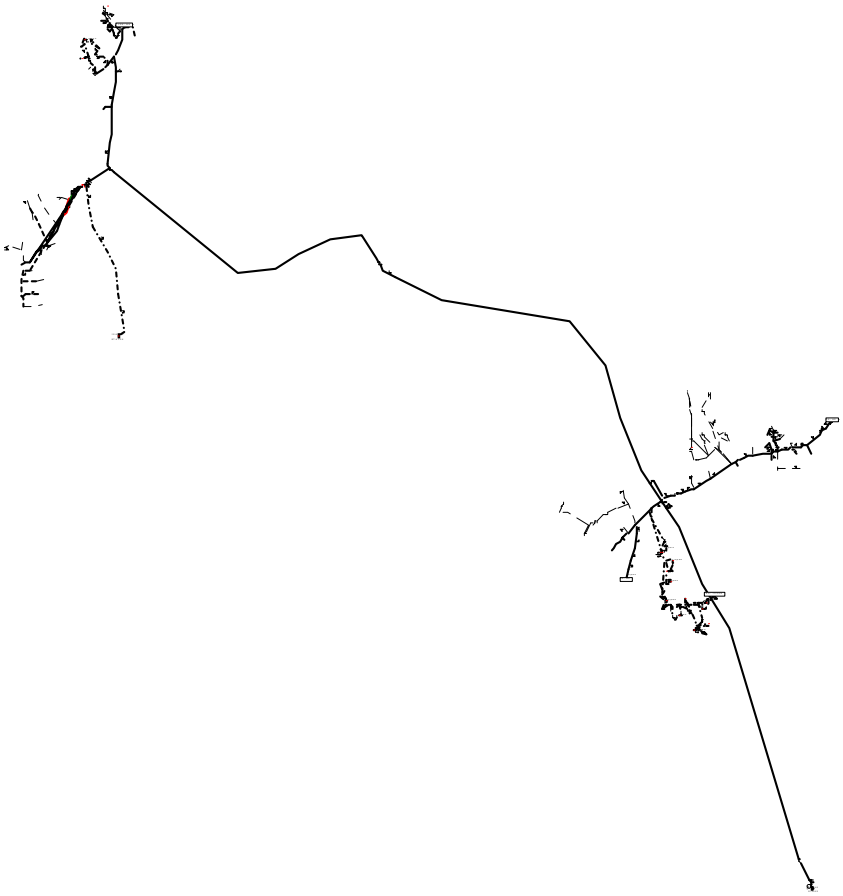

Voltage Drop Summary

Feeder	**65-H6**
Substation	STA65
Source Voltage	14.49 kVLL, 0.00 Deg.

Parameters

Analysis Type	Unbalanced Voltage Drop
Flag Levels	Summer, Nominal
Load Model	Nominal
Load Factor	1.00 x (kW) 1.00 x (kVAR)

Load Summary

	Total Load			
	kW	kVAR	kVA	PF(%)
Total load read (Non-adjusted)	6451.79	3350.56	7269.93	88.75
Total load used (Adjusted)	6561.69	3419.32	7399.15	88.68
Total shunt capacitor (Adjusted)		2835.52		
Total shunt reactor (Adjusted)		0		
Total load from motor	0	0	0	0
Total power from generator	0	0	0	0
Total power to other feeder(s) (Loop)	0	0	0	0
Total conductor capacitances		507.27		
Total losses	317.95	551.67	636.74	49.93
Total power from substation	6879.64	628.2	6908.26	99.59

Voltage Drop Summary

Feeder	**126-H3**
Substation	STA126
Source Voltage	14.28 kVLL, 0.00 Deg.

Parameters

Analysis Type	Unbalanced Voltage Drop
Flag Levels	Summer, Nominal
Load Model	Nominal
Load Factor	1.00 x (kW) 1.00 x (kVAR)

Load Summary

	Total Load			
	kW	kVAR	kVA	PF(%)
Total load read (Non-adjusted)	0	0	0	0
Total load used (Adjusted)	0	0	0	0
Total shunt capacitor (Adjusted)		0		
Total shunt reactor (Adjusted)		0		
Total load from motor	0	0	0	0
Total power from generator	0	0	0	0
Total power to other feeder(s) (Loop)	0	0	0	0
Total conductor capacitances		6.66		
Total losses	0	0	0	0
Total power from substation	0	-6.66	6.66	0

Feeder Id	Section Id	Equipment Id	Code	Phase	VA	VB	VC	VA (kVLN)	VB (kVLN)	VC (kVLN)	IA (Amps)	IB (Amps)	IC (Amps)	Loading A (%)	Loading B (%)	Loading C (%)	Thru Power A (kW)	Thru Power B (kW)	Thru Power C (kW)	Thru Power A (kVAR)	Thru Power B (kVAR)	Thru Power C (kVAR)
65-H6	1101193-66	3-2_AL	COND	ABC	125.3	124.7	125.6	2.5	2.5	2.5	132.1	138.4	135.9	101.6	106.5	104.5	324.4	339	332.8	71.3	72	81.6
65-H6	1101193-67	3-2_AL	COND	ABC	124.4	123.8	124.7	2.5	2.5	2.5	132.1	138.4	135.9	101.6	106.5	104.5	323.4	337.9	331.8	70.9	71.5	81.3
65-H6	1101193-78	3-2_AL	COND	ABC	124.2	123.6	124.5	2.5	2.5	2.5	117	138.4	135.9	90	106.5	104.5	284.7	335.5	329.5	62	70.5	80.4

126-H4 to 455-H3 load transfer
Heavily loaded regulator on 455-H3; 6 heavily loaded sections on 455-H3. 126-H4 has no violations.

Voltage Drop Summary

Feeder	**455-H3**
Substation	STA455
Source Voltage	14.28 kVLL, 0.00 Deg.

Parameters

Analysis Type	Unbalanced Voltage Drop
Flag Levels	Summer, Nominal
Load Model	Nominal
Load Factor	1.00 x (kW) 1.00 x (kVAR)

Load Summary

	Total Load			
	kW	kVAR	kVA	PF(%)
Total load read (Non-adjusted)	11710.37	5279.68	12845.53	91.16
Total load used (Adjusted)	11836.9	5336.68	12984.31	91.16
Total shunt capacitor (Adjusted)		2815.64		
Total shunt reactor (Adjusted)		0		
Total load from motor	0	0	0	0
Total power from generator	0	0	0	0
Total power to other feeder(s) (Loop)	0	0	0	0
Total conductor capacitances		679.51		
Total losses	635.31	1017.59	1199.62	52.96
Total power from substation	12472.21	2859.13	12795.72	97.47

Voltage Drop Summary

Feeder	**126-H4**
Substation	STA126
Source Voltage	14.28 kVLL, 0.00 Deg.

Parameters

Analysis Type	Unbalanced Voltage Drop
Flag Levels	Summer, Nominal
Load Model	Nominal
Load Factor	1.00 x (kW) 1.00 x (kVAR)

Load Summary

	Total Load			
	kW	kVAR	kVA	PF(%)
Total load read (Non-adjusted)	0	0	0	0
Total load used (Adjusted)	0	0	0	0
Total shunt capacitor (Adjusted)		0		
Total shunt reactor (Adjusted)		0		
Total load from motor	0	0	0	0
Total power from generator	0	0	0	0
Total power to other feeder(s) (Loop)	0	0	0	0
Total conductor capacitances		8.86		
Total losses	0	0	0	0
Total power from substation	0	-8.86	8.86	0

Feeder Id	Section Id	Equipment Id	Code	Phase	VA	VB	VC	VA (kVLN)	VB (kVLN)	VC (kVLN)	IA (Amps)	IB (Amps)	IC (Amps)	Loading A (%)	Loading B (%)	Loading C (%)	Thru Power A (kW)	Thru Power B (kW)	Thru Power C (kW)	Thru Power A (kVAR)	Thru Power B (kVAR)	Thru Power C (kVAR)
455-H3	1100854-4	3-336_ACSR	COND	ABC	124.1	124.1	124.1	8.2	8.2	8.2	507.9	529.6	514.7	103.6	108.1	105	4081	4258	4129	929.5	958.3	970.6
455-H3	1100854-3	3-336_ACSR	COND	ABC	124.1	124.1	124.1	8.2	8.2	8.2	507.9	529.6	514.7	103.6	108.1	105	4081	4257	4129	928.8	957.5	969.8
455-H3	1100854-2	3-336_ACSR	COND	ABC	123.9	123.9	123.9	8.2	8.2	8.2	507.9	529.6	514.7	103.6	108.1	105	4080	4257	4128	928.1	956.6	969
455-H3	1100854-5	3-336_ACSR	COND	ABC	123.9	123.9	123.9	8.2	8.2	8.2	504.7	525.2	511.8	103	107.2	104.5	4051	4219	4103	911.7	935.5	952.5
455-H3	1100854-29	3-336_ACSR	COND	ABC	123.8	123.8	123.8	8.2	8.2	8.2	504.7	525.2	511.8	103	107.2	104.5	4050	4217	4101	909.6	933.1	950.3
455-H3	1100854-42	3-336_ACSR	COND	ABC	123.7	123.7	123.7	8.2	8.2	8.2	501.5	520.8	509	102.3	106.3	103.9	4023	4181	4077	895.5	914.6	936.2

2003 T&D OPERATING STUDY
FRAMINGHAM DISTRICT

STATION #240 FRAMINGHAM

Transformer #110A: Westinghouse 24/32 MVA 115/13.8 kV
Transformer #110C: Westinghouse 24/32 MVA 115/13.8 kV

Overload Ratings:

Transformer	Nameplate	12 hour LTE, 90F Ambient	12 hour LTE, 110F Ambient
110A	24/32 MVA	47 MVA	42 MVA
110C	24/32 MVA	47 MVA	42 MVA

Station Capabilities:

Total Station Capacity (N)	Station Firm Capacity (LTE)	RADSEC Transfer	Manual Transfer	Total LCC
64 MVA	58 MVA (A)	13.1 MVA	15.3 MVA	86.4 MVA

(A) Firm Capacity includes the dispatch of 2-14 kV Sithe Framingham generators at 10 MVA each.

Switching Actions:

Loss of Transformer #110A:

Open: Circuit Breakers #1, #4, and #7 in 115kV Ring
Disconnect Switch #T730
Main 110A 13.8kV Secondary Circuit Breaker
Close: 13.8kV Bus Ties Normally Closed
Manually close OCB's #1, #4, and #7 in 115kV Ring

Loss of Transformer #110C:

Open: Circuit Breakers #8 and #9 in 115kV Ring
Disconnect Switch #731
Main 110C 13.8kv Secondary Circuit Breaker
Close: 13.8kV Bus Ties Normally Closed
Manually close OCB's #8 and #9 in 115kV Ring

For loss of either transformer, transfer of the following DSS lines via RADSEC switches may also be required:

Framingham 240-H2 to Speen St 433-H12 via manual switch on P1008/69B1-2 and Station Breaker 240-H2 for a peak transfer of 6.6 MVA.
Framingham 240-H3 to West Framingham 455-H5 via manual switch on P244/75 and RADSEC switch on P479/16 for a peak transfer of 2.4 MVA.
Framingham 240-H3 to Speen St 433-H8 via RADSEC switches on P53/79 and P53/51 for a peak transfer of 3.0 MVA.
Framingham 240-H3 to Speen St 433-H12 (via 240-H2) via RADSEC switch on P274/11 and Station Breaker 240-H3 for a peak transfer of 10.1 MVA.
Framingham 240-H4 to Sherborn 519-75H via manual switch on P347/0 and Station Breaker 240-H4 for a peak transfer of 4.5 MVA.
Framingham 23-H1 to Speen St 433-H5 via manual switches on P137/32 and P206/22 for a peak transfer of 0.7 MVA.
Framingham 23-H1 to Speen St 433-H7 via manual switch on P206/56 and RADSEC switch on P19/42 for a peak transfer of 1.1 MVA.

Total Transfers: 28.4 MVA

Results:

Loading

For the load transfer of 240-H4 to 519-75H there may be heavy loading conditions in the 500 kcmil station getaway of 519-75H. This loading condition may require an upgrade/reconductoring of the conductor.

For the load transfer of 240-H3 to 455-H5 there may be heavy loading conditions in the 800 kcmil station getaway of 455-H5, but is within applicable emergency limits. In addition some of the overhead #4 copper primary conductors on circuit 240-H3 may be heavily loaded and may require an upgrade/reconductoring of the conductor.

For the load transfer of 240-H3 to 433-H8 there may be heavy loading conditions in 336 ACSR conductor on circuit 433-H8, but within applicable emergency ratings. In addition some of the overhead #4 copper conductor on circuit 240-H3 may be heavily loaded and may require an upgrade/reconductoring of the conductor.

For the load transfer of 240-H3 to 433-H12 via the 240-H2 circuit, there may be heavy loading conditions on portions of the 433-H12; including the 500 kcmil station getaway, #2 copper, 1/0 Aluminum, 2/0 Aluminum, and #4 Copper overhead primary. These heavy loading conditions may require an upgrade/reconductoring of the conductor.

For the load transfer of 240-H2 to 433-H12, there may be heavy loading conditions in 2/0 and 1/0 Aluminum primary conductors and may

require an upgrade/reconductoring.

Voltage - For the load transfer of 240-H3 to 433-H12 via 240-H2 may result in load voltages conditions on “A” and “C” phases of some laterals; the voltages are within ANSI “B”.

Additional Actions Required:

None.

M-COLOR

STATION 240

LELAND STREET
FRAMINGHAM
FRAMINGHAM RING

TEL#(508) 370-4892
TEL#(508) 370-4870

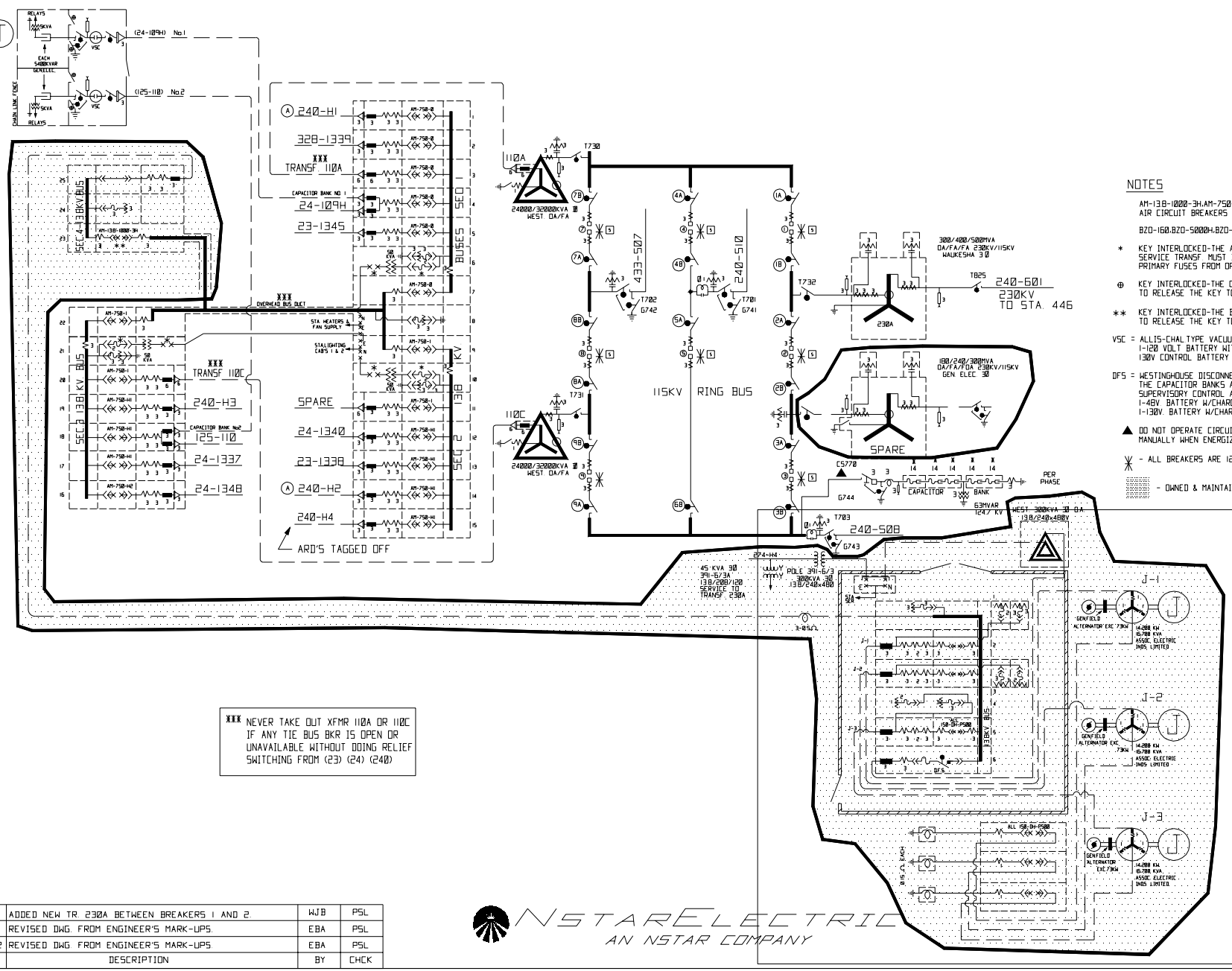

NOTES

AM-138-1000-3H,AM-750-0,AM-750-1,AM-750-H1=GEN.ELEC. TYPE AIR CIRCUIT BREAKERS

BZO-160,BZO-5000H,BZO-5000-2=ALLIS-CHAL.TYPE OIL CIRCUIT BREAKERS.

* KEY INTERLOCKED-THE AIR CIRCUIT BREAKER ON THE SEC. SIDE OF THE STA. SERVICE TRANSF. MUST BE OPEN TO RELEASE THE KEY TO WITHDRAW THE PRIMARY FUSES FROM OPERATING POSITION

⊕ KEY INTERLOCKED-THE CAPACITOR GROUNDING DISCONNECTS MUST BE CLOSED TO RELEASE THE KEY TO OPEN ITS RESPECTIVE UNIT ACCESS GATE

** KEY INTERLOCKED-THE BUS TIE BREAKER MUST BE OPENED AND LOWERED TO RELEASE THE KEY TO PERMIT LOWERING OF THE DUMMY BREAKER

VSC = ALLIS-CHAL.TYPE VACUUM BREAKERS
1-120 VOLT BATTERY WITH CHARGING SET
130V CONTROL BATTERY (JET GENERATORS)

DFS = WESTINGHOUSE DISCONNECT SWITCH AND FUSE
THE CAPACITOR BANKS ARE REMOTE CONTROLLED FROM STA. 24
SUPERVISORY CONTROL AND INDICATION TO STA. 24
1-48V. BATTERY W/CHARGER,JET ALARMS & SIGNALS.
1-130V. BATTERY W/CHARGER, CONTROL & JETS.

▲ DO NOT OPERATE CIRCUIT SWITCHER MANUALLY WHEN ENERGIZED.

- ALL BREAKERS ARE 121PMI, SF6-ABB, 3000A, 63KA

- OWNED & MAINTAINED BY SITHE

*** NEVER TAKE OUT XFMR 110A OR 110C IF ANY TIE BUS BKR IS OPEN OR UNAVAILABLE WITHOUT DOING RELIEF SWITCHING FROM (23) (24) (240)

DATE	DESCRIPTION	BY	CHCK
6/6/02	ADDED NEW TR. 230A BETWEEN BREAKERS 1 AND 2.	WJB	PSL
4/18/02	REVISED DWG. FROM ENGINEER'S MARK-UPS.	EBA	PSL
3/20/02	REVISED DWG. FROM ENGINEER'S MARK-UPS.	EBA	PSL

NSTAR ELECTRIC
AN NSTAR COMPANY

240

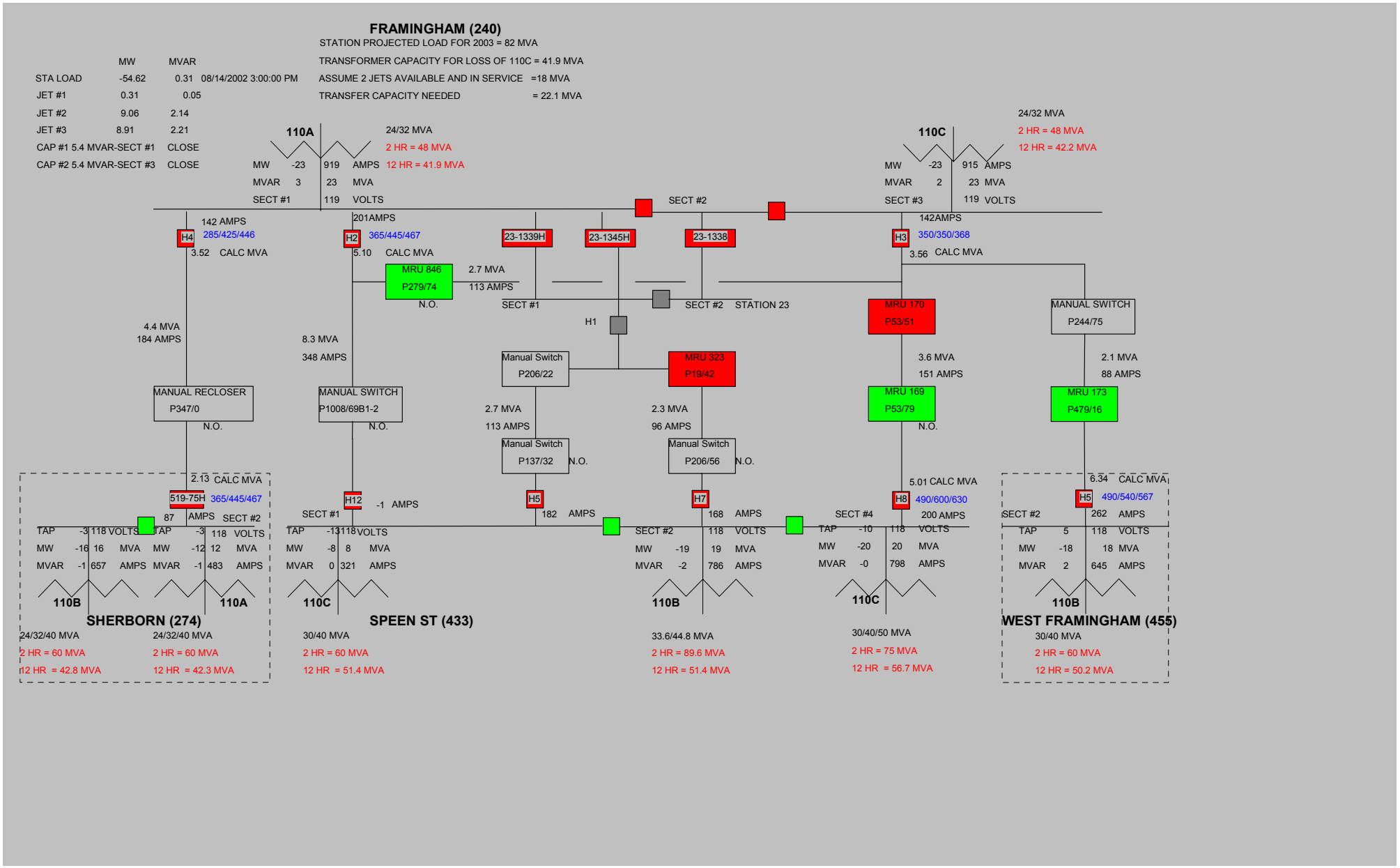
FRAMINGHAM (240)
STATION PROJECTED LOAD FOR 2003 = 82 MVA
TRANSFORMER CAPACITY FOR LOSS OF 110C = 41.9 MVA
ASSUME 2 JETS AVAILABLE AND IN SERVICE =18 MVA
TRANSFER CAPACITY NEEDED = 22.1 MVA
MW MVAR
STA LOAD -54.62 0.31 08/14/2002 3:00:00 PM
JET #1 0.31 0.05
JET #2 9.06 2.14
JET #3 8.91 2.21
CAP #1 5.4 MVAR-SECT #1 CLOSE
CAP #2 5.4 MVAR-SECT #3 CLOSE
110A
24/32 MVA
2 HR = 48 MVA
12 HR = 41.9 MVA
MW -23 919 AMPS
MVAR 3 23 MVA
SECT #1 119 VOLTS
110C
24/32 MVA
2 HR = 48 MVA
12 HR = 42.2 MVA
MW -23 915 AMPS
MVAR 2 23 MVA
SECT #3 119 VOLTS
SECT #2
142 AMPS
H4 285/425/446
3.52 CALC MVA
201AMPS
H2 365/445/467
5.10 CALC MVA
23-1339H
23-1345H
23-1338
142AMPS
H3 350/350/368
3.56 CALC MVA
MRU 846
P279/74
N.O.
2.7 MVA
113 AMPS
SECT #1
SECT #2 STATION 23
H1
MRU 170
P53/51
MANUAL SWITCH
P244/75
4.4 MVA
184 AMPS
8.3 MVA
348 AMPS
Manual Switch
P206/22
MRU 323
P19/42
3.6 MVA
151 AMPS
2.1 MVA
88 AMPS
MANUAL RECLOSER
P347/0
N.O.
MANUAL SWITCH
P1008/69B1-2
N.O.
2.7 MVA
113 AMPS
2.3 MVA
96 AMPS
MRU 169
P53/79
N.O.
MRU 173
P479/16
Manual Switch
P137/32
N.O.
Manual Switch
P206/56
N.O.
2.13 CALC MVA
519-75H 365/445/467
87 AMPS SECT #2
TAP -3 118 VOLTS
MW -16 16 MVA
MVAR -1 657 AMPS
TAP -3 118 VOLTS
MW -12 12 MVA
MVAR -1 483 AMPS
110B
110A
SHERBORN (274)
24/32/40 MVA
2 HR = 60 MVA
12 HR = 42.8 MVA
24/32/40 MVA
2 HR = 60 MVA
12 HR = 42.3 MVA
H12 -1 AMPS
SECT #1
TAP -13 118 VOLTS
MW -8 8 MVA
MVAR 0 321 AMPS
110C
SPEEN ST (433)
30/40 MVA
2 HR = 60 MVA
12 HR = 51.4 MVA
H5 182 AMPS
H7 168 AMPS
SECT #2 118 VOLTS
MW -19 19 MVA
MVAR -2 786 AMPS
110B
33.6/44.8 MVA
2 HR = 89.6 MVA
12 HR = 51.4 MVA
5.01 CALC MVA
H8 490/600/630
SECT #4 200 AMPS
TAP -10 118 VOLTS
MW -20 20 MVA
MVAR -0 798 AMPS
110C
30/40/50 MVA
2 HR = 75 MVA
12 HR = 56.7 MVA
6.34 CALC MVA
H5 490/540/567
SECT #2 262 AMPS
TAP 5 118 VOLTS
MW -18 18 MVA
MVAR 2 645 AMPS
110B
WEST FRAMINGHAM (455)
30/40 MVA
2 HR = 60 MVA
12 HR = 50.2 MVA

2003 T&D OPERATING STUDY
FRAMINGHAM DISTRICT

STATION #274 SHERBORN

Transformer #110A: Cooper Power Systems 24/32/40 MVA 115/14.4 kV
Transformer #110B Cooper Power Systems 24/32/40 MVA 115/14.4 kV

Overload Ratings:

Transformer	Nameplate	12 hour LTE, 90F Ambient	12 hour LTE, 110F Ambient
110A	24/32/40 MVA	49 MVA	44 MVA
110B	24/32/40 MVA	49 MVA	45 MVA

Station Capabilities:

Total Station Capacity (N)	Station Firm Capacity (LTE)	RADSEC Transfer	Manual Transfer	Total LCC
80 MVA	41 MVA*	15.1 MVA	4.9 MVA	61 MVA

* Based upon loss of 110B/240-508 Line.

Switching Actions:

Loss of Transformer #110A and 274-509 Line:

Open: OCB's 7 & 8 @ Medway
OCB #1
Circuit Switcher #CS773
Main 110A 13.8kV Secondary Circuit Breaker
Close: Manually close 13.8kV Bus Tie Breaker
Manually close OCB #1
Manually close OCB's 7 & 8 @ Medway

Loss of Transformer #110B and 240-508 Line:

Open: OCB's 3, 5 & 9 @ Framingham
OCB #2
Circuit Switcher #CS772
Main 110B 13.8kV Secondary Circuit Breaker
Close: Manually close 13.8kV Bus Tie Breaker
Manually close OCB #2
Manually close OCB's 3, 5 & 9 @ Framingham

For loss of either transformer, transfer of the following DSS lines via RADSEC and/or manual switches may also be required:

Sherborn 274-H2 to Medway 65-H3 via RADSEC switch on P76/13 and manual switch on P36/54 for a peak transfer of 0.6 MVA.
Framingham 240-H2 to Speen St 433-H12 via manual switches on P1008/69B1-2 and P1008/40B for a peak transfer of 8.3 MVA. This load is not removed from Sherborn, however it creates capability for transfers below.
Sherborn 274-H4 to Speen St 433-H12 (via 240-H2) via manual switches on P227/27 and P14/34 for a peak transfer of 9.7 MVA.
Sherborn 274-H4 to Framingham 240-H1 via RADSEC switches on P31/13 and P15/22 for a peak transfer of 5.4 MVA
Sherborn 65-1325H1 to Hopkinton 126-H2 via manual switch on P36/32 and RADSEC switch on P6/32 for a peak transfer of 2.9 MVA.
Sherborn 65-1325H6 to West Framingham 455-H3 via manual switch on P3/32 and RADSEC switch on P26/26 for a peak transfer of 1.5 MVA.

Total Transfer: 20.0 MVA

Results:

Loading - For the load transfer from 274-H4 to 240-H1, there may be heavy loading conditions of 336 ACSR conductor, but within applicable emergency limits.

For the load transfer of 274-H4 to 433-H12 through the 240-H2 circuit, there may be heavy loading conditions on the 500 kcmil station getaway on 433-H12 and on the 2/0 Aluminum and 1/0 Aluminum sections of primary conductors that may require an upgrade/reconductoring of the conductors.

For the load transfer of 274-H2 to 65-H3, there may be heavy loading conditions that may require the replacement of a voltage regulator.

For the load transfer of 240-H2 to 433-H12, there may be heavy loading conditions on the 2/0 Aluminum and 1/0 Aluminum overhead conductors, that may require an upgrade/reconductoring of the conductors.

Voltage - For the load transfer from 274-H4 to 240-H1 there may be low voltage conditions on “A” phase of some laterals; that may require the installation of switched capacitor banks for post contingency conditions voltage remediation.

Additional Actions Required:

None.

STATION 274

WESTERN AVE.
SHERBORN

TEL #(508)370-4870

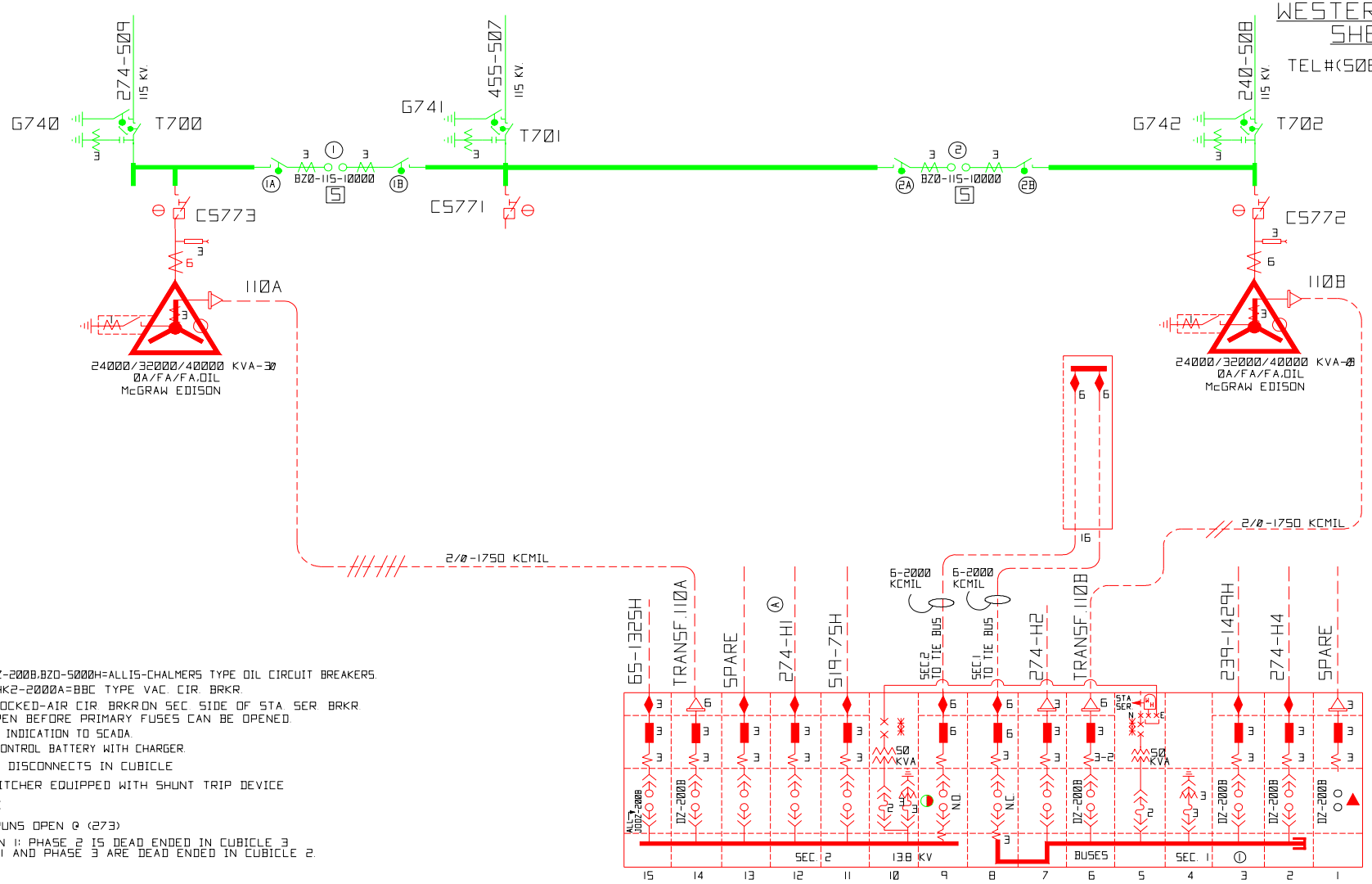

NOTES

DZ-200B,DOOZ-200B,BZO-5000H=ALLIS-CHALMERS TYPE OIL CIRCUIT BREAKERS.
HK2-1200A,HK2-2000A=BBC TYPE VAC. CIR. BRKR.

✳ ✳ —KEY INTERLOCKED-AIR CIR. BRKR ON SEC. SIDE OF STA. SER. BRKR. MUST BE OPEN BEFORE PRIMARY FUSES CAN BE OPENED. CONTROL AND INDICATION TO SCADA.
1-120 VOLT CONTROL BATTERY WITH CHARGER.

▲ —NO PRIMARY DISCONNECTS IN CUBICLE

⊖ —CIRCUIT SWITCHER EQUIPPED WITH SHUNT TRIP DEVICE

◐ —ABR SCHEME

✳ 14KV BKR RUNS OPEN @ (273)

① BUS SECTION 1: PHASE 2 IS DEAD ENDED IN CUBICLE 3 AND PHASE 1 AND PHASE 3 ARE DEAD ENDED IN CUBICLE 2.

DATE	DESCRIPTION	BY	CHCK
5/8/02	REVISED DWG. FROM ENGINEER'S MARK-UP	EBA	PSL
12/31/01	UPDATED FROM FIELD PRINT	RPE	
8/4/00	UPDATED FROM FIELD PRINT	WJB	

NSTAR ELECTRIC
AN NSTAR COMPANY

274

_STA_01A\STA274.DWG, 05/08/02 at 12:40

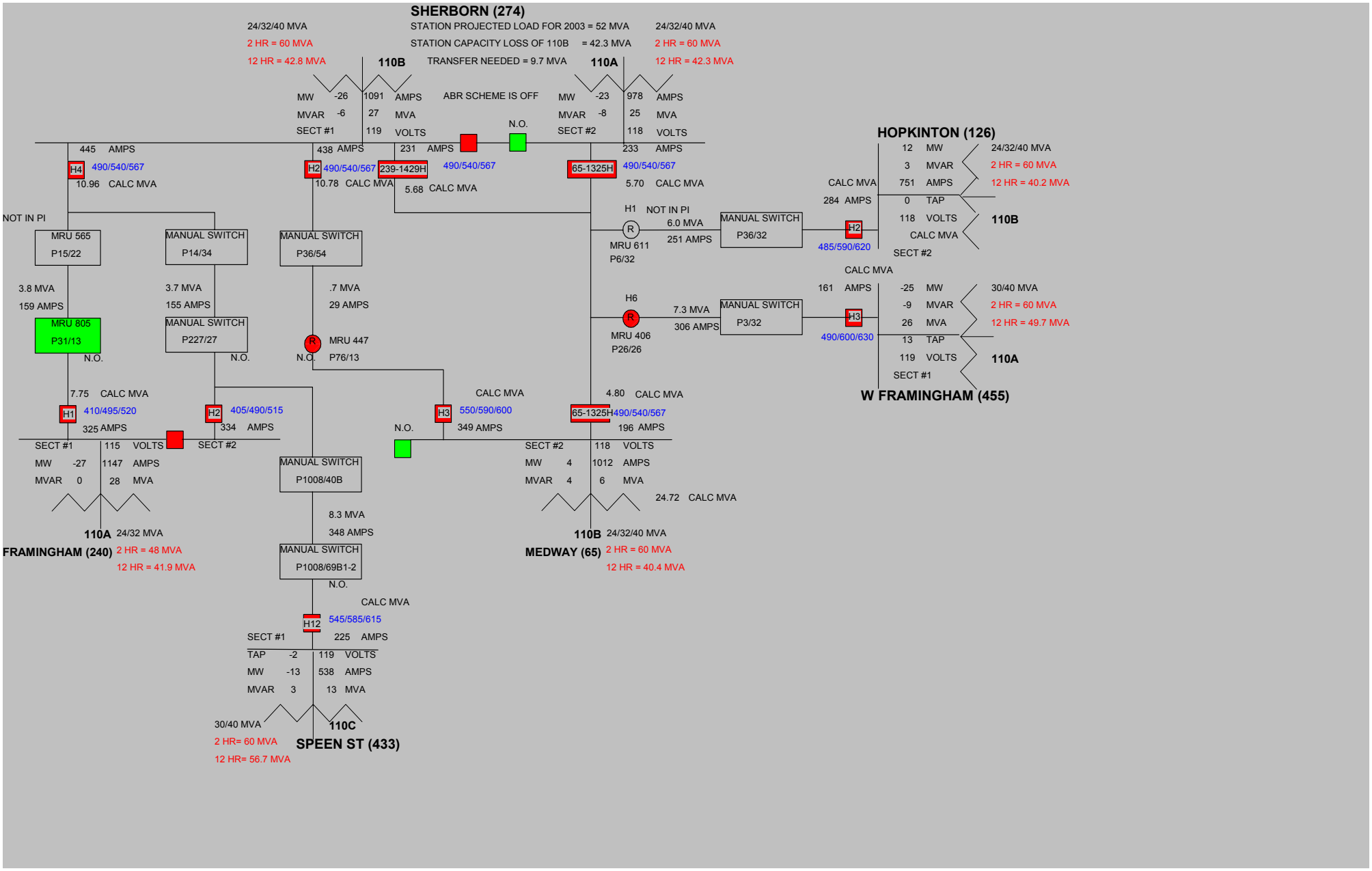
SHERBORN (274)
STATION PROJECTED LOAD FOR 2003 = 52 MVA
STATION CAPACITY LOSS OF 110B = 42.3 MVA
TRANSFER NEEDED = 9.7 MVA
ABR SCHEME IS OFF
24/32/40 MVA
2 HR = 60 MVA
12 HR = 42.8 MVA
110B
MW -26 1091 AMPS
MVAR -6 27 MVA
SECT #1 119 VOLTS
24/32/40 MVA
2 HR = 60 MVA
12 HR = 42.3 MVA
110A
MW -23 978 AMPS
MVAR -8 25 MVA
SECT #2 118 VOLTS
N.O.
445 AMPS
H4 490/540/567
10.96 CALC MVA
438 AMPS
H2 490/540/567
10.78 CALC MVA
231 AMPS
239-1429H 490/540/567
5.68 CALC MVA
233 AMPS
65-1325H 490/540/567
5.70 CALC MVA
NOT IN PI
MRU 565
P15/22
MANUAL SWITCH
P14/34
MANUAL SWITCH
P36/54
3.8 MVA
159 AMPS
3.7 MVA
155 AMPS
.7 MVA
29 AMPS
MRU 805
P31/13
N.O.
MANUAL SWITCH
P227/27
N.O.
R
MRU 447
N.O.
P76/13
7.75 CALC MVA
H1 410/495/520
325 AMPS
H2 405/490/515
334 AMPS
SECT #1 115 VOLTS
SECT #2
MW -27 1147 AMPS
MVAR 0 28 MVA
110A 24/32 MVA
FRAMINGHAM (240) 2 HR = 48 MVA
12 HR = 41.9 MVA
MANUAL SWITCH
P1008/40B
8.3 MVA
348 AMPS
MANUAL SWITCH
P1008/69B1-2
N.O.
CALC MVA
H12 545/585/615
SECT #1 225 AMPS
TAP -2 119 VOLTS
MW -13 538 AMPS
MVAR 3 13 MVA
30/40 MVA
2 HR= 60 MVA
12 HR= 56.7 MVA
110C
SPEEN ST (433)
CALC MVA
H3 550/590/600
349 AMPS
N.O.
4.80 CALC MVA
65-1325H 490/540/567
196 AMPS
SECT #2 118 VOLTS
MW 4 1012 AMPS
MVAR 4 6 MVA
24.72 CALC MVA
110B 24/32/40 MVA
MEDWAY (65) 2 HR = 60 MVA
12 HR = 40.4 MVA
H1 NOT IN PI
R
MRU 611
P6/32
6.0 MVA
251 AMPS
MANUAL SWITCH
P36/32
H2
485/590/620
H6
R
MRU 406
P26/26
7.3 MVA
306 AMPS
MANUAL SWITCH
P3/32
H3
490/600/630
HOPKINTON (126)
12 MW
3 MVAR
751 AMPS
0 TAP
118 VOLTS
CALC MVA
SECT #2
24/32/40 MVA
2 HR = 60 MVA
12 HR = 40.2 MVA
110B
CALC MVA
284 AMPS
CALC MVA
161 AMPS
-25 MW
-9 MVAR
26 MVA
13 TAP
119 VOLTS
SECT #1
30/40 MVA
2 HR = 60 MVA
12 HR = 49.7 MVA
110A
W FRAMINGHAM (455)

2003 T&D OPERATING STUDY
FRAMINGHAM DISTRICT

STATION #342 SUDBURY

Transformer #110A: Westinghouse 18/24 MVA 110/13.8 kV
Transformer #110B Westinghouse 18/24 MVA 110/13.8 kV

Overload Ratings:

Transformer	Nameplate	12 hour LTE, 90F Ambient	12 hour LTE, 110F Ambient
110A	18/24 MVA	36 MVA	32 MVA
110B	18/24 MVA	33 MVA	31 MVA

Station Capabilities:

Total Station Capacity (N)	Station Firm Capacity (LTE)	RADSEC Transfer	Manual Transfer	Total LCC
48 MVA	29 MVA*	7.2 MVA	0 MVA	36.2 MVA

* Based upon loss of 110A.

Switching Actions:

Loss of Transformer #110A:

Open: Circuit Breakers #1 and #2
Main 110A 13.8kV Secondary Circuit Breaker
Manually open T725 disconnect
Close: 13.8kV Bus Tie Operated Normally Closed
Manually close OCB's #1 and #2 to close 115kV ring

Loss of Transformer #110B:

Open: Circuit Breakers #4 and #5
Main 110B 13.8kV Circuit Breaker
Close: 13.8kV Bus Tie Operated Normally Closed
Circuit Breakers #4 and #5 to close 115kV ring

For loss of either transformer, transfer of the following DSS lines via RADSEC switches may also be required:

Sudbury 342-H1 to Lexington 320-H6 via RADSEC MRU 113 for a transfer of 4.8 MVA
Sudbury 342-H3 to Speen Street 433-H6 via RADSEC MRU 836 for a transfer of 2.4 MVA

Total Transfer: 7.2 MVA

Results:

Loading	-	No heavy loading conditions were identified.
Voltage	-	For the Load transfer for 342-H1 to 320-H6, there may be low voltage conditions that may require switched capacitor banks for post contingency voltage remediation For the load transfer for 342-H3 to 433-H6, there may be low voltage conditions that may require voltage regulators for post contingency conditions voltage remediation.

Additional Actions Required:

Installation of additional transformer capacity is planned for this station in 2003. This will increase the transformer firm capability to at least 60 MVA, which will obviate the need to employ lad transfers under transformer outage conditions.

STATION 342

OFF BOSTON POST RD.
SUDBURY
SUDBURY RING
TEL.# (508)370-4879

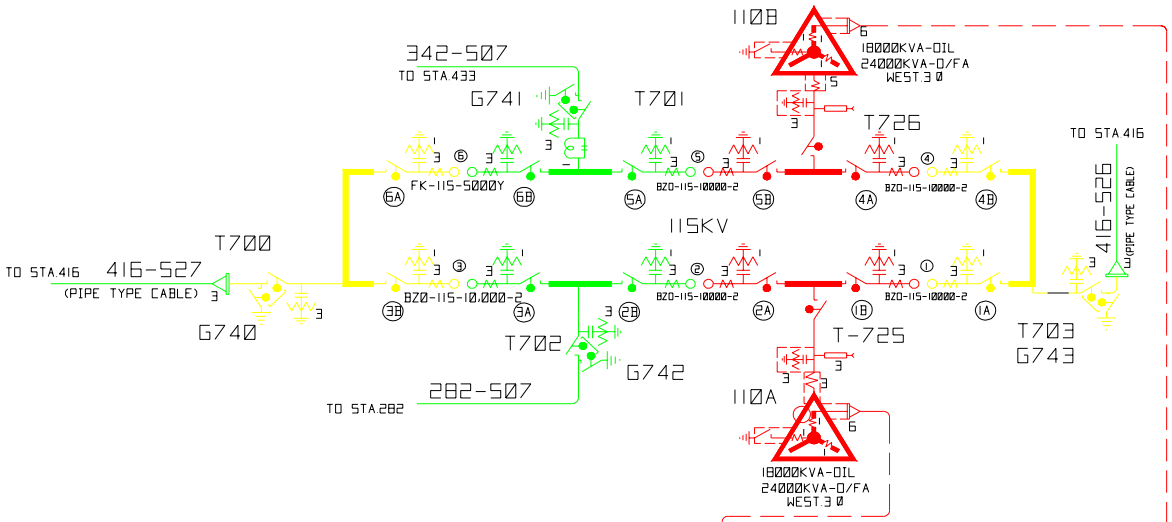

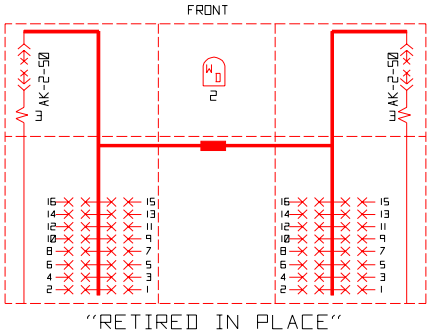

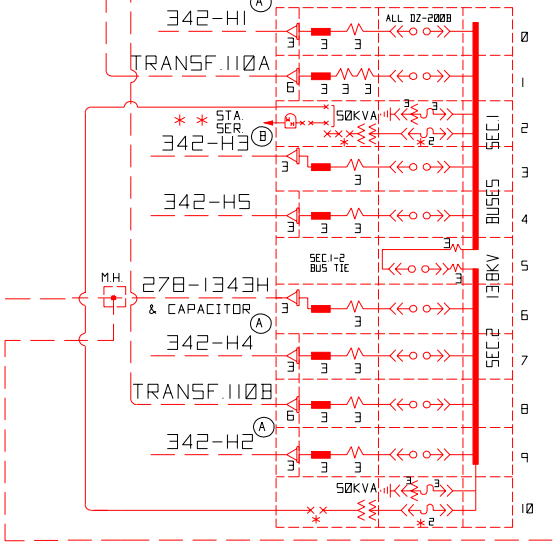

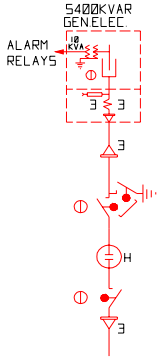

NOTES:

FK-115-3000Y=GENERAL ELECTRIC TYPE OIL CIRCUIT BREAKERS.
BZO-115-10000-2,DZ-200B=ALLIS-CHALMERS TYPE OIL CIRCUIT BREAKERS.
* KEY INTERLOCKED-THE STA.SER.SEC.BRKR.MUST BE OPEN TO RELEASE THE KEY TO OPEN THE PRIMARY FUSE COMPT.
SUPERVISORY SIGNAL INDICATION AND CONTROLS TO SCC.
1-130 VOLT CONTROL BATTERY WITH CHARGER.
H=ALLIS-CHALMERS TYPE VACUUM BREAKER.
① KEY INTERLOCKED-THE CAPACITOR GANG OPERATED BLADES MUST BE OPENED TO RELEASE THE KEY TO UNLOCK AND CLOSE THE GROUND DISCHARGE SWITCH.
**STA.SERVICE METER LOCATED INSIDE CONTROL HOUSE, BEHIND 13.8KV CONTROL BOARD(342-H2)

DATE	DESCRIPTION	BY	CHCK
9/3/02	REIDENTIFIED BKR. FOR CKT. 3	EBA	RBB
5/14/02	CHANGED LINE 338-1341 TO 342-H5 & MOVED CAP TO CUB 6	WJB	RBB

NSTAR ELECTRIC
AN NSTAR COMPANY

342

.STA.DIA\STA342.DWG, 09/03/02 at 09:31

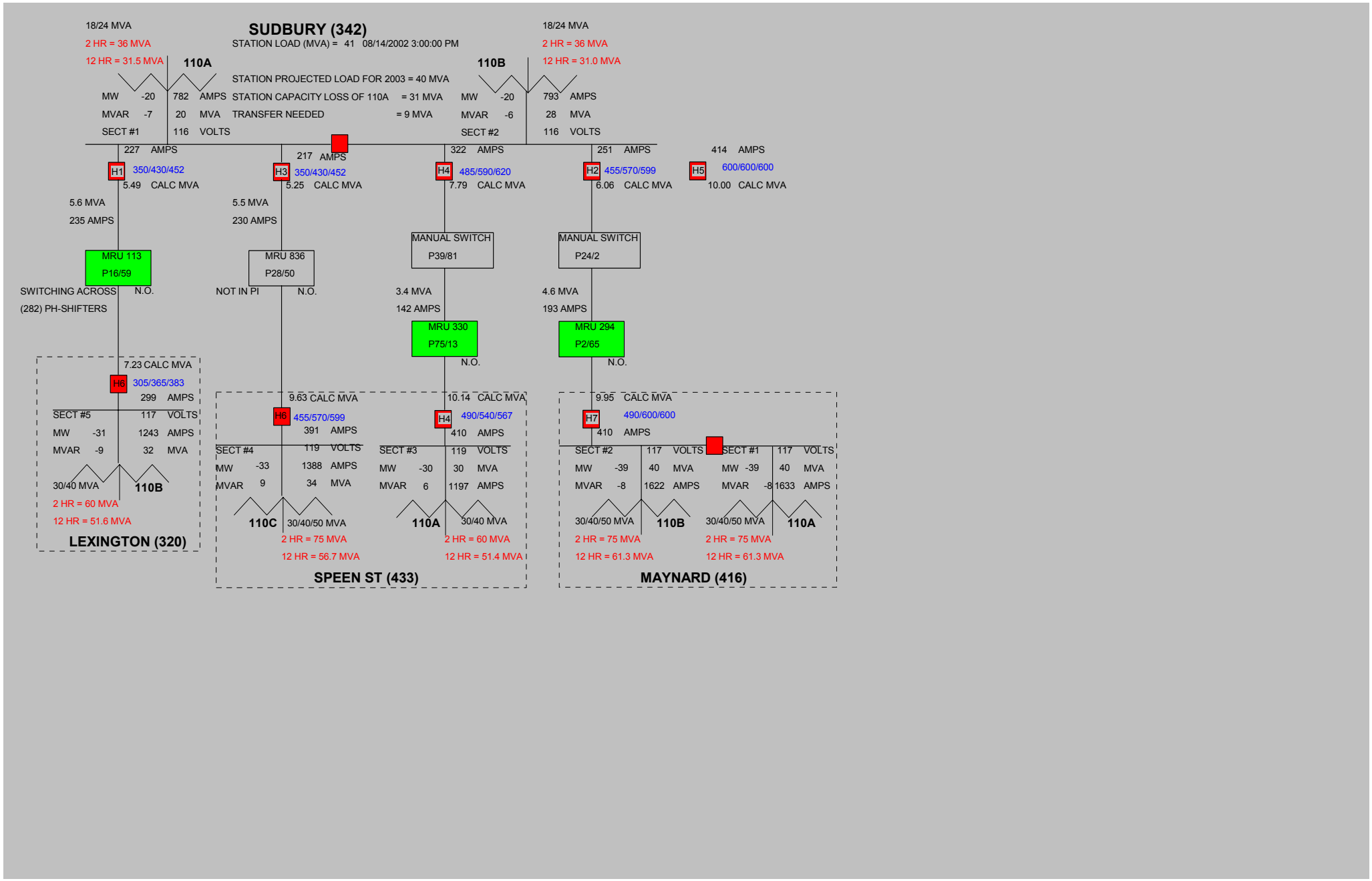
SUDBURY (342)
STATION LOAD (MVA) = 41 08/14/2002 3:00:00 PM
STATION PROJECTED LOAD FOR 2003 = 40 MVA
STATION CAPACITY LOSS OF 110A = 31 MVA
TRANSFER NEEDED = 9 MVA
18/24 MVA
2 HR = 36 MVA
12 HR = 31.5 MVA
110A
MW -20
MVAR -7
SECT #1
782 AMPS
20 MVA
116 VOLTS
18/24 MVA
2 HR = 36 MVA
12 HR = 31.0 MVA
110B
MW -20
MVAR -6
SECT #2
793 AMPS
28 MVA
116 VOLTS
227 AMPS
H1 350/430/452
5.49 CALC MVA
217 AMPS
H3 350/430/452
5.25 CALC MVA
322 AMPS
H4 485/590/620
7.79 CALC MVA
251 AMPS
H2 455/570/599
6.06 CALC MVA
414 AMPS
H5 600/600/600
10.00 CALC MVA
5.6 MVA
235 AMPS
5.5 MVA
230 AMPS
MRU 113
P16/59
SWITCHING ACROSS
(282) PH-SHIFTERS
N.O.
MRU 836
P28/50
NOT IN PI
N.O.
MANUAL SWITCH
P39/81
3.4 MVA
142 AMPS
MRU 330
P75/13
N.O.
MANUAL SWITCH
P24/2
4.6 MVA
193 AMPS
MRU 294
P2/65
N.O.
7.23 CALC MVA
H6 305/365/383
299 AMPS
SECT #5
117 VOLTS
MW -31
1243 AMPS
MVAR -9
32 MVA
30/40 MVA
110B
2 HR = 60 MVA
12 HR = 51.6 MVA
LEXINGTON (320)
9.63 CALC MVA
H6 455/570/599
391 AMPS
SECT #4
119 VOLTS
MW -33
1388 AMPS
MVAR 9
34 MVA
110C
30/40/50 MVA
2 HR = 75 MVA
12 HR = 56.7 MVA
10.14 CALC MVA
H4 490/540/567
410 AMPS
SECT #3
119 VOLTS
MW -30
30 MVA
MVAR 6
1197 AMPS
110A
30/40 MVA
2 HR = 60 MVA
12 HR = 51.4 MVA
SPEEN ST (433)
9.95 CALC MVA
H7 490/600/600
410 AMPS
SECT #2
117 VOLTS
MW -39
40 MVA
MVAR -8
1622 AMPS
30/40/50 MVA
110B
2 HR = 75 MVA
12 HR = 61.3 MVA
SECT #1
117 VOLTS
MW -39
40 MVA
MVAR -8
1633 AMPS
30/40/50 MVA
110A
2 HR = 75 MVA
12 HR = 61.3 MVA
MAYNARD (416)

2003 T&D OPERATING STUDY
FRAMINGHAM DISTRICT

STATION #416 MAYNARD

Transformer #110A: McGraw-Edison 30/40/50 [56] MVA 115/14.4 kV
Transformer #110B McGraw-Edison 30/40/50 [56] MVA 115/14.4 kV

Overload Ratings:

Transformer	Nameplate	12 hour LTE, 90F Ambient	12 hour LTE, 110F Ambient
110A	30/40/50 [56} MVA	69 MVA	64 MVA
110B	30/40/50 [56} MVA	69 MVA	64 MVA

Station Capabilities:

Total Station Capacity (N)	Station Firm Capacity (LTE)	RADSEC Transfer	Manual Transfer	Total LCC
48 MVA	60 MVA*	10.1 MVA	0 MVA	70.1 MVA

* Based upon loss of 110A/416-526 or 110B/416-527.

Switching Actions:

Loss of Transformer #110A, 416-526 Line and 219-532 Line:

Open: OCB's 1 & 4 @ Sudbury
Circuit Switcher #CS773
Main 110A 13.8kV Secondary Circuit Breaker
Close: 13.8kV Bus Tie Operated Normally Closed
Manually close OCB's 1 & 4 @ Sudbury

Loss of Transformer #110B, 416-527 Line and 219-533 Line:

Open: OCB's 3 & 6 @ Sudbury
Circuit Switcher #CS774
Main 110B 13.8kV Circuit Breaker
Close: 13.8kV Bus Tie Operated Normally Closed
Manually close OCB's 3 & 6 @ Sudbury

Note: For loss of either transformer, circuit 416-H4 will trip automatically within 30 minutes if total station load is 3000 Amps or greater.

For loss of either transformer, transfer of the following DSS lines via RADSEC switches may also be required:

Maynard 416-H7 to Sudbury 342-H1 via RADSEC MRU 096 for a transfer of 10.1 MVA

Results:

Loading		For the load transfer between 416-H7 to 342-H1, there may be heavy loading conditions on the 500 kcmil Aluminum conductor in the station getaway of circuit 342-H1. This heavy loading condition may require an upgrade/reconductoring of the conductor. For the load transfer between 417-H7 and 342-H2, there may be heavy loading conditions on the #4 copper conductor sections of 342-H2. This heavy loading condition may require an upgrade/reconductoring of the conductor.
Voltage	-	The installation of switched capacitor banks may be required for post-contingency voltage remediation.

Additional Actions Required:

Install 342-H6 to increase the transfer switching from Maynard to Sudbury by 10 MVA.

"T"

STATION 416
OLD MILL ROAD
MAYNARD

TEL# (617)541-7933

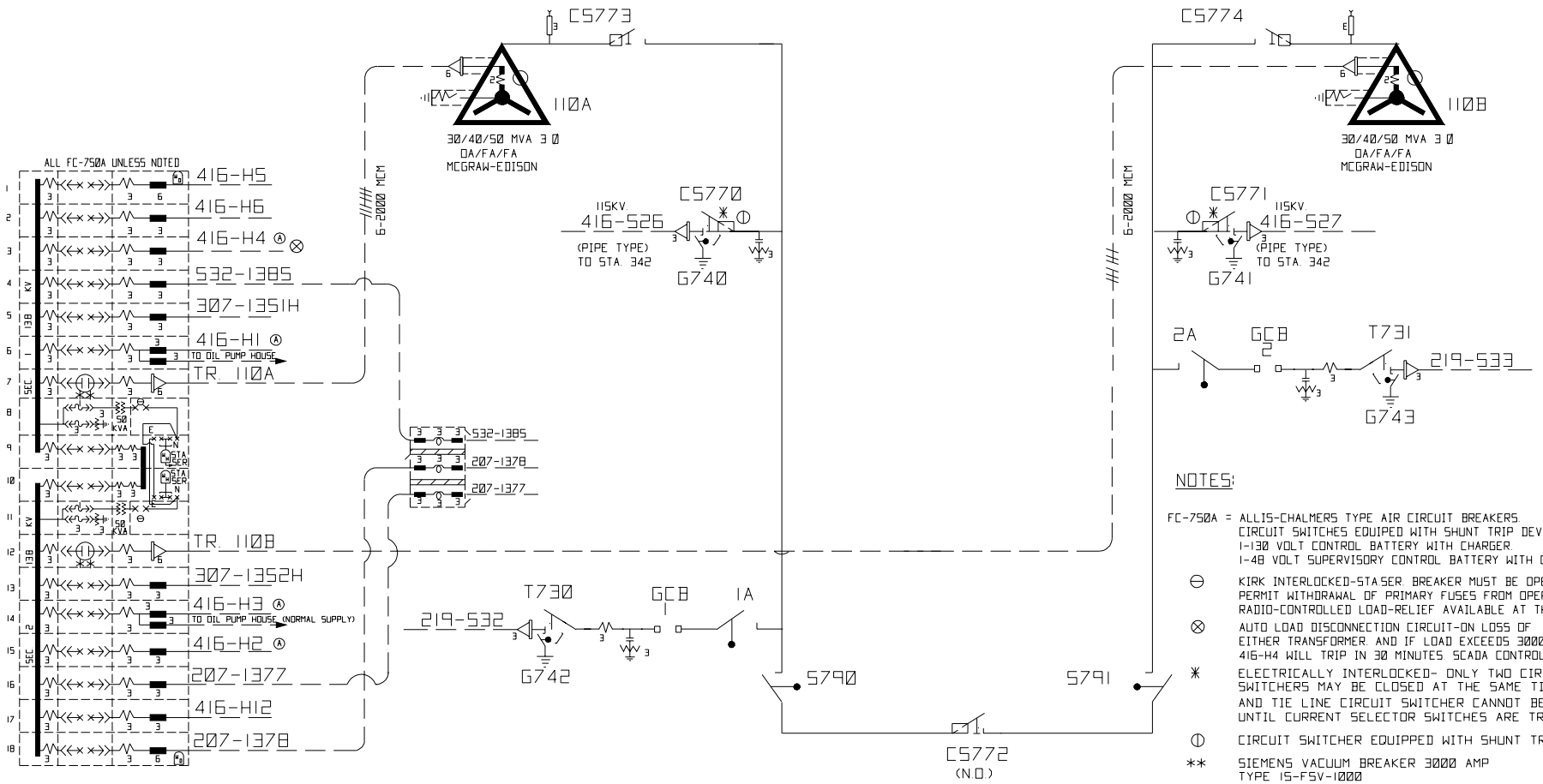

NOTES:

FC-750A = ALLIS-CHALMERS TYPE AIR CIRCUIT BREAKERS.
CIRCUIT SWITCHES EQUIPED WITH SHUNT TRIP DEVICE.
1-130 VOLT CONTROL BATTERY WITH CHARGER.
1-48 VOLT SUPERVISORY CONTROL BATTERY WITH CHARGER

⊖ KIRK INTERLOCKED-STASER. BREAKER MUST BE OPENED TO PERMIT WITHDRAWAL OF PRIMARY FUSES FROM OPERATING POSITION. RADIO-CONTROLLED LOAD-RELIEF AVAILABLE AT THIS STA.

⊗ AUTO LOAD DISCONNECTION CIRCUIT-ON LOSS OF EITHER TRANSFORMER. AND IF LOAD EXCEEDS 3000 AMPS, 416-H4 WILL TRIP IN 30 MINUTES SCADA CONTROL AND INDICATION

✳ ELECTRICALLY INTERLOCKED- ONLY TWO CIRCUIT SWITCHERS MAY BE CLOSED AT THE SAME TIME. AND TIE LINE CIRCUIT SWITCHER CANNOT BE CLOSED UNTIL CURRENT SELECTOR SWITCHES ARE TRANSFERRED LOCALL

⦶ CIRCUIT SWITCHER EQUIPPED WITH SHUNT TRIP.

** SIEMENS VACUUM BREAKER 3000 AMP TYPE 15-FSV-1000

416

BOSTON EDISON COMPANY
DELIVERY ENGINEERING DEPARTMENT
ELECTRICAL DESIGN DRAFTING GROUP

DATE	DESCRIPTION	BY	CHCK
6/14/00	REVISED DWG. FROM FIELD INFORMATION.	WJB	

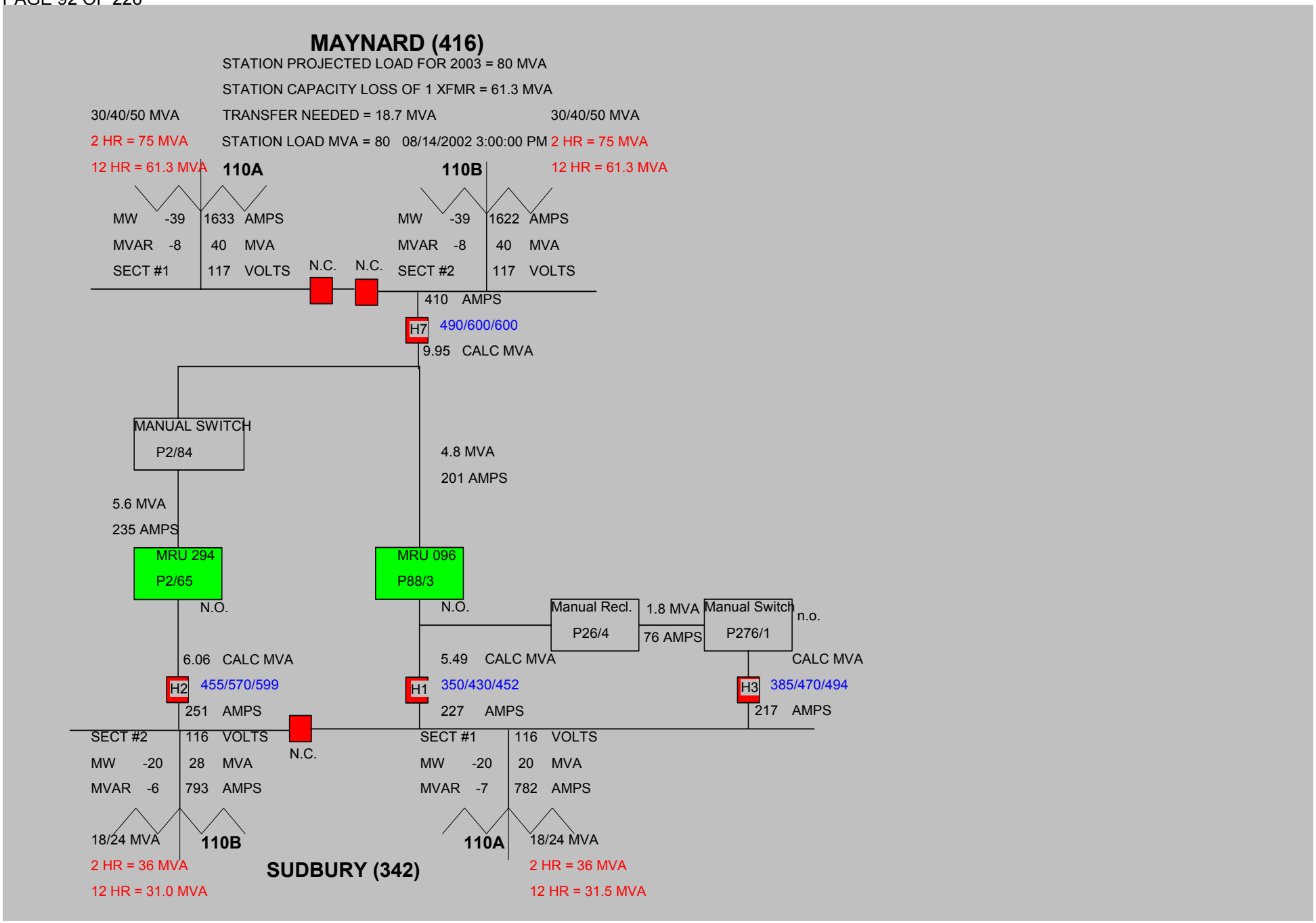
MAYNARD (416)
STATION PROJECTED LOAD FOR 2003 = 80 MVA
STATION CAPACITY LOSS OF 1 XFMR = 61.3 MVA
30/40/50 MVA
TRANSFER NEEDED = 18.7 MVA
30/40/50 MVA
2 HR = 75 MVA
STATION LOAD MVA = 80
08/14/2002 3:00:00 PM
2 HR = 75 MVA
12 HR = 61.3 MVA
110A
110B
12 HR = 61.3 MVA
MW -39 1633 AMPS
MVAR -8 40 MVA
SECT #1 117 VOLTS
N.C.
N.C.
MW -39 1622 AMPS
MVAR -8 40 MVA
SECT #2 117 VOLTS
410 AMPS
H7
490/600/600
9.95 CALC MVA
MANUAL SWITCH
P2/84
4.8 MVA
201 AMPS
5.6 MVA
235 AMPS
MRU 294
P2/65
MRU 096
P88/3
N.O.
N.O.
Manual Recl.
P26/4
1.8 MVA
76 AMPS
Manual Switch
P276/1
n.o.
6.06 CALC MVA
5.49 CALC MVA
CALC MVA
H2
455/570/599
H1
350/430/452
H3
385/470/494
251 AMPS
227 AMPS
217 AMPS
SECT #2 116 VOLTS
MW -20 28 MVA
MVAR -6 793 AMPS
N.C.
SECT #1 116 VOLTS
MW -20 20 MVA
MVAR -7 782 AMPS
18/24 MVA
110B
2 HR = 36 MVA
12 HR = 31.0 MVA
SUDBURY (342)
110A
18/24 MVA
2 HR = 36 MVA
12 HR = 31.5 MVA

2003 T&D OPERATING STUDY
FRAMINGHAM DISTRICT

STATION #433 SPEEN STREET

Transformer #110A: McGraw-Edison 30/40 [44.8] MVA 110/13.8 kV
Transformer #110B: McGraw-Edison 30/40 [44.8] MVA 110/13.8 kV
Transformer #110C: McGraw-Edison 60/80/100 [112] MVA 115/14.4/14.4 kV

Overload Ratings:

Transformer	Nameplate	12 hour LTE, 90F Ambient	12 hour LTE, 110F Ambient
110A	30/40 [44.8] MVA	58 MVA	54 MVA
110B	30/40 [44.8] MVA	58 MVA	54 MVA
110C	60/80/100 [112] MVA	127 MVA	119 MVA

Station Capabilities:

Total Station Capacity (N)	Station Firm Capacity (LTE)	RADSEC Transfer	Manual Transfer	Total LCC
180 MVA	100 MVA*	10.5 MVA	12.6 MVA	123.1 MVA

* Based upon loss of 110C.

Switching Actions:

Loss of Transformer #110A or #110B and 342-507 Line:

Open: OCB's 5 & 6 @ Sudbury
OCB #2
Circuit Switcher #CS770
Main 110A 13.8kV Secondary Circuit Breaker
Main 110B 13.8kV Secondary Circuit Breaker
Close: ABR Scheme Closes 13.8kV Bus Tie Automatically
Manually close OCB's 5 & 6 @ Sudbury
Manually close OCB #2

Note: Due to station configuration, a forced outage of the #110A bank results in a forced outage of the #110B bank, and conversely, due to a lack of a disconnecting device on the 115kV side of these banks.

Loss of Transformer #110C and 433-507 Line:

Open: OCB's 7 & 8 @ Framingham
OCB #1
Circuit Switcher #CS771
Both Main #110C 13.8kV Secondary Circuit Breakers
Close: ABR Scheme Closes 13.8kV Bus Tie Automatically
Manually close OCB's 7 & 8 @ Framingham
Manually close OCB #1

For loss of either transformer, transfer of the following DSS lines via RADSEC and/or manual switches may also be required:

Speen Street 433-H11 to Framingham Station 240 via three possible switching arrangements:

Portion of 433-H11 to Framingham 240-H1 via manual switch P8/36D for a transfer of 1.5 MVA
Portion of 433-H11 to Framingham 240-H5 via manual switch P8/36D and RADSEC MRU 614 for a transfer of 4.0 MVA
Portion of 433-H11 to Framingham via Station 23 circuit 23-H1 via manual switch P8/36D and SCADA MRU 906 for a transfer of 3.3 MVA

Speen Street 433-H8 to Framingham 240-H3 via SCAA MRU 169 for a transfer of 1.3 MVA
Speen Street 433-H10 to Framingham 240-H2 via SCAA MRU 997 for a transfer of 2.8 MVA
Speen Street 433-H6 to Sudbury 342-H3 via SCAA MRU 836 for a transfer of 3.8 MVA

Speen Street 433-H4 to Sudbury Station 342 and W. Framingham Station 455 via four possible switching arrangements:

Portion of 433-H4 to Sudbury 342-H4 via RADSEC MRU 836 and manual switch P224/37 for a transfer of 3.8 MVA
Portion of 433-H4 to W. Framingham 455-H1 via RADSEC MRU 342 for a transfer of 0.4 MVA
Portion of 433-H4 to W. Framingham 455-H4 via RADSEC MRU 254 for a transfer of 2.2 MVA

Total Transfer: 23.1 MVA

Results:

Loading — The load transfer from 433-H4 to circuits 342-H4, 455-H1, and 455-H4 revealed the following:

For the 433-H4 to 455-H4 load transfer there may be heavy loading conditions on some of the 1/0 and 3/0 ACSR sections of circuit 455-H4 that may require an upgrade/reconductoring of the conductor sections.

For the 433-H4 to 342-H4 load transfer there may be heavy loading conditions

on some of the 1/0 and 3/0 ACSR sections of circuit 342-H4 that may require an upgrade/reconductoring of the conductor sections.

For the load transfer from 433-H8 to 240-H3 there may be heavy loading conditions on several sections of #4 copper conductor and sections of 336 ACSR conductor of circuit 240-H3, but are within applicable emergency ratings.

For the load transfer from 240-H1 to 240-H5 there may be heavy loading conditions on the sections of 336 ACSR conductor of circuit 240-H5, but are within the applicable emergency ratings.

Voltage

The load transfer from 433-H10 to 240-H2 may result in lower voltage conditions, but are within ANSI "B" range.

The load transfer from 240-H1 to 23-H2 may result in lower voltage conditions, but are within ANSI "B" range.

For the load transfer from 240-H1 to 240-H5, the installation of a voltage regulator may be required for post-contingency voltage remediation.

Additional Actions Required:

Install additional RADEC switches to increase the Speen Street transfer switching by 5 MVA.

M-COLOR "T"

STATION 433
110 SPEEN STREET
FRAMINGHAM
TEL. # (617)-541-7938

✳ AUTO BUS RESTORAL SCHEME TO MANUAL BEFORE OPERATING BUS TIE OR SECONDARY BREAKERS

✳ 433-H8
433-H4
433-H5
A.L.D. IN SERVICE
SEE SCADA

NOTES:
1-48V.CONTROL BATTERY W/CHARGER.
CURRIER SMITH ALARMING TO SCC
FK-115-5000=G.E.OIL CIRCUIT BREAKERS.
150-DH-750=WESTINGHOUSE TYPE AIR CIRCUIT BREAKERS.
VSC=JOSLYN TYPE VACUUM BREAKERS
1-120 VOLT CONTROL BATTERY WITH CHARGER.
✳ KEY INTERLOCKED-THE AIR CIRCUIT BREAKER ON THE SEC.SIDE OF THE STA.SER.TRANSF.MUST BE OPEN TO RELEASE THE KEY TO WITHDRAW THE PRIMARY FUSES FROM OPERATING POSITION.
① KEY INTERLOCKED-THE CAPACITOR GROUNDING DISCONNECTS MUST BE CLOSED TO RELEASE THE KEY TO OPEN ITS RESPECTIVE UNIT ACCESS GATE.
QUINDOR BULK 1000 SHEDDING AVAILABLE AT THIS STATION.
MECHANICAL INTERLOCK-STATION SERVICE SEC.BREAKER MUST BE OPENED TO PERMIT WITHDRAWL OF PRIMARY FUSES FROM OPERATING POSITION.
15-HK-750=I.T.E.AIR CIRCUIT BREAKERS.
◐ CIRCUIT SWITCHER EQUIPPED W/SHUNT TRIP DEVICE.
△ NORMALLY OPEN-CLOSES AUTOMATICALLY UPON LOSS OF EITHER 110A OR 110C. BY RELAY OPERATION ONLY
◒ NORMALLY OPEN. CLOSES AUTOMATICALLY UPON LOSS OF EITHER 110A OR 110C. BY RELAY OPERATION ONLY.

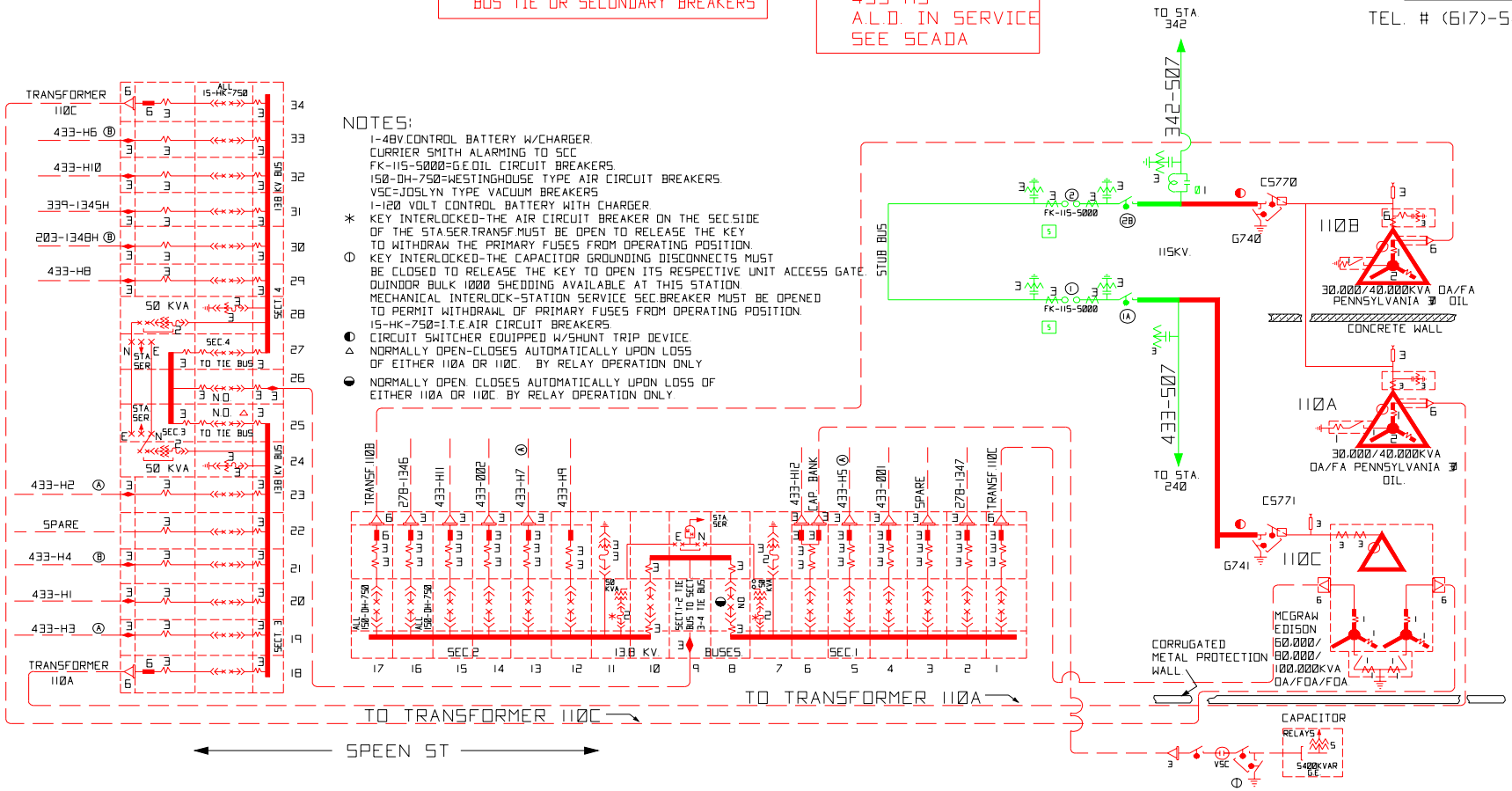

BOSTON EDISON COMPANY
ENGINEERING SERVICES GROUP

DATE	DESCRIPTION	BY	CHCK
7/21/00	REVISED PER FIELD MARK-UP.	EBA	
4/28/97	ADDED ◒ SYMBOL & ASSOCIATED NOTE	WJB	

433

_STA_DIA\STA433, 05/10/96 at 09:44

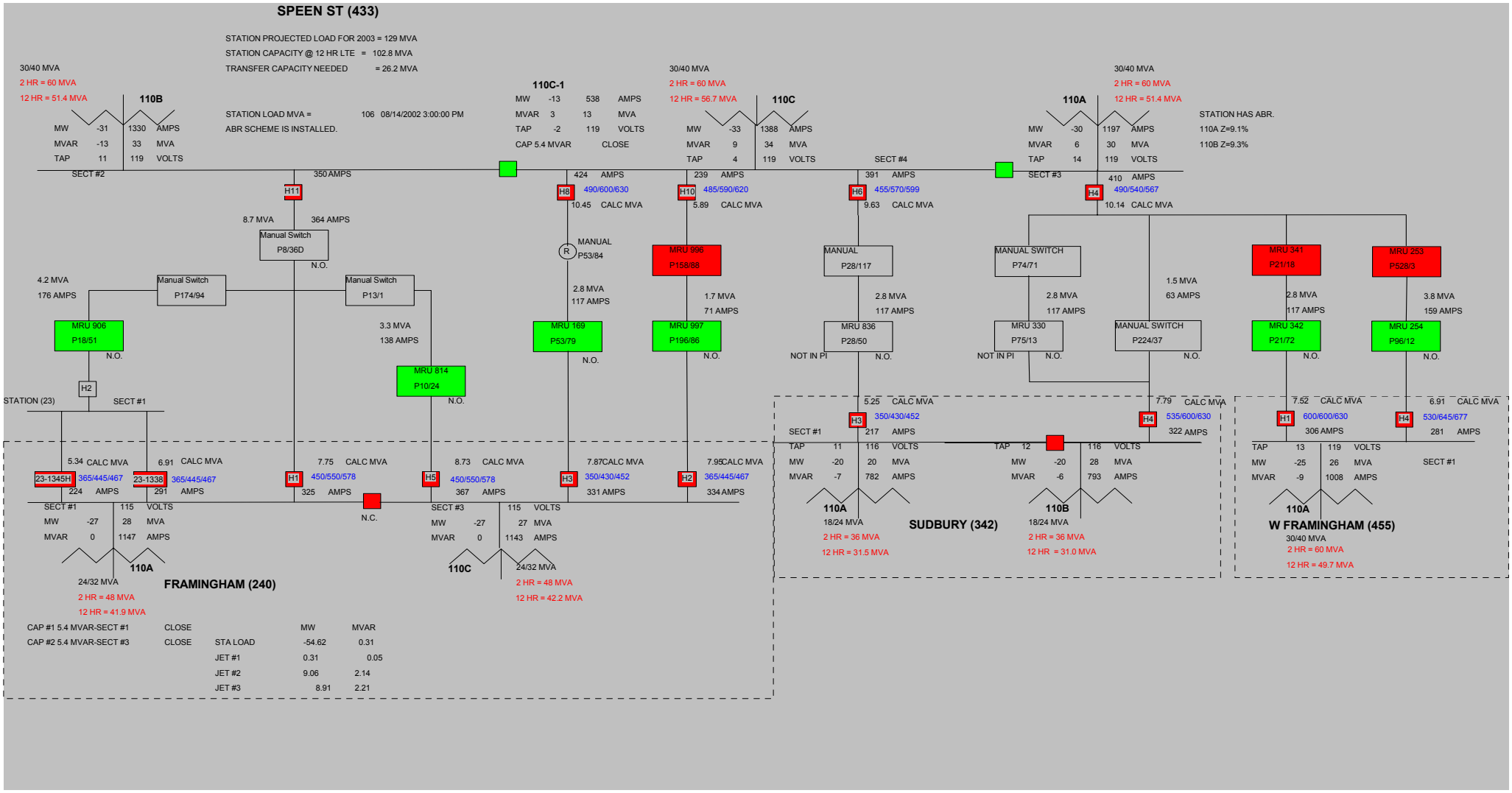
SPEEN ST (433)
STATION PROJECTED LOAD FOR 2003 = 129 MVA
STATION CAPACITY @ 12 HR LTE = 102.8 MVA
TRANSFER CAPACITY NEEDED = 26.2 MVA
STATION LOAD MVA = 106 08/14/2002 3:00:00 PM
ABR SCHEME IS INSTALLED.
30/40 MVA
2 HR = 60 MVA
12 HR = 51.4 MVA
110B
MW -31 1330 AMPS
MVAR -13 33 MVA
TAP 11 119 VOLTS
SECT #2
350 AMPS
110C-1
MW -13 538 AMPS
MVAR 3 13 MVA
TAP -2 119 VOLTS
CAP 5.4 MVAR CLOSE
30/40 MVA
2 HR = 60 MVA
12 HR = 56.7 MVA
110C
MW -33 1388 AMPS
MVAR 9 34 MVA
TAP 4 119 VOLTS
SECT #4
30/40 MVA
2 HR = 60 MVA
12 HR = 51.4 MVA
110A
MW -30 1197 AMPS
MVAR 6 30 MVA
TAP 14 119 VOLTS
SECT #3
STATION HAS ABR.
110A Z=9.1%
110B Z=9.3%
H11
8.7 MVA 364 AMPS
Manual Switch P8/36D
N.O.
4.2 MVA 176 AMPS
Manual Switch P174/94
Manual Switch P13/1
MRU 906 P18/51
N.O.
H2
STATION (23) SECT #1
3.3 MVA 138 AMPS
MRU 814 P10/24
N.O.
424 AMPS
H8 490/600/630
10.45 CALC MVA
MANUAL P53/84
2.8 MVA 117 AMPS
MRU 169 P53/79
N.O.
239 AMPS
H10 485/590/620
5.89 CALC MVA
MRU 996 P158/88
1.7 MVA 71 AMPS
MRU 997 P196/86
N.O.
391 AMPS
H6 455/570/599
9.63 CALC MVA
MANUAL P28/117
2.8 MVA 117 AMPS
MRU 836 P28/50
NOT IN PI N.O.
410 AMPS
H4 490/540/567
10.14 CALC MVA
MANUAL SWITCH P74/71
2.8 MVA 117 AMPS
MRU 330 P75/13
NOT IN PI N.O.
1.5 MVA 63 AMPS
MANUAL SWITCH P224/37
N.O.
MRU 341 P21/18
2.8 MVA 117 AMPS
MRU 342 P21/72
N.O.
MRU 253 P528/3
3.8 MVA 159 AMPS
MRU 254 P96/12
N.O.
5.34 CALC MVA
23-1345H 365/445/467
224 AMPS
6.91 CALC MVA
23-1338 365/445/467
291 AMPS
SECT #1
115 VOLTS
MW -27 28 MVA
MVAR 0 1147 AMPS
110A
24/32 MVA
2 HR = 48 MVA
12 HR = 41.9 MVA
FRAMINGHAM (240)
7.75 CALC MVA
H1 450/550/578
325 AMPS
N.C.
8.73 CALC MVA
H5 450/550/578
367 AMPS
SECT #3
115 VOLTS
MW -27 27 MVA
MVAR 0 1143 AMPS
110C
24/32 MVA
2 HR = 48 MVA
12 HR = 42.2 MVA
7.87 CALC MVA
H3 350/430/452
331 AMPS
7.95 CALC MVA
H2 365/445/467
334 AMPS
CAP #1 5.4 MVAR-SECT #1 CLOSE
CAP #2 5.4 MVAR-SECT #3 CLOSE
STA LOAD MW -54.62 MVAR 0.31
JET #1 0.31 0.05
JET #2 9.06 2.14
JET #3 8.91 2.21
5.25 CALC MVA
H3 350/430/452
217 AMPS
SECT #1
TAP 11 116 VOLTS
MW -20 20 MVA
MVAR -7 782 AMPS
110A
18/24 MVA
2 HR = 36 MVA
12 HR = 31.5 MVA
SUDBURY (342)
TAP 12 116 VOLTS
MW -20 28 MVA
MVAR -6 793 AMPS
110B
18/24 MVA
2 HR = 36 MVA
12 HR = 31.0 MVA
7.79 CALC MVA
H4 535/600/630
322 AMPS
7.52 CALC MVA
H1 600/600/630
306 AMPS
TAP 13 119 VOLTS
MW -25 26 MVA
MVAR -9 1008 AMPS
SECT #1
110A
W FRAMINGHAM (455)
30/40 MVA
2 HR = 60 MVA
12 HR = 49.7 MVA
6.91 CALC MVA
H4 530/645/677
281 AMPS

2003 T&D OPERATING STUDY
FRAMINGHAM DISTRICT

STATION #455 WEST FRAMINGHAM

Transformer #110A: General Electric 30/40 [44.8] MVA 69 x 115/13.8 kV
Transformer #110B: General Electric 30/40 [44.8] MVA 69 x 115/13.8 kV

Overload Ratings:

Transformer	Nameplate	12 hour LTE, 90F Ambient	12 hour LTE, 110F Ambient
110A	30/40 [44.8] MVA	57 MVA	52 MVA
110B	30/40 [44.8] MVA	58 MVA	53 MVA

Station Capabilities:

Total Station Capacity (N)	Station Firm Capacity (LTE)	RADSEC Transfer	Manual Transfer	Total LCC
80 MVA	48 MVA*	9.8 MVA	0 MVA	57.8 MVA

* Based upon loss of 110B.

Switching Actions:

Loss of Transformer #110A:

Open: Circuit Breakers #1 and #2
Main 110A 13.8kV Secondary Circuit Breaker
Manually open disconnect Switch #T730
Close: ABR Scheme Closes 13.8kV Bus Tie Automatically
Manually close OCB's #1 and #2 to reconnect #513-507 line to W. Framingham 115kV bus.

Loss of Transformer #110B and 455-507 Line:

Open: OCB's 1 & 2 @ Sherborn
OCB #3
Circuit Switcher #CS770
Main #110B 13.8kV Secondary Circuit Breaker
Close: ABR Scheme Closes 13.8kV Bus Tie Automatically
Manually close OCB's 1 & 2 @ Sherborn
Manually close OCB #3 to reconnect the 455-507 to the W Framingham 115 KV bus.

For loss of either transformer, transfer of the following DSS lines via RADSEC and/or manual switches may also be required:

W. Framingham 455-H1 to Speen Street 433-H4 via RADSEC MRU 342 for a transfer of 1.0 MVA
W. Framingham 455-H3 to Hopkinton 126-H4 via RADSEC MRU 264 for a transfer of 4.4 MVA
W. Framingham 455-H5 to Framingham 24-1340 and 24-1337 via Station 24-H1 via RADSEC MRU 258 for a transfer of 4.4 MVA

Total Transfer: 9.8 MVA

Results:

Loading		For the 455-H1 to 433-H4 load transfer scenario there may be heavy loading conditions on the 1/0 ACSR conductor sections of 433-H4 that may require an upgrade/reconductoring of the conductor. For the 455-H5 to 24-H1 load transfer scenario there may be heavy loading conditions on the 500 kcmil cable for 24-H1, but are within the applicable emergency rating. For the 455-H4 to 126-H4/433-H4 load transfer scenario there may be heavy loading conditions on the 1/0 ACSR conductor sections of 433-H4 that may require an upgrade/reconductoring of the conductor.
Voltage	-	There were no low voltage conditions identified.

Additional Actions Required:

Install additional RADEC switches to increase the West Framingham transfer switching by 5 MVA.

STATION 455
OFF WORCESTER ROAD AT RIGHT-OF-WAY #3 WEST FRAMINGHAM

TEL# 370-4874

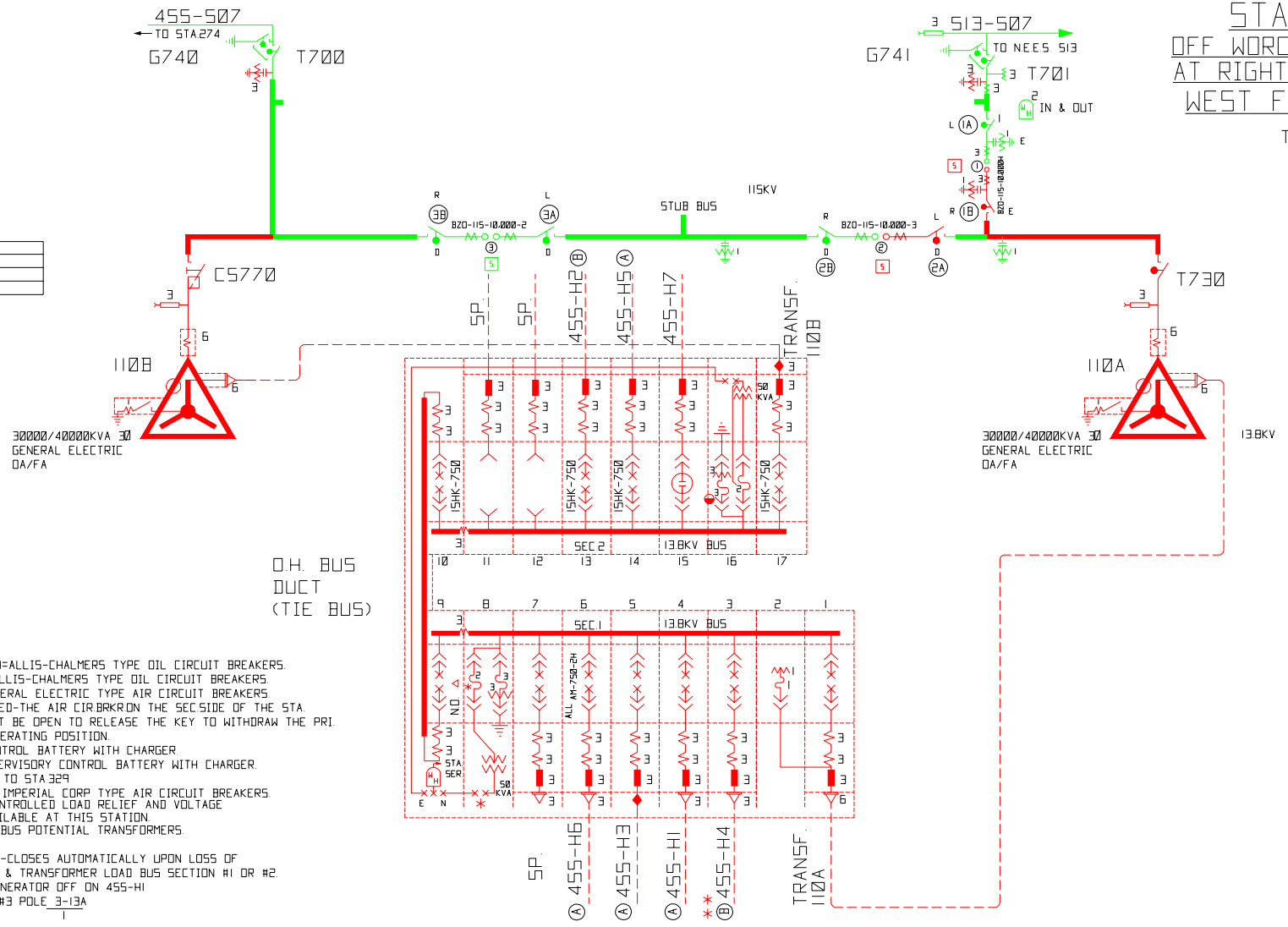

COLOR KEY

COLOR	DESCRIPTION
	DISTRIBUTION/RETAIL
	POWER SUPPLY TRANSMISSION

NOTES

BZO-115-5000-H=ALLIS-CHALMERS TYPE OIL CIRCUIT BREAKERS.
BZO-160-115F=ALLIS-CHALMERS TYPE OIL CIRCUIT BREAKERS.
AM-750-2H=GENERAL ELECTRIC TYPE AIR CIRCUIT BREAKERS.
* KEY INTERLOCKED-THE AIR CIR.BRKR ON THE SEC.SIDE OF THE STA. SER.TRANSF.MUST BE OPEN TO RELEASE THE KEY TO WITHDRAW THE PRI. FUSES FROM OPERATING POSITION.
1-130 VOLT CONTROL BATTERY WITH CHARGER.
1-48 VOLT SUPERVISORY CONTROL BATTERY WITH CHARGER.
CURRIER SMITH TO STA.329
15 HK-750=ITE IMPERIAL CORP TYPE AIR CIRCUIT BREAKERS. BOTH RADIO CONTROLLED LOAD RELIEF AND VOLTAGE REDUCTION AVAILABLE AT THIS STATION.
◒ NON-STANDARD BUS POTENTIAL TRANSFORMERS. RATIO 121:1
△ NORMALLY OPEN-CLOSES AUTOMATICALLY UPON LOSS OF BUS POTENTIAL & TRANSFORMER LOAD BUS SECTION #1 OR #2.
** MWRA HYDRO GENERATOR OFF ON 455-H1 RIGHT OF WAY #3 POLE 3-13A

DATE	DESCRIPTION	BY	CHCK
9/3/02	REIDENTIFIED BKRS FOR CKT 2 & CKT 3	EBA	RBB
5/29/02	REVISED DWG FROM ENGINEER'S MARK-UP	EBA	PSL
1/16/02	REVISED DWG FOR BREAKER REPLACEMENT	EBA	
6/27/00	REPLACED AUTOMATIC BKR WITH VACUUM BKR IN CUBICLE 15	WJB	

NSTAR ELECTRIC
AN NSTAR COMPANY

455

_STA.01A\Sta455.dwg, 09/03/02 at 09:28

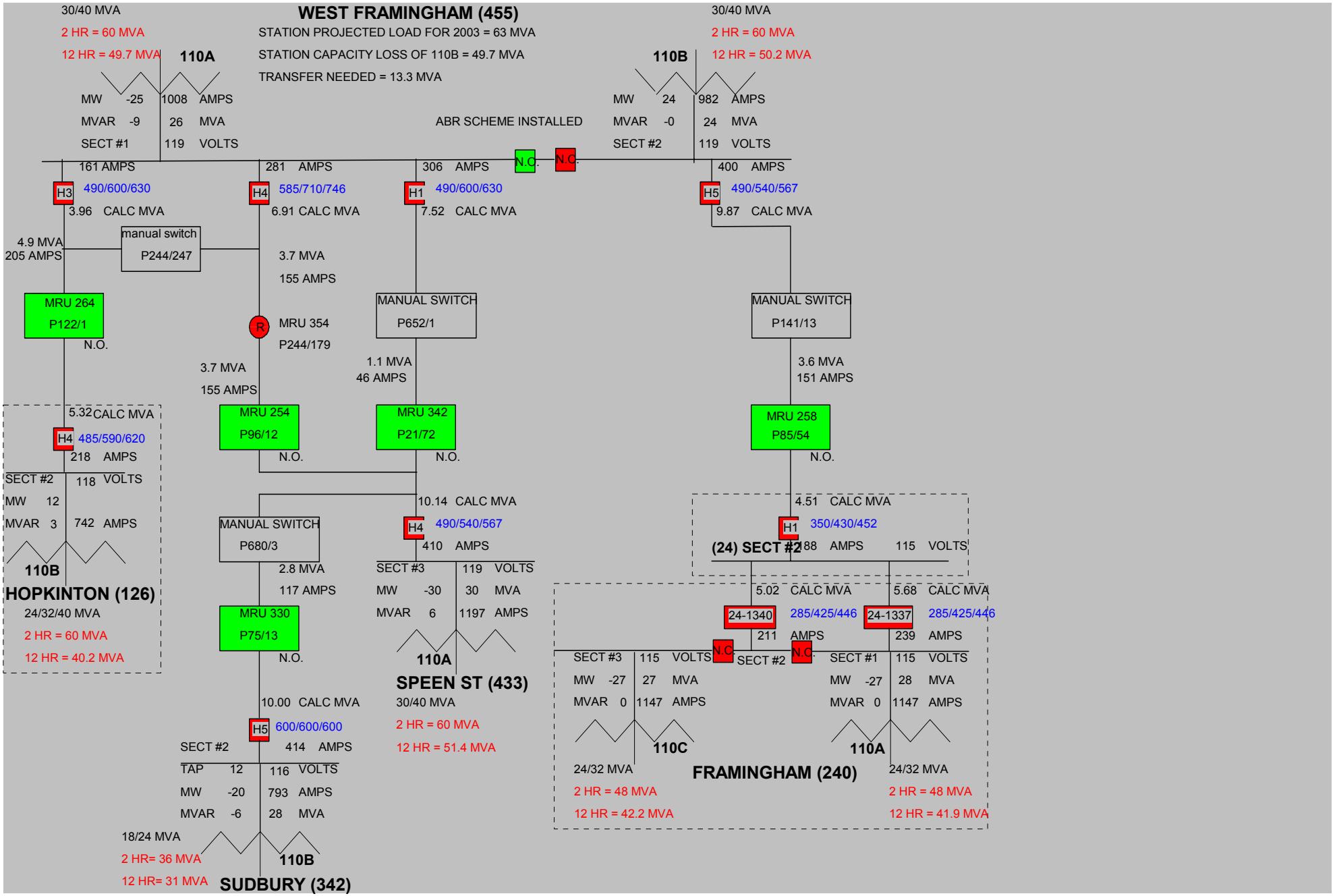
WEST FRAMINGHAM (455)
STATION PROJECTED LOAD FOR 2003 = 63 MVA
STATION CAPACITY LOSS OF 110B = 49.7 MVA
TRANSFER NEEDED = 13.3 MVA
ABR SCHEME INSTALLED
30/40 MVA
2 HR = 60 MVA
12 HR = 49.7 MVA
110A
MW -25 1008 AMPS
MVAR -9 26 MVA
SECT #1 119 VOLTS
30/40 MVA
2 HR = 60 MVA
12 HR = 50.2 MVA
110B
MW 24 982 AMPS
MVAR -0 24 MVA
SECT #2 119 VOLTS
161 AMPS
281 AMPS
306 AMPS
400 AMPS
N.O.
N.C.
H3 490/600/630
3.96 CALC MVA
H4 585/710/746
6.91 CALC MVA
H1 490/600/630
7.52 CALC MVA
H5 490/540/567
9.87 CALC MVA
4.9 MVA
205 AMPS
manual switch
P244/247
3.7 MVA
155 AMPS
MRU 264
P122/1
N.O.
R
MRU 354
P244/179
MANUAL SWITCH
P652/1
MANUAL SWITCH
P141/13
3.7 MVA
155 AMPS
1.1 MVA
46 AMPS
3.6 MVA
151 AMPS
5.32 CALC MVA
H4 485/590/620
218 AMPS
SECT #2 118 VOLTS
MW 12
MVAR 3 742 AMPS
110B
HOPKINTON (126)
24/32/40 MVA
2 HR = 60 MVA
12 HR = 40.2 MVA
MRU 254
P96/12
N.O.
MRU 342
P21/72
N.O.
MRU 258
P85/54
N.O.
10.14 CALC MVA
H4 490/540/567
410 AMPS
SECT #3 119 VOLTS
MW -30 30 MVA
MVAR 6 1197 AMPS
110A
SPEEN ST (433)
30/40 MVA
2 HR = 60 MVA
12 HR = 51.4 MVA
MANUAL SWITCH
P680/3
2.8 MVA
117 AMPS
MRU 330
P75/13
N.O.
10.00 CALC MVA
H5 600/600/600
SECT #2 414 AMPS
TAP 12 116 VOLTS
MW -20 793 AMPS
MVAR -6 28 MVA
18/24 MVA
2 HR= 36 MVA
12 HR= 31 MVA
110B
SUDBURY (342)
4.51 CALC MVA
H1 350/430/452
(24) SECT #2 188 AMPS 115 VOLTS
5.02 CALC MVA
24-1340 285/425/446
211 AMPS
5.68 CALC MVA
24-1337 285/425/446
239 AMPS
N.C.
SECT #2
N.C.
SECT #3 115 VOLTS
MW -27 27 MVA
MVAR 0 1147 AMPS
110C
24/32 MVA
2 HR = 48 MVA
12 HR = 42.2 MVA
FRAMINGHAM (240)
SECT #1 115 VOLTS
MW -27 28 MVA
MVAR 0 1147 AMPS
110A
24/32 MVA
2 HR = 48 MVA
12 HR = 41.9 MVA

Somerville District

Bulk Substation Transformer Outages

Distribution Supply Line Outages

Thermal Results and Remedial Switching Actions

2003 T&D OPERATING STUDY
SOMERVILLE DISTRICT

STATION #211 WOBURN

Transformer #110A: Cooper Power Systems 24/32/40 MVA 117/14.4kV
Transformer #110B: Cooper Power Systems 24/32/40 MVA 117/14.4kV
Transformer #110C: North American 24/32/40 MVA 117/14.4kV
Transformer #110D: North American 24/32/40 MVA 117/14.4kV

Overload Ratings:

Transformer		12 hour LTE, 90F Ambient	12 hour LTE, 110F Ambient
110A	24/32/40 MVA	51 MVA	47 MVA
110B	24/32/40 MVA	51 MVA	47 MVA
110C	24/32/40 MVA	47 MVA	43 MVA
110D	24/32/40 MVA	47 MVA	43 MVA

Station Capabilities:

Total Station Capacity (N)	Station Firm Capacity (LTE)	RADSEC Transfer		Total LCC
160 MVA	124 MVA	15 MVA	0 MVA	139 MVA

Switching Actions:

Loss of Transformer #110A:

Open: Circuit Breakers #3 and #5 in Woburn 115kV Ring Bus
Main 110A 13.8kV Circuit Breaker
Disconnect Switch #T732
Close: ABR Scheme Closes 13.8kV Bus Tie Automatically
Circuit Breakers #3 and #5 to restore Woburn 115kV Ring Bus

Loss of Transformer #110B:

Open: Circuit Breakers #4 and #6 in Woburn 115kV Ring Bus
Main 110B 13.8kV Circuit Breaker
Disconnect Switch #T733
Close: ABR Scheme Closes 13.8kV Bus Tie Automatically
Circuit Breakers #4 and #6 to restore Woburn 115kV Ring Bus

Loss of Transformer #110C:

Open: Circuit Breakers #7 and #11 in Woburn 115kV Ring Bus
Main 110C 13.8kV Circuit Breaker
Disconnect Switch #T731
Close: ABR Scheme Closes 13.8kV Bus Tie Automatically
Circuit Breakers #7 and #11 to restore Woburn 115kV Ring Bus

Loss of Transformer #110D:

Open: Circuit Breakers #15 and #16 in Woburn 115kV Ring Bus
Main 110D 13.8kV Circuit Breaker
Disconnect Switch #T734
Close: ABR Scheme Closes 13.8kV Bus Tie Automatically
Circuit Breakers #15 and #16 to restore Woburn 115kV Ring Bus

For loss of either transformer, transfer of the following DSS lines via RADSEC switches may also be required:

Woburn 211-H7 to N. Woburn 375-H2 via RADSEC MRU 825 for a transfer of 3.1 MVA
Woburn 211-H12 to N. Woburn 375-H8 via RADSEC MRU 106 for a transfer of 3.5 MVA
Woburn 211-H10 to Burlington 391-H11 via RADSEC MRU 193 for a transfer of 6.8 MVA
Woburn 211-H13 to Burlington 391-H11 via RADSEC MRU 189 and 391-H9 via RADSEC MRU 825 for a transfer of 8.8 MVA

Total Transfer: 15.5 MVA

Results:

Loading - For the 211-H7 to 375-H2 load transfer there may be heavy loading conditions in the 500 kcmil station getaway of 375-H2, but is below applicable emergency ratings.

For the 211-H12 to 375-H8 load transfer there may be heavy loading conditions in the 500 kcmil station getaway of 375-H8, but is below the applicable emergency ratings.

For the 211-H10 / 211-H13 to 391-H9 / 391-H11 load transfers there may be heavy loading conditions on sections of 391-H9 and 391-H11 with 336 ACSR conductor, but is within applicable emergency ratings.

Voltage The 211-H10 / 211-H13 to 391-H9 / 391-H11 load transfer, the installation of-switched capacitor banks may be required for post-contingency voltage remediation.

Additional Actions Required: None

STATION 211
COVE STREET
WOBURN
WOBURN RING
PAGE 1

TEL.# (617) 369-5441

115 KV., 345 KV.
13,800 VOLT WIRING
(IN PART)

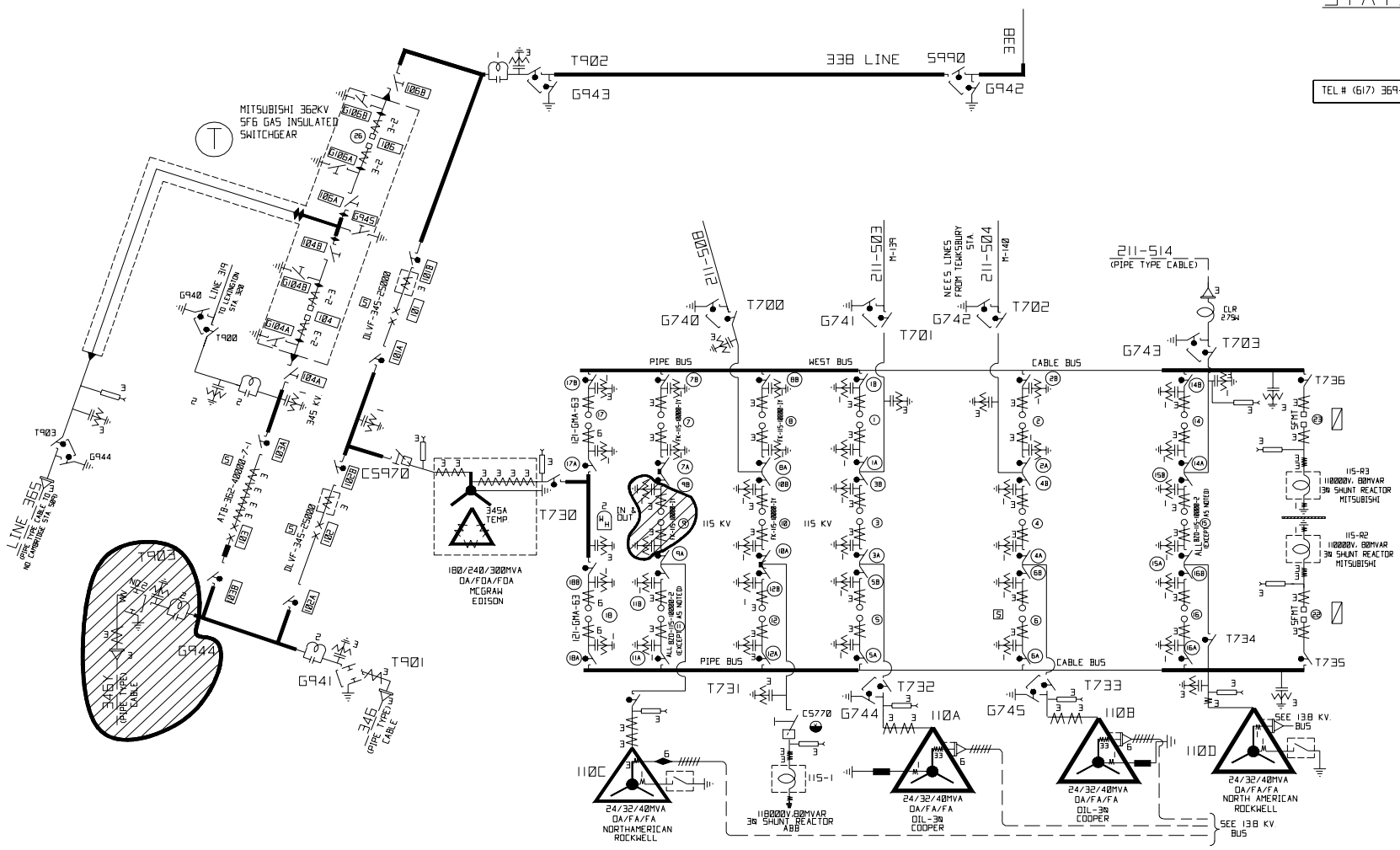

NOTES:

FK-115-10000-1Y=G.E. OIL CIRCUIT BREAKERS
BZO-115-10000-2=ALLIS CHALMERS OIL CIRCUIT BREAKERS
DLVF-345-250000=BROWN BOVERI AIR BLAST CIRCUIT BREAKERS.
ATB-362-40000-7-1=G.E. AIR BLAST CIR. BREAKER.
121-GMA-63=WEST OIL CIRCUIT BREAKERS.
OZ-23-250=ALLIS CHALMERS OIL CIRCUIT BREAKERS
FSV-750B SIEMENS ALLIS VACUUM CIRCUIT BREAKER

CS2020 CIRCUIT SWITCHER EQUIPED WITH SHUNT TRIP DEVICE.

NOT IN SERVICE

SFMT - MITSUBISHI 115KV, 3000A, 63KA
SF6 BREAKER TYPE 100SMFT63F

NSTAR ELECTRIC
AN NSTAR COMPANY

DATE	DESCRIPTION	BY	CHCK
10/9/01	UPDATED PER FIELD PRINT	EBA	
7/14/00	UPDATED PER FIELD PRINT	WJB	HWL

211

_STA_DIA\Sta211elev.dwg, 10/09/01 at 0816

STATION 211

COVE STREET
WOBURN
WOBURN RING
PAGE 2

TEL # (617)-369-5541
(781)-933-2006

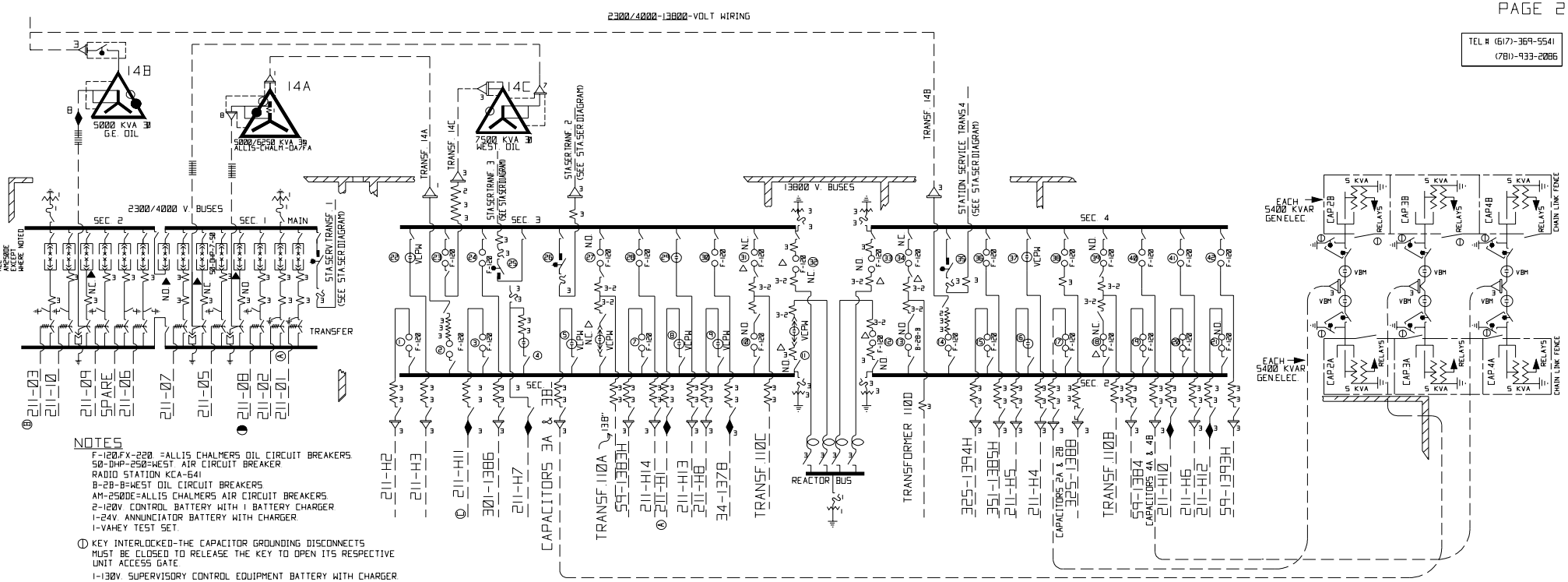

NOTES

F-120,FX-220 =ALLIS CHALMERS OIL CIRCUIT BREAKERS.
50-OHP-250=WEST. AIR CIRCUIT BREAKER.
RADIO STATION KCA-641
B-2B-B=WEST OIL CIRCUIT BREAKERS.
AM-250DE=ALLIS CHALMERS AIR CIRCUIT BREAKERS.
2-120V. CONTROL BATTERY WITH 1 BATTERY CHARGER.
1-24V. ANNUNCIATOR BATTERY WITH CHARGER.
1-VAHEY TEST SET.

(1) KEY INTERLOCKED-THE CAPACITOR GROUNDING DISCONNECTS MUST BE CLOSED TO RELEASE THE KEY TO OPEN ITS RESPECTIVE UNIT ACCESS GATE.

1-130V. SUPERVISORY CONTROL EQUIPMENT BATTERY WITH CHARGER.
NO 13.8 KV RECLOSING
RADIO CONTROLLED LOAD RELIEF AVAILABLE AT THIS STATION.

◓ NO LOAD
VBM=JOSLYN VACUUM BREAKERS.

△ 14KV ABR SCHEME - ON LOSS OF TRANSFORMER SOURCE TO ANY 14KV BUS SECTION THE NORMALLY OPEN BUS SECTION TO THE REACTOR TIE BUS BREAKERS WILL AUTOMATICALLY CLOSE.

▲ 4KV ABR SCHEME - EITHER TRANSFORMER 14A OR 14C CAN BE SELECTED AS THE PREFERRED SUPPLY TO 4KV BUS SECTION 1.
ON LOSS OF SUPPLY TO 4KV BUS SECTION 1, THE ALTERNATE 4KV TRANSFORMER SECONDARY BREAKER WILL CLOSE.
ON LOSS OF SUPPLY TO 4KV BUS SECTION 2, THE 4KV 1-2 BUS TIE BREAKER WILL CLOSE, THE N.O. TRANSFORMER SECONDARY BREAKER ON 4KV BUS SECTION 1 WILL CLOSE, AND THE 14KV SECTION 1 TO THE REACTOR TIE BUS BREAKER WILL CLOSE.

VCPW = CUTLER HAMMER VACUUM CIRCUIT BREAKERS.

DATE	DESCRIPTION	BY	CHCK
10/9/02	RELOCATED U#22 TO U#5 AND ADDED LINE 211-H3 TO U#22	EBA	LJM
8/6/02	REPLACED TR 14A WITH RETIRED XFMR FROM STA. 469	EBA	RBB
6/24/02	REVISED DWG. FROM ENGINEER'S MARK-UP	EBA	RBB
10/26/00	SWITCHED POSITIONS OF LINE 211-H7 WITH 211-H13	WJB	DEF

NSTAREELECTRIC
AN NSTAR COMPANY

211

211-H7 to 375-H2 load transfer. 375-H2 has a heavily loaded feeder section (104% which is within its emergency capability and acceptable for an emergency transfer).

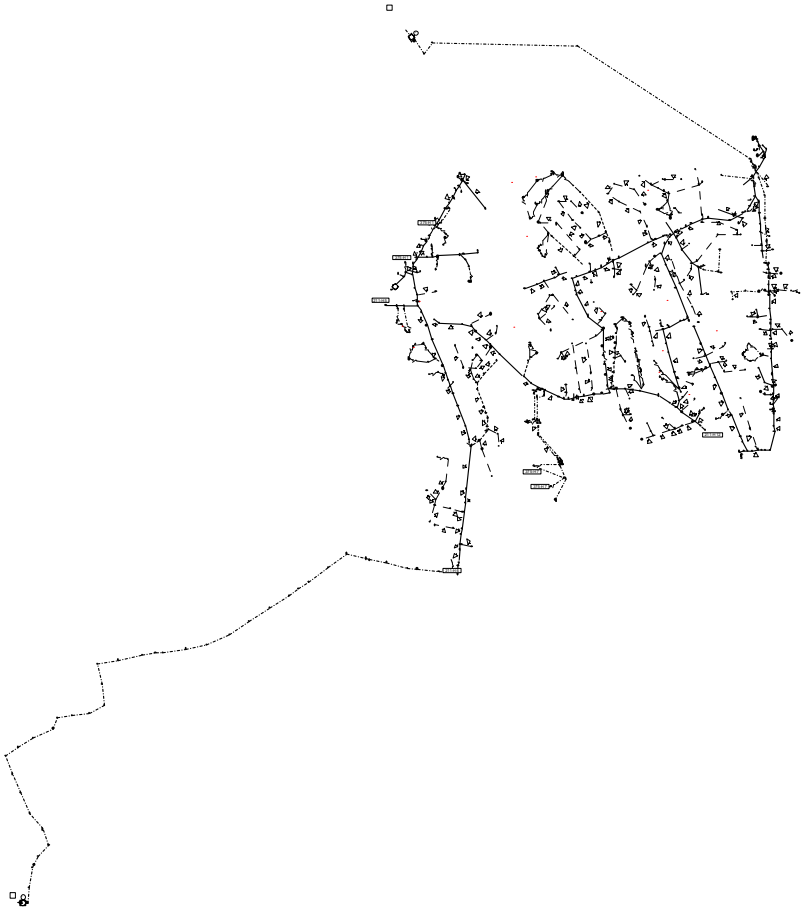

Voltage Drop Summary

Feeder	**211-H7**
Substation	STA211
Source Voltage	14.28 kVLL, 0.00 Deg.

Parameters

Analysis Type	Unbalanced Voltage Drop
Flag Levels	Summer, Nominal
Load Model	Nominal
Load Factor	1.00 x (kW) 1.00 x (kVAR)

Load Summary

	Total Load			
	kW	kVAR	kVA	PF(%)
Total load read (Non-adjusted)	3029.78	1022.4	3197.63	94.75
Total load used (Adjusted)	3029.76	1022.39	3197.62	94.75
Total shunt capacitor (Adjusted)		1428.38		
Total shunt reactor (Adjusted)		0		
Total load from motor	0	0	0	0
Total power from generator	0	0	0	0
Total power to other feeder(s) (Loop)	0	0	0	0
Total conductor capacitances		247.34		
Total losses	35.88	37.82	52.14	68.82
Total power from substation	3065.65	-615.51	3126.82	-98.04

Abnormal Conditions

	Phase	Count	Worst Condition	%
	A	0	1100238-421	45.32
Overload	B	0	1100238-421	32.57
	C	0	1100238-421	31.11
	A	0	1100238-6	100.84
Low Voltage	B	0	1100238-6	103.08
	C	0	1100238-6	103.36
	A	0	1100238-421	103.48
High Voltage	B	0	1100238-421	103.48
	C	0	1100238-383	104.09

Voltage Drop Summary

Feeder	**375-H2**
Substation	STA375
Source Voltage	14.28 kVLL, 0.00 Deg.

Parameters

Analysis Type	Unbalanced Voltage Drop
Flag Levels	Summer, Nominal
Load Model	Nominal
Load Factor	1.00 x (kW) 1.00 x (kVAR)

Load Summary

	Total Load			
	kW	kVAR	kVA	PF(%)
Total load read (Non-adjusted)	7649.02	6873.33	10283.49	74.38
Total load used (Adjusted)	7648.63	6872.97	10282.96	74.38
Total shunt capacitor (Adjusted)		4176.65		
Total shunt reactor (Adjusted)		0		
Total load from motor	0	0	0	0
Total power from generator	0	0	0	0
Total power to other feeder(s) (Loop)	0	0	0	0
Total conductor capacitances		280.49		
Total losses	148.83	184.24	236.85	62.84
Total power from substation	7797.46	2600.07	8219.54	94.86

Abnormal Conditions

	Phase	Count	Worst Condition	%
	A	0	1100692-206	81.78
Overload	B	7	1100692-206	104.34
	C	5	1100692-206	100.4
	A	0	1100692-220	101.85
Low Voltage	B	0	1100692-220	99.33
	C	0	1100692-220	99.62
	A	0	1100692-1	103.48
High Voltage	B	0	1100692-1	103.48
	C	0	1100692-1	103.48

Feeder Id	Section Id	Equipment Id	Phase	VA	VB	VC	VA (kVLN)	VB (kVLN)	VC (kVLN)	IA (Amps)	IB (Amps)	IC (Amps)	Load A (%)	Load B (%)	Load C (%)	Thru Power A (kW)	Thru Power B (kW)	Thru Power C (kW)	Thru Power A (kVAR)	Thru Power B (kVAR)	Thru Power C (kVAR)
375-H2	1100692-3	500/3	ABC	124.1	123.9	123.8	8.2	8.2	8.2	284.6	363.5	349.6	81	104	100	2239	2839	2710	699.4	942.9	963.6
375-H2	1100692-4	500/3	ABC	124.1	123.2	123.1	8.2	8.2	8.2	284.6	363.5	349.7	81	104	100	2239	2837	2709	700.3	944.1	963.3
375-H2	1100692-10	500/3	ABC	124	122.3	122	8.2	8.1	8.1	285.2	364.1	350.3	82	104	100	2239	2822	2696	709.4	955.3	960.6
375-H2	1100692-24	500/3	ABC	123.9	122.1	121.9	8.2	8.1	8.1	286	364.9	351.1	82	104	100	2240	2799	2678	722.1	970.8	956.3
375-H2	1100692-72	500/3	ABC	123.9	122	121.9	8.2	8.1	8.1	286	365	351.2	82	104	100	2239	2796	2678	723.9	968.9	954.6
375-H2	1100692-110	500/3	ABC	123.8	121.8	121.9	8.2	8.1	8.1	286.1	365	351.2	82	104	100	2238	2793	2678	725.4	967.2	953.1
375-H2	1100692-206	500/3	ABC	123.8	121.5	121.7	8.2	8.1	8.1	286.2	365.2	351.4	82	104	100	2237	2787	2677	728.8	966.6	950.6

211-H12 to 375-H8 load transfer. 375-H8 has a heavily loaded feeder section (120% which is within its emergency capability and acceptable for an emergency transfer).

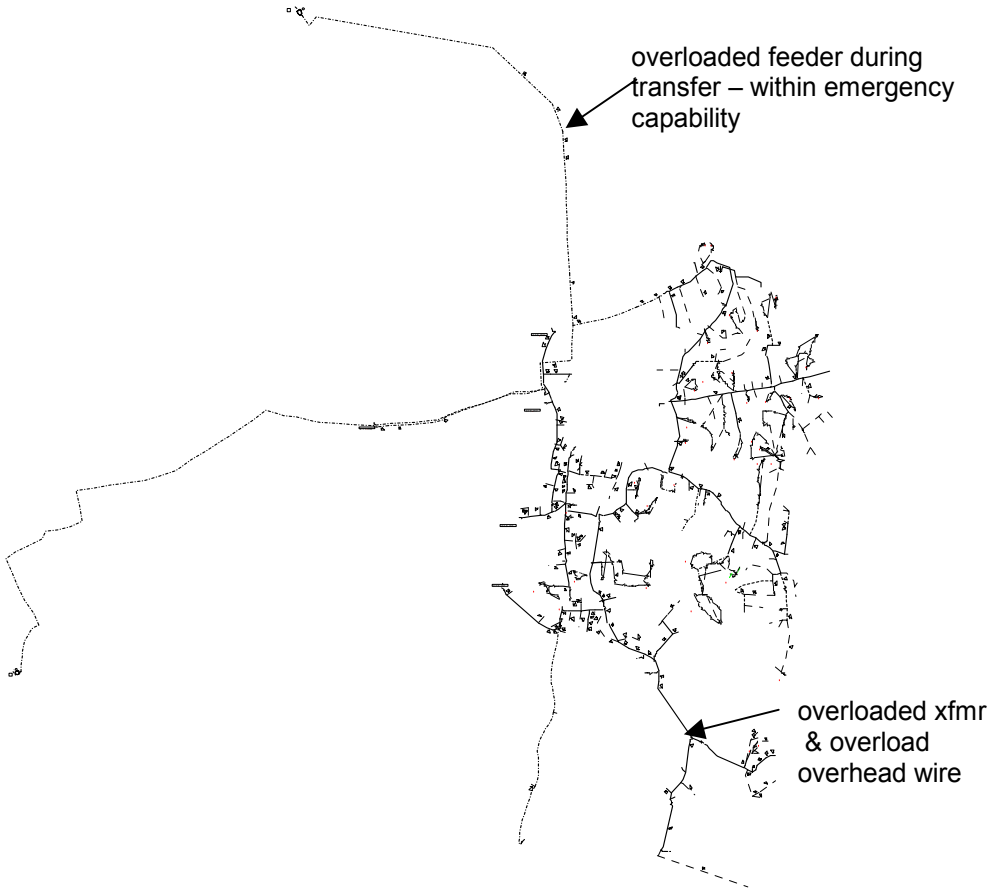

Voltage Drop Summary

Feeder	**211-H12**
Substation	STA211
Source Voltage	14.28 kVLL, 0.00 Deg.

Parameters

Analysis Type	Unbalanced Voltage Drop
Flag Levels	Summer, Nominal
Load Model	Nominal
Load Factor	1.00 x (kW) 1.00 x (kVAR)

Load Summary

	Total Load			
	kW	kVAR	kVA	PF(%)
Total load read (Non-adjusted)	3910.95	203.32	3916.23	99.87
Total load used (Adjusted)	3909.99	203.23	3915.27	99.87
Total shunt capacitor (Adjusted)		0		
Total shunt reactor (Adjusted)		0		
Total load from motor	0	0	0	0
Total power from generator	0	0	0	0
Total power to other feeder(s) (Loop)	0	0	0	0
Total conductor capacitances		368.24		
Total losses	32.89	493.42	494.52	6.65
Total power from substation	3942.88	328.4	3956.53	99.65

Abnormal Conditions

	Phase	Count	Worst Condition	%
	A	0	1100233-27	33.51
Overload	B	0	1100233-27	35.37
	C	0	1100233-27	37.27
	A	0	1100233-231	101.52
Low Voltage	B	0	1100233-174	101.85
	C	0	1100233-125	101.44
	A	0	1100233-328	103.48
High Voltage	B	0	1100233-328	103.48
	C	0	1100233-328	103.48

Voltage Drop Summary

Feeder	**375-H8**
Substation	STA375
Source Voltage	14.28 kVLL, 0.00 Deg.

Parameters

Analysis Type	Unbalanced Voltage Drop
Flag Levels	Summer, Nominal
Load Model	Nominal
Load Factor	1.00 x (kW) 1.00 x (kVAR)

Load Summary

	Total Load			
	kW	kVAR	kVA	PF(%)
Total load read (Non-adjusted)	8990.81	5581.64	10582.51	84.96
Total load used (Adjusted)	8991.57	5582.73	10583.72	84.96
Total shunt capacitor (Adjusted)		2176.18		
Total shunt reactor (Adjusted)		0		
Total load from motor	0	0	0	0
Total power from generator	0	0	0	0
Total power to other feeder(s) (Loop)	0	0	0	0
Total conductor capacitances		512.21		
Total losses	453.08	605.51	756.26	59.91
Total power from substation	9444.65	3499.84	10072.25	93.77

Abnormal Conditions

	Phase	Count	Worst Condition	%
	A	20	1100698-852	115.59
Overload	B	20	1100698-393	115.44
	C	25	1100698-350	120.31
	A	0	1100233-442	95.59
Low Voltage	B	0	1100698-675	95.39
	C	0	1100233-442	96.26
	A	0	1100698-830	103.48
High Voltage	B	0	1100698-830	103.48
	C	0	1100698-830	103.48

Feeder Id	Section Id	Equipment Id	Phase	VA	VB	VC	VA (kVLN)	VB (kVLN)	VC (kVLN)	IA (Amps)	IB (Amps)	IC (Amps)	Load A (%)	Load B (%)	Load C (%)	Thru Power A (kW)	Thru Power B (kW)	Thru Power C (kW)	Thru Power A (kVAR)	Thru Power B (kVAR)	Thru Power C (kVAR)
375-H8	1100698-329	500/3	ABC	124	124	123.9	8.2	8.2	8.2	402.7	402.9	416.5	115	115	119	3104	3106	3226	1170	1168	1163
375-H8	1100698-328	500/3	ABC	123.9	123.9	123.9	8.2	8.2	8.2	402.8	402.9	416.5	115	115	119	3103	3105	3225	1170	1168	1163
375-H8	1100698-739	500/3	ABC	123	122.9	122.7	8.2	8.2	8.1	402.9	403	416.6	115	115	119	3102	3103	3223	1170	1168	1163
375-H8	1100698-393	500/3	ABC	122.5	122.5	122.1	8.1	8.1	8.1	403.9	404.1	417.6	115	115	119	3083	3082	3196	1171	1175	1163
375-H8	1100698-394	500/3	ABC	122.5	122.4	122	8.1	8.1	8.1	404.4	401.4	418.1	116	115	119	3075	3052	3185	1172	1158	1163
375-H8	1100698-395	500/3	ABC	122.4	122.4	122	8.1	8.1	8.1	404.5	396.2	418.1	116	113	120	3073	3017	3182	1172	1125	1163
375-H8	1100698-852	500/3	ABC	122.3	122.3	121.8	8.1	8.1	8.1	404.6	396.3	418.2	116	113	120	3072	3016	3180	1171	1126	1163
375-H8	1100698-854	500/3	ABC	122.1	122.1	121.6	8.1	8.1	8.1	400	390.7	418.4	114	112	120	3036	2976	3175	1146	1091	1164
375-H8	1100698-855	500/3	ABC	122	122	121.5	8.1	8.1	8.1	400.1	390.8	418.5	114	112	120	3034	2975	3173	1146	1092	1164
375-H8	1100698-835	500/3	ABC	121.9	121.9	121.4	8.1	8.1	8.1	400.2	390.9	418.6	114	112	120	3032	2973	3170	1145	1092	1164
375-H8	1100698-401	500/3	ABC	121.8	121.9	121.3	8.1	8.1	8.1	400.3	391	418.7	114	112	120	3030	2971	3167	1145	1093	1164
375-H8	1100698-402	500/3	ABC	121.7	121.8	121.1	8.1	8.1	8	400.4	391.1	418.8	114	112	120	3028	2970	3164	1145	1094	1164
375-H8	1100698-848	500/3	ABC	121.5	121.6	120.9	8.1	8.1	8	400.6	391.3	419	115	112	120	3025	2967	3159	1145	1095	1165
375-H8	1100698-847	500/3	ABC	121.4	121.5	120.8	8.1	8.1	8	400.7	391.4	419.1	115	112	120	3023	2965	3156	1144	1096	1165
375-H8	1100698-392	500/3	ABC	121.3	121.4	120.7	8.1	8.1	8	400.8	391.5	419.2	115	112	120	3021	2963	3154	1144	1096	1165
375-H8	1100698-391	500/3	ABC	121.2	121.3	120.5	8	8.1	8	399.8	378.8	420.7	114	108	120	3003	2872	3151	1161	1039	1194
375-H8	1100698-849	500/3	ABC	121	121.2	120.3	8	8	8	400	373.5	420.8	114	107	120	3000	2835	3146	1159	1005	1192
375-H8	1100698-834	500/3	ABC	120.9	121.2	120.2	8	8	8	400.1	373.6	420.9	114	107	120	2998	2834	3143	1158	1005	1193
375-H8	1100698-833	500/3	ABC	120.8	121.1	120.1	8	8	8	400.2	373.7	421	114	107	120	2996	2833	3141	1158	1006	1193
375-H8	1100698-350	500/3	ABC	120.7	121.1	120	8	8	8	400.2	373.8	421.1	114	107	120	2994	2832	3138	1157	1007	1194
375-H8	1100233-390	3-2_CU	ABC	119.1	120	119.5	2.4	2.4	2.4	166.2	57.6	212	83	29	106	395.4	138	507.1	26	10.8	18.6
375-H8	1100233-391	3-2_CU	ABC	119	119.9	119.4	2.4	2.4	2.4	166.2	57.6	212	83	29	106	395.2	137.9	506.5	25.7	10.8	18.3
375-H8	1100233-393	3-2_CU	ABC	119	119.9	119.3	2.4	2.4	2.4	166.2	57.6	212	83	29	106	395.2	137.9	506.4	25.7	10.8	18.2
375-H8	1100233-399	3-2_CU	ABC	118.3	119.8	117.5	2.4	2.4	2.4	166.2	57.6	212	83	29	106	395.1	137.9	506	25.5	10.8	18
375-H8	1100233-403	3-2_CU	ABC	118.3	119.7	117.4	2.4	2.4	2.3	166.2	57.6	212	83	29	106	393	137.7	498.3	22.2	11.1	14

211-H10 and 211-H13 to 391-H9 and 391-H11 load transfer. 391-H9 has an overloaded has a heavily loaded feeder section (114% which is within its emergency capability and acceptable for an emergency transfer). 391-H11 has an overloaded has a heavily loaded feeder section (122% which is within its emergency capability and acceptable for an emergency transfer). Several areas of undervoltage can be corrected with the installation of a 1350 capacitor bank on circuit 211-H13 (section transferred to 391-H11).

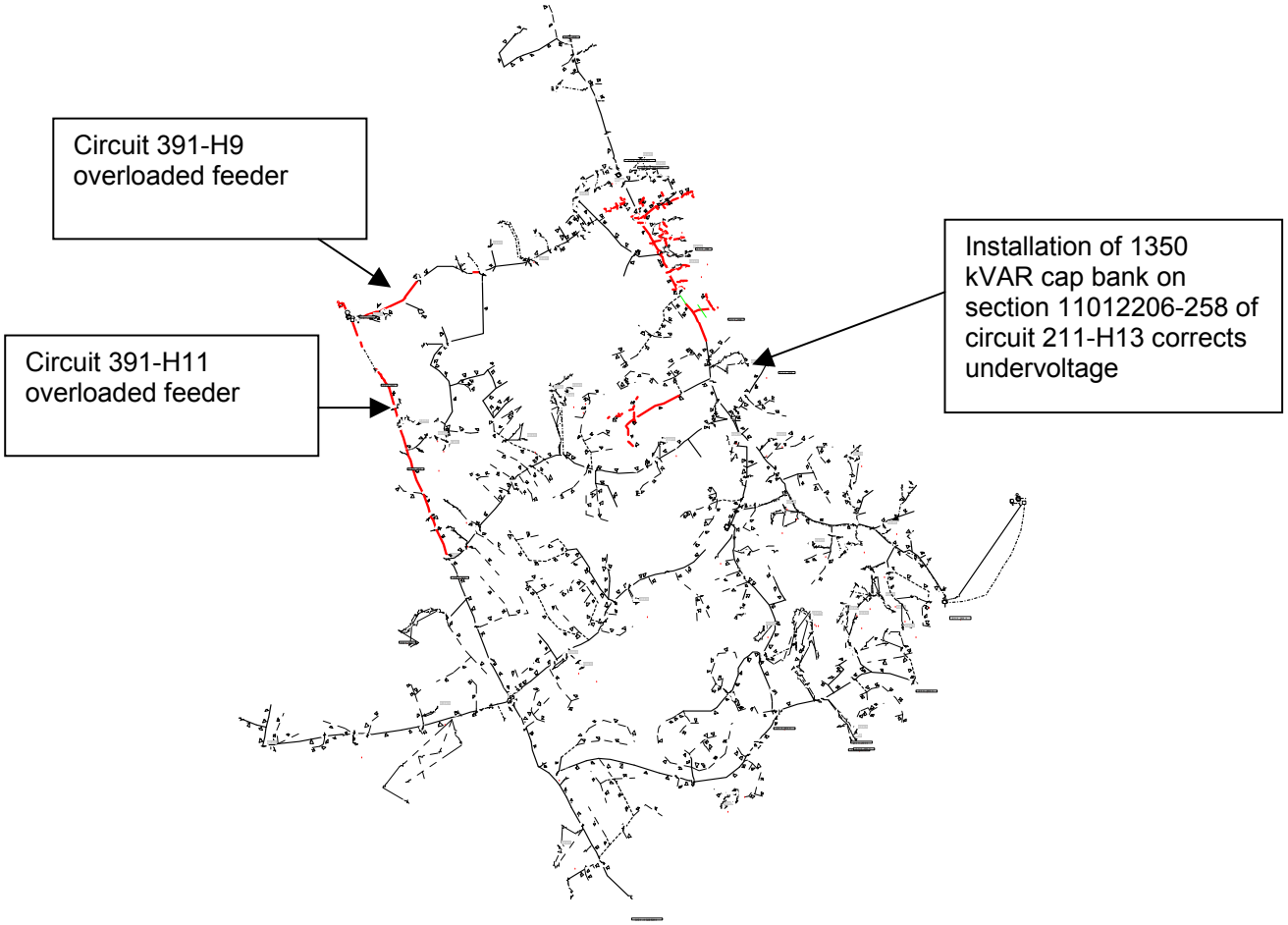

Voltage Drop Summary

Feeder	**211-H10**
Substation	STA211
Source Voltage	14.28 kVLL, 0.00 Deg.

Parameters

Analysis Type	Unbalanced Voltage Drop
Flag Levels	Summer, Nominal
Load Model	Nominal
Load Factor	1.00 x (kW) 1.00 x (kVAR)

Load Summary

	Total Load			
	kW	kVAR	kVA	PF(%)
Total load read (Non-adjusted)	3873.64	1148.3	4040.26	95.88
Total load used (Adjusted)	3873.6	1148.27	4040.21	95.88
Total shunt capacitor (Adjusted)		0		
Total shunt reactor (Adjusted)		0		
Total load from motor	0	0	0	0
Total power from generator	0	0	0	0
Total power to other feeder(s) (Loop)	0	0	0	0
Total conductor capacitances		257.51		
Total losses	46.57	50.99	69.05	67.43
Total power from substation	3920.17	941.75	4031.7	97.23

Abnormal Conditions

	Phase	Count	Worst Condition	%
	A	0	1100231-222	57.81
Overload	B	0	1100231-222	76.38
	C	0	1100231-222	52.34
	A	0	1100231-617	102.15
Low Voltage	B	0	1100231-378	100.23
	C	0	1100231-113	103.2
	A	0	1100231-52	103.48
High Voltage	B	0	1100231-52	103.48
	C	0	1100231-414	103.53

Voltage Drop Summary

Feeder	**211-H13**
Substation	STA211
Source Voltage	14.28 kVLL, 0.00 Deg.

Parameters

Analysis Type	Unbalanced Voltage Drop
Flag Levels	Summer, Nominal
Load Model	Nominal
Load Factor	1.00 x (kW) 1.00 x (kVAR)

Load Summary

	Total Load			
	kW	kVAR	kVA	PF(%)
Total load read (Non-adjusted)	3362.1	2104.18	3966.27	84.77
Total load used (Adjusted)	3360.52	2103.23	3964.43	84.77
Total shunt capacitor (Adjusted)		1426.63		
Total shunt reactor (Adjusted)		0		
Total load from motor	0	0	0	0
Total power from generator	0	0	0	0
Total power to other feeder(s) (Loop)	0	0	0	0
Total conductor capacitances		100.48		
Total losses	32.69	48.29	58.31	56.06
Total power from substation	3393.21	624.41	3450.18	98.35

Abnormal Conditions

	Phase	Count	Worst Condition	%
	A	0	1101206-631	55.9
Overload	B	0	1101206-423	28.47
	C	0	1101206-746	15.47
	A	0	1101206-654	100.83
Low Voltage	B	0	1101206-402	103.05
	C	0	1101206-498	103.48
	A	0	1101206-498	103.48
High Voltage	B	0	1101206-498	103.48
	C	0	1101206-431	104.06

Voltage Drop Summary

Feeder	**391-H9**
Substation	STA391
Source Voltage	14.28 kVLL, 0.00 Deg.

Parameters

Analysis Type	Unbalanced Voltage Drop
Flag Levels	Summer, Nominal
Load Model	Nominal
Load Factor	1.00 x (kW) 1.00 x (kVAR)

Load Summary

	Total Load			
	kW	kVAR	kVA	PF(%)
Total load read (Non-adjusted)	11566.5	7088.49	13565.79	85.26
Total load used (Adjusted)	11566.04	7087.71	13564.99	85.26
Total shunt capacitor (Adjusted)		1396.08		
Total shunt reactor (Adjusted)		0		
Total load from motor	0	0	0	0
Total power from generator	0	0	0	0
Total power to other feeder(s) (Loop)	0	0	0	0
Total conductor capacitances		106.08		
Total losses	256.98	405.63	480.18	53.52
Total power from substation	11823.01	5991.19	13254.36	89.2

Abnormal Conditions

	Phase	Count	Worst Condition	%
	A	4	1100734-250	104.15
Overload	B	9	1100734-250	109.72
	C	4	1100734-263	114.36
	A	0	1100734-31	99.55
Low Voltage	B	0	1100734-7	98.54
	C	0	1100734-35	99.3
	A	0	1100734-271	103.48
High Voltage	B	0	1100734-271	103.48
	C	0	1100734-271	103.48

Voltage Drop Summary

Feeder	**391-H11**
Substation	STA391
Source Voltage	14.28 kVLL, 0.00 Deg.

Parameters

Analysis Type	Unbalanced Voltage Drop
Flag Levels	Summer, Nominal
Load Model	Nominal
Load Factor	1.00 x (kW) 1.00 x (kVAR)

Load Summary

	Total Load			
	kW	kVAR	kVA	PF(%)
Total load read (Non-adjusted)	12559.19	5077.65	13546.8	92.71
Total load used (Adjusted)	12559.65	5078.53	13547.56	92.71
Total shunt capacitor (Adjusted)		4021.21		
Total shunt reactor (Adjusted)		0		
Total load from motor	0	0	0	0
Total power from generator	0	0	0	0
Total power to other feeder(s) (Loop)	0	0	0	0
Total conductor capacitances		187.68		
Total losses	438.9	748.86	868	50.56
Total power from substation	12998.55	1618.5	13098.93	99.23

Abnormal Conditions

	Phase	Count	Worst Condition	%
	A	0	1100722-83	92.75
Overload	B	31	1100722-63	110.18
	C	31	1100722-83	122.19
	A	0	1100722-486	100.22
Low Voltage	B	0	1101206-307	98.11
	C	0	1101206-71	96.19
	A	0	1101206-354	103.9
High Voltage	B	0	1100722-2	103.48
	C	0	1100722-2	103.48

Feeder Id	Section Id	Equipment Id	Phase	VA	VB	VC	VA (kVLN)	VB (kVLN)	VC (kVLN)	IA (Amps)	IB (Amps)	IC (Amps)	Load A (%)	Load B (%)	Load C (%)	Thru Power A (kW)	Thru Power B (kW)	Thru Power C (kW)	Thru Power A (kVAR)	Thru Power B (kVAR)	Thru Power C (kVAR)
391-H9	1100734-263	3-336_AL	ABC	124	123.9	123.9	8.2	8.2	8.2	510.3	537.6	560.4	104	110	114	3757	3943	4112	1884	2012	2093
391-H9	1100734-257	3-336_AL	ABC	123.8	123.8	123.8	8.2	8.2	8.2	510.3	537.6	556.7	104	110	114	3756	3942	4085	1881	2009	2074
391-H9	1100734-255	3-336_AL	ABC	123.8	123.7	123.7	8.2	8.2	8.2	510.3	537.6	556.7	104	110	114	3753	3937	4081	1876	2004	2067
391-H9	1100734-250	3-336_AL	ABC	123.4	123.3	123.3	8.2	8.2	8.2	510.3	537.6	500.3	104	110	102	3751	3935	3681	1874	2001	1821
391-H9	1100734-246	3-336_AL	ABC	123.3	123.2	123.3	8.2	8.2	8.2	484.5	510.9	476.8	99	104	97	3562	3739	3510	1751	1872	1709
391-H9	1100734-245	3-336_AL	ABC	123.3	123.2	123.3	8.2	8.2	8.2	484.5	510.9	476.8	99	104	97	3561	3737	3509	1749	1870	1707
391-H9	1100734-244	3-336_AL	ABC	123.3	123.2	123.3	8.2	8.2	8.2	484.5	510.9	476.8	99	104	97	3560	3737	3509	1749	1869	1707
391-H9	1100734-243	3-336_AL	ABC	123	122.8	123	8.2	8.2	8.2	484.5	510.9	476.8	99	104	97	3560	3737	3509	1749	1869	1707
391-H9	1100734-231	3-336_AL	ABC	122	121.7	122.1	8.1	8.1	8.1	478	506.8	476.3	98	103	97	3298	3489	3294	2036	2155	2020

Feeder Id	Section Id	Equipment Id	Phase	VA	VB	VC	VA (kVLN)	VB (kVLN)	VC (kVLN)	IA (Amps)	IB (Amps)	IC (Amps)	Load A (%)	Load B (%)	Load C (%)	Thru Power A (kW)	Thru Power B (kW)	Thru Power C (kW)	Thru Power A (kVAR)	Thru Power B (kVAR)	Thru Power C (kVAR)
391-H11	1100722-9	3-336_AL	ABC	124	123.8	123.7	8.2	8.2	8.2	454.5	539.9	598.7	93	110	122	3738	4411	4819	125.2	504.1	984.2
391-H11	1100722-14	3-336_AL	ABC	124	123.8	123.7	8.2	8.2	8.2	454.5	539.9	598.7	93	110	122	3738	4410	4819	124.9	503.7	983.5
391-H11	1100722-16	3-336_AL	ABC	123.9	123.8	123.6	8.2	8.2	8.2	454.5	539.9	598.7	93	110	122	3738	4409	4818	123.8	502.7	981.3
391-H11	1100722-17	3-336_AL	ABC	123.9	123.7	123.6	8.2	8.2	8.2	454.5	539.9	598.7	93	110	122	3738	4408	4817	122.9	501.7	979.3
391-H11	1100722-19	3-336_AL	ABC	123.9	123.7	123.6	8.2	8.2	8.2	454.5	539.9	598.7	93	110	122	3738	4407	4815	121.5	500.3	976.3
391-H11	1100722-30	3-336_AL	ABC	123.9	123.6	123.4	8.2	8.2	8.2	454.5	539.9	598.7	93	110	122	3737	4406	4814	121	499.8	975.3
391-H11	1100722-63	3-336_AL	ABC	123.8	123.4	123.2	8.2	8.2	8.2	454.5	539.9	598.7	93	110	122	3737	4402	4810	117.4	496.2	967.6
391-H11	1100722-83	3-336_AL	ABC	123.8	123.3	123	8.2	8.2	8.2	454.5	539.2	598.7	93	110	122	3735	4391	4803	111.6	489.1	955.3
391-H11	1100722-88	3-336_AL	ABC	123.8	123.2	123	8.2	8.2	8.2	450.3	534.4	594.3	92	109	121	3700	4347	4762	99.3	476.2	938.3
391-H11	1100722-114	3-336_AL	ABC	123.8	123.1	122.8	8.2	8.2	8.2	450.3	533.3	594.3	92	109	121	3700	4338	4761	98.3	473.3	936.3
391-H11	1100722-124	3-336_AL	ABC	123.7	123	122.7	8.2	8.2	8.1	450.3	533.3	594.3	92	109	121	3699	4333	4755	95	470.1	928
391-H11	1100722-137	3-336_AL	ABC	123.7	122.9	122.6	8.2	8.2	8.1	450.3	530.9	594.3	92	108	121	3698	4312	4753	93.6	464.2	925
391-H11	1100722-154	3-336_AL	ABC	123.7	122.8	122.5	8.2	8.2	8.1	450.3	530.9	594.3	92	108	121	3698	4309	4750	90.8	461.5	919.1
391-H11	1100722-179	3-336_AL	ABC	123.6	122.7	122.2	8.2	8.1	8.1	450.3	530.9	594.3	92	108	121	3697	4306	4745	87.3	458.1	911.6
391-H11	1100722-197	3-336_AL	ABC	123.6	122.6	122.1	8.2	8.1	8.1	447.3	525	592	91	107	121	3671	4253	4720	76	442.1	897.1
391-H11	1100722-207	3-336_AL	ABC	123.6	122.5	122.1	8.2	8.1	8.1	447.3	525	592	91	107	121	3671	4251	4717	73.6	439.9	892.1
391-H11	1100722-216	3-336_AL	ABC	123.6	122.5	122	8.2	8.1	8.1	447.3	525	592	91	107	121	3670	4249	4714	71.5	437.9	887.7
391-H11	1100722-217	3-336_AL	ABC	123.6	122.5	122	8.2	8.1	8.1	447.3	525	592	91	107	121	3670	4247	4712	69.7	436.2	883.8
391-H11	1100722-219	3-336_AL	ABC	123.6	122.4	122	8.2	8.1	8.1	447.3	525	592	91	107	121	3670	4247	4712	69.5	436	883.5
391-H11	1100722-253	3-336_AL	ABC	123.5	122.2	121.7	8.2	8.1	8.1	447.3	525	592	91	107	121	3670	4246	4711	69.2	435.7	882.7
391-H11	1100722-282	3-336_AL	ABC	123.5	122	121.4	8.2	8.1	8.1	446.3	525.1	592	91	107	121	3660	4240	4703	60.4	429.5	868.8
391-H11	1100722-297	3-336_AL	ABC	123.4	121.8	121.1	8.2	8.1	8	446.3	525.1	583.7	91	107	119	3658	4232	4629	53.2	422.7	838.1
391-H11	1100722-303	3-336_AL	ABC	123.4	121.7	121	8.2	8.1	8	443.3	525.1	583.7	91	107	119	3632	4226	4621	41.3	417	826.2
391-H11	1100722-306	3-336_AL	ABC	123.4	121.6	120.9	8.2	8.1	8	443.3	525.1	583.7	91	107	119	3631	4222	4617	37.3	413.2	818.2
391-H11	1100722-318	3-336_AL	ABC	123.3	121.5	120.7	8.2	8.1	8	439.8	525.1	583.7	90	107	119	3602	4220	4614	28.2	411.3	814.2
391-H11	1100722-333	3-336_AL	ABC	123.3	121.3	120.4	8.2	8.1	8	439.8	525.1	583.7	90	107	119	3601	4216	4609	24.4	407.5	806.1
391-H11	1100722-336	3-336_AL	ABC	123.2	121.2	120.3	8.2	8	8	439.8	521.6	583.7	90	106	119	3599	4181	4600	17.1	393.7	790.4
391-H11	1100722-338	3-336_AL	ABC	123.2	121.1	120.3	8.2	8	8	439.8	521.6	583.7	90	106	119	3598	4177	4596	13.7	390.4	783.1
391-H11	1100722-340	3-336_AL	ABC	123.2	121.1	120.3	8.2	8	8	439.8	521.6	583.7	90	106	119	3598	4177	4596	13.6	390.2	782.8
391-H11	1100722-341	3-336_AL	ABC	123.2	121.1	120.3	8.2	8	8	439.8	521.6	583.7	90	106	119	3598	4177	4595	13.4	390.1	782.4
391-H11	1100722-345	3-336_AL	ABC	123.2	121.1	120.2	8.2	8	8	439.8	521.6	583.7	90	106	119	3598	4176	4595	12.7	389.4	781

2003 T&D OPERATING STUDY
SOMERVILLE DISTRICT

STATION #250 MYSTIC

Transformer #110A: General Electric 37.5 / 50 MVA Step-down and PAR 110/14.4kV
Transformer #110B: General Electric 37.5 / 50 MVA Step-down and PAR 110/14.4kV
Transformer #110C: General Electric 92 / 60 / 92 MVA 110 / 24 /18 kV*
Transformer #110D: General Electric 92 / 60 / 92 MVA 110 / 24 /18 kV*

*18kV winding is for Sithe Unit #4 Output, for which 92 MVA limit applies. 24kV winding is NSTAR load winding, for which 60 MVA limit applies.

Overload Ratings:

Transformer		12 hour LTE, 90F Ambient	
110A	37.5/50 MVA	68 MVA	62 MVA
110B	37.5/50 MVA	68 MVA	62 MVA
110C	60 MVA	80 MVA	73 MVA
110D	60 MVA	80 MVA	73 MVA

Station Capabilities:

Total Station Capacity (N)	Station Firm Capacity (LTE)	RADSEC Transfer	Manual Transfer	
220 MVA	182 MVA	0 MVA	5 MVA	187 MVA

Switching Actions:

Loss of Transformer #110A:

Open: Circuit Breakers #15 and #17 in Mystic 115kV Ring Bus
Main 110A 13.8kV Circuit Breaker on Section 1-2 Reactor Bus
Disconnect Switch #T738
Close: 13.8 kV bus-tie breakers operated normally closed.
Manually close Circuit Breakers #15 and #17 to restore Mystic 115kV Ring Bus

Loss of Transformer #110B:

Open: Circuit Breakers #2 and #3 in Mystic 115kv ring bus
Circuit Switcher #CS770
Main 110B 13.8kV Circuit Breaker on Section 3 Reactor Bus
Close: 13.8 kV bus-tie breakers operated normally closed.
Manually close Circuit Breakers #2 and #3 to restore Mystic 115kv Ring Bus

Loss of Transformer #110C:

Open: Circuit Breakers #1 and #2 in Mystic 115kV Ring Bus
Main 110C 24kVcircuit breaker on Section 2 24kV Mystic bus
Main 110C 18kV switch at Sithe Unit #4 Section #1
Close: 24 kV bus-tie breakers operated normally closed.
Circuit Breakers #1 and #2 in Mystic 115kV Ring Bus

Loss of Transformer #110D:

Open: Circuit Breakers #4 and #5 in Mystic 115kV Ring Bus
Main 110C 24kV circuit breaker on Section 1 24kV Mystic bus
Main 110C 18kV switch at Sithe Unit #4 Section #2
Close: 24 kV bus-tie breakers operated normally closed.
Circuit Breakers #4 and #5 in Mystic 115kV Ring Bus

Results:

Loading - No heavy loading conditions were identified.

Voltage - No Voltage Conditions were identified.

Additional Actions Required:

None

MYSTIC STATIONS 200 & 250

PRODUCTION STATION 200 - 25 DEXTER ST, EVERETT
SWITCHING STATION 250 - 75 ALFORD ST, BOSTON

18KV, 22KV, 115KV & 345KV WIRING

PAGE 2

TEL.# (617) 381-7212

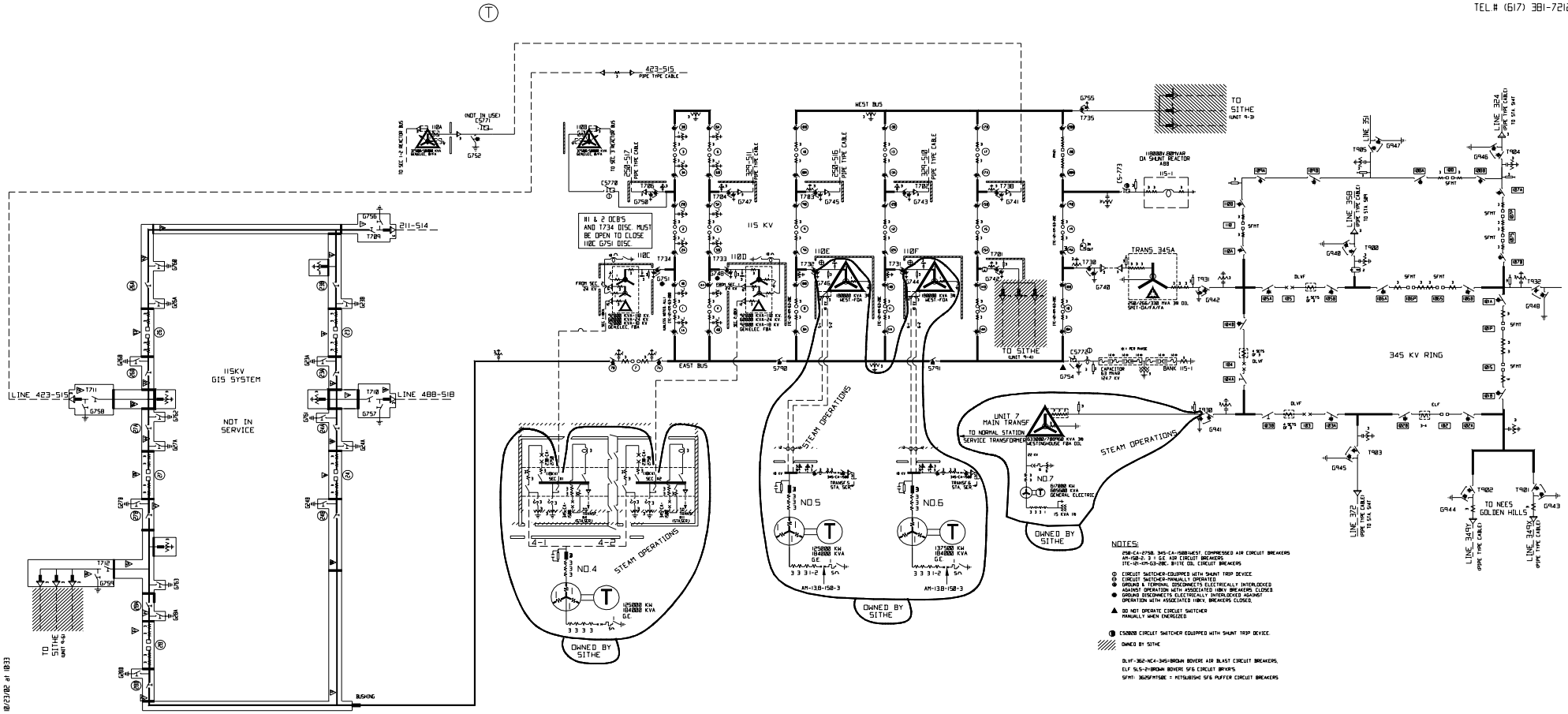

▲ - GAS ZONE 4

ALL BREAKERS, MITSUBISHI, 115KV, GIS, TYPE SFMT, 3000A, 63KA

- NORMAL PRESSURE @ 68°F
SF6 BREAKER = 71 PSI
SF6 OTHERS = 57 PSI
PNEUMATIC PRESSURE = 213 PSI

DATE	DESCRIPTION	BY	CHCK
10/11/02	ADDED SITHE 9-3 & 9-4 DESTINATIONS.	EBA	PSL
7/30/02	CHANGED G745 TO G755.	EBA	RBB
5/8/02	REVISED DWG. FROM ENGINEER'S MARK-UP.	EBA	PSL
1/29/02	REVISED DWG. FROM ENGINEER'S MARK-UPS.	EBA	
7/6/00	ADDED BREAKERS 107,110, ASSOC. SWITCHES AND POTS.(UNDER CONSTRUCTION)	WJB	DEF

NSTAR ELECTRIC
AN NSTAR COMPANY

200 & 250

MYSTIC STATIONS 200 & 250

PRODUCTION STATION 200 - 25 DEXTER ST., EVERETT
SWITCHING STATION 250 - 75 ALFORD ST., BOSTON

13.8KV & 24KV WIRING

PAGE 1

TEL.# (617) 541-7136
TEL.# (617) 541-7137

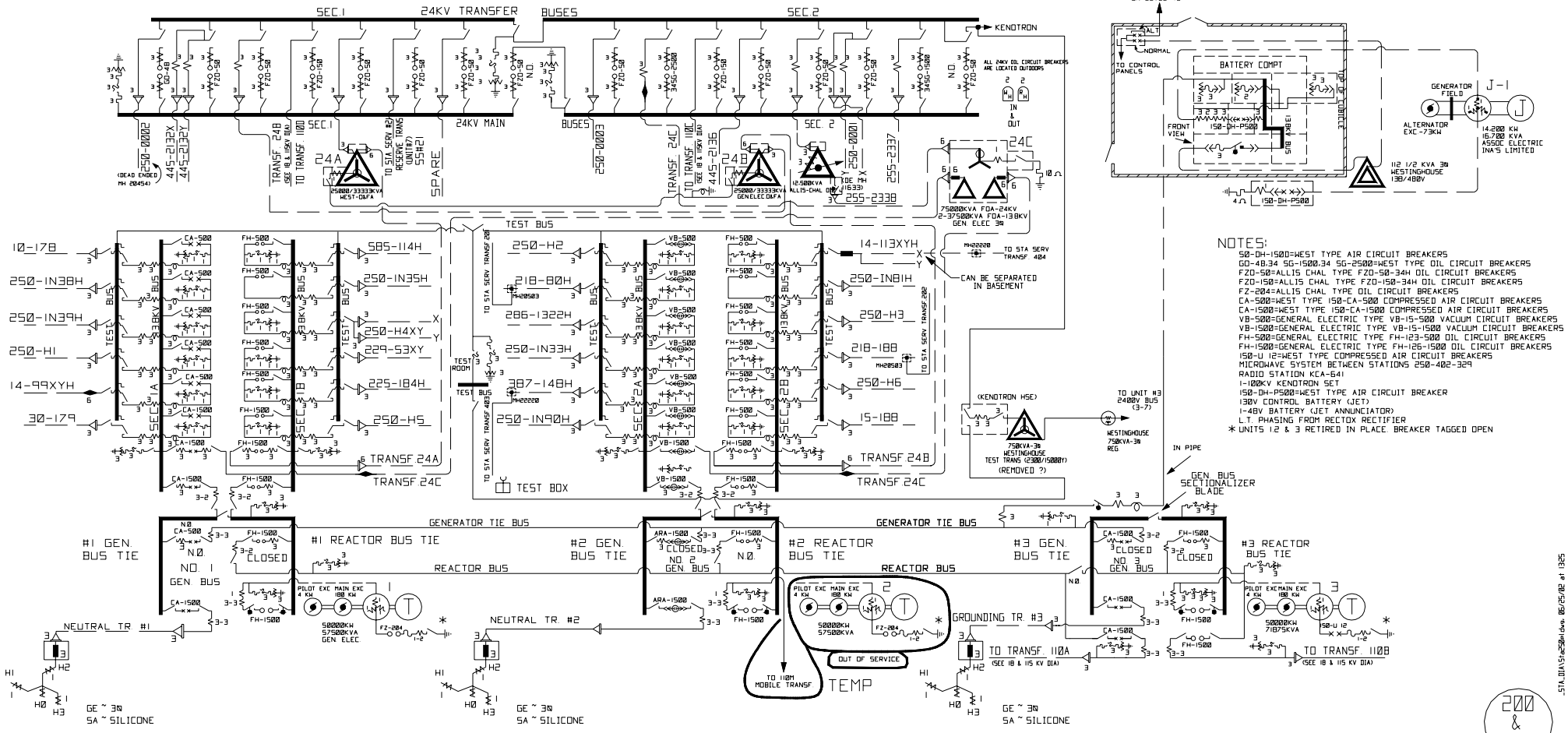

NOTES:
50-DH-150D=WEST TYPE AIR CIRCUIT BREAKERS
GO-48,34 SG-1500,34 SG-2500=WEST TYPE OIL CIRCUIT BREAKERS
FZO-50=ALLIS CHAL TYPE FZO-50-34H OIL CIRCUIT BREAKERS
FZO-150=ALLIS CHAL TYPE FZO-150-34H OIL CIRCUIT BREAKERS
FZ-204=ALLIS CHAL TYPE OIL CIRCUIT BREAKERS
CA-500=WEST TYPE 150-CA-500 COMPRESSED AIR CIRCUIT BREAKERS
CA-1500=WEST TYPE 150-CA-1500 COMPRESSED AIR CIRCUIT BREAKERS
VB-500=GENERAL ELECTRIC TYPE VB-15-500 VACUUM CIRCUIT BREAKERS
VB-1500=GENERAL ELECTRIC TYPE VB-15-1500 VACUUM CIRCUIT BREAKERS
FH-500=GENERAL ELECTRIC TYPE FH-123-500 OIL CIRCUIT BREAKERS
FH-1500=GENERAL ELECTRIC TYPE FH-126-1500 OIL CIRCUIT BREAKERS
150-U 12=WEST TYPE COMPRESSED AIR CIRCUIT BREAKERS
MICROWAVE SYSTEM BETWEEN STATIONS 250-402-329
RADIO STATION KCA-641
1-100KV KENOTRON SET
150-DH-P500=WEST TYPE AIR CIRCUIT BREAKER
130V CONTROL BATTERY (JET)
1-48V BATTERY (JET ANNUNCIATOR)
L.T. PHASING FROM RECTOX RECTIFIER
* UNITS 1,2 & 3 RETIRED IN PLACE. BREAKER TAGGED OPEN

DATE	DESCRIPTION	BY	CHCK
6/25/02	REPLACED RETIRED LINE 250-1N36H WITH NEW LINE 286-1322H	WJB	GW
12/18/01	RENAMED LINE 469-114H TO 585-114H	WJB	
8/30/01	LINE NUMBERS UPDATED AND MOBILE HOOKUP ADDED	WJB	RBB

NSTAR ELECTRIC
AN NSTAR COMPANY

STA_DIA\Sta250pldwg, 06/25/02 at 1325

200 & 250

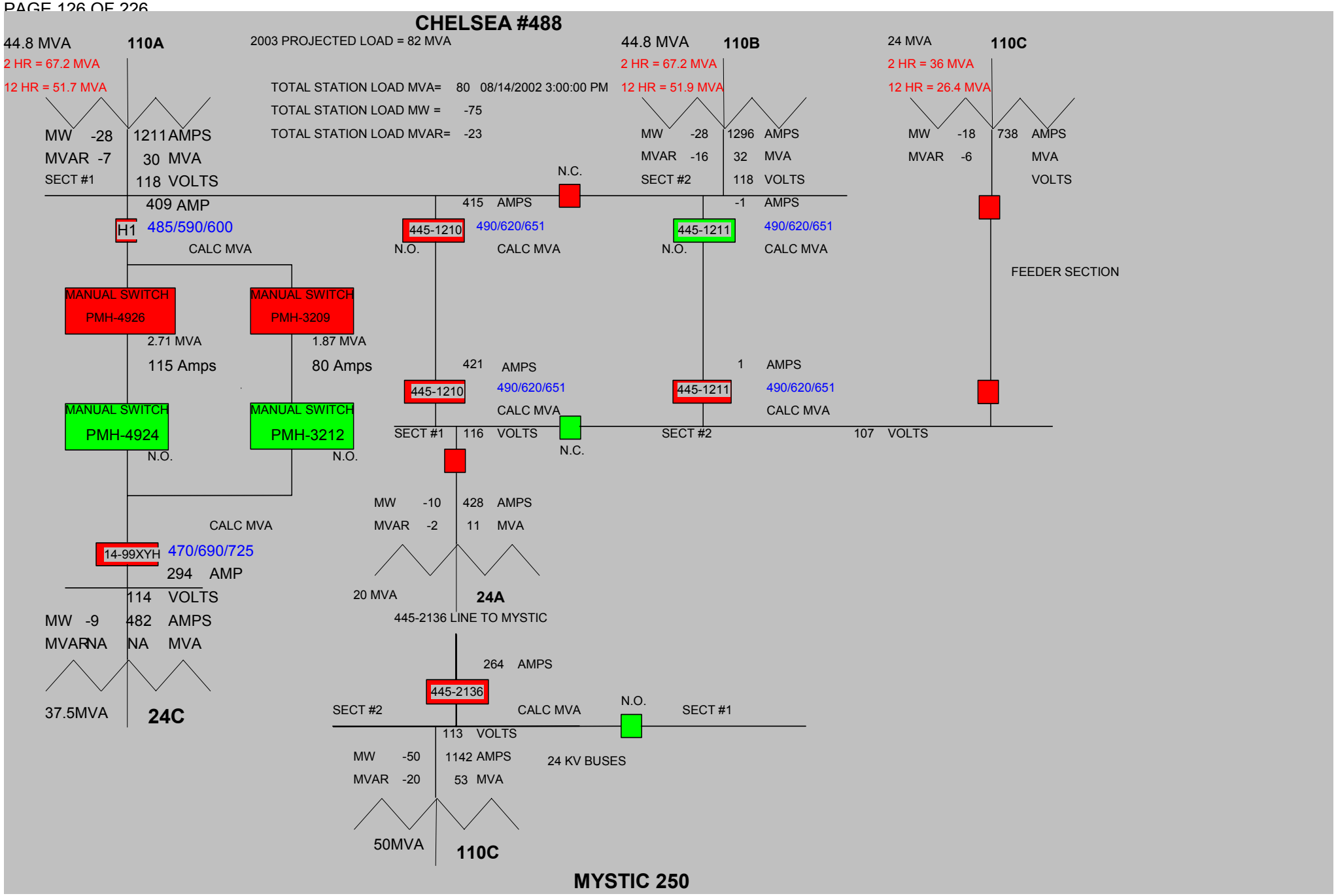
CHELSEA #488
44.8 MVA
110A
2 HR = 67.2 MVA
12 HR = 51.7 MVA
2003 PROJECTED LOAD = 82 MVA
TOTAL STATION LOAD MVA= 80 08/14/2002 3:00:00 PM
TOTAL STATION LOAD MW = -75
TOTAL STATION LOAD MVAR= -23
44.8 MVA
110B
2 HR = 67.2 MVA
12 HR = 51.9 MVA
24 MVA
110C
2 HR = 36 MVA
12 HR = 26.4 MVA
MW -28 1211 AMPS
MVAR -7 30 MVA
SECT #1 118 VOLTS
409 AMP
H1 485/590/600
CALC MVA
N.C.
415 AMPS
445-1210 490/620/651
N.O. CALC MVA
MW -28 1296 AMPS
MVAR -16 32 MVA
SECT #2 118 VOLTS
-1 AMPS
445-1211 490/620/651
N.O. CALC MVA
MW -18 738 AMPS
MVAR -6 MVA
VOLTS
FEEDER SECTION
MANUAL SWITCH PMH-4926
MANUAL SWITCH PMH-3209
2.71 MVA
1.87 MVA
115 Amps
80 Amps
421 AMPS
445-1210 490/620/651
CALC MVA
1 AMPS
445-1211 490/620/651
CALC MVA
MANUAL SWITCH PMH-4924
MANUAL SWITCH PMH-3212
N.O.
N.O.
SECT #1 116 VOLTS
N.C.
SECT #2 107 VOLTS
MW -10 428 AMPS
MVAR -2 11 MVA
CALC MVA
14-99XYH 470/690/725
294 AMP
114 VOLTS
MW -9 482 AMPS
MVAR NA NA MVA
20 MVA
24A
445-2136 LINE TO MYSTIC
264 AMPS
445-2136
SECT #2
CALC MVA
N.O.
SECT #1
113 VOLTS
MW -50 1142 AMPS
MVAR -20 53 MVA
24 KV BUSES
37.5MVA
24C
50MVA
110C
MYSTIC 250

2003 T&D OPERATING STUDY
SOMERVILLE DISTRICT

STATION #375 N. WOBURN (DRAGON COURT)

Transformer #110A: Westinghouse 50 MVA 108.9 / 13.8kV
Transformer #110B: Westinghouse 50 MVA 108.9 / 13.8kV

Overload Ratings:

Transformer	Nameplate	12 hour LTE, 90F Ambient	12 hour LTE, 110F Ambient
110A	50 MVA	68 MVA	63 MVA
110B	50 MVA	68 MVA	63 MVA

Station Capabilities:

Total Station Capacity (N)	Station Firm Capacity (LTE)	RADSEC Transfer	Manual Transfer	
100 MVA	58 MVA*	5.5 MVA	3 MVA	66.5 MVA*

* Based upon loss of either 110A/211-504 or loss of 110B/211-503.

Switching Actions:

Loss of Transformer #110A and 211-504/N140 Line:

Open: OCB 2 & 4 @ Woburn
OCB 1 & 2 @ Reading (Municipal)
OCB 40 & 40-45 @ Tewksbury (NGRID)
Circuit Switcher #CS770
Main 110A 13.8kV Circuit Breaker
Close: ABR scheme closes 13.8kV tie breakers
Manually close OCB's 2 & 4 @ Woburn
Manually close OCB's 1 & 2 @ Reading (Municipal)
Manually close OCB's 40 & 40-45 @ Tewksbury (NGRID)

Loss of Transformer #110B and 211-503/M139 line:

Open: OCB's 1 & 3 @ Woburn
OCB's 4 & 5 @ Reading (Municipal)
OCB's 39 & 39-46 @ Tewksbury (NGRID)
Circuit Switcher #CS771
Main 110B 13.8kV Circuit Breaker
Close: ABR scheme closes 13.8kV tie breakers
Manually close OCB's 1 & 3 @ Woburn
Manually close OCB's 4 & 5 @ Reading (Municipal)

Manually close OCB's 39 & 39-46 @ Tewksbury (NGRID)

For loss of either transformer, transfer of the following DSS lines via RADSEC switches may also be required:

N. Woburn 375-H1 to Woburn 211-H7 via RADSEC MRU's 052 & 021 for a transfer of 3.9 MVA
N. Woburn 375-H8 to Woburn 211-H12 via RADSEC MRU's 106 & 891 for a transfer of 0.7 MVA
N. Woburn 375-H6 to Woburn 325-1394H via RADSEC MRU's 808 & 423 for a transfer of .2 MVA
N. Woburn 375-H3 to Woburn 211-H5 via RADSEC MRU's 026 & 045 for a transfer of 0.8 MVA
N. Woburn 375-H7 to Woburn 211-H6 via RADSEC MRU 230 and manual switch on P57/21 for a transfer of 3.0 MVA

Total Transfer: 8.5 MVA

Results:

Loading		For the 375-H7 to 211-H6 load transfer, there may a heavy loading condition on the 211-H6 cable getaway for the 500 kcmil cable, but is within applicable emergency limits.
Voltage	-	For the 375-H8 to 211-H12 load transfer, the installation of switched capacitor banks and a bank of voltage regulators may be required for post-contingency voltage remediation.

Additional Actions Required:

Install a new transformer on site as a reserve capacity resource that can be placed into service following a transformer failure.

STATION 375
DRAGON COURT
NO. WOBURN
PAGE 1

TEL. # (617)369-5547

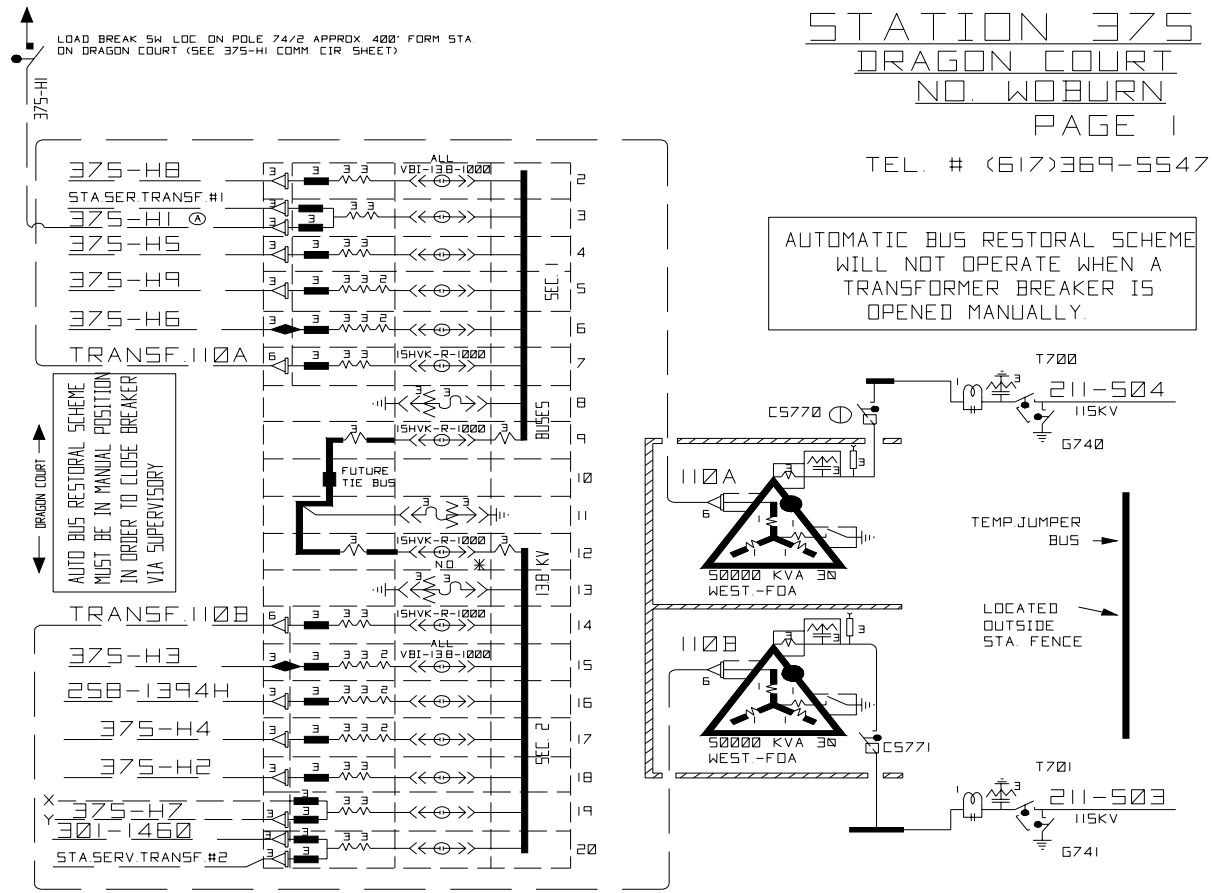

NOTES:

15HVK-R-1000 = ABB VACUUM BREAKER
AM-1000-2ML = G.E. TYPE AIR CIRC. BREAKERS.
VBI-13.8-1000 = SATURN AMERICAN VACUUM BREAKER REMANUFACTURED FROM AM-1000-2ML G.E. AIR CIRCUIT BREAKER.
* NORMALLY OPEN-CLOSES AUTO. UPON LOSS OF BUS POTENTIAL & TRANSF. LOAD-SECTION #1 OR #2.
⦶ CIRCUIT SWITCHER EQUIPPED WITH SHUNT TRIP DEVICE

SCADIA CONTROL & INDICATION.
1-130 VOLT BATTERY WITH CHARGER.
CIRCUIT SWITCHERS EQUIPPED WITH SHUNT TRIP DEVICE.
BOTH RADIO CONTROLLED LOAD RELIEF AND VOLTAGE REDUCTION AVAILABLE AT THIS STATION.

NSTAR ELECTRIC
AN NSTAR COMPANY

375

DATE	DESCRIPTION	BY	CHCK
11/1/02	CHANGED AIR BKRS IN CUB. 7,9,13 & 14 TO VACUUM BKRS.	EBA	RBB
7/30/02	CHANGED SPARE IN CUBICLE 16 TO 258-1394H.	EBA	RBB
5/12/00	REVISED FROM FIELD PRINTS	WJB	

_STA_DIA\Sta375pl.dwg, 12/11/02 at 09:00

375-H1 to 211-H7 load transfer. No problems during load transfer.

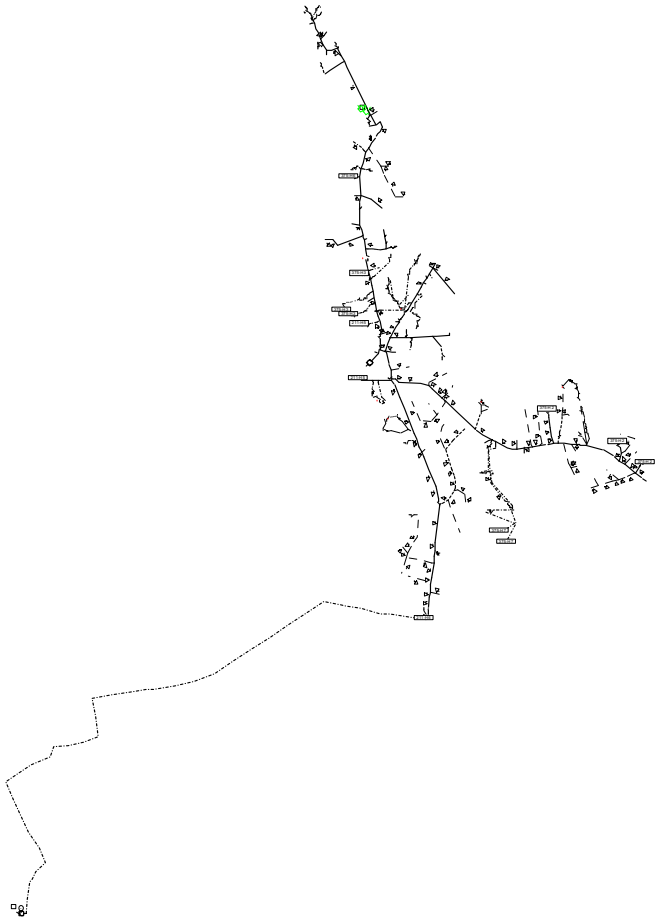

Voltage Drop Summary

Feeder	**211-H7**
Substation	STA211
Source Voltage	14.28 kVLL, 0.00 Deg.

Parameters

Analysis Type	Unbalanced Voltage Drop
Flag Levels	Summer, Emergency
Load Model	Nominal
Load Factor	1.00 x (kW) 1.00 x (kVAR)

Load Summary

	Total Load			
	kW	kVAR	kVA	PF(%)
Total load read (Non-adjusted)	8749.18	6437.94	10862.56	80.54
Total load used (Adjusted)	8747.41	6435.5	10859.68	80.55
Total shunt capacitor (Adjusted)		2660.48		
Total shunt reactor (Adjusted)		0		
Total load from motor	0	0	0	0
Total power from generator	0	0	0	0
Total power to other feeder(s) (Loop)	0	0	0	0
Total conductor capacitances		351.95		
Total losses	341.82	438.15	555.71	61.51
Total power from substation	9089.22	3861.21	9875.37	92.04

Abnormal Conditions

	Phase	Count	Worst Condition	%
	A	0	1100238-387	95.88
Overload	B	0	1100238-387	96.74
	C	0	1100238-387	95
	A	0	1100691-209	97.7
Low Voltage	B	0	1100238-319	97.52
	C	0	1100691-209	97.68
	A	0	1100238-421	103.48
High Voltage	B	0	1100238-421	103.48
	C	0	1100238-421	103.48

Voltage Drop Summary

Feeder	**375-H1**
Substation	STA375
Source Voltage	14.28 kVLL, 0.00 Deg.

Parameters

Analysis Type	Unbalanced Voltage Drop
Flag Levels	Summer, Emergency
Load Model	Nominal
Load Factor	1.00 x (kW) 1.00 x (kVAR)

Load Summary

	Total Load			
	kW	kVAR	kVA	PF(%)
Total load read (Non-adjusted)	5590.59	5308.21	7709.2	72.52
Total load used (Adjusted)	5590.16	5307.95	7708.71	72.52
Total shunt capacitor (Adjusted)		4307.54		
Total shunt reactor (Adjusted)		0		
Total load from motor	0	0	0	0
Total power from generator	0	0	0	0
Total power to other feeder(s) (Loop)	0	0	0	0
Total conductor capacitances		27.13		
Total losses	26.09	29.15	39.12	66.7
Total power from substation	5616.25	1002.43	5705.01	98.44

Abnormal Conditions

	Phase	Count	Worst Condition	%
	A	0	1100691-43	58.75
Overload	B	0	1100691-43	57.76
	C	0	1100691-43	62.81
	A	0	1100691-1	102.65
Low Voltage	B	0	1100691-1	102.71
	C	0	1100691-1	102.6
	A	0	1100691-58	103.48
High Voltage	B	0	1100691-58	103.48
	C	0	1100691-58	103.48

375-H8 to 211-H12 load transfer. The preferred switching violated voltage and load limits and therefore the following is the recommended alternative switching. The alternative provides 1.2MVA of relief by closing tie switch on pole 84/33 Pond Street and open the 375-H8 line switch on pole 94/10 Summer Street. To maintain voltage during contingency load transfer voltage regulators and one 1350 kVAR capacitor bank is required. For this study regulators were added on sections 1100233-175, 178, -182 and a capacitor bank on section 110233-86.

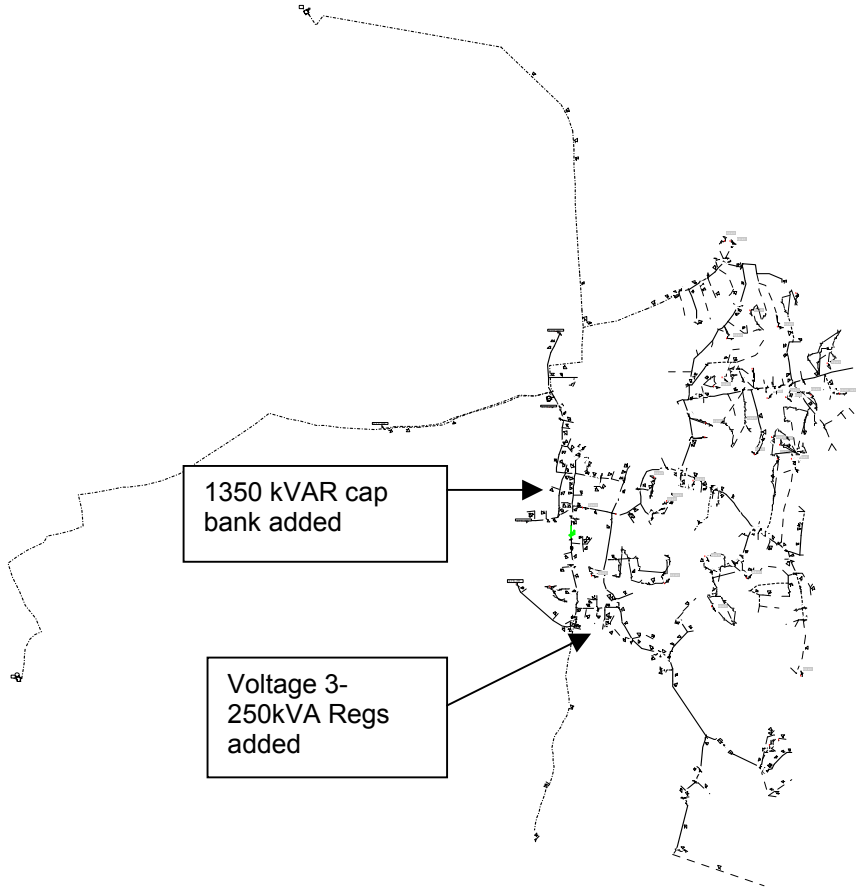

Voltage Drop Summary

Feeder	**211-H12**
Substation	STA211
Source Voltage	14.28 kVLL, 0.00 Deg.

Parameters

Analysis Type	Unbalanced Voltage Drop
Flag Levels	Summer, Emergency
Load Model	Nominal
Load Factor	1.00 x (kW) 1.00 x (kVAR)

Load Summary

	Total Load			
	kW	kVAR	kVA	PF(%)
Total load read (Non-adjusted)	8001.38	1066.79	8072.18	99.12
Total load used (Adjusted)	7972.02	1060.87	8042.3	99.13
Total shunt capacitor (Adjusted)		1326.63		
Total shunt reactor (Adjusted)		0		
Total load from motor	0	0	0	0
Total power from generator	0	0	0	0
Total power to other feeder(s) (Loop)	0	0	0	0
Total conductor capacitances		387.38		
Total losses	247.2	2378.39	2391.2	10.34
Total power from substation	8219.22	1725.24	8398.34	97.87

Abnormal Conditions

	Phase	Count	Worst Condition	%
	A	0	1100233-399	60.1
Overload	B	0	1100233-175	70.32
	C	0	1100233-399	81.52
	A	0	1100233-178	99.38
Low Voltage	B	0	1100233-175	96.82
	C	0	1100233-388	98.3
	A	0	1100233-328	103.48
High Voltage	B	0	1100233-328	103.48
	C	0	1100233-328	103.48

Voltage Drop Summary

Feeder	**375-H8**
Substation	STA375
Source Voltage	14.28 kVLL, 0.00 Deg.

Parameters

Analysis Type	Unbalanced Voltage Drop
Flag Levels	Summer, Emergency
Load Model	Nominal
Load Factor	1.00 x (kW) 1.00 x (kVAR)

Load Summary

	Total Load			
	kW	kVAR	kVA	PF(%)
Total load read (Non-adjusted)	4961.15	5114.82	7125.61	69.62
Total load used (Adjusted)	4978.91	5132.25	7150.5	69.63
Total shunt capacitor (Adjusted)		2750.62		
Total shunt reactor (Adjusted)		0		
Total load from motor	0	0	0	0
Total power from generator	0	0	0	0
Total power to other feeder(s) (Loop)	0	0	0	0
Total conductor capacitances		491.04		
Total losses	120.78	134	180.39	66.95
Total power from substation	5099.69	2024.59	5486.88	92.94

Abnormal Conditions

	Phase	Count	Worst Condition	%
	A	0	1100698-350	64.61
Overload	B	0	1100698-863	53.89
	C	0	1100698-350	72.34
	A	0	1100698-785	97.97
Low Voltage	B	0	1100698-287	101.95
	C	0	1100698-185	99.95
	A	0	1100698-830	103.48
High Voltage	B	0	1100698-830	103.48
	C	0	1100698-830	103.48

375-H6 to 325-1394H1 load transfer. No problems during load transfer.

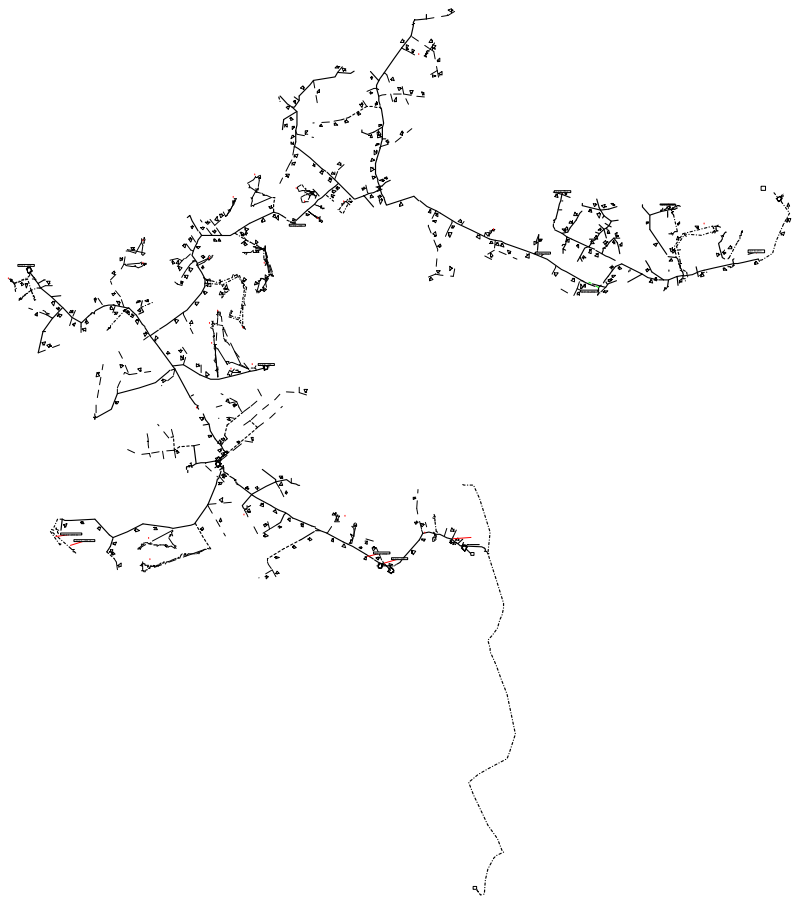

Voltage Drop Summary

Feeder	**325-1394H & H1**
Substation	STA211
Source Voltage	14.28 kVLL, 0.00 Deg.

Parameters

Analysis Type	Unbalanced Voltage Drop
Flag Levels	Summer, Emergency
Load Model	Nominal
Load Factor	1.00 x (kW) 1.00 x (kVAR)

Load Summary

	Total Load			
	kW	kVAR	kVA	PF(%)
Total load read (Non-adjusted)	7235.71	4749.2	8655.08	83.6
Total load used (Adjusted)	7235.2	4748.51	8654.28	83.6
Total shunt capacitor (Adjusted)		2748.72		
Total shunt reactor (Adjusted)		0		
Total load from motor	0	0	0	0
Total power from generator	0	0	0	0
Total power to other feeder(s) (Loop)	0	0	0	0
Total conductor capacitances		230.08		
Total losses	118.43	236.14	264.17	44.83
Total power from substation	7353.63	2005.85	7622.29	96.48

Abnormal Conditions

	Phase	Count	Worst Condition	%
	A	0	1100536-9	73.91
Overload	B	0	1100536-9	73.47
	C	0	1100536-9	73.7
	A	0	1100696-1150	99.54
Low Voltage	B	0	1100696-1150	99.16
	C	0	1100696-1150	99.6
	A	0	1100536-44	103.48
High Voltage	B	0	1100536-44	103.48
	C	0	1100536-44	103.48

Voltage Drop Summary

Feeder	**375-H6**
Substation	STA375
Source Voltage	14.28 kVLL, 0.00 Deg.

Parameters

Analysis Type	Unbalanced Voltage Drop
Flag Levels	Summer, Emergency
Load Model	Nominal
Load Factor	1.00 x (kW) 1.00 x (kVAR)

Load Summary

	Total Load			
	kW	kVAR	kVA	PF(%)
Total load read (Non-adjusted)	8747.51	10020.91	13301.79	65.76
Total load used (Adjusted)	8747.53	10020.95	13301.84	65.76
Total shunt capacitor (Adjusted)		5411.6		
Total shunt reactor (Adjusted)		0		
Total load from motor	0	0	0	0
Total power from generator	0	0	0	0
Total power to other feeder(s) (Loop)	0	0	0	0
Total conductor capacitances		277.81		
Total losses	237.92	558.95	607.48	39.17
Total power from substation	8985.46	4890.49	10230.12	87.83

Abnormal Conditions

	Phase	Count	Worst Condition	%
	A	0	1100696-294	75.47
Overload	B	0	1100696-294	79.18
	C	0	1100696-294	72.73
	A	0	1100696-990	96.58
Low Voltage	B	0	1100696-918	95.91
	C	0	1100696-830	98.07
	A	0	1100696-164	103.48
High Voltage	B	0	1100696-164	103.48
	C	0	1100696-164	103.48

375-H3 to 211-H5 load transfer. No problems during load transfer.

Voltage Drop Summary

Feeder	**211-H5**
Substation	STA211
Source Voltage	14.28 kVLL, 0.00 Deg.

Parameters

Analysis Type	Unbalanced Voltage Drop
Flag Levels	Summer, Emergency
Load Model	Nominal
Load Factor	1.00 x (kW) 1.00 x (kVAR)

Load Summary

	Total Load			
	kW	kVAR	kVA	PF(%)
Total load read (Non-adjusted)	5165.23	3666.79	6334.43	81.54
Total load used (Adjusted)	5165.2	3666.76	6334.39	81.54
Total shunt capacitor (Adjusted)		2811.77		
Total shunt reactor (Adjusted)		0		
Total load from motor	0	0	0	0
Total power from generator	0	0	0	0
Total power to other feeder(s) (Loop)	0	0	0	0
Total conductor capacitances		238.95		
Total losses	81.93	102.1	130.91	62.59
Total power from substation	5247.14	718.14	5296.05	99.08

Abnormal Conditions

	Phase	Count	Worst Condition	%
	A	0	1100236-442	46.89
Overload	B	0	1100236-442	53.45
	C	0	1100236-442	53.36
	A	0	1100236-524	100.25
Low Voltage	B	0	1100236-460	96.01
	C	0	1100236-341	95.76
	A	0	1100236-603	103.48
High Voltage	B	0	1100236-603	103.48
	C	0	1100236-603	103.48

Voltage Drop Summary

Feeder	**375-H3**
Substation	STA375
Source Voltage	14.28 kVLL, 0.00 Deg.

Parameters

Analysis Type	Unbalanced Voltage Drop
Flag Levels	Summer, Emergency
Load Model	Nominal
Load Factor	1.00 x (kW) 1.00 x (kVAR)

Load Summary

	Total Load			
	kW	kVAR	kVA	PF(%)
Total load read (Non-adjusted)	5048.41	6032.04	7865.87	64.18
Total load used (Adjusted)	5048.36	6031.96	7865.78	64.18
Total shunt capacitor (Adjusted)		2814.18		
Total shunt reactor (Adjusted)		0		
Total load from motor	0	0	0	0
Total power from generator	0	0	0	0
Total power to other feeder(s) (Loop)	0	0	0	0
Total conductor capacitances		57.78		
Total losses	44.54	86.89	97.64	45.62
Total power from substation	5092.9	3246.89	6039.86	84.32

Abnormal Conditions

	Phase	Count	Worst Condition	%
	A	0	1100693-9	47.74
Overload	B	0	1100693-9	44.51
	C	0	1100693-9	45.15
	A	0	1100693-130	101.51
Low Voltage	B	0	1100693-182	102.13
	C	0	1100693-245	102.06
	A	0	1100693-4	103.48
High Voltage	B	0	1100693-4	103.48
	C	0	1100693-4	103.48

375-H7 to 211-H6 load transfer. Feeder section of 211-H6 overloaded during contingency switch but within allowable operating limits..

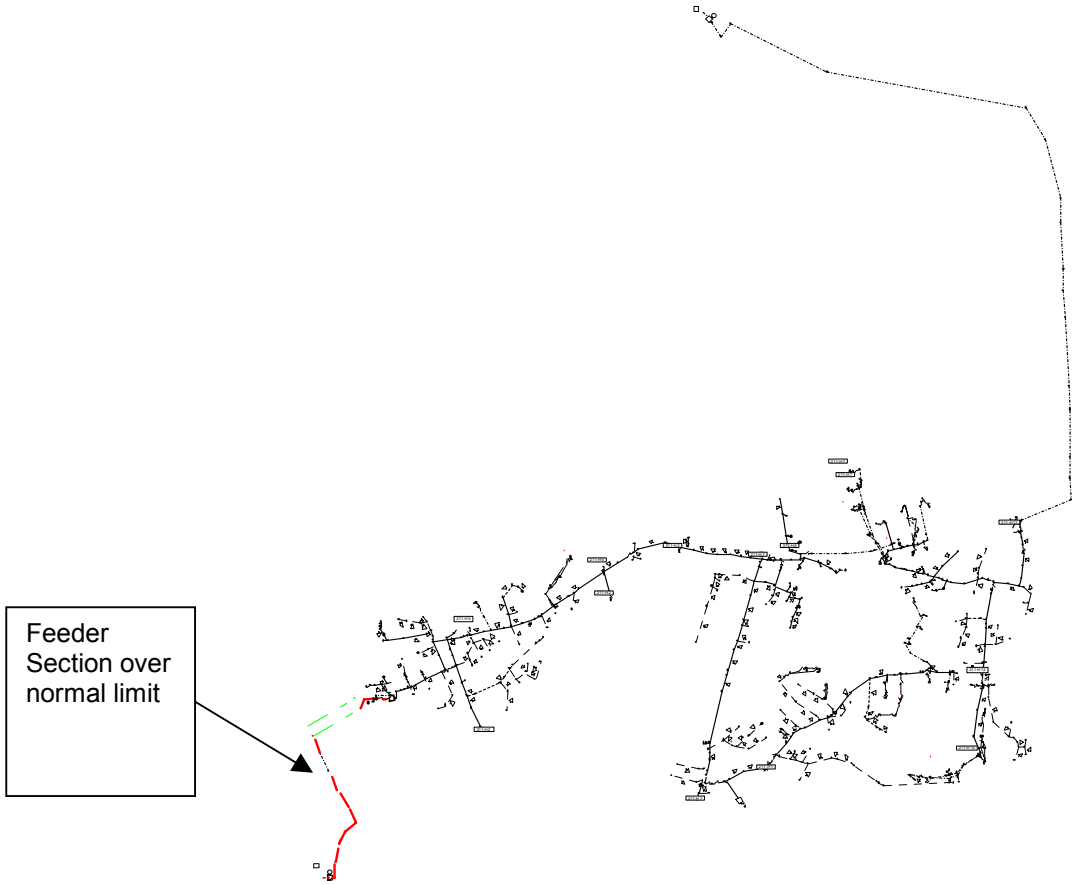

Voltage Drop Summary

Feeder	**211-H6**
Substation	STA211
Source Voltage	14.28 kVLL, 0.00 Deg.

Parameters

Analysis Type	Unbalanced Voltage Drop
Flag Levels	Summer, Emergency
Load Model	Nominal
Load Factor	1.00 x (kW) 1.00 x (kVAR)

Load Summary

	Total Load			
	kW	kVAR	kVA	PF(%)
Total load read (Non-adjusted)	9687.56	7008.48	11956.91	81.02
Total load used (Adjusted)	9687.6	7008.54	11956.98	81.02
Total shunt capacitor (Adjusted)		5413.43		
Total shunt reactor (Adjusted)		0		
Total load from motor	0	0	0	0
Total power from generator	0	0	0	0
Total power to other feeder(s) (Loop)	0	0	0	0
Total conductor capacitances		161.62		
Total losses	289.67	411.6	503.31	57.55
Total power from substation	9977.28	1845.09	10146.45	98.33

Abnormal Conditions

	Phase	Count	Worst Condition	%
	A	0	1100237-258	91.54
Overload	B	15	1100237-258	104.54
	C	0	1100237-258	98.16
	A	0	1100237-279	102.78
Low Voltage	B	0	1100697-221	96.71
	C	0	1100697-221	97.13
	A	0	1100697-359	103.75
High Voltage	B	0	1100237-326	103.48
	C	0	1100237-326	103.48

Voltage Drop Summary

Feeder	**375-H7**
Substation	STA375
Source Voltage	14.28 kVLL, 0.00 Deg.

Parameters

Analysis Type	Unbalanced Voltage Drop
Flag Levels	Summer, Emergency
Load Model	Nominal
Load Factor	1.00 x (kW) 1.00 x (kVAR)

Load Summary

	Total Load			
	kW	kVAR	kVA	PF(%)
Total load read (Non-adjusted)	3533.78	7508.08	8298.12	42.59
Total load used (Adjusted)	3533.54	7508.01	8297.96	42.58
Total shunt capacitor (Adjusted)		4134.1		
Total shunt reactor (Adjusted)		0		
Total load from motor	0	0	0	0
Total power from generator	0	0	0	0
Total power to other feeder(s) (Loop)	0	0	0	0
Total conductor capacitances		346.7		
Total losses	87.57	123.06	151.04	57.98
Total power from substation	3621.11	3150.27	4799.65	75.45

Abnormal Conditions

	Phase	Count	Worst Condition	%
	A	0	1100697-70	59.79
Overload	B	0	1100697-103	35.52
	C	0	1100697-70	48.36
	A	0	1100697-68	97.74
Low Voltage	B	0	1100697-7	102.97
	C	0	1100697-18	100.94
	A	0	1100697-1	103.48
High Voltage	B	0	1100697-77	104.04
	C	0	1100697-7	103.67

Feeder Id	Section Id	Equipment Id	Phase	VA	VB	VC	VA (kVLN)	VB (kVLN)	VC (kVLN)	IA (Amps)	IB (Amps)	IC (Amps)	Loading A (%)	Loading B (%)	Loading C (%)	Thru Power A (kW)	Thru Power B (kW)	Thru Power C (kW)	Thru Power A (kVAR)	Thru Power B (kVAR)	Thru Power C (kVAR)
211-H6	0	500/3	ABC	124.2	124.1	124	8.2	8.2	8.2	384.2	438.3	411.7	91.5	104.4	98	3158	3491	3325	245.3	928.3	671.9
211-H6	1100237-325	500/3	ABC	124.2	124.1	124	8.2	8.2	8.2	384.3	438.3	411.7	91.5	104.4	98	3158	3490	3324	245.2	928.7	671.7
211-H6	1100237-323	500/3	ABC	124.1	124	124	8.2	8.2	8.2	384.3	438.3	411.7	91.5	104.4	98	3158	3490	3324	245.2	928.7	671.7
211-H6	1100237-322	500/3	ABC	124.1	124	123.8	8.2	8.2	8.2	384.3	438.4	411.7	91.5	104.4	98	3158	3488	3321	244.9	929.9	671.2
211-H6	1100237-321	500/3	ABC	124.1	123.9	123.8	8.2	8.2	8.2	384.3	438.4	411.8	91.5	104.4	98	3157	3486	3318	244.5	931.5	670.6
211-H6	1100237-320	500/3	ABC	124.1	123.9	123.7	8.2	8.2	8.2	384.3	438.4	411.8	91.5	104.4	98	3157	3486	3318	244.5	931.7	670.5
211-H6	1100237-319	500/3	ABC	124.1	123.9	123.6	8.2	8.2	8.2	384.3	438.5	411.8	91.5	104.4	98.1	3157	3485	3316	244.3	932.5	670.2
211-H6	1100237-317	500/3	ABC	124.1	123.8	123.5	8.2	8.2	8.2	384.3	438.5	411.9	91.5	104.4	98.1	3157	3483	3314	244	933.7	669.6
211-H6	1100237-312	500/3	ABC	124	123.7	123.4	8.2	8.2	8.2	384.3	438.6	411.9	91.5	104.4	98.1	3156	3481	3311	243.7	935	669.1
211-H6	1100237-301	500/3	ABC	124	123.6	123.3	8.2	8.2	8.2	384.3	438.6	411.9	91.5	104.4	98.1	3156	3479	3308	243.3	936.7	668.3
211-H6	1100237-283	500/3	ABC	124	123.5	123	8.2	8.2	8.2	384.4	438.8	412	91.5	104.5	98.1	3155	3474	3302	242.6	939.9	666.9
211-H6	1100237-270	500/3	ABC	123.9	123.2	122.6	8.2	8.2	8.1	384.4	438.8	412.1	91.5	104.5	98.1	3155	3472	3299	242.2	941.4	666.2
211-H6	1100237-259	500/3	ABC	123.9	123.2	122.6	8.2	8.2	8.1	384.5	439	412.2	91.5	104.5	98.1	3154	3465	3290	241.2	945.7	664.2
211-H6	1100237-256	500/3	ABC	123.9	123.1	122.5	8.2	8.2	8.1	384.5	439	412.2	91.5	104.5	98.2	3154	3464	3288	241	946.5	663.9
211-H6	1100237-258	500/3	ABC	123.9	123.1	122.4	8.2	8.2	8.1	384.5	439.1	412.3	91.5	104.5	98.2	3153	3463	3286	240.8	947.6	663.4

2003 T&D OPERATING STUDY
SOMERVILLE DISTRICT

STATION #402 SOMERVILLE

Transformer #110A: Westinghouse 50/56 MVA 115 / 13.8kV
Transformer #110B: Westinghouse 50/56 MVA 115 / 13.8kV

Overload Ratings:

Transformer	Nameplate	12 hour LTE, 90F Ambient	12 hour LTE, 110F Ambient
110A	50/56 MVA	69 MVA	65 MVA
110B	50/56 MVA	69 MVA	64 MVA

Station Capabilities:

Total Station Capacity (N)	Station Firm Capacity (LTE)	RADSEC Transfer	Manual Transfer	Total LCC
112 MVA	91 MVA (A)	0 MVA	0 MVA	91 MVA

(A) Includes 19 MW of Kendall generation.

Switching Actions:

Loss of Transformer #110A and 329-511 Line:

Open: OCB's 5 & 6 @ Mystic
OCB's 7 & 8 @ Brighton
Circuit Switcher #CS770
Main 110A 13.8kV Secondary Circuit Breaker
Close: 13.8kV Tie Breakers Operated Normally Closed
Manually close OCB's 5 & 6 @ Mystic
Manually close OCB's 7 & 8 @ Brighton

Loss of Transformer #110B and 329-510 Line:

Open: OCB's 12 & 13 @ Mystic
OCB's 4 & 5 @ Brighton
Circuit Switcher #CS771
Main 110B 13.8kV Secondary Circuit Breaker
Close: 13.8kV Tie Breakers Operated Normally Closed
Manually close OCB's 12 & 13 @ Mystic
Manually close OCB's 4 & 5 @ Brighton

No 13.8kV Distribution Circuit Transfers at this station.

Results:

Loading	-	No heavy loading conditions were identified.
Voltage	-	No Voltage Conditions were identified.

Additional Actions Required:

None

"T"

NOTIFY C.E.L. BEFORE ANY SWITCHING.
TRANSF. & TIE BKRS. NOT INTERCHANGEABLE

14KV C.E.L. TIES 80MW TOTAL
NORMAL LOAD 70MW

STATION 402
51 PROSPECT STREET
SOMERVILLE

PAGE 1

WAREHAM TEL.# 1-800-634-2601
TEL.# 617-541-7103

(SEE STA. SER. DIA.)
NO.1

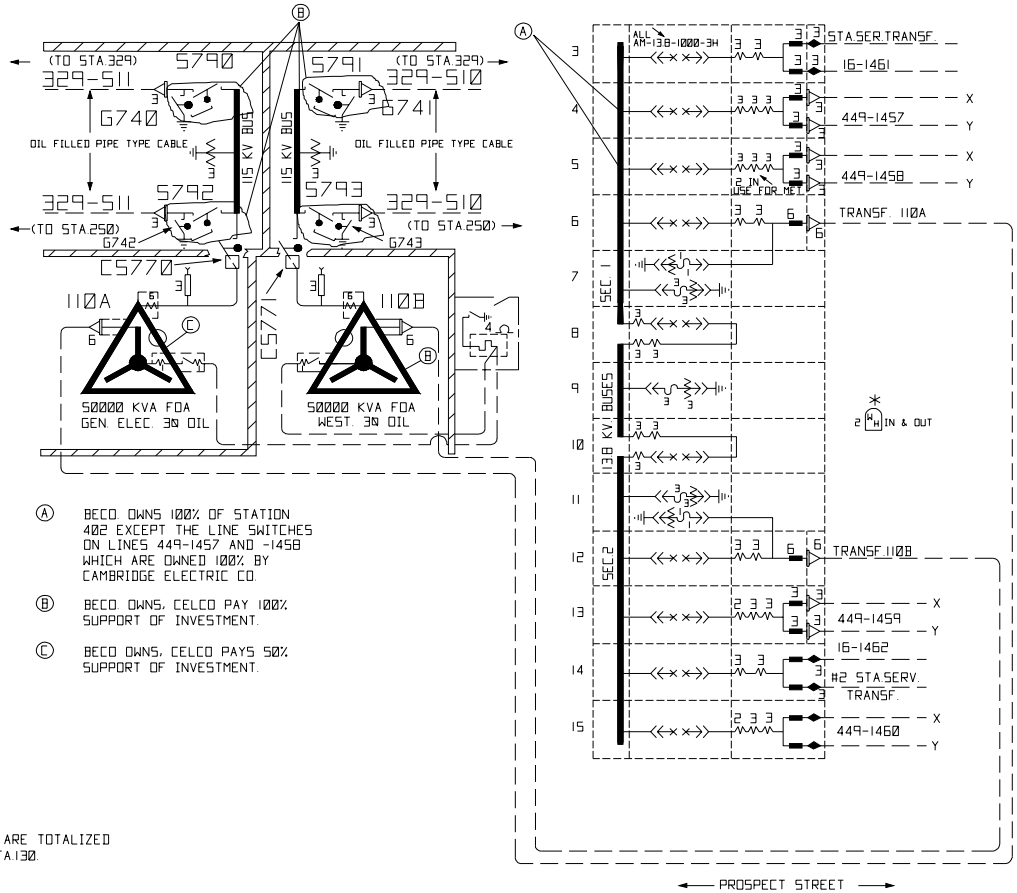

Ⓐ BECO. OWNS 100% OF STATION 402 EXCEPT THE LINE SWITCHES ON LINES 449-1457 AND -1458 WHICH ARE OWNED 100% BY CAMBRIDGE ELECTRIC CO.

Ⓑ BECO. OWNS, CELCO PAY 100% SUPPORT OF INVESTMENT.

Ⓒ BECO OWNS, CELCO PAYS 50% SUPPORT OF INVESTMENT.

NOTES

AM-138-1000-3H=GEN. ELEC. TYPE AIR CIRCUIT BREAKERS.

1-130 VOLT CONTROL WITH BATTERY CHARGER.

1-48 VOLT SCADA CONTROL AND MICROWAVE BATTERY WITH CHARGER.

* LOAD OF THE CAMBRIDGE ELECTRIC LIGHT CO. LINES FROM THIS STA. ARE TOTALIZED WITH THE CAMBRIDGE ELECTRIC LIGHT CO. LINES FROM STA.329 AT STA.130. SCADA CONTROL AND INDICATION.

SUPPORT INVESTMENT IS MORE THAN RENT. IT INCLUDES O & M, DEPRECIATION, EXPENSES, ETC.

_STA_DIA\Sta402rl.dwg, 08/27/02 at 1357

NSTAR ELECTRIC
AN NSTAR COMPANY

402

DATE	DESCRIPTION	BY	CHCK
7/2/01	APPROVED FOR USE	EBA	AAA

2003 T&D OPERATING STUDY
SOMERVILLE DISTRICT

STATION #488 CHELSEA

Transformer #110A: General Electric 30/40 [44.8] MVA 110 / 13.8kV
Transformer #110B: General Electric 30/40 [44.8] MVA 110 / 13.8kV
Transformer #110C: Westinghouse 18/24 MVA 110 / 13.8kV*

*No nameplate data available, info. taken from station 1-line diagram

Overload Ratings:

Transformer	Nameplate	12 hour LTE, 90F Ambient	12 hour LTE, 110F Ambient
110A	30/40 [44.8] MVA	57 MVA	65 MVA
110B	30/40 [44.8] MVA	57 MVA	64 MVA
110C	18/24 MVA	29 MVA	64 MVA

Station Capabilities:

Total Station Capacity (N)	Station Firm Capacity (LTE)		Manual Transfer	Total LCC
104 MVA	72 MVA	0 MVA	4.2 MVA	76.2 MVA

Switching Actions:

Loss of Transformer #110A and 128-518/P168 Line:

Open: OCB 68-79 @ Revere (NGRID)
OCB #1
Circuit Switcher #CS771
Main 110A 13.8kV Secondary Circuit Breaker
Close: 13.8kV Tie Breakers Operated Normally Closed
Manually close OCB 68-79 @ Revere (NGRID)
Manually close OCB #1 to restore 115 kv tie line.

Loss of Transformer #110B and 488-518 Line:

Open: GCB's 23 & 24 @ Mystic
OCB #2
Circuit Switcher #CS770

Main 110B 13.8kV Secondary Circuit Breaker

Close: 13.8kV Tie Breakers Operated Normally Closed
Manually close GCB's 23 & 24 @ Mystic
Manually close OCB #2 to restore 115 kv tie line.

Loss of Transformer #110C:

Open: OCB's 1 & 2
Circuit Switcher #CS772
Main 110C 13.8kV Circuit Breaker

Close: Nothing at Station 488 – Transformer Feeds Station 455 (Crescent Avenue)
Manually close OCB's 1 & 2

The tie lines 445-1210 and 445-1211 will close upon the loss of a transformer at either Station #488 or #445.

For loss of either transformer, transfer of the following DSS lines via manual switches may also be required:

Chelsea 488-H1 to 14-99XYH Mystic via manual switches PMH3212 and PMH3209 for a peak transfer of 0.5 MVA.
Chelsea 488-H1 to 108-195H Mystic via manual switches PMH4924 and PMH4926 for a peak transfer of 3.7 MVA.

Total Transfer: 4.2 MVA

Results:

Loading - No heavy loading conditions were identified.

Voltage - No Voltage Conditions were identified.

Additional Actions Required:

Install and place into service a mobile 115/14kV transformer within 24 hours of a failure of one of the Chelsea Station #488 transformers.

STATION 488
WILLOUGHBY ST.
CHELSEA

TEL.# (617)424-2868

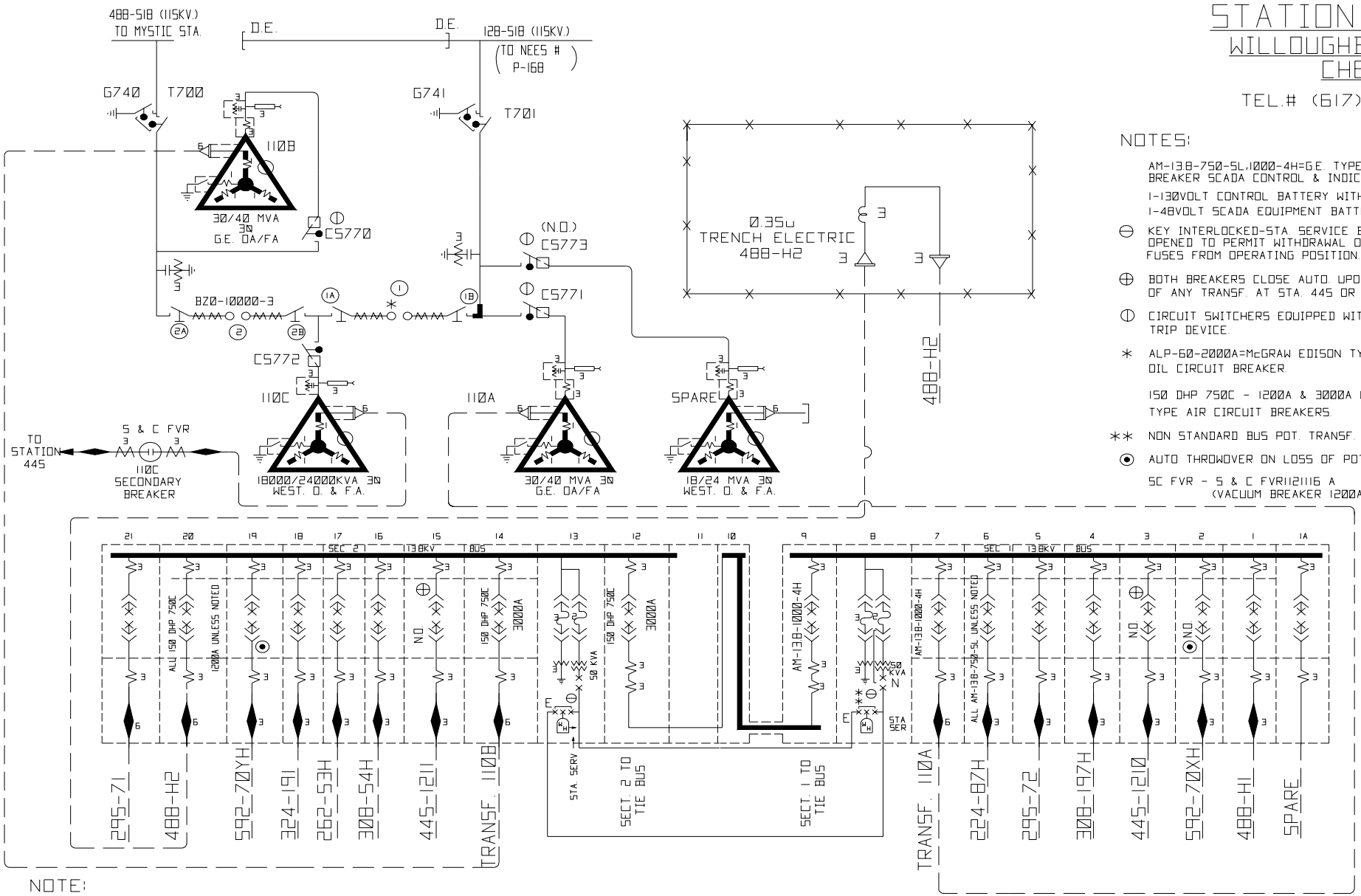

NOTES:

AM-138-750-SL,1000-4H=G.E. TYPE AIR CIRCUIT BREAKER SCADA CONTROL & INDICATION

1-130VOLT CONTROL BATTERY WITH CHARGER.

1-48VOLT SCADA EQUIPMENT BATTERY WITH CHARGER

⊖ KEY INTERLOCKED-STA. SERVICE BREAKER MUST BE OPENED TO PERMIT WITHDRAWAL OF PRIMARY FUSES FROM OPERATING POSITION.

⊕ BOTH BREAKERS CLOSE AUTO. UPON LOSS OF ANY TRANSF. AT STA. 445 OR 488.

⊖ CIRCUIT SWITCHERS EQUIPPED WITH SHUNT TRIP DEVICE.

* ALP-60-2000A=McGRAW EDISON TYPE OIL CIRCUIT BREAKER.

150 DHP 750C - 1200A & 3000A WEST. TYPE AIR CIRCUIT BREAKERS.

** NON STANDARD BUS POT. TRANSF. 121:21:1

⊙ AUTO THROWOVER ON LOSS OF POTENTIAL.

SC FVR - S & C FVR112116 A (VACUUM BREAKER 1200A, 15KV)

NOTE:

IF A TRANSFORMER IS OUT OF SERVICE AT STA. 445 OR 488 AND THE TIES ARE CLOSED, OPEN NEUTRAL OF ONE TRANSFORMER.

DATE	DESCRIPTION	BY	CHCK
5/21/02	UPDATED FROM ENGINEER'S MARK-UPS.	EBA	PSL
5/17/02	UPDATED FROM ENGINEER'S MARK-UPS	EBA	RBB
3/22/02	UPDATED PER ENGINEER'S NOTES	EBA	
7/9/01	UPDATED PER ENGINEER'S NOTES	EBA	

NSTAR ELECTRIC
AN NSTAR COMPANY

488

_STA_DIA\Sta488.dwg, 12/09/02 at 07:12

488-H1 to 14-99XYH and 108-195H load transfer. No problems during load transfer.

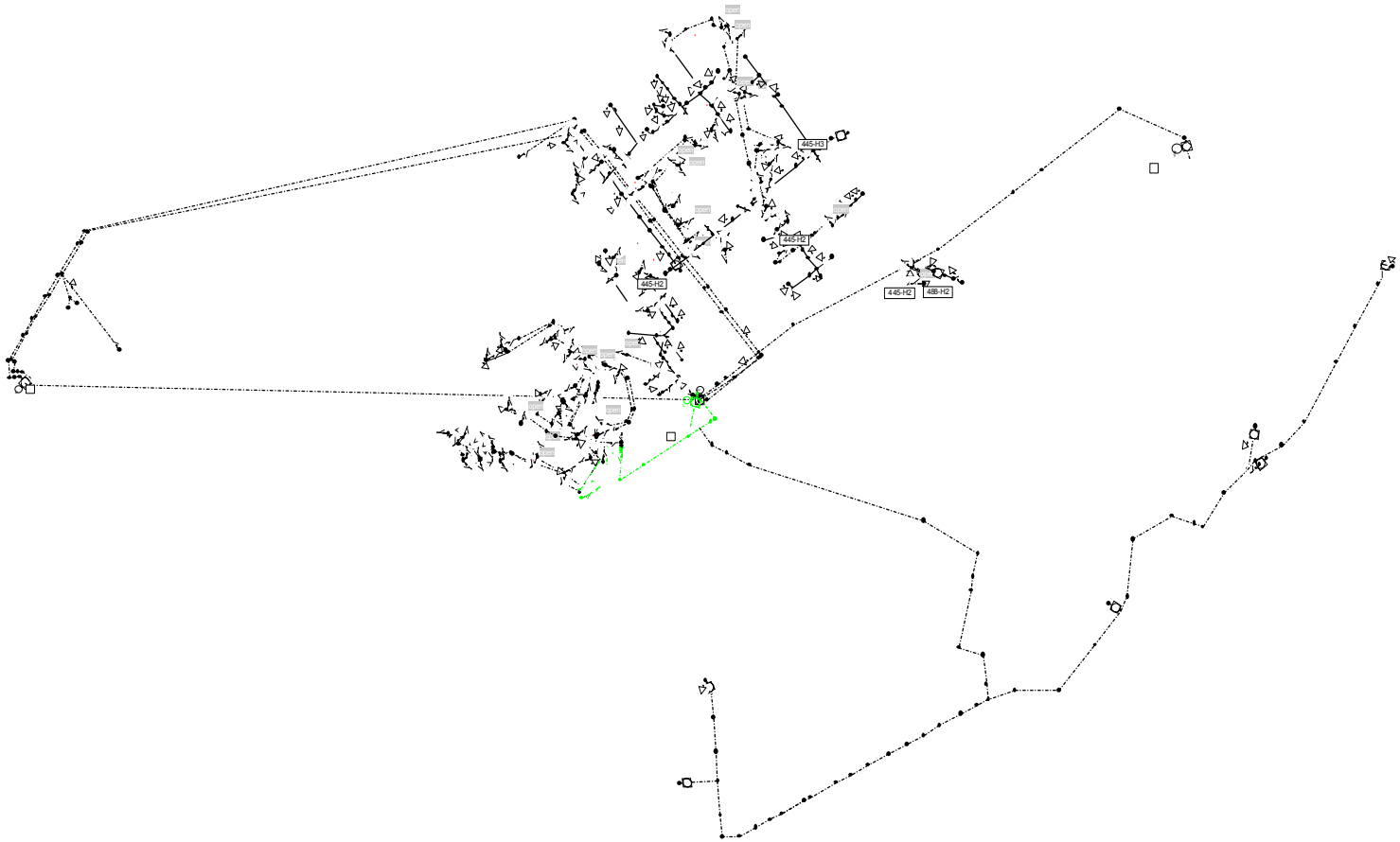

Voltage Drop Summary

Feeder	**14-99XYH**
Substation	STA250
Source Voltage	14.28 kVLL, 0.00 Deg.

Parameters

Analysis Type	Unbalanced Voltage Drop
Flag Levels	Summer, Emergency
Load Model	Nominal
Load Factor	1.00 x (kW) 1.00 x (kVAR)

Load Summary

	Total Load			
	kW	kVAR	kVA	PF(%)
Total load read (Non-adjusted)	8178.54	239.2	8182.04	99.96
Total load used (Adjusted)	8177.03	239.22	8180.53	99.96
Total shunt capacitor (Adjusted)		0		
Total shunt reactor (Adjusted)		0		
Total load from motor	0	0	0	0
Total power from generator	0	0	0	0
Total power to other feeder(s) (Loop)	0	0	0	0
Total conductor capacitances		416.7		
Total losses	47.5	79.95	92.99	51.08
Total power from substation	8224.53	-97.53	8225.1	-99.99

Abnormal Conditions

	Phase	Count	Worst Condition	%
	A	0	1100102-46	70.36
Overload	B	0	1100102-46	70.36
	C	0	1100102-46	70.36
	A	0	1100102-37	102.47
Low Voltage	B	0	1100102-37	102.47
	C	0	1100102-37	102.47
	A	0	1100102-51	103.48
High Voltage	B	0	1100102-51	103.48
	C	0	1100102-51	103.48

Voltage Drop Summary

Feeder	**108-195H**
Substation	DEFAULT
Source Voltage	14.28 kVLL, 0.00 Deg.

Parameters

Analysis Type	Unbalanced Voltage Drop
Flag Levels	Summer, Emergency
Load Model	Nominal
Load Factor	1.00 x (kW) 1.00 x (kVAR)

Load Summary

	Total Load			
	kW	kVAR	kVA	PF(%)
Total load read (Non-adjusted)	9436.86	1556.17	9564.31	98.67
Total load used (Adjusted)	9435.31	1556.14	9562.77	98.67
Total shunt capacitor (Adjusted)		0		
Total shunt reactor (Adjusted)		0		
Total load from motor	0	0	0	0
Total power from generator	0	0	0	0
Total power to other feeder(s) (Loop)	0	0	0	0
Total conductor capacitances		437.85		
Total losses	82.88	69.44	108.13	76.65
Total power from substation	9518.19	1187.73	9592.01	99.23

Abnormal Conditions

	Phase	Count	Worst Condition	%
	A	0	1100013-9	93.81
Overload	B	0	1100013-9	90.64
	C	0	1100013-9	92.61
	A	0	1100013-1696586	102.06
Low Voltage	B	0	1100013-1696586	102.11
	C	0	1100013-1696586	102.09
	A	0	1100013-11	103.48
High Voltage	B	0	1100013-11	103.48
	C	0	1100013-11	103.48

Voltage Drop Summary

Feeder	**488-H1**
Substation	STA488
Source Voltage	14.28 kVLL, 0.00 Deg.

Parameters

Analysis Type	Unbalanced Voltage Drop
Flag Levels	Summer, Emergency
Load Model	Nominal
Load Factor	1.00 x (kW) 1.00 x (kVAR)

Load Summary

	Total Load			
	kW	kVAR	kVA	PF(%)
Total load read (Non-adjusted)	4907.15	2136.35	5352.02	91.69
Total load used (Adjusted)	4906.46	2136.07	5351.28	91.69
Total shunt capacitor (Adjusted)		0		
Total shunt reactor (Adjusted)		0		
Total load from motor	0	0	0	0
Total power from generator	0	0	0	0
Total power to other feeder(s) (Loop)	0	0	0	0
Total conductor capacitances		257.37		
Total losses	24.04	46.26	52.13	46.11
Total power from substation	4930.5	1924.96	5292.95	93.15

Abnormal Conditions

	Phase	Count	Worst Condition	%
	A	0	1100924-238	34.4
Overload	B	0	1100924-238	35.49
	C	0	1100924-65	53.87
	A	0	1100924-61	102.18
Low Voltage	B	0	1100924-316	102.23
	C	0	1100924-56	100.53
	A	0	1100924-126	103.48
High Voltage	B	0	1100924-126	103.48
	C	0	1100924-126	103.48

Waltham District

Bulk Substation Transformer Outages

Distribution Supply Line Outages

Thermal Results and Remedial Switching Actions

2003 T&D OPERATING STUDY
WALTHAM DISTRICT

STATION #148 NEEDHAM

Transformer #110A: Pennsylvania 30/40/50 [56] MVA 110/13.8/13.8 kV
Transformer #110C: ABB, 37/50/62.5 MVA 117/14.4 kV

Overload Ratings:

Transformer	Nameplate	12 hour LTE, 90F Ambient	12 hour LTE, 110F Ambient
110A	30/40/50 [56] MVA	73 MVA	68 MVA
110C	37/50/62.5 MVA	81 MVA	74 MVA

Station Capabilities:

Total Station Capacity (N)	Station Firm Capacity (LTE)	RADSEC Transfer	Manual Transfer	Total LCC
112.5 MVA	50 MVA	26.3 MVA	0 MVA	76.3 MVA

Switching Actions:

Loss of Transformer #110A:

Open: Circuit Breakers #1 and #2 in Hyde Park 115kV Ring Bus
Both Main 110A 13.8kV Circuit Breakers
Disconnect Switch #T730
Close: ABR scheme closes 13.8V bus-tie breaker automatically
Circuit Breakers #1 and #2 to restore Hyde Park 115kV Ring Bus

Loss of Transformer #110C:

Open: Circuit Breakers #3 and #6 in Hyde Park 115kV Ring Bus
Main 110C 13.8kV Circuit Breaker
Circuit Switcher #CS771
Close: ABR scheme closes 13.8V bus tie-breaker automatically
Circuit Breakers #3 and #6 to restore Hyde Park 115kV Ring Bus

[For loss of either transformer, transfer of the following DSS lines via RADSEC switches may also be required]:

Needham 148-H3 to Baker Street 110 20-2407, 20-2405, 20-2406 via Station 20 as follows:

Open RADSEC MRU 878 and close RADSEC MRU 931 for a transfer of 5.0 MVA

Open RADSEC MRU 610 and close RASDEC MRU 187 for a transfer of 1.5 MVA
Close RASEC MRU 883 for a transfer of 4.4 MVA

Needham 148-H1 to Newton Highlands 292-H4 via RADSEC MRU 817 for a transfer of 3.4 MVA
Needham 148-H4 to Newton Highlands 292-H9 via RADSEC MRU 812 for a transfer of 3.2 MVA
Needham 148-H4 to Newton Highlands 292-H9 via RADSEC MRU 819 for a transfer of 4.3 MVA
Needham 148-H6 to Newton Highlands 292-H10 via RADSEC MRU 827 for a transfer of 4.5 MVA

Results:

Loading - No heavy loading conditions were identified.

Voltage - No low voltage conditions were identified.

Additional Actions Required:

Upgrade Transformer 110A secondary breaker, increases the firm capacity to 63 MVA and LCC to 89.3.

STATION 148

461 CHESNUT ST.
NEEDHAM

TEL. # (617)541-7051

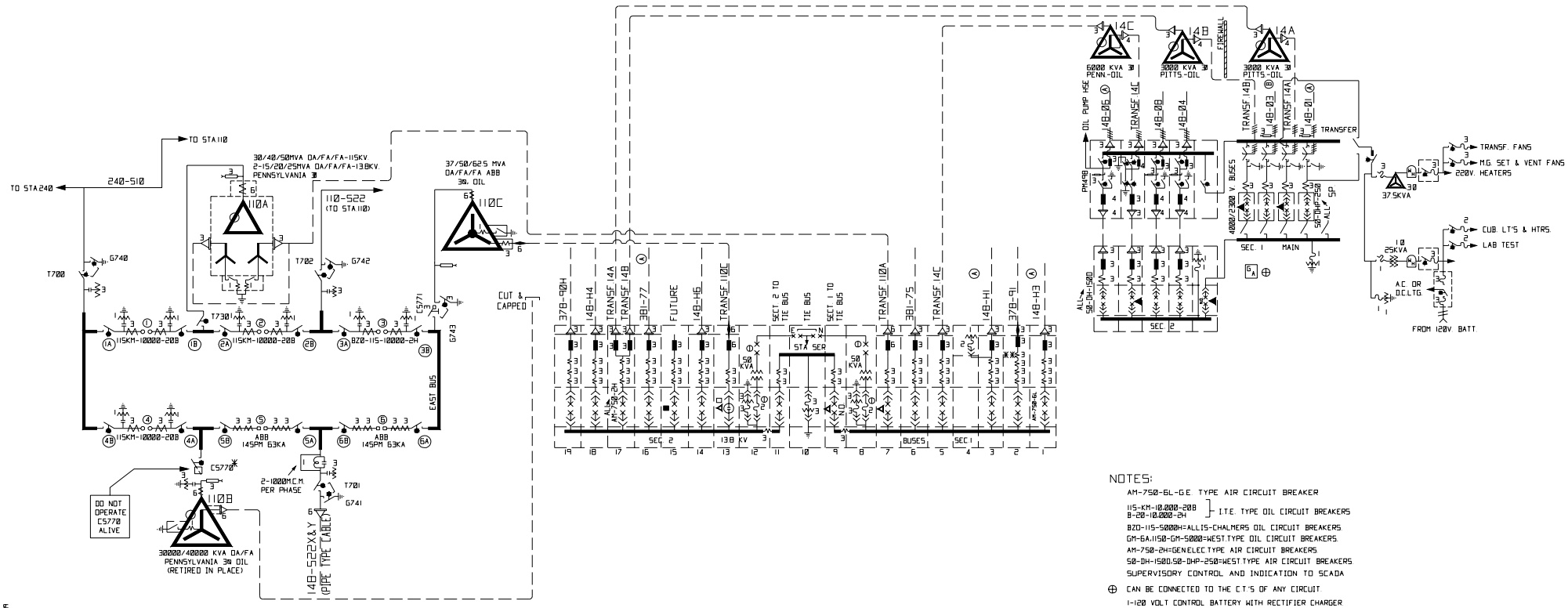

NOTES:

AM-750-6L-G.E. TYPE AIR CIRCUIT BREAKER

115-KM-10,000-20B
B-20-10,000-2H } I.T.E. TYPE OIL CIRCUIT BREAKERS

BZO-115-5000H=ALLIS-CHALMERS OIL CIRCUIT BREAKERS

GM-6A,115O-GM-5000=WEST.TYPE OIL CIRCUIT BREAKERS.

AM-750-2H=GENELEC.TYPE AIR CIRCUIT BREAKERS.

50-DH-1500,50-DHP-250=WEST.TYPE AIR CIRCUIT BREAKERS.

SUPERVISORY CONTROL AND INDICATION TO SCADA

⊕ CAN BE CONNECTED TO THE C.T.'S OF ANY CIRCUIT.

1-120 VOLT CONTROL BATTERY WITH RECTIFIER CHARGER.

Ⓘ KEY INTERLOCKED-THE STA. SER. SEC.BRKR MUST BE OPEN TO RELEASE THE KEY TO PERMIT THE PRIMARY FUSES TO BE WITHDRAWN FROM OPERATING POSITION.

△ 14KV. ABR SCHEME UPON LOSS OF TRANSF. 110A OR 110B, THE SUBJECT TRANSF'S SECONDARY BREAKER WILL OPEN AND THE SECT.1 TO TIE BUS BREAKER WILL CLOSE.

▲ 4KV. ABR SCHEME: UPON LOSS OF EITHER TRANSF. 14A,B OR C THE SUBJECT TRANSFORMERS SECONDARY BREAKER WILL OPEN AND THE 4KV. BUS TIE BREAKER WILL CLOSE.

✱✱ PRIMARY METERING CT's

✱ C570 MANUALLY OPERATED (CRANK); MAKE DEAD TO OPERATE

145PM - ABB, 3000A, 63KA, SF_6 BREAKER

■ GE-AM-13.8-750-1200 AIR CIRCUIT BREAKER

□ GE-VBI-13.8-750-3000 VACUUM CIRCUIT BREAKER

NSTAR ELECTRIC
AN NSTAR COMPANY

148

DATE	DESCRIPTION	BY	CHCK
6/17/02	REVISED DWG. FROM ENGINEER'S MARK-UP	EBA	RM
6/3/02	REVISED DWG. FROM ENGINEER'S MARK-UP	EBA	
2/7/00	UPDATED DRAWING FORM FIELD PRINTS	WJB	

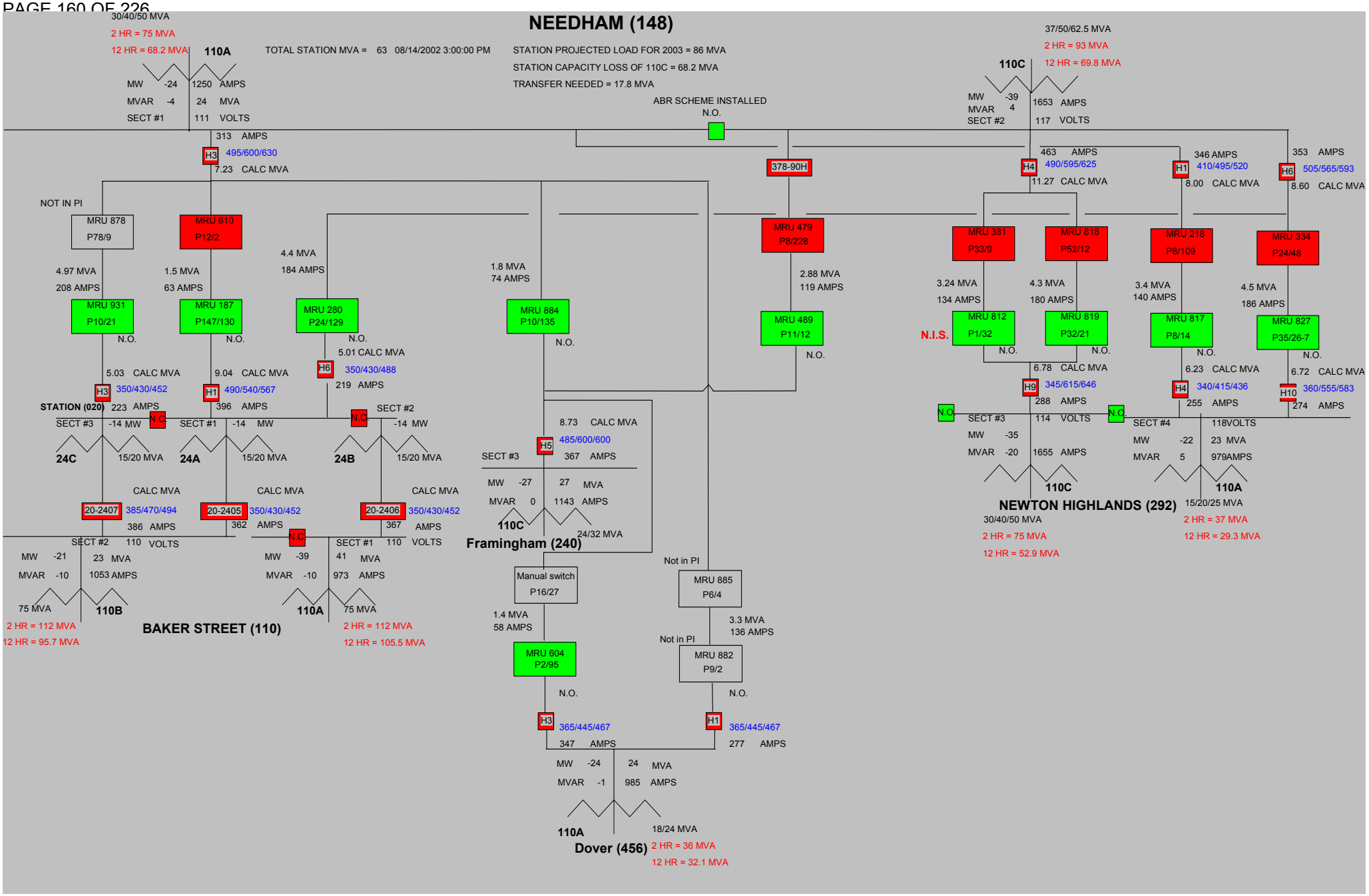
NEEDHAM (148)
TOTAL STATION MVA = 63 08/14/2002 3:00:00 PM
STATION PROJECTED LOAD FOR 2003 = 86 MVA
STATION CAPACITY LOSS OF 110C = 68.2 MVA
TRANSFER NEEDED = 17.8 MVA
ABR SCHEME INSTALLED
N.O.
30/40/50 MVA
2 HR = 75 MVA
12 HR = 68.2 MVA
110A
MW -24 1250 AMPS
MVAR -4 24 MVA
SECT #1 111 VOLTS
313 AMPS
H3 495/600/630
7.23 CALC MVA
37/50/62.5 MVA
2 HR = 93 MVA
12 HR = 69.8 MVA
110C
MW -39
MVAR 4
SECT #2
1653 AMPS
117 VOLTS
378-90H
463 AMPS
H4 490/595/625
11.27 CALC MVA
346 AMPS
H1 410/495/520
8.00 CALC MVA
353 AMPS
H6 505/565/593
8.60 CALC MVA
NOT IN PI
MRU 878 P78/9
MRU 610 P12/2
4.97 MVA 208 AMPS
1.5 MVA 63 AMPS
MRU 931 P10/21
MRU 187 P147/130
N.O.
5.03 CALC MVA
9.04 CALC MVA
H3 350/430/452
H1 490/540/567
STATION (020)
223 AMPS
396 AMPS
SECT #3 -14 MW
SECT #1 -14 MW
SECT #2 -14 MW
N.C.
24C
24A
24B
15/20 MVA
4.4 MVA 184 AMPS
MRU 280 P24/129
5.01 CALC MVA
H6 350/430/488
219 AMPS
1.8 MVA 74 AMPS
MRU 884 P10/135
MRU 479 P8/228
2.88 MVA 119 AMPS
MRU 489 P11/12
MRU 381 P33/9
MRU 818 P52/12
3.24 MVA 134 AMPS
4.3 MVA 180 AMPS
N.I.S.
MRU 812 P1/32
MRU 819 P32/21
6.78 CALC MVA
H9 345/615/646
288 AMPS
114 VOLTS
SECT #3
MW -35
MVAR -20
1655 AMPS
110C
MRU 218 P8/109
MRU 334 P24/48
3.4 MVA 140 AMPS
4.5 MVA 186 AMPS
MRU 817 P8/14
MRU 827 P35/26-7
6.23 CALC MVA
6.72 CALC MVA
H4 340/415/436
H10 360/555/583
255 AMPS
274 AMPS
SECT #4
118VOLTS
MW -22 23 MVA
MVAR 5 979AMPS
110A
NEWTON HIGHLANDS (292)
15/20/25 MVA
30/40/50 MVA
2 HR = 75 MVA
12 HR = 52.9 MVA
2 HR = 37 MVA
12 HR = 29.3 MVA
8.73 CALC MVA
H5 485/600/600
SECT #3 367 AMPS
MW -27 27 MVA
MVAR 0 1143 AMPS
110C
24/32 MVA
Framingham (240)
20-2407 385/470/494
386 AMPS
20-2405 350/430/452
362 AMPS
20-2406 350/430/452
367 AMPS
CALC MVA
SECT #2 110 VOLTS
MW -21 23 MVA
MVAR -10 1053 AMPS
75 MVA
110B
2 HR = 112 MVA
12 HR = 95.7 MVA
MW -39
MVAR -10
SECT #1 110 VOLTS
41 MVA
973 AMPS
110A
75 MVA
2 HR = 112 MVA
12 HR = 105.5 MVA
BAKER STREET (110)
Manual switch P16/27
1.4 MVA 58 AMPS
MRU 604 P2/95
Not in PI
MRU 885 P6/4
3.3 MVA 136 AMPS
MRU 882 P9/2
H3 365/445/467
347 AMPS
H1 365/445/467
277 AMPS
MW -24 24 MVA
MVAR -1 985 AMPS
110A
18/24 MVA
2 HR = 36 MVA
12 HR = 32.1 MVA
Dover (456)

2003 T&D OPERATING STUDY
WALTHAM DISTRICT

STATION #282 WALTHAM

Transformer #110A: ABB 37/50/62.5 MVA 117/14.4 kV
Transformer #110B: Allis-Chalmers 60/80 [89.8] MVA 110/13.8/13.8 kV
Transformer #110C: General Electric 30/40 [44.8] MVA 110/13.8 kV

Overload Ratings:

Transformer	Nameplate	12 hour LTE, 90F Ambient	12 hour LTE, 110F Ambient
110A	37/50/62.5 MVA	81 MVA	74 MVA
110B	60/80 [89.8] MVA	107 MVA	97 MVA
110C	30/40 [44.8] MVA	57 MVA	52 MVA

Station Capabilities:

Total Station Capacity (N)	Station Firm Capacity (LTE)	RADSEC Transfer	Manual Transfer	Total LCC
193 MVA	117 MVA	26 MVA	0 MVA	143 MVA

Switching Actions:

Loss of Transformer #110A:

Open: Circuit Breakers #1 and #2 in Waltham 115kV Ring Bus
Main 110A 13.8kV Circuit Breaker
Disconnect Switch #T733
Close: ABR scheme closes 13.8V bus tie breakers automatically
Circuit Breakers #1 and #2 to restore Waltham 115kV Ring Bus

Loss of Transformer #110B:

Open: Circuit Breakers #9 and #12 in Waltham 115kV Ring Bus
Both Main 110B 13.8kV Circuit Breakers
Disconnect Switch #T731
Close: ABR scheme closes 13.8V bus tie breakers automatically
Circuit Breakers #9 and #12 to restore Waltham 115kV Ring Bus

Loss of Transformer #110C:

Open: Circuit Breakers #4 and #5 in Waltham 115kV Ring Bus
Main 110C 13.8kV Circuit Breaker
Disconnect Switch #T732
Close: ABR scheme closes 13.8V bus tie breakers automatically
Circuit Breakers #4 and #5 to restore Waltham 115kV Ring Bus

For loss of any transformer, transfer of the following DSS lines via RADSEC switches may also be required:

Waltham 282-H7 to Trapelo Rd. 450-H1 via RADSEC MRU 823 for a transfer of 5.9 MVA
Waltham 282-H5 to Trapelo Rd. 450-H8 via RADSEC MRU 835 for a transfer of 7.1 MVA

Station 33 Circuit 33-H2 to Trapelo Rd. 450-H6 via RADSEC MRU 008 for a transfer of 1.2 MVA
Or:
Station 33 Circuit 33-H2 to Watertown 467-H6 via RADSEC MRU 908 for a transfer of 3.0 MVA

Waltham 282-H9 to Watertown 467-H3 via RADSEC MRU 401 for a transfer of 4.8 MVA
Waltham 282-H2 to Trapelo Rd. 450-H2 via RADSEC MRU 057 for a transfer of 0.2 MVA

Waltham 282-H1 to Trapelo Rd. 450-H7 via RADSEC MRU 339 for a transfer of 2.4 MVA
Or:
Waltham 282-H1 to Lexington 320-H6 via RADSEC MRU 954 for a transfer of 0.9 MVA

Waltham 282-H3 to Speen Street 433-H6 via RADSEC MRU 056 for a transfer of 4.1 MVA

Total Transfers (Maximum): 26.0 MVA

Results:

Loading - For the load transfer from 282-H7 to 450-H1, there may be heavy loading conditions on sections of #2 AL conductor that may require an upgrade/reconductoring of these conductors.

For the load transfer from 282-H5 to 450-H8, there may be heavy loading conditions on a section of 500 kcmil cable of circuit 450-H8, but is within applicable emergency ratings.

For the load transfer from 282-H9 to 467-H3, there may be heavy loading conditions on several sections of 800 kmcil cable on circuit 467-H3, but are within applicable emergency ratings.

Voltage For the load transfer of 282-H1 to 450-H7, there may be low voltage conditions that may require the installation of SCADA-switched capacitor banks for post-contingency voltage remediation..

For the load transfer of 282-H3 to 433-H6, there may be low voltage

conditions that may require the installation of SCADA-switched capacitor banks for post-contingency voltage remediation.

Additional Actions Required:

None.

STATION 282

1265 MAIN ST.
WALTHAM
WALTHAM RING
TEL. (617)541-7762

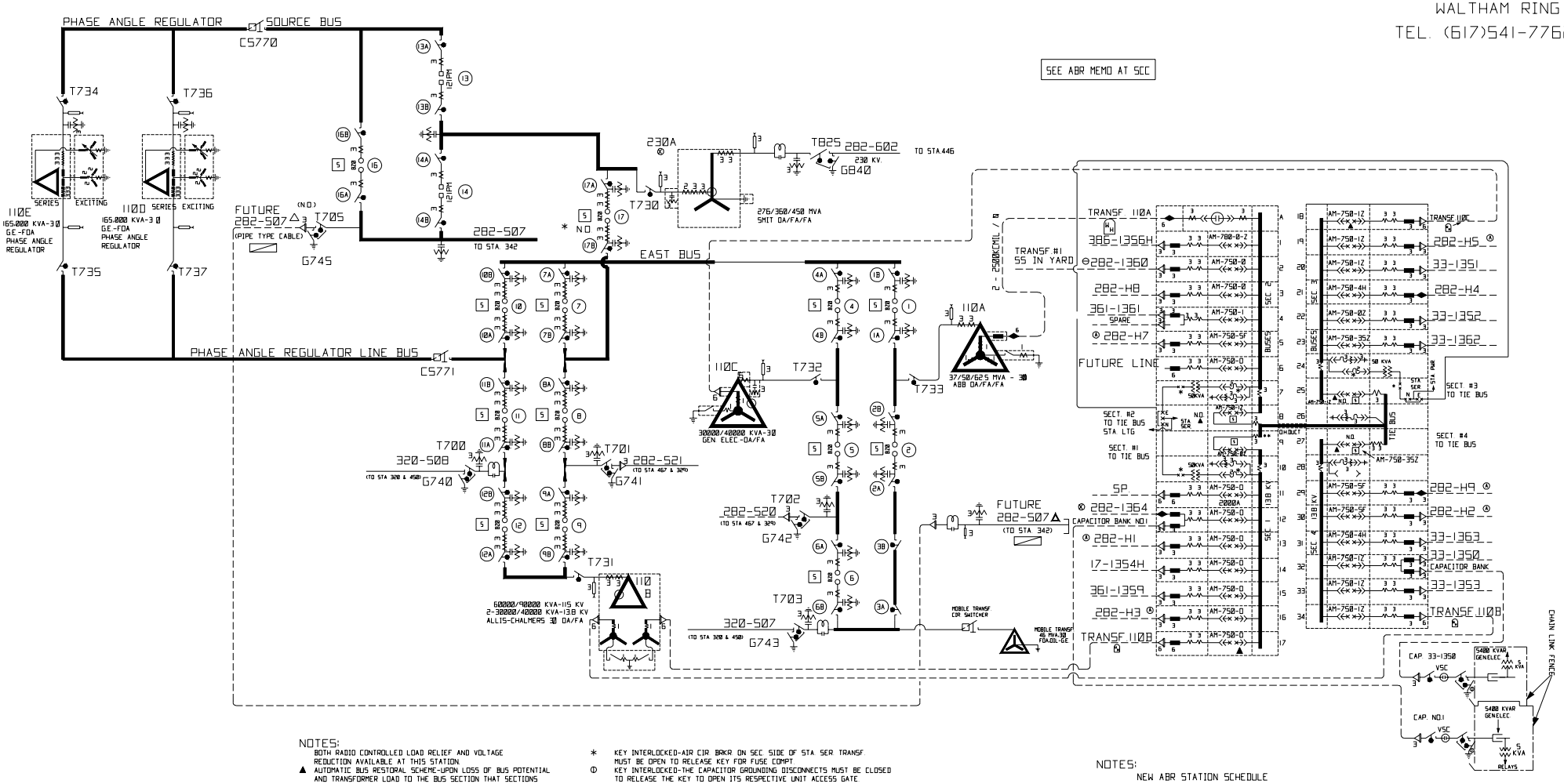

NOTES:

BOTH RADIO CONTROLLED LOAD RELIEF AND VOLTAGE REDUCTION AVAILABLE AT THIS STATION.

▲ AUTOMATIC BUS RESTORAL SCHEME-UPON LOSS OF BUS POTENTIAL AND TRANSFORMER LOAD TO THE BUS SECTION THAT SECTIONS TRANSF. BREAKER WILL OPEN AND THE N.O. TIE BUS BRKR. WILL CLOSE.

△ PHYSICALLY THIS CABLE RUNS THROUGH THE STA. YD. (NOT AROUND IT)

⊗ STA. SERV. FOR 230A AND 110D AND 110E
BZO=ALLIS CHALMERS BZO-115-10000-2 OIL CIRCUIT BREAKERS.
AM-750-0,1,0Z,1Z,3SZ,5F,4H=G.E. AIR CIRCUIT BREAKERS.
1-120 VOLT CONTROL BATTERY WITH CHARGER.
SUPERVISORY SIGNALS AND REMOTE CONTROL TO SCADA.

121PM - ABB 3000A SF6 BREAKER

UNIT "A" IS A G.E. VB1-13.8-750-3000A VACUUM BREAKER

* KEY INTERLOCKED-AIR CIR. BRKR. ON SEC. SIDE OF STA. SER. TRANSF. MUST BE OPEN TO RELEASE KEY FOR FUSE COMPT.

Ⓘ KEY INTERLOCKED-THE CAPACITOR GROUNDING DISCONNECTS MUST BE CLOSED TO RELEASE THE KEY TO OPEN ITS RESPECTIVE UNIT ACCESS GATE.
VSC=ALLIS CHAL. TYPE VACUUM BREAKERS.
1-48 SUPERVISORY CONTROL AND MICROWAVE BATTERY WITH CHGR.

** BUS TIE REMOVED (E/D)
(SECT. #1 TO TIE BUS) IN SERVICE

NOT IN SERVICE

NOTES:

NEW ABR STATION SCHEDULE

SECTION 1 TO 1-2 CLOSED
SECTION 2 TO 1-2 OPEN
SECTION 3 TO 3-4 OPEN
SECTION 4 TO 3-4 OPEN

DATE	DESCRIPTION	BY	CHCK
10/22/02	REWIRED BREAKER 13 & 14 TO 121PM & CHANGED TR. 230A TYPE.	EBA	PSL
9/19/02	MADE T704 & T705 FUTURE AND CHANGED LINE 282-507 DESTINATION TO STA. 342	EBA	
5/23/02	REVISED FOR REPLACEMENT OF TRANSFORMER 110A	JAS	
5/12/00	REVISED LINE NUMBERS	WJB	

NSTAR ELECTRIC
AN NSTAR COMPANY

282

_STA_DIA\sta282dwg, 10/22/02 at 09:28

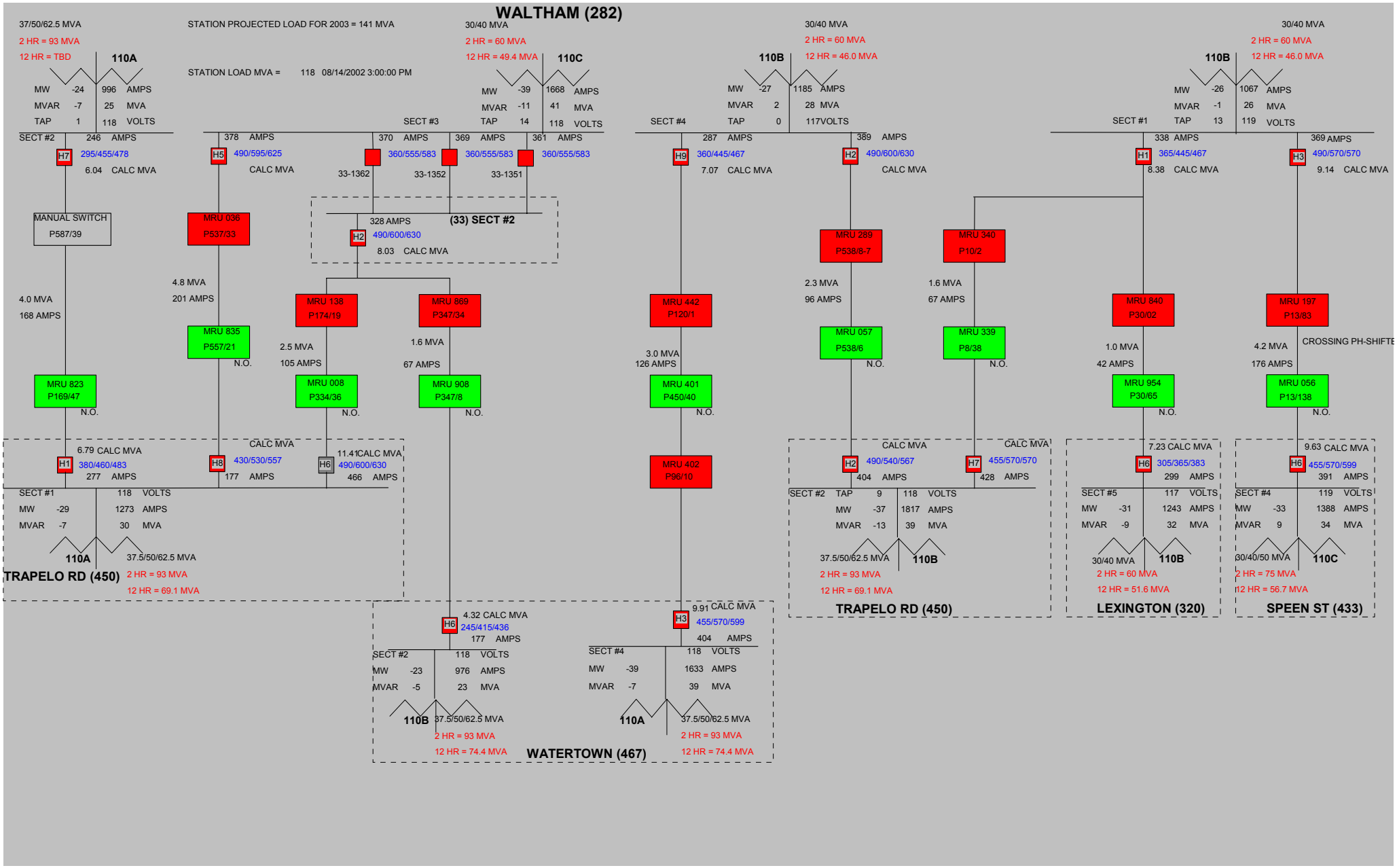
WALTHAM (282)
STATION PROJECTED LOAD FOR 2003 = 141 MVA
STATION LOAD MVA = 118 08/14/2002 3:00:00 PM
37/50/62.5 MVA
2 HR = 93 MVA
12 HR = TBD
110A
MW -24 996 AMPS
MVAR -7 25 MVA
TAP 1 118 VOLTS
SECT #2 246 AMPS
H7 295/455/478
6.04 CALC MVA
MANUAL SWITCH
P587/39
4.0 MVA
168 AMPS
MRU 823
P169/47
N.O.
30/40 MVA
2 HR = 60 MVA
12 HR = 49.4 MVA
110C
MW -39 1668 AMPS
MVAR -11 41 MVA
TAP 14 118 VOLTS
SECT #3
378 AMPS
H5 490/595/625
CALC MVA
MRU 036
P537/33
4.8 MVA
201 AMPS
MRU 835
P557/21
N.O.
370 AMPS
360/555/583
33-1362
369 AMPS
360/555/583
33-1352
361 AMPS
360/555/583
33-1351
328 AMPS
(33) SECT #2
H2 490/600/630
8.03 CALC MVA
MRU 138
P174/19
2.5 MVA
105 AMPS
MRU 008
P334/36
N.O.
MRU 869
P347/34
1.6 MVA
67 AMPS
MRU 908
P347/8
N.O.
6.79 CALC MVA
H1 380/460/483
277 AMPS
CALC MVA
H8 430/530/557
177 AMPS
11.41 CALC MVA
H6 490/600/630
466 AMPS
SECT #1
MW -29 118 VOLTS
MVAR -7 1273 AMPS
30 MVA
110A
37.5/50/62.5 MVA
2 HR = 93 MVA
12 HR = 69.1 MVA
TRAPELO RD (450)
30/40 MVA
2 HR = 60 MVA
12 HR = 46.0 MVA
110B
MW -27 1185 AMPS
MVAR 2 28 MVA
TAP 0 117VOLTS
SECT #4
287 AMPS
H9 360/445/467
7.07 CALC MVA
MRU 442
P120/1
3.0 MVA
126 AMPS
MRU 401
P450/40
N.O.
MRU 402
P96/10
389 AMPS
H2 490/600/630
CALC MVA
MRU 289
P538/8-7
2.3 MVA
96 AMPS
MRU 057
P538/6
N.O.
MRU 340
P10/2
1.6 MVA
67 AMPS
MRU 339
P8/38
N.O.
CALC MVA
H2 490/540/567
404 AMPS
CALC MVA
H7 455/570/570
428 AMPS
SECT #2 TAP 9 118 VOLTS
MW -37 1817 AMPS
MVAR -13 39 MVA
37.5/50/62.5 MVA
110B
2 HR = 93 MVA
12 HR = 69.1 MVA
TRAPELO RD (450)
30/40 MVA
2 HR = 60 MVA
12 HR = 46.0 MVA
110B
MW -26 1067 AMPS
MVAR -1 26 MVA
TAP 13 119 VOLTS
SECT #1
338 AMPS
H1 365/445/467
8.38 CALC MVA
MRU 840
P30/02
1.0 MVA
42 AMPS
MRU 954
P30/65
N.O.
7.23 CALC MVA
H6 305/365/383
299 AMPS
SECT #5
MW -31 117 VOLTS
MVAR -9 1243 AMPS
32 MVA
30/40 MVA
110B
2 HR = 60 MVA
12 HR = 51.6 MVA
LEXINGTON (320)
369 AMPS
H3 490/570/570
9.14 CALC MVA
MRU 197
P13/83
CROSSING PH-SHIFTE
4.2 MVA
176 AMPS
MRU 056
P13/138
N.O.
9.63 CALC MVA
H6 455/570/599
391 AMPS
SECT #4
MW -33 119 VOLTS
MVAR 9 1388 AMPS
34 MVA
30/40/50 MVA
110C
2 HR = 75 MVA
12 HR = 56.7 MVA
SPEEN ST (433)
4.32 CALC MVA
H6 245/415/436
177 AMPS
SECT #2
MW -23 118 VOLTS
MVAR -5 976 AMPS
23 MVA
110B
37.5/50/62.5 MVA
2 HR = 93 MVA
12 HR = 74.4 MVA
9.91 CALC MVA
H3 455/570/599
404 AMPS
SECT #4
MW -39 118 VOLTS
MVAR -7 1633 AMPS
39 MVA
110A
37.5/50/62.5 MVA
2 HR = 93 MVA
12 HR = 74.4 MVA
WATERTOWN (467)

2003 T&D OPERATING STUDY
WALTHAM DISTRICT

STATION #292 NEWTON HIGHLANDS

Transformer #110A: McGraw-Edison 30/40/50 [56] MVA 115/13.8/13.8 kV
Transformer #110B: McGraw-Edison 30/40/50 [56] MVA 115/13.8/13.8 kV
Transformer #110C: Westinghouse 60/80/100 MVA 115/13.8/13.8 kV

Overload Ratings:

Transformer	Nameplate	12 hour LTE, 90F Ambient	12 hour LTE, 110F Ambient
110A	30/40/50 [56] MVA	66 MVA	61 MVA
110B	30/40/50 [56] MVA	72 MVA	67 MVA
110C	60/80/100 MVA	108 MVA	99 MVA

Station Capabilities:

Total Station Capacity (N)	Station Firm Capacity (LTE)	RADSEC Transfer	Manual Transfer	Total LCC
212 MVA	143 MVA	17.1 MVA	3.7 MVA	163.8 MVA

Switching Actions:

Loss of Transformer #110A:

Open: Circuit Switcher #CS770
Both Main 110A 13.8kV Circuit Breakers
Close: ABR scheme closes 13.8V bus tie breakers automatically

Loss of Transformer #110B:

Open: Circuit Switcher #CS771
Both Main 110B 13.8kV Circuit Breakers
Close: ABR scheme closes 13.8V bus tie breakers automatically

Loss of Transformer #110C:

Open: Circuit Switcher #CS772
Both Main 110C 13.8kV Circuit Breakers
Close: ABR scheme closes 13.8V bus tie breakers automatically

[For loss of any transformer, transfer of the following DSS lines via RADSEC switches may also be required]:

Newton Highlands 292-H4 to Needham 148-H1 via RADSEC MRU 817 for a transfer of 2.1 MVA

Newton Highlands 292-H10 to Needham 148-H6 via RADSEC MRU 827 for a transfer of 3.1 MVA

Newton Highlands 292-H9 to Needham 148-H4 via RADSEC MRU 812 for a transfer of 2.5 MVA

Newton Highlands 292-H8 to Watertown 467-H12 via RADSEC MRU 473 for a transfer of 2.9 MVA

Newton Highlands 292-82H, 292-215H, 41-211XY via Station 17 to Watertown 467-H12 via RADSEC MRU 437 for a transfer of 1.8 MVA

Newton Highlands 292-H7 to Waltham 33-1351, 33-1352, and 33-1362 via Station 33 33-H3 via RADSEC MRU 569 for a transfer of 3.7 MVA

Newton Highlands 292-H2 to Waltham 282-H8 via RADSEC MRU 112 for a transfer of 2.4 MVA

Newton Highlands 292-H5 to Brighton 329-H6 via RADSEC MRU 299 for a transfer of 2.3 MVA

Total Transfer switching = 20.8 MVA

Results:

Loading - No heavy loading conditions were identified.

Voltage - No low voltage conditions were identified.

Additional Actions Required:

Install additional RADSEC switches to increases transfer switching by 5 MVA

Continue with the planned load relief of the Boston College line group, which would provide approximately 10 MVA of load relief. This load would be transferred to Watertown Station #467 , which has approximately 20 MVA of spare capacity.

NOTES

AM-138-500-SH=GEN. ELEC. TYPE AIR CIRCUIT BREAKERS.
DZ-600, DZ-2000=ALLIS-CHAL. TYPE OIL CIRCUIT BREAKERS
FC-500=ALLIS-CHAL. TYPE AIR CIRCUIT BREAKERS.

① KEY INTERLOCKED-THE SEC. BRKR. MUST BE OPEN TO RELEASE THE KEY TO PERMIT WITHDRAWAL OF THE PRIMARY FUSES FROM OPERATING POSITION.
SUPERVISORY CONTROL AND INDICATION OF ALL 13.8KV BRKRS. TO STA. 329

✱ ELECTRICALLY INTERLOCKED AGAINST OPERATION WITH TRANSF. ALIVE.
1-24 VOLT BATTERY WITH CHGR. FOR SEC. (14KV)
1-24 VOLT BATTERY WITH CHGR. FOR SEC. (24KV)
1-120 VOLT BATTERY WITH MOTOR GEN. CHGR.

Ⓐ CAN BE CONN. TO C.T.'S OF ANY 4KV CIR. ON SEC. 1

Ⓑ CAN BE CONN. TO C.T.'S OF ANY 4KV CIR. ON SEC. 2

⊕ TOTAL AMPS OF THE THREE 5000 KVA TRANSFORMERS
SUPERVISORY SIGNAL SYSTEM CONTROLLED BY SCADA.
BOTH RADIO CONTROLLED AND LOAD RELIEF AND VOLTAGE REDUCTION AVAILABLE AT THIS STATION.
1-48 VOLT BATTERY WITH CHARGER FOR SUPERVISORY CONTROL EQUIPMENT.

△ TRANSFORMER 14B SEC. BREAKER CLOSES AUTOMATICALLY UPON THE LOSS OF EITHER TR. 14A OR TR. 14C.

ALL BUS TIE BREAKERS RUN NORMALLY OPEN WITH THE EXCEPTION OF 3-7 BUS TIE BREAKER

ON SECT. 3 BUS TIE BREAKERS ON SECT. 1-2 2-3, 3-4, 5-6, 6-7, AND 7-8 ARE ON AUTOMATIC BUS RESTORAL CONTROL SCHEME WITH SELECTOR SWITCHES SET FOR AUTOMATIC OPERATION.

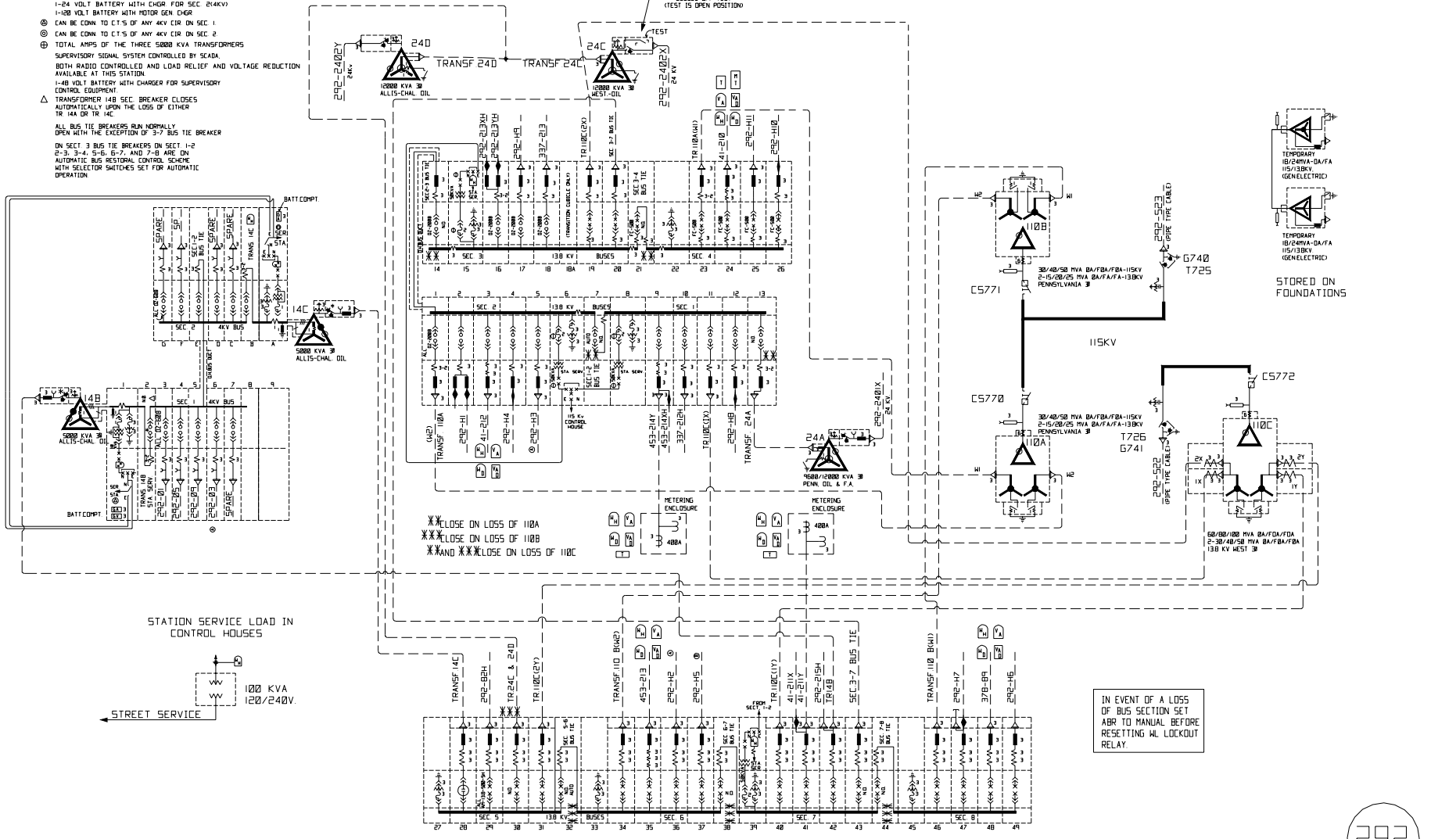

DATE	DESCRIPTION	BY	CHCK
8/7/02	CHANGED 41-211XY TO 41-211Y	WJB	RBB
4/3/02	UPDATED 41-213 TO 453-213	EBA	RBB
5/12/00	UPDATED PER FIELD PRINT	WJB	

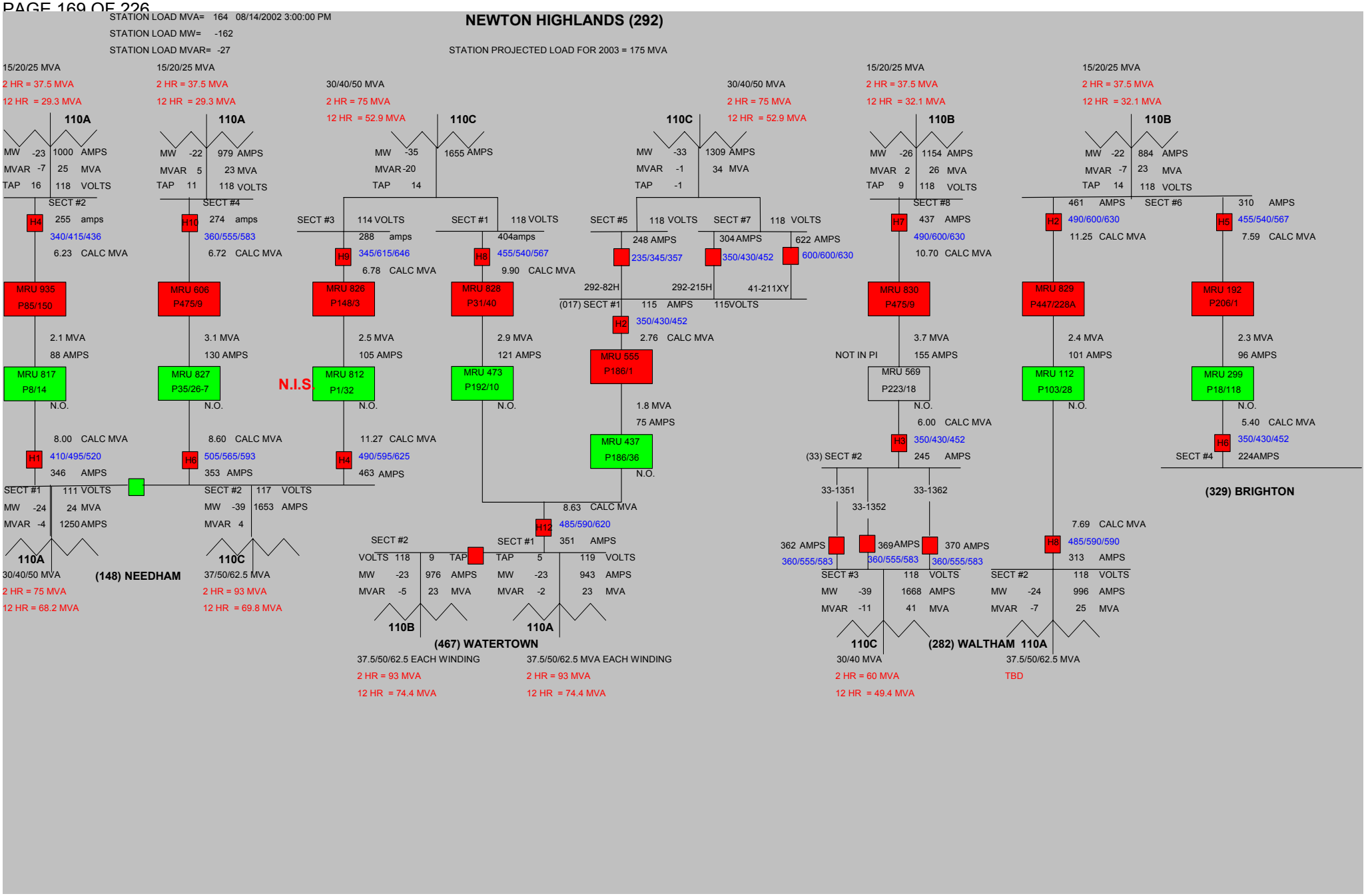
STATION LOAD MVA= 164 08/14/2002 3:00:00 PM
STATION LOAD MW= -162
STATION LOAD MVAR= -27
NEWTON HIGHLANDS (292)
STATION PROJECTED LOAD FOR 2003 = 175 MVA
15/20/25 MVA
2 HR = 37.5 MVA
12 HR = 29.3 MVA
110A
MW -23 1000 AMPS
MVAR -7 25 MVA
TAP 16 118 VOLTS
SECT #2
H4 255 amps
340/415/436
6.23 CALC MVA
MRU 935
P85/150
2.1 MVA
88 AMPS
MRU 817
P8/14
N.O.
8.00 CALC MVA
H1 410/495/520
346 AMPS
15/20/25 MVA
2 HR = 37.5 MVA
12 HR = 29.3 MVA
110A
MW -22 979 AMPS
MVAR 5 23 MVA
TAP 11 118 VOLTS
SECT #4
H10 274 amps
360/555/583
6.72 CALC MVA
MRU 606
P475/9
3.1 MVA
130 AMPS
MRU 827
P35/26-7
N.O.
8.60 CALC MVA
H6 505/565/593
353 AMPS
30/40/50 MVA
2 HR = 75 MVA
12 HR = 52.9 MVA
110C
MW -35 1655 AMPS
MVAR -20
TAP 14
SECT #3 114 VOLTS
288 amps
H9 345/615/646
6.78 CALC MVA
MRU 826
P148/3
2.5 MVA
105 AMPS
MRU 812
P1/32
N.O.
11.27 CALC MVA
H4 490/595/625
463 AMPS
SECT #1 118 VOLTS
404amps
H8 455/540/567
9.90 CALC MVA
MRU 828
P31/40
2.9 MVA
121 AMPS
MRU 473
P192/10
N.O.
N.I.S.
SECT #1 111 VOLTS
MW -24 24 MVA
MVAR -4 1250 AMPS
110A
30/40/50 MVA
2 HR = 75 MVA
12 HR = 68.2 MVA
(148) NEEDHAM
SECT #2 117 VOLTS
MW -39 1653 AMPS
MVAR 4
110C
37/50/62.5 MVA
2 HR = 93 MVA
12 HR = 69.8 MVA
30/40/50 MVA
2 HR = 75 MVA
12 HR = 52.9 MVA
110C
MW -33 1309 AMPS
MVAR -1 34 MVA
TAP -1
SECT #5 118 VOLTS
248 AMPS
235/345/357
SECT #7 118 VOLTS
304 AMPS
350/430/452
622 AMPS
600/600/630
292-82H
292-215H
41-211XY
(017) SECT #1 115 AMPS 115VOLTS
H2 350/430/452
2.76 CALC MVA
MRU 555
P186/1
1.8 MVA
75 AMPS
MRU 437
P186/36
N.O.
8.63 CALC MVA
H12 485/590/620
SECT #2
VOLTS 118 9 TAP
MW -23 976 AMPS
MVAR -5 23 MVA
110B
SECT #1 351 AMPS
TAP 5 119 VOLTS
MW -23 943 AMPS
MVAR -2 23 MVA
110A
(467) WATERTOWN
37.5/50/62.5 EACH WINDING
2 HR = 93 MVA
12 HR = 74.4 MVA
37.5/50/62.5 MVA EACH WINDING
2 HR = 93 MVA
12 HR = 74.4 MVA
15/20/25 MVA
2 HR = 37.5 MVA
12 HR = 32.1 MVA
110B
MW -26 1154 AMPS
MVAR 2 26 MVA
TAP 9 118 VOLTS
SECT #8
H7 437 AMPS
490/600/630
10.70 CALC MVA
MRU 830
P475/9
3.7 MVA
155 AMPS
NOT IN PI
MRU 569
P223/18
N.O.
6.00 CALC MVA
H3 350/430/452
(33) SECT #2 245 AMPS
33-1351
33-1352
33-1362
362 AMPS
360/555/583
369 AMPS
360/555/583
370 AMPS
360/555/583
SECT #3 118 VOLTS
MW -39 1668 AMPS
MVAR -11 41 MVA
110C
30/40 MVA
2 HR = 60 MVA
12 HR = 49.4 MVA
(282) WALTHAM
15/20/25 MVA
2 HR = 37.5 MVA
12 HR = 32.1 MVA
110B
MW -22 884 AMPS
MVAR -7 23 MVA
TAP 14 118 VOLTS
461 AMPS
SECT #6
H2 490/600/630
11.25 CALC MVA
MRU 829
P447/228A
2.4 MVA
101 AMPS
MRU 112
P103/28
N.O.
7.69 CALC MVA
H8 485/590/590
313 AMPS
SECT #2 118 VOLTS
MW -24 996 AMPS
MVAR -7 25 MVA
110A
37.5/50/62.5 MVA
TBD
310 AMPS
H5 455/540/567
7.59 CALC MVA
MRU 192
P206/1
2.3 MVA
96 AMPS
MRU 299
P18/118
N.O.
5.40 CALC MVA
H6 350/430/452
SECT #4 224AMPS
(329) BRIGHTON

2003 T&D OPERATING STUDY
WALTHAM DISTRICT

STATION #320 LEXINGTON

Transformer #110A: Westinghouse 60/80 [89.6] MVA 115/13.8/13.8 kV
Transformer #110B: Westinghouse 60/80 [89.6] MVA 115/13.8/13.8 kV (A)

(A) Bus Section #4 was destroyed in a fire, Transformer 110B has only one winding in-service.

Overload Ratings:

Transformer	Nameplate	12 hour LTE, 90F Ambient	12 hour LTE, 110F Ambient
110A	60/80 [89.6] MVA	120 MVA	109 MVA
110B	30/40 MVA	60 MVA	54 MVA

Station Capabilities:

Total Station Capacity (N)	Station Firm Capacity (LTE)	RADSEC Transfer	Manual Transfer	Total LCC
120 MVA	54 MVA	27.6 MVA	0 MVA	81.6 MVA

Switching Actions:

Loss of Transformer #110A:

Open: Circuit Breakers #1 and #2 in Lexington 115kV Ring Bus
Both Main 110A 13.8kV Circuit Breakers
Disconnect Switch #T730
Close: Close 13.8kV Bus Tie Breaker
Circuit Breakers #1 and #2 in Lexington 115kV Ring Bus

Loss of Transformer #110B:

Open: Circuit Breakers #4 and #5 in Lexington 115kV Ring Bus
Both Main 110B 13.8kV Circuit Breakers
Disconnect Switch #T731
Close: Close 13.8kV Bus Tie Breaker
Circuit Breakers #4 and #5 in Lexington 115kV Ring Bus

For loss of any transformer, transfer of the following DSS lines via RADSEC switches may also be required:

Lexington 320-H1 to Trapelo Road 450-H3 via RADSEC MRU 936 and to Trapelo Road 450-H7 via RADSEC MRU 417 for a total transfer of 8.6 MVA

Lexington 320-H2 to Hartwell Ave. 533-H4 via RADSEC MRU 905 and to Trapelo Road 450-H6 via RADSEC MRU 528 for a transfer of 10.5 MVA

Lexington 320-H5 to Trapelo Road 450-H6 via RADSEC MRU 129 for a transfer of 8.5 MVA.

Total Transfer: 27.6 MVA

Results:

Loading	-	For the load transfer of 320-H1 to 450-H3 and 450-H7 there may be heavy loading conditions on several sections of 336 HDX conductor, but are within applicable LTE limits. For the load transfer of 320-H2 to 450-H5 and 533-H4 there may be heavy loading conditions on several sections of 336 HDX conductor, but are within applicable LTE limits.
Voltage		For the load transfer of 320-H1 to 450-H3 and 450-H7 there may be a low voltage condition that may require the installation of a switched capacitor bank for post-contingency voltage remediation.

Additional Actions Required:

None.

STATION 320
OFF MARRETT ROAD
LEXINGTON
LEXINGTON RING

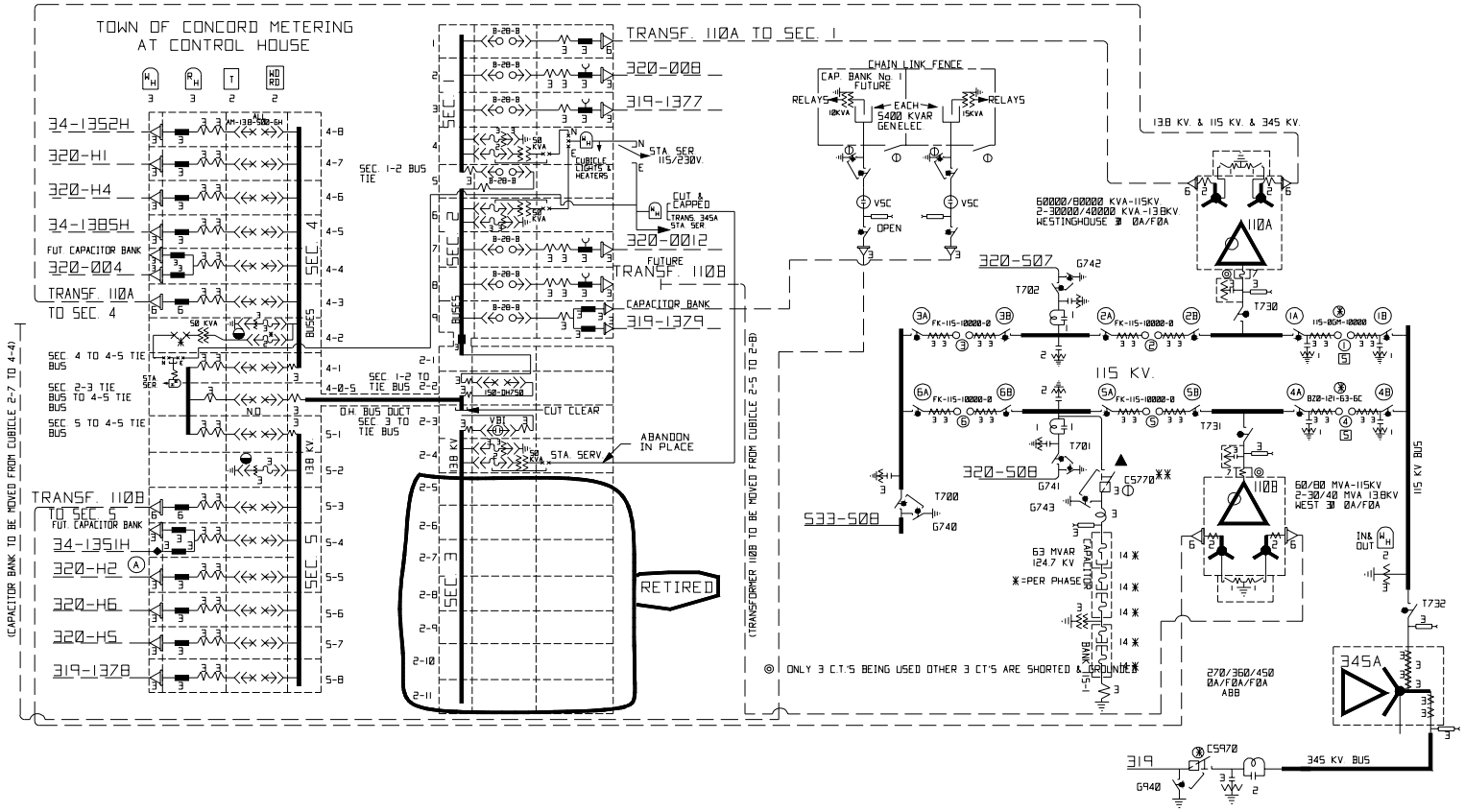

NOTES:
B20-121-63-6C = ALLIS CHALMERS TYPE OIL CIRCUIT BREAKER
B-28-B=WEST. TYPE OIL CIRCUIT BREAKERS
VBI = G.E. VACUUM BREAKERS
AM-138-500-6H GENERAL ELECTRIC TYPE AIR CIRCUIT BREAKERS
150-DH750=WEST. TYPE AIR CIRCUIT BREAKERS
V5C=ALLIS CHAL. TYPE VACUUM BREAKERS
SUPERVISORY CONTROL AND TELEMETERING SYSTEM TO SEC.
FK-115-10000-0=G.E. TYPE OIL CIRCUIT BREAKER
1-130 VOLT CONTROL BATTERY WITH CHARGER
Ⓘ KEY INTERLOCKED-THE CAPACITOR GROUND DISCONNECTS MUST BE CLOSED TO RELEASE THE KEY TO OPEN ITS RESPECTIVE UNIT ACCESS GATE

** DO NOT OPERATE C5770 WHEN ENERGIZED
1-48 VOLT SUPERVISORY CONTROL BATTERY WITH CHARGER
BOTH RADIO CONTROLLED LOAD RELIEF AND VOLTAGE REDUCTION AVAILABLE AT THIS STATION.
115-0CM-10000=WESTINGHOUSE TYPE OIL CIRCUIT BREAKER
Ⓐ ELECTRICAL INTERLOCK-BREAKERS 1 & 4 MUST BE OPEN BEFORE CIRCUIT SWITCHER CAN BE OPENED
NON-STANDARD BUS POTENTIAL TRANSFORMERS RATIO 12:2:1
* KEY INTERLOCKED-THE STA. SERV. SEC. AIR BRK. MUST BE OPEN TO PERMIT WITHDRAWAL OF THE PRI. FUSES FROM OPERAT. POSITION

Ⓘ CIRCUIT SWITCHER EQUIPPED WITH SHUNT TRIP DEVICE.
▲ DO NOT CLOSE CIRCUIT SWITCHER MANUALLY WHEN ENERGIZED

*** TEMP STATION SERVICE SUPPLY FROM CIRCUIT 320-H4

DATE	DESCRIPTION	BY	CHCK
8/28/02	ADDED MISSING BREAKERS TO CUBICLE 5-6 & 5-8	EBA	RBB
1/23/01	UPDATED TRANSF. 345A AND LINES IN CUB. 2 & 7	WJB	EFL

NSTAR ELECTRIC
AN NSTAR COMPANY

320

.STA.DIA\Sta320.dwg 08/28/02 at 10:40

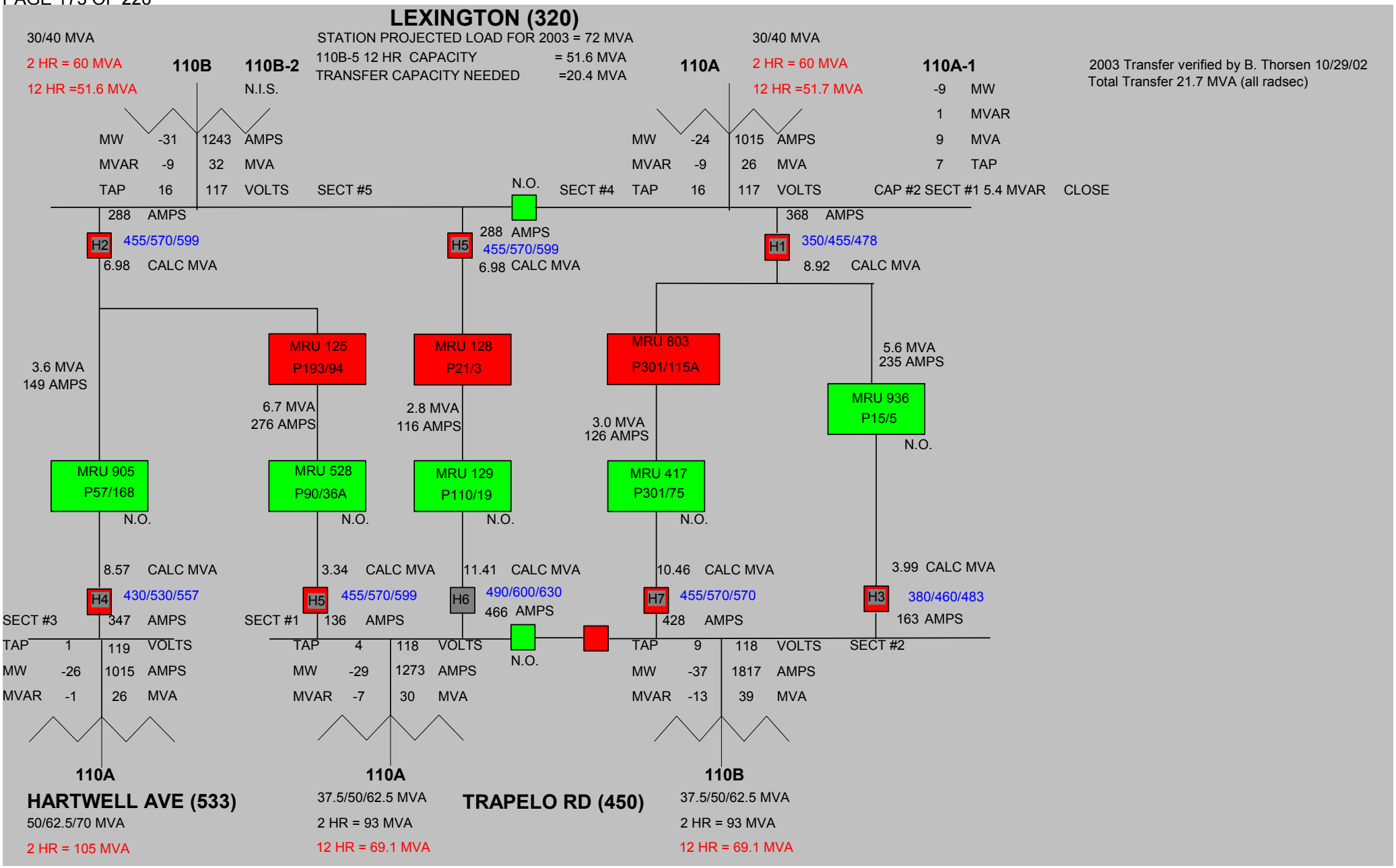
LEXINGTON (320)
STATION PROJECTED LOAD FOR 2003 = 72 MVA
110B-5 12 HR CAPACITY = 51.6 MVA
TRANSFER CAPACITY NEEDED =20.4 MVA
2003 Transfer verified by B. Thorsen 10/29/02
Total Transfer 21.7 MVA (all radsec)
30/40 MVA
2 HR = 60 MVA
12 HR =51.6 MVA
110B
110B-2
N.I.S.
MW -31 1243 AMPS
MVAR -9 32 MVA
TAP 16 117 VOLTS
SECT #5
288 AMPS
H2 455/570/599
6.98 CALC MVA
N.O.
SECT #4
H5 288 AMPS
455/570/599
6.98 CALC MVA
30/40 MVA
2 HR = 60 MVA
12 HR =51.7 MVA
110A
MW -24 1015 AMPS
MVAR -9 26 MVA
TAP 16 117 VOLTS
368 AMPS
H1 350/455/478
8.92 CALC MVA
110A-1
-9 MW
1 MVAR
9 MVA
7 TAP
CAP #2 SECT #1 5.4 MVAR CLOSE
3.6 MVA
149 AMPS
MRU 125
P193/94
6.7 MVA
276 AMPS
MRU 128
P21/3
2.8 MVA
116 AMPS
MRU 803
P301/115A
3.0 MVA
126 AMPS
5.6 MVA
235 AMPS
MRU 936
P15/5
N.O.
MRU 905
P57/168
N.O.
MRU 528
P90/36A
N.O.
MRU 129
P110/19
N.O.
MRU 417
P301/75
N.O.
8.57 CALC MVA
H4 430/530/557
SECT #3
347 AMPS
TAP 1 119 VOLTS
MW -26 1015 AMPS
MVAR -1 26 MVA
3.34 CALC MVA
H5 455/570/599
SECT #1
136 AMPS
TAP 4 118 VOLTS
MW -29 1273 AMPS
MVAR -7 30 MVA
11.41 CALC MVA
H6 490/600/630
466 AMPS
N.O.
10.46 CALC MVA
H7 455/570/570
428 AMPS
TAP 9 118 VOLTS
MW -37 1817 AMPS
MVAR -13 39 MVA
3.99 CALC MVA
H3 380/460/483
163 AMPS
SECT #2
110A
HARTWELL AVE (533)
50/62.5/70 MVA
2 HR = 105 MVA
110A
37.5/50/62.5 MVA
2 HR = 93 MVA
12 HR = 69.1 MVA
TRAPELO RD (450)
110B
37.5/50/62.5 MVA
2 HR = 93 MVA
12 HR = 69.1 MVA

2003 T&D OPERATING STUDY
WALTHAM DISTRICT

STATION #391 BURLINGTON

Transformer #110A: Westinghouse 60/80 [89.6] MVA 115/13.8/13.8 kV
Transformer #110B: Westinghouse 60/80 [89.6] MVA 115/13.8/13.8 kV

Overload Ratings:

Transformer	Nameplate	12 hour LTE, 90F Ambient	12 hour LTE, 110F Ambient
110A	60/80 [89.6] MVA	120 MVA	109 MVA
110B	60/80 [89.6] MVA	119 MVA	108 MVA

Station Capabilities:

Total Station Capacity (N)	Station Firm Capacity (LTE)	RADSEC Transfer	Manual Transfer	Total LCC
160 MVA	100 MVA	13.6 MVA	6.3 MVA	119.9 MVA

Switching Actions:

Loss of Transformer #110A:

Open: Circuit Switcher #CS773
Both Main 110A 13.8kV Circuit Breakers
Close: ABR scheme closes 13.8kV Bus Ties Automatically

Loss of Transformer #110B:

Open: Circuit Switcher #CS772
Both Main 110B 13.8kV Circuit Breakers
Close: ABR scheme closes 13.8kV Bus Ties Automatically

For loss of any transformer, transfer of the following DSS lines via RADSEC switches may also be required:

Burlington 391-H11 to Woburn 351-1385H via RADSEC MRU 111 for a transfer of 6.3 MVA
Burlington 391-H3 to Hartwell Ave. 533-H4 via RADSEC MRU 049 for a transfer of 0.8 MVA
Burlington 391-H7 to Hartwell Ave. 487-1376H via RADSEC MRU 838 for a transfer of 2.6 MVA
Burlington 391-H8 to Hartwell Ave. 533-H7 via RADSEC MRU 577 for a transfer of 3.9 MVA
Burlington 391-H10 to Hartwell Ave. 345-1379H via manual switch. P84/29 for a transfer of 6.3 MVA

Total Transfer: 19.9 MVA

Results:

Loading	-	For a load transfer of 391-H11 to 351-1385H, there may be heavy loading conditions on 500 kcmil underground cable section, but are within applicable emergency ratings.
Voltage	-	For a load transfer of 391-H7 to 487-1376H there may be low voltage conditions that may require the installation switched capacitors for post-contingency voltage remediation. For a load transfer of 391-H8 to 533-H7 there may be low voltage conditions that may require the installation switched capacitors for post-contingency voltage remediation. For a load transfer of 391-H11 to 351-1385H there may be low voltage conditions that may require the installation switched capacitors for post-contingency voltage remediation.

Additional Actions Required:

None

M-COLOR

COLOR KEY	
COLOR	DESCRIPTION
	DISTRIBUTION/RETAIL
	POWER SUPPLY TRANSMISSION

NOTES:

** NORMALLY OPEN - CLOSES AUTO. ON LOSS OF BUS POTENTIAL AND TRANSFORMER LOAD ON SECTION #1 OR #2.

*** NORMALLY OPEN - CLOSES AUTO. ON LOSS OF BUS POTENTIAL AND TRANSFORMER LOAD ON SECTION #3 OR #4.

STATION 391

70 MIDDLESEX ST. NEAR WHEELER ST. BURLINGTON

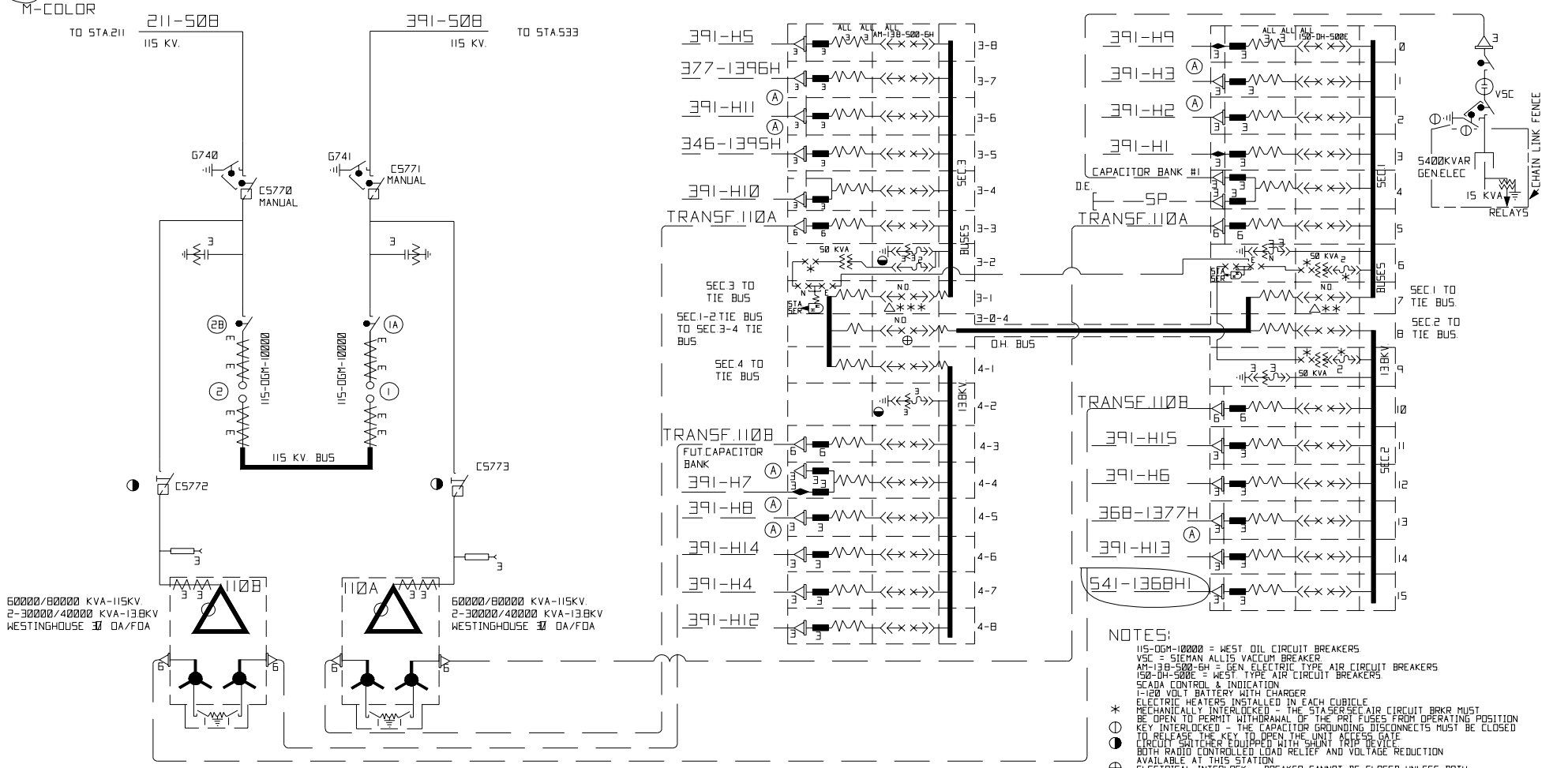

NOTES:

115-OGM-10000 = WEST. OIL CIRCUIT BREAKERS
VSC = SIEMAN ALLIS VACCUM BREAKER
AM-138-500-6H = GEN. ELECTRIC TYPE AIR CIRCUIT BREAKERS
150-DH-500E = WEST. TYPE AIR CIRCUIT BREAKERS.
SCADA CONTROL & INDICATION
1-120 VOLT BATTERY WITH CHARGER
ELECTRIC HEATERS INSTALLED IN EACH CUBICLE
* MECHANICALLY INTERLOCKED - THE STA.SER.SEC.AIR CIRCUIT BRKR. MUST BE OPEN TO PERMIT WITHDRAWAL OF THE PRI FUSES FROM OPERATING POSITION
KEY INTERLOCKED - THE CAPACITOR GROUNDING DISCONNECTS MUST BE CLOSED TO RELEASE THE KEY TO OPEN THE UNIT ACCESS GATE
CIRCUIT SWITCHER EQUIPPED WITH SHUNT TRIP DEVICE
BOTH RADIO CONTROLLED LOAD RELIEF AND VOLTAGE REDUCTION AVAILABLE AT THIS STATION
ELECTRICAL INTERLOCK - BREAKER CANNOT BE CLOSED UNLESS BOTH BREAKERS OF 1 TRANSFORMER ARE OPEN
NON-STANDARD BUS POTENTIAL TRANSFORMERS RATIO 12:2:1
BREAKER CANNOT BE CLOSED UNTIL AUTO-TIE SCHEME IS SET TO MANUAL

BOSTON EDISON COMPANY
DELIVERY ENGINEERING DEPARTMENT
ELECTRICAL DESIGN DRAFTING GROUP

391

DRAWN BY VCS
CHECKED BY

DATE JUNE 24,1996

391-H3 to 533-H4 load transfer. No problems during load transfer.

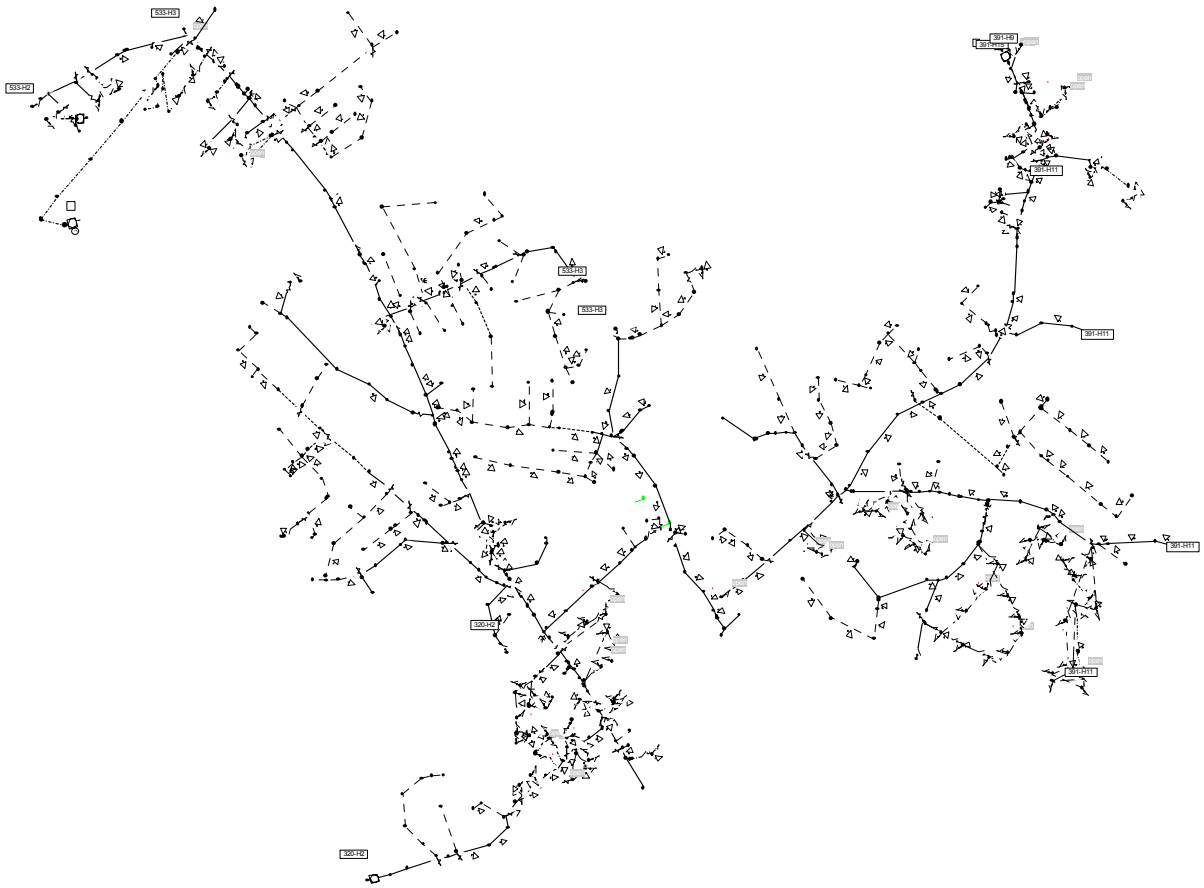

Voltage Drop Summary

Feeder	**391-H3**
Substation	STA391
Source Voltage	14.28 kVLL, 0.00 Deg.

Parameters

Analysis Type	Unbalanced Voltage Drop
Flag Levels	Summer, Nominal
Load Model	Nominal
Load Factor	1.00 x (kW) 1.00 x (kVAR)

Load Summary

	Total Load			
	kW	kVAR	kVA	PF(%)
Total load read (Non-adjusted)	4687.06	2402.13	5266.76	88.99
Total load used (Adjusted)	4687.02	2402.02	5266.67	88.99
Total shunt capacitor (Adjusted)		1433.86		
Total shunt reactor (Adjusted)		0		
Total load from motor	0	0	0	0
Total power from generator	0	0	0	0
Total power to other feeder(s) (Loop)	0	0	0	0
Total conductor capacitances		82.87		
Total losses	22.63	46.9	52.07	43.46
Total power from substation	4709.64	932.19	4801.01	98.1

Abnormal Conditions

	Phase	Count	Worst Condition	%
	A	0	1100728-304	87.1
Overload	B	0	1100728-20	59.97
	C	0	1100728-304	92.86
	A	0	1100728-413	97.11
Low Voltage	B	0	1100728-469	98.72
	C	0	1100728-417	97.34
	A	0	1100728-3	103.48
High Voltage	B	0	1100728-3	103.48
	C	0	1100728-3	103.48

Voltage Drop Summary

Feeder	**533-H4**
Substation	STA533
Source Voltage	14.28 kVLL, 0.00 Deg.

Parameters

Analysis Type	Unbalanced Voltage Drop
Flag Levels	Summer, Nominal
Load Model	Nominal
Load Factor	1.00 x (kW) 1.00 x (kVAR)

Load Summary

	Total Load			
	kW	kVAR	kVA	PF(%)
Total load read (Non-adjusted)	8696.63	5478.6	10278.45	84.61
Total load used (Adjusted)	8696.63	5478.6	10278.45	84.61
Total shunt capacitor (Adjusted)		3184.89		
Total shunt reactor (Adjusted)		0		
Total load from motor	0	0	0	0
Total power from generator	0	0	0	0
Total power to other feeder(s) (Loop)	0	0	0	0
Total conductor capacitances		154.38		
Total losses	140.91	605.01	621.2	22.68
Total power from substation	8837.54	2744.34	9253.83	95.5

Abnormal Conditions

	Phase	Count	Worst Condition	%
	A	0	1101070-17	68.57
Overload	B	0	1101070-17	78.34
	C	0	1101070-17	82.73
	A	0	1101070-578	99.95
Low Voltage	B	0	1100728-117	99
	C	0	1101070-279	98.84
	A	0	1101070-158	103.48
High Voltage	B	0	1101070-158	103.48
	C	0	1101070-158	103.48

391-H7 to 487-1376H & H1 load transfer. Low voltage on circuit 487-1376H& H1 occurred during load transfer. The voltage problem is rectified with the installation of two 1350kVAR capacitor banks on circuit 487-1376H1 on sections 11001187-3 and 11001187-116.

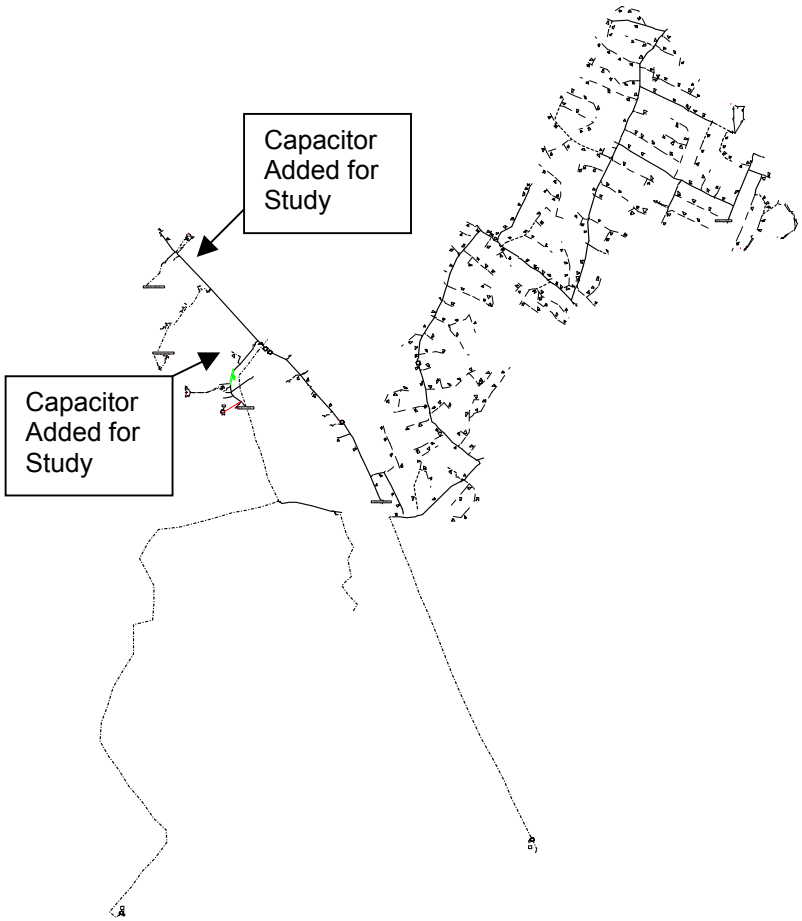

Voltage Drop Summary

Feeder	**391-H7**
Substation	STA391
Source Voltage	14.28 kVLL, 0.00 Deg.

Parameters

Analysis Type	Unbalanced Voltage Drop
Flag Levels	Summer, Nominal
Load Model	Nominal
Load Factor	1.00 x (kW) 1.00 x (kVAR)

Load Summary

	Total Load			
	kW	kVAR	kVA	PF(%)
Total load read (Non-adjusted)	5020.65	2536.03	5624.8	89.26
Total load used (Adjusted)	5019.65	2534.95	5623.42	89.26
Total shunt capacitor (Adjusted)		2835.18		
Total shunt reactor (Adjusted)		0		
Total load from motor	0	0	0	0
Total power from generator	0	0	0	0
Total power to other feeder(s) (Loop)	0	0	0	0
Total conductor capacitances		238.74		
Total losses	85.35	496.92	504.2	16.93
Total power from substation	5105	-42.04	5105.17	-100

Abnormal Conditions

	Phase	Count	Worst Condition	%
	A	0	1100732-789	46.24
Overload	B	0	1100732-789	38.92
	C	0	1100732-781	51.02
	A	0	1100732-91	101.84
Low Voltage	B	0	1100732-791	103.48
	C	0	1100732-572	100.08
	A	0	1100732-792	103.48
High Voltage	B	0	1100732-127	104.33
	C	0	1100732-792	103.48

Voltage Drop Summary

Feeder	**487-1376H & H1**
Substation	STA533
Source Voltage	14.28 kVLL, 0.00 Deg.

Parameters

Analysis Type	Unbalanced Voltage Drop
Flag Levels	Summer, Nominal
Load Model	Nominal
Load Factor	1.00 x (kW) 1.00 x (kVAR)

Load Summary

	Total Load			
	kW	kVAR	kVA	PF(%)
Total load read (Non-adjusted)	11800.06	1719.52	11924.69	98.95
Total load used (Adjusted)	11806.73	1718.59	11931.15	98.96
Total shunt capacitor (Adjusted)		2612.73		
Total shunt reactor (Adjusted)		0		
Total load from motor	0	0	0	0
Total power from generator	0	0	0	0
Total power to other feeder(s) (Loop)	0	0	0	0
Total conductor capacitances		564.53		
Total losses	367.76	4125.87	4142.23	8.88
Total power from substation	12174.49	2667.2	12463.23	97.68

Abnormal Conditions

	Phase	Count	Worst Condition	%
	A	0	1101300-11	98.62
Overload	B	0	1101300-11	93.94
	C	0	1101300-11	84.43
	A	0	1100732-658	98.14
Low Voltage	B	0	1101187-118	97.15
	C	0	1100732-658	98.86
	A	0	1101300-73	103.48
High Voltage	B	0	1101300-73	103.48
	C	0	1101300-73	103.48

391-H8 to 533-H7 load transfer: Low voltage on circuit 533-H7 occurred during load transfer. The voltage problem is rectified with the installation of one 1350kVAR capacitor bank on circuit 533-H7 on section 11001073-6.

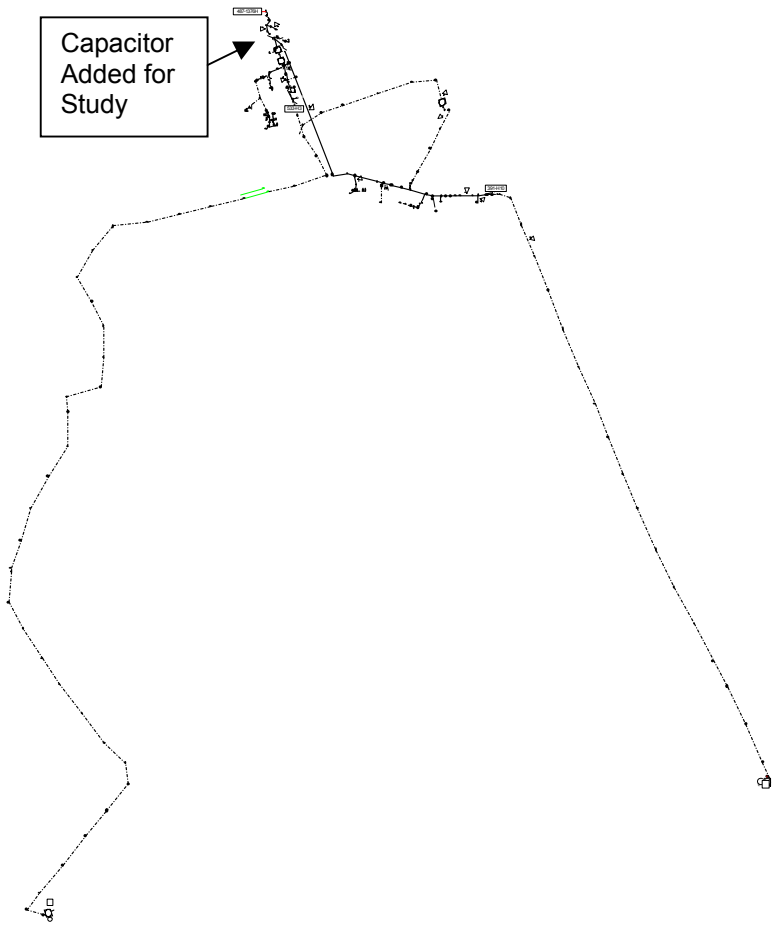

Voltage Drop Summary

Feeder	**391-H8**
Substation	STA391
Source Voltage	14.28 kVLL, 0.00 Deg.

Parameters

Analysis Type	Unbalanced Voltage Drop
Flag Levels	Summer, Nominal
Load Model	Nominal
Load Factor	1.00 x (kW) 1.00 x (kVAR)

Load Summary

	Total Load			
	kW	kVAR	kVA	PF(%)
Total load read (Non-adjusted)	0	0	0	0
Total load used (Adjusted)	0	0	0	0
Total shunt capacitor (Adjusted)		0		
Total shunt reactor (Adjusted)		0		
Total load from motor	0	0	0	0
Total power from generator	0	0	0	0
Total power to other feeder(s) (Loop)	0	0	0	0
Total conductor capacitances		3.22		
Total losses	0	0	0	0
Total power from substation	0	-3.22	3.22	0

Abnormal Conditions

	Phase	Count	Worst Condition	%
	A	0	1100733-95	0.02
Overload	B	0	1100733-95	0.02
	C	0	1100733-95	0.02
	A	0	1100733-95	103.48
Low Voltage	B	0	1100733-95	103.48
	C	0	1100733-95	103.48
	A	0	1100733-93	103.48
High Voltage	B	0	1100733-93	103.48
	C	0	1100733-93	103.48

Voltage Drop Summary

Feeder	**533-H7**
Substation	STA533
Source Voltage	14.28 kVLL, 0.00 Deg.

Parameters

Analysis Type	Unbalanced Voltage Drop
Flag Levels	Summer, Nominal
Load Model	Nominal
Load Factor	1.00 x (kW) 1.00 x (kVAR)

Load Summary

	Total Load			
	kW	kVAR	kVA	PF(%)
Total load read (Non-adjusted)	9445.02	5964.76	11170.8	84.55
Total load used (Adjusted)	9440.19	5957.19	11162.68	84.57
Total shunt capacitor (Adjusted)		5088.13		
Total shunt reactor (Adjusted)		0		
Total load from motor	0	0	0	0
Total power from generator	0	0	0	0
Total power to other feeder(s) (Loop)	0	0	0	0
Total conductor capacitances		573.9		
Total losses	212.5	2443.8	2453.02	8.66
Total power from substation	9652.7	2738.96	10033.77	96.2

Abnormal Conditions

	Phase	Count	Worst Condition	%
	A	0	1100733-3618912	89.51
Overload	B	0	1100733-3618912	90.84
	C	0	1101073-4	99.33
	A	0	1100733-62	96.41
Low Voltage	B	0	1100733-58	97.25
	C	0	1100733-67	96.26
	A	0	1101073-102	103.48
High Voltage	B	0	1101073-102	103.48
	C	0	1101073-102	103.48

391-H11 to 351-1385H1 (via DSS Line 351-1385H) load transfer. Line 351-1385H.is overloaded in the feeder section, phase 1 and 3 are within emergency limits, phase 2 marginally within its emergency limit. Also the circuits experienced low voltage in three areas, the low voltage can be corrected with the installation of three 1350 kVAR capacitor banks, for this analysis a capacitor bank was installed on the following sections: Sections 1100722-566 and 1100722-195 of Circuit 391-H11 and Section 1100625-246 of circuit 351-1385H1.

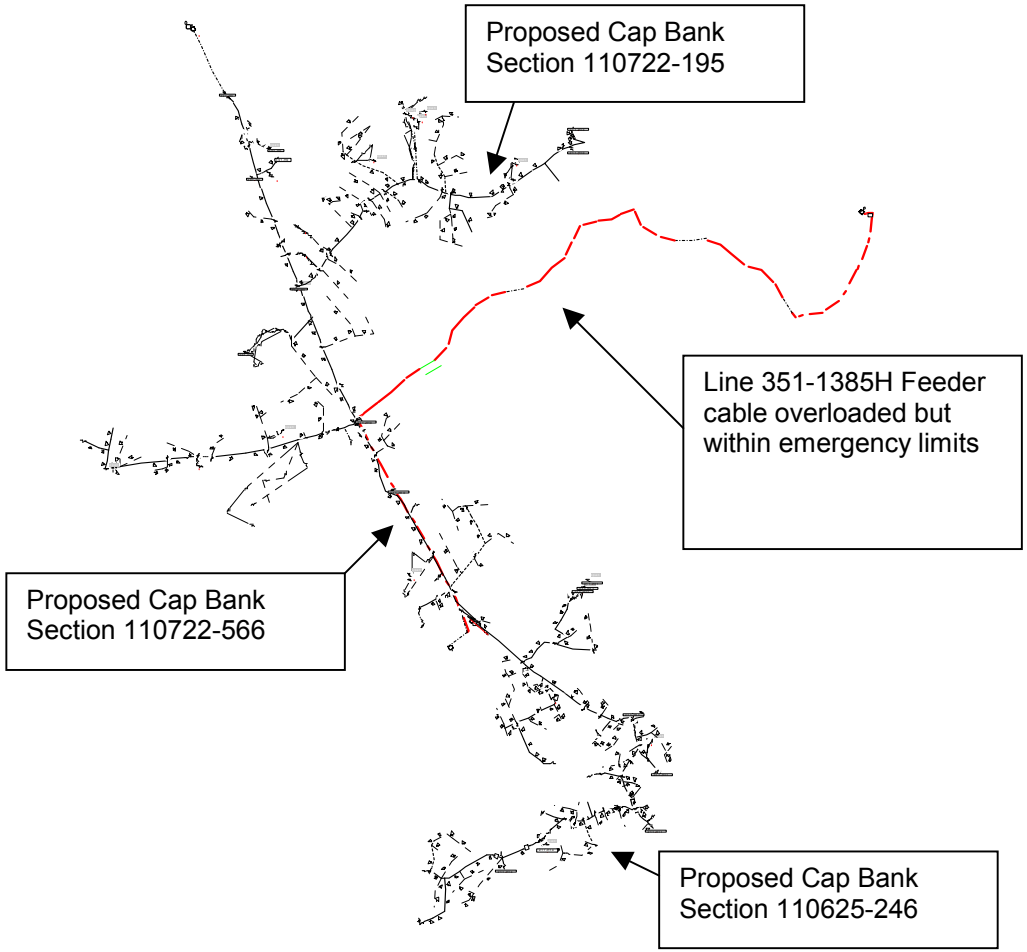

Voltage Drop Summary

Feeder	**351-1385H & H1**
Substation	STA211
Source Voltage	14.28 kVLL, 0.00 Deg.

Parameters

Analysis Type	Unbalanced Voltage Drop
Flag Levels	Summer, Nominal
Load Model	Nominal
Load Factor	1.00 x (kW) 1.00 x (kVAR)

Load Summary

	Total Load			
	kW	kVAR	kVA	PF(%)
Total load read (Non-adjusted)	9572.68	2649.93	9932.69	96.38
Total load used (Adjusted)	9573.44	2650.96	9933.69	96.37
Total shunt capacitor (Adjusted)		4047.94		
Total shunt reactor (Adjusted)		0		
Total load from motor	0	0	0	0
Total power from generator	0	0	0	0
Total power to other feeder(s) (Loop)	0	0	0	0
Total conductor capacitances		512.97		
Total losses	478.82	740.6	881.91	54.29
Total power from substation	10052.26	-1169.35	10120.04	-99.33

Abnormal Conditions

	Phase	Count	Worst Condition	%
	A	50	1100624-3	112.67
Overload	B	50	1100624-3	124.07
	C	50	1100624-3	114.14
	A	0	1100625-239	99.68
Low Voltage	B	0	1100722-100	96.99
	C	0	1100625-307	100.36
	A	0	1100722-453	104.22
High Voltage	B	0	1100624-2	103.48
	C	0	1100722-453	103.88

Voltage Drop Summary

Feeder	**391-H11**	
Substation	STA391	
Source Voltage	14.28 kVLL,	0.00 Deg.

Parameters

Analysis Type	Unbalanced Voltage Drop	
Flag Levels	Summer, Nominal	
Load Model	Nominal	
Load Factor	1.00 x (kW)	1.00 x (kVAR)

Load Summary

	Total Load			
	kW	kVAR	kVA	PF(%)
Total load read (Non-adjusted)	0	0	0	0
Total load used (Adjusted)	0	0	0	0
Total shunt capacitor (Adjusted)		0		
Total shunt reactor (Adjusted)		0		
Total load from motor	0	0	0	0
Total power from generator	0	0	0	0
Total power to other feeder(s) (Loop)	0	0	0	0
Total conductor capacitances		6.78		
Total losses	0	0	0	0
Total power from substation	0	-6.78	6.78	0

Abnormal Conditions

	Phase	Count	Worst Condition	%
	A	0	1100722-2	0.04
Overload	B	0	1100722-2	0.04
	C	0	1100722-2	0.04
	A	0	1100722-2	103.48
Low Voltage	B	0	1100722-2	103.48
	C	0	1100722-2	103.48
	A	0	1100722-3	103.48
High Voltage	B	0	1100722-3	103.48
	C	0	1100722-3	103.48

Feeder Id	Section Id	Equipment Id	Phase	VA	VB	VC	VA (kVLN)	VB (kVLN)	VC (kVLN)	IA (Amps)	IB (Amps)	IC (Amps)	Load A (%)	Load B (%)	Load C (%)	Thru Power A (kW)	Thru Power B (kW)	Thru Power C (kW)	Thru Power A (kVAR)	Thru Power B (kVAR)	Thru Power C (kVAR)
351-1385H	1100624-3	500/3H_SRC	ABC	124.1	124.1	124.2	8.2	8.2	8.2	394.3	434.3	399.5	113	124	114	3212	3568	3269	-498	-274	-400
351-1385H	1100624-4	500/3H_SRC	ABC	124.1	124.1	124.2	8.2	8.2	8.2	394.3	434.2	399.5	113	124	114	3211	3567	3269	-498	-275	-400
351-1385H	1100624-7	500/3H_SRC	ABC	124.1	124	124.2	8.2	8.2	8.2	394.3	434.2	399.5	113	124	114	3211	3567	3269	-498	-275	-401
351-1385H	1100624-18	500/3H_SRC	ABC	124	123.9	124.2	8.2	8.2	8.2	394.3	434.2	399.5	113	124	114	3210	3565	3269	-498	-276	-402
351-1385H	1100624-24	500/3H_SRC	ABC	123.9	123.7	124.2	8.2	8.2	8.2	394.2	434.2	399.4	113	124	114	3207	3560	3268	-498	-281	-405
351-1385H	1100624-31	500/3H_SRC	ABC	123.8	123.5	124.2	8.2	8.2	8.2	394.2	434.2	399.4	113	124	114	3205	3555	3267	-498	-286	-408
351-1385H	1100624-34	500/3H_SRC	ABC	123.7	123.4	124.2	8.2	8.2	8.2	394.1	434.1	399.3	113	124	114	3201	3548	3266	-498	-293	-413
351-1385H	1100624-36	500/3H_SRC	ABC	123.6	123.2	124.2	8.2	8.2	8.2	394.1	434.1	399.3	113	124	114	3199	3544	3266	-498	-296	-415
351-1385H	1100624-33	500/3H	ABC	123.6	123.2	124.2	8.2	8.2	8.2	394	434.1	399.2	113	124	114	3195	3538	3265	-498	-302	-418
351-1385H	1100624-26	500/3H	ABC	123.6	123	124	8.2	8.2	8.2	394	434.1	399.2	113	124	114	3194	3534	3262	-497	-301	-419
351-1385H	1100624-23	500/3H	ABC	123.5	122.9	124	8.2	8.2	8.2	393.9	434	399.1	113	124	114	3193	3531	3260	-497	-300	-420
351-1385H	1100624-21	500/3H	ABC	123.5	122.8	123.9	8.2	8.2	8.2	393.9	434	399.1	113	124	114	3192	3528	3258	-496	-299	-420
351-1385H	1100624-19	500/3H	ABC	123.5	122.7	123.8	8.2	8.1	8.2	393.8	434	399.1	113	124	114	3191	3525	3255	-495	-299	-421
351-1385H	1100624-17	500/3H	ABC	123.4	122.6	123.8	8.2	8.1	8.2	393.8	434	399	113	124	114	3190	3522	3253	-495	-298	-421
351-1385H	1100624-13	500/3H	ABC	123.4	122.5	123.7	8.2	8.1	8.2	393.8	433.9	399	113	124	114	3189	3519	3252	-495	-298	-422
351-1385H	1100624-12	500/3H	ABC	123.3	122.2	123.5	8.2	8.1	8.2	393.6	433.9	398.9	113	124	114	3186	3511	3246	-493	-296	-423
351-1385H	1100624-10	500/3H	ABC	123.3	122.1	123.4	8.2	8.1	8.2	393.6	433.9	398.9	113	124	114	3185	3508	3243	-492	-295	-424
351-1385H	1100624-1	500/3H	ABC	123.3	122	123.4	8.2	8.1	8.2	393.6	433.8	398.8	112	124	114	3184	3505	3241	-492	-295	-424
351-1385H	1100624-6	500/3H	ABC	123.2	121.9	123.3	8.2	8.1	8.2	393.5	433.8	398.8	112	124	114	3183	3502	3239	-491	-294	-425
351-1385H	1100624-8	500/3H	ABC	123.2	121.9	123.3	8.2	8.1	8.2	393.5	433.8	398.8	112	124	114	3182	3500	3237	-491	-294	-425
351-1385H	1100624-9	500/3H	ABC	123.2	121.8	123.2	8.2	8.1	8.2	393.5	433.8	398.8	112	124	114	3182	3498	3236	-491	-293	-426
351-1385H	1100624-11	500/3H	ABC	123.2	121.7	123.1	8.2	8.1	8.2	393.4	433.8	398.7	112	124	114	3181	3495	3234	-490	-293	-426
351-1385H	1100624-16	500/3H	ABC	123.1	121.6	123.1	8.2	8.1	8.2	393.4	433.7	398.7	112	124	114	3180	3492	3232	-490	-292	-427
351-1385H	1100624-20	500/3H	ABC	123.1	121.5	123	8.2	8.1	8.2	393.3	433.7	398.7	112	124	114	3179	3489	3230	-489	-292	-427
351-1385H	1100624-22	500/3H	ABC	123.1	121.4	122.9	8.2	8.1	8.2	393.3	433.7	398.6	112	124	114	3178	3486	3227	-488	-291	-428
351-1385H	1100624-25	500/3H	ABC	123.1	121.3	122.9	8.2	8.1	8.2	393.3	433.7	398.6	112	124	114	3177	3484	3225	-488	-291	-428
351-1385H	1100624-27	500/3H	ABC	123	121.2	122.8	8.2	8	8.2	393.2	433.6	398.6	112	124	114	3176	3481	3223	-487	-290	-429
351-1385H	1100624-30	500/3H	ABC	123	121	122.7	8.2	8	8.1	393.1	433.6	398.5	112	124	114	3174	3474	3219	-486	-289	-430
351-1385H	1100624-32	500/3H	ABC	122.9	120.9	122.6	8.2	8	8.1	393.1	433.6	398.4	112	124	114	3173	3471	3216	-486	-288	-430
351-1385H	1100624-35	500/3H	ABC	122.9	120.8	122.6	8.2	8	8.1	393.1	433.6	398.4	112	124	114	3172	3468	3214	-485	-288	-431
351-1385H	1100624-37	500/3H	ABC	122.8	120.7	122.6	8.2	8	8.1	393	433.5	398.4	112	124	114	3170	3465	3214	-485	-291	-433
351-1385H	1100624-38	500/3H	ABC	122.8	120.6	122.5	8.2	8	8.1	393	433.5	398.3	112	124	114	3168	3462	3214	-485	-294	-435
351-1385H	1100624-39	500/3H	ABC	122.8	120.5	122.5	8.2	8	8.1	392.9	433.5	398.3	112	124	114	3167	3459	3211	-484	-293	-436
351-1385H	1100624-40	500/3H	ABC	122.7	120.4	122.4	8.1	8	8.1	392.9	433.5	398.3	112	124	114	3166	3456	3209	-484	-293	-436
351-1385H	1100624-41	500/3H	ABC	122.7	120.3	122.3	8.1	8	8.1	392.9	433.5	398.2	112	124	114	3165	3453	3207	-483	-292	-437

351-1385H	1100624-42	500/3H	ABC	122.7	120.2	122.3	8.1	8	8.1	392.8	433.4	398.2	112	124	114	3164	3450	3205	-483	-292	-437
351-1385H	1100624-43	500/3H	ABC	122.7	120.1	122.2	8.1	8	8.1	392.8	433.4	398.2	112	124	114	3163	3447	3202	-482	-291	-438
351-1385H	1100624-44	500/3H	ABC	122.6	120	122.1	8.1	8	8.1	392.7	433.4	398.1	112	124	114	3162	3444	3200	-482	-291	-438
351-1385H	1100624-45	500/3H	ABC	122.6	119.9	122.1	8.1	8	8.1	392.7	433.4	398.1	112	124	114	3161	3441	3198	-481	-290	-439
351-1385H	1100624-46	500/3H	ABC	122.6	119.9	122.1	8.1	8	8.1	392.7	433.4	398.1	112	124	114	3160	3439	3197	-481	-290	-439
351-1385H	1100624-47	500/3H	ABC	122.6	119.9	122.1	8.1	8	8.1	392.7	433.3	398.1	112	124	114	3160	3438	3197	-481	-291	-440
351-1385H	1100624-48	500/3H	ABC	122.4	119.6	122.1	8.1	7.9	8.1	392.7	433.3	398	112	124	114	3159	3437	3197	-481	-292	-441
351-1385H	1100624-49	500/3H	ABC	122.3	119.4	122.1	8.1	7.9	8.1	392.6	433.3	398	112	124	114	3155	3429	3196	-481	-300	-446
351-1385H	1100624-50	500/3H	ABC	122.2	119.2	122.1	8.1	7.9	8.1	392.5	433.2	397.9	112	124	114	3150	3421	3194	-481	-308	-451
351-1385H	1100624-51	500/3H	ABC	122	119	122.1	8.1	7.9	8.1	392.4	433.2	397.8	112	124	114	3146	3415	3194	-481	-314	-455
351-1385H	1100624-52	500/3H	ABC	121.9	118.7	122.1	8.1	7.9	8.1	392.3	433.2	397.8	112	124	114	3142	3407	3193	-481	-322	-460
351-1385H	1100624-57	500/3H	ABC	121.8	118.6	122.2	8.1	7.9	8.1	392.3	433.1	397.7	112	124	114	3137	3399	3192	-481	-329	-464
351-1385H	1100624-59	500/3H	ABC	121.8	118.5	122.2	8.1	7.9	8.1	392.2	433.1	397.6	112	124	114	3135	3395	3191	-481	-333	-467
351-1385H	1100624-60	500/3H	ABC	121.7	118.5	122.2	8.1	7.9	8.1	392.2	433.1	397.6	112	124	114	3134	3392	3191	-481	-336	-469
351-1385H	1100624-56	500/3H	ABC	121.7	118.4	122.2	8.1	7.9	8.1	392.1	433	397.5	112	124	114	3132	3389	3190	-478	-336	-468

2003 T&D OPERATING STUDY
WALTHAM DISTRICT

STATION #450 TRAPELO RD.

Transformer #110A: North American 37.5/50/62.5 MVA 117/14.4 kV
Transformer #110B: North American 37.5/50/62.5 MVA 117/14.4 kV

Overload Ratings:

Transformer	Nameplate	12 hour LTE, 90F Ambient	12 hour LTE, 110F Ambient
110A	37.5/50/62.5 MVA	81 MVA	74 MVA
110B	37.5/50/62.5 MVA	81 MVA	74 MVA

Station Capabilities:

Total Station Capacity (N)	Station Firm Capacity (LTE)	RADSEC Transfer		Total LCC
125 MVA	69 MVA	13.6 MVA	0 MVA	82.6 MVA

Switching Actions:

Loss of Transformer #110A:

Open: Circuit Switcher #CS771
Main 110A 13.8kV Circuit Breaker
Close: ABR scheme closes 13.8kV Bus Ties Automatically

Loss of Transformer #110B:

Open: Circuit Switcher #CS770
Main 110B 13.8kV Circuit Breaker
Close: ABR scheme closes 13.8kV Bus Ties Automatically

For loss of any transformer, transfer of the following DSS lines via RADSEC switches may also be required:

Trapelo Rd. 450-H5 to Lexington 320-H2 via RADSEC MRU 528 for a transfer of 1.1 MVA
Trapelo Rd. 450-H1 to Waltham 282-H7 via RADSEC MRU 823 for a transfer of 6.6 MVA
Trapelo Rd. 450-H7 to Waltham 282-H1 via RADSEC MRU 339 for a transfer of 1.3 MVA
Trapelo Rd. 450-H2 to Waltham 282-H2 via RADSEC MRU 057 for a transfer of 3.6 MVA
Trapelo Rd. 450-H3 to Lexington 320-H1 via RADSEC MRU 936 for a transfer of 1.0 MVA
Total Transfer: 13.6 MVA

Results:

Loading		No heavy loading conditions were identified.
Voltage	-	For the load transfer from 450-H3 to 320-H1, there may be low post-contingency voltage conditions that may require the installation of SCADA switched capacitor banks for post-contingency voltage remediation.

Additional Actions Required:

Install three additional RADSEC controlled switches to increase the Trapelo Road Station #450 to Waltham Sta #282 transfer switching by 5 MVA.

STATION 450

1435 TRAPELO ROAD
AT SMITH STREET
WALTHAM

TEL. #(617)424-2824

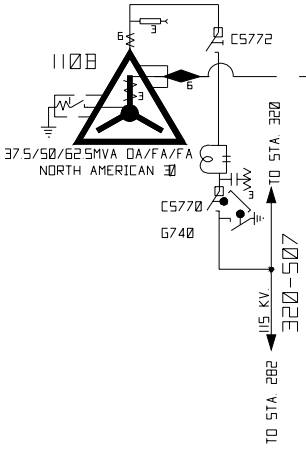

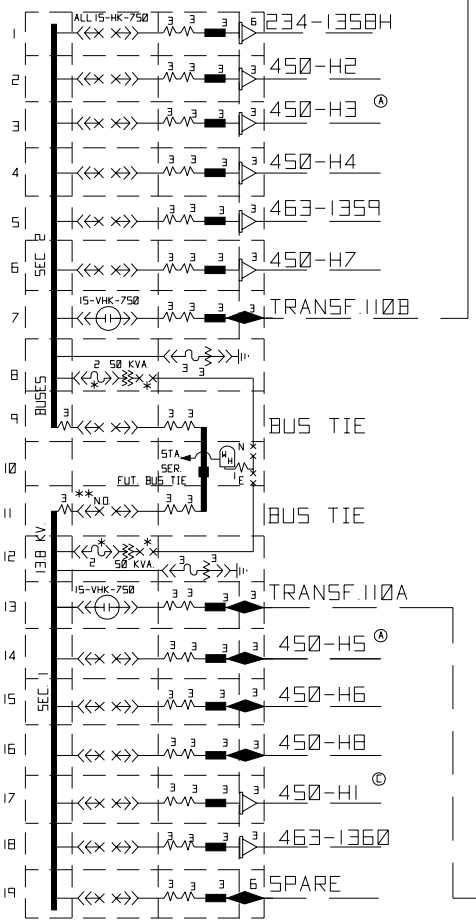

AUTO LOAD DISCONNECTION

ON LOSS OF EITHER TRANSFORMER
& IF LOAD EXCEEDS 1900 AMPS,
450-H7 WILL TRIP IN 30 MINUTES,
450-H5 WILL TRIP 15 MINUTES
LATER, & 450-H2 WILL TRIP IN AN
ADDITIONAL 15 MINUTES.

NOTES

15-HK-750=I.T.E. TYPE AIR CIRCUIT BREAKERS.
* KEY INTERLOCKED-THE AIR CIR. BRKR. ON THE SEC. SIDE OF THE STA. SER. TRANSF. MUST BE OPEN TO RELEASE THE KEY TO WITHDRAW THE PRI. FUSES FROM OPERATING POSITION.
1-130 VOLT CONTROL BATTERY WITH CHARGER.
1-48 VOLT SUPERVISORY CONTROL BATTERY WITH CHARGER.
SUPERVISORY CONTROL AND TELEMETERING VIA SCADA.
BOTH RADIO CONTROLLED LOAD RELIEF AND VOLTAGE REDUCTION AVAILABLE AT THIS STATION.
** NORMALLY OPEN-CLOSES AUTOMATICALLY ON LOSS OF POTENTIAL & LOAD ON EITHER BUS SECTION #1 OR #2 BY RELAY OPERATION ONLY
15-VHK-750 = ABB TYPE VACUUM CIRCUIT BREAKERS
C5772 DOES NOT HAVE A VISIBLE DISCONNECT SWITCH.

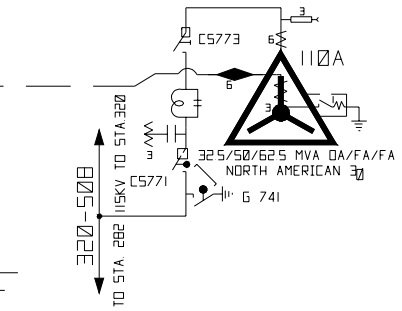

NSTAR ELECTRIC
AN NSTAR COMPANY

450

DATE	DESCRIPTION	BY	CHCK
7/3/01	UPDATED DRAWING	EBA	
12/18/00	UPDATED DRAWING	WJB	DEF

_STA_DIA\Sta450dwg, 05/31/02 at 09:42

450-H5 to 320-H2 load transfer. No problem during load transfer.

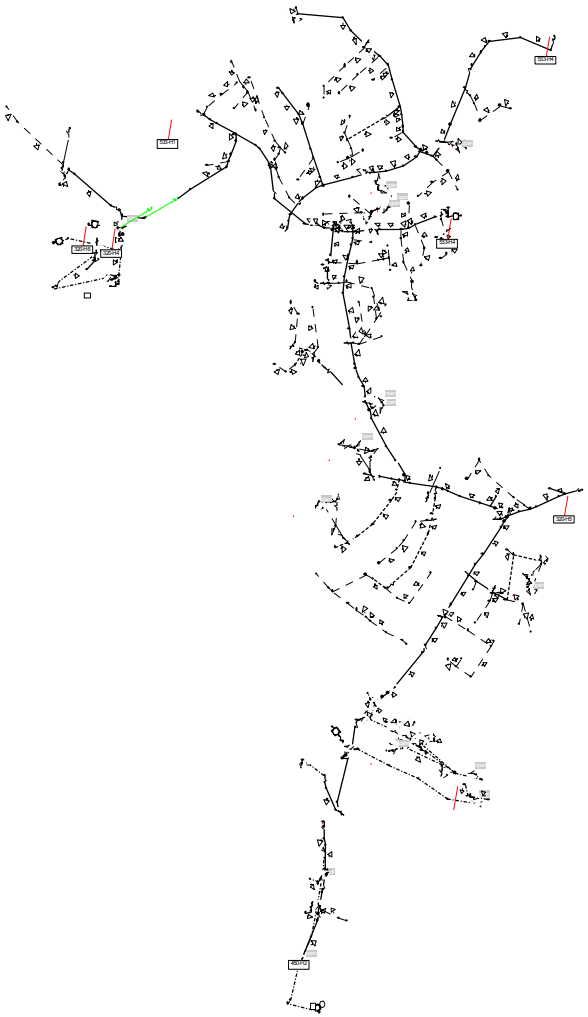

Voltage Drop Summary

Feeder	**320-H2**
Substation	STA320
Source Voltage	14.28 kVLL, 0.00 Deg.

Parameters

Analysis Type	Unbalanced Voltage Drop
Flag Levels	Summer, Emergency
Load Model	Nominal
Load Factor	1.00 x (kW) 1.00 x (kVAR)

Load Summary

	Total Load			
	kW	kVAR	kVA	PF(%)
Total load read (Non-adjusted)	10972.5	2675.36	11293.95	97.15
Total load used (Adjusted)	10971.2	2672.94	11292.12	97.16
Total shunt capacitor (Adjusted)		0		
Total shunt reactor (Adjusted)		0		
Total load from motor	0	0	0	0
Total power from generator	0	0	0	0
Total power to other feeder(s) (Loop)	0	0	0	0
Total conductor capacitances		195.99		
Total losses	304.06	587.99	661.95	45.93
Total power from substation	11275.26	3064.94	11684.4	96.5

Abnormal Conditions

	Phase	Count	Worst Condition	%
	A	0	1100502-255	83.49
Overload	B	0	1100502-281	84.66
	C	0	1100502-255	91.59
	A	0	1100502-532	99.42
Low Voltage	B	0	1100502-539	99.7
	C	0	1100837-21	96.59
	A	0	1100502-290	103.48
High Voltage	B	0	1100502-290	103.48
	C	0	1100502-290	103.48

Voltage Drop Summary

Feeder	**450-H5**
Substation	STA450
Source Voltage	14.28 kVLL, 0.00 Deg.

Parameters

Analysis Type	Unbalanced Voltage Drop
Flag Levels	Summer, Emergency
Load Model	Nominal
Load Factor	1.00 x (kW) 1.00 x (kVAR)

Load Summary

	Total Load			
	kW	kVAR	kVA	PF(%)
Total load read (Non-adjusted)	2212.12	547.42	2278.85	97.07
Total load used (Adjusted)	2211.73	547.33	2278.45	97.07
Total shunt capacitor (Adjusted)		0		
Total shunt reactor (Adjusted)		0		
Total load from motor	0	0	0	0
Total power from generator	0	0	0	0
Total power to other feeder(s) (Loop)	0	0	0	0
Total conductor capacitances		65.28		
Total losses	3.07	30.02	30.18	10.16
Total power from substation	2214.8	512.07	2273.23	97.43

Abnormal Conditions

	Phase	Count	Worst Condition	%
	A	0	1100837-52	24.45
Overload	B	0	1100837-52	24.47
	C	0	1100837-52	24.38
	A	0	1100837-66	102.94
Low Voltage	B	0	1100837-62	102.86
	C	0	1100837-52	103.28
	A	0	1100837-71	103.48
High Voltage	B	0	1100837-71	103.48
	C	0	1100837-71	103.48

450-H1 to 282-H7 load transfer. No problems during transfer.

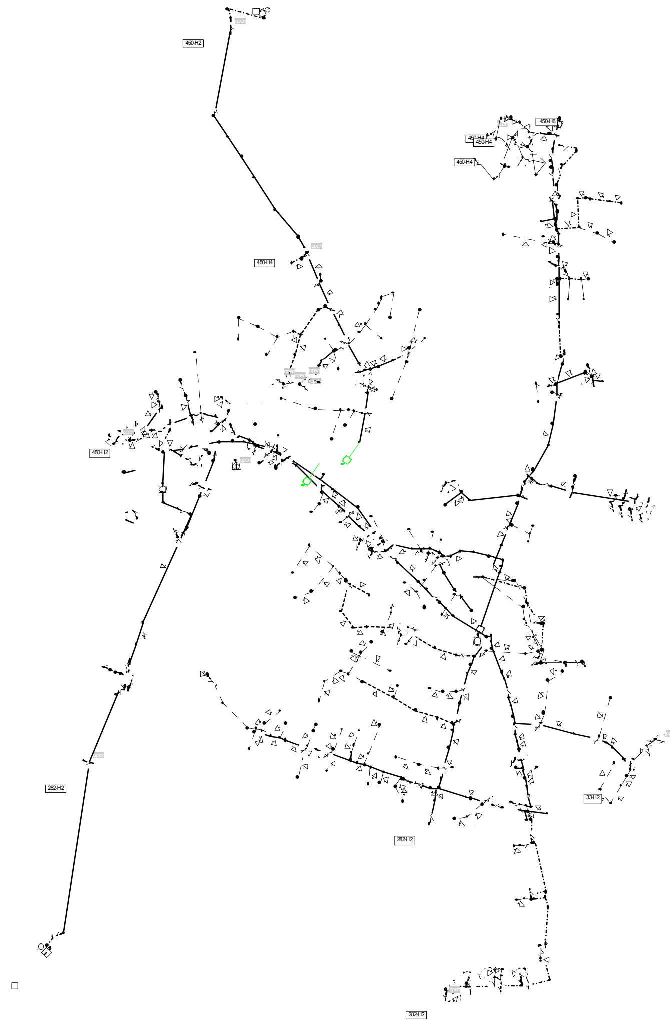

Voltage Drop Summary

Feeder	**282-H7**
Substation	STA282
Source Voltage	14.28 kVLL, 0.00 Deg.

Parameters

Analysis Type	Unbalanced Voltage Drop
Flag Levels	Summer, Emergency
Load Model	Nominal
Load Factor	1.00 x (kW) 1.00 x (kVAR)

Load Summary

	Total Load			
	kW	kVAR	kVA	PF(%)
Total load read (Non-adjusted)	11785.39	10841.07	16013.25	73.6
Total load used (Adjusted)	11785.44	10841.11	16013.32	73.6
Total shunt capacitor (Adjusted)		7924.11		
Total shunt reactor (Adjusted)		0		
Total load from motor	0	0	0	0
Total power from generator	0	0	0	0
Total power to other feeder(s) (Loop)	0	0	0	0
Total conductor capacitances		149.51		
Total losses	459.48	738.04	869.38	52.85
Total power from substation	12244.92	3505.52	12736.83	96.14

Abnormal Conditions

	Phase	Count	Worst Condition	%
	A	0	1100358-108	85.94
Overload	B	0	1100358-108	84.95
	C	0	1100358-108	91.92
	A	0	1100358-200	95.72
Low Voltage	B	0	1100358-244	95.73
	C	0	1100358-181	95.1
	A	0	1100358-325	103.48
High Voltage	B	0	1100358-325	103.48
	C	0	1100358-325	103.48

Voltage Drop Summary

Feeder	**450-H1**
Substation	STA450
Source Voltage	14.28 kVLL, 0.00 Deg.

Parameters

Analysis Type	Unbalanced Voltage Drop
Flag Levels	Summer, Emergency
Load Model	Nominal
Load Factor	1.00 x (kW) 1.00 x (kVAR)

Load Summary

	Total Load			
	kW	kVAR	kVA	PF(%)
Total load read (Non-adjusted)	444.86	359.45	571.93	77.78
Total load used (Adjusted)	444.86	359.44	571.93	77.78
Total shunt capacitor (Adjusted)		0		
Total shunt reactor (Adjusted)		0		
Total load from motor	0	0	0	0
Total power from generator	0	0	0	0
Total power to other feeder(s) (Loop)	0	0	0	0
Total conductor capacitances		22.61		
Total losses	2.12	2.6	3.36	63.24
Total power from substation	446.98	339.43	561.26	79.64

Abnormal Conditions

	Phase	Count	Worst Condition	%
	A	0	1100833-130	19.29
Overload	B	0	1100833-130	21.01
	C	0	1100833-130	22.77
	A	0	1100833-131	100.5
Low Voltage	B	0	1100833-131	100.16
	C	0	1100833-131	100.31
	A	0	1100833-3	103.5
High Voltage	B	0	1100833-2	103.48
	C	0	1100833-2	103.48

450-H7 to 282-H1 load transfer. 450-H7 has an overloaded step-down transformer, which is a preexisting condition.

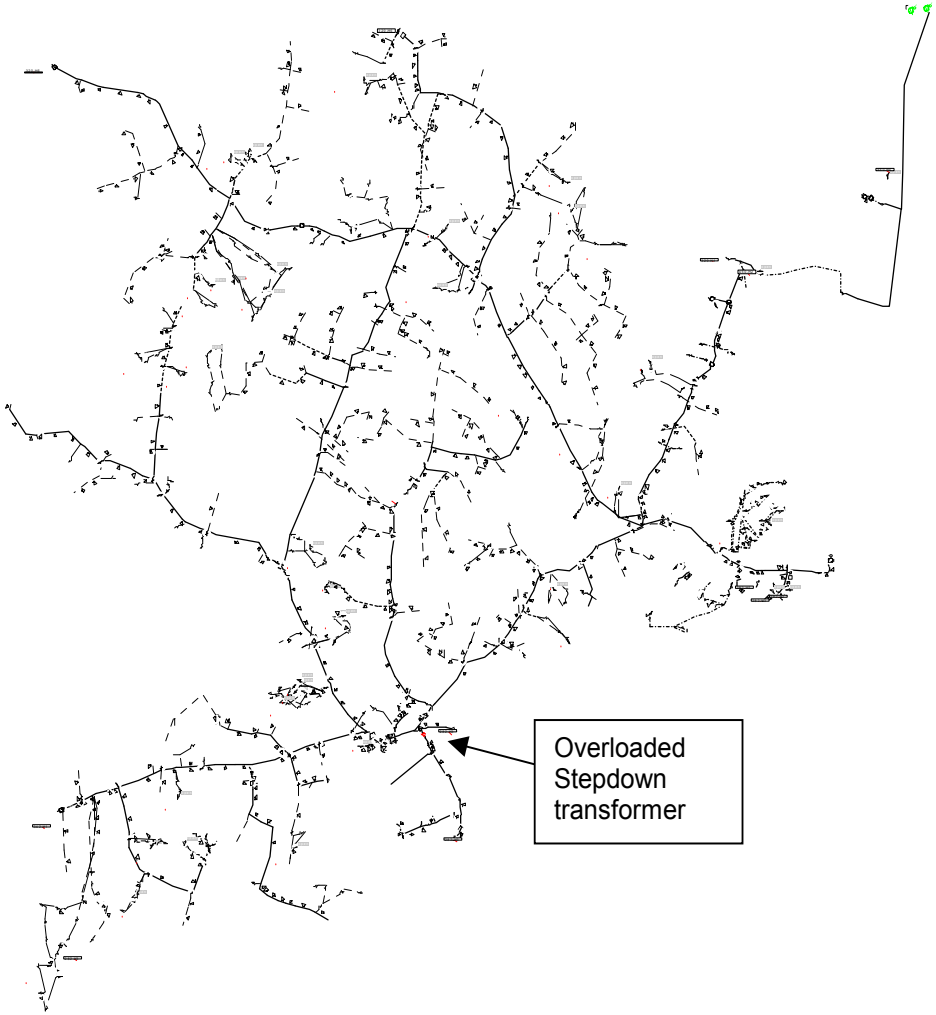

Voltage Drop Summary

Feeder	**282-H1**
Substation	STA282
Source Voltage	14.28 kVLL, 0.00 Deg.

Parameters

Analysis Type	Unbalanced Voltage Drop
Flag Levels	Summer, Emergency
Load Model	Nominal
Load Factor	1.00 x (kW) 1.00 x (kVAR)

Load Summary

	Total Load			
	kW	kVAR	kVA	PF(%)
Total load read (Non-adjusted)	9252.88	6301.17	11194.67	82.65
Total load used (Adjusted)	9252.9	6301.19	11194.7	82.65
Total shunt capacitor (Adjusted)		4200.35		
Total shunt reactor (Adjusted)		0		
Total load from motor	0	0	0	0
Total power from generator	0	0	0	0
Total power to other feeder(s) (Loop)	0	0	0	0
Total conductor capacitances		416.48		
Total losses	121.6	198.14	232.48	52.31
Total power from substation	9374.51	1882.49	9561.65	98.04

Abnormal Conditions

	Phase	Count	Worst Condition	%
	A	0	1100353-1202	52.64
Overload	B	0	1100353-1202	78.96
	C	0	1100353-1202	65.87
	A	0	1100353-766	100.59
Low Voltage	B	0	1100839-767	95.49
	C	0	1100839-775	99.5
	A	0	1100839-767	104.98
High Voltage	B	0	1100353-1147	103.48
	C	0	1100353-455	103.7

Voltage Drop Summary

Feeder	**450-H7**
Substation	STA450
Source Voltage	14.28 kVLL, 0.00 Deg.

Parameters

Analysis Type	Unbalanced Voltage Drop
Flag Levels	Summer, Emergency
Load Model	Nominal
Load Factor	1.00 x (kW) 1.00 x (kVAR)

Load Summary

	Total Load			
	kW	kVAR	kVA	PF(%)
Total load read (Non-adjusted)	8842.11	6789.25	11147.95	79.32
Total load used (Adjusted)	8842.2	6789.33	11148.07	79.32
Total shunt capacitor (Adjusted)		5434.67		
Total shunt reactor (Adjusted)		0		
Total load from motor	0	0	0	0
Total power from generator	0	0	0	0
Total power to other feeder(s) (Loop)	0	0	0	0
Total conductor capacitances		130.77		
Total losses	230.15	484.26	536.17	42.93
Total power from substation	9072.35	1708.14	9231.75	98.27

Abnormal Conditions

	Phase	Count	Worst Condition	%
	A	1	1100839-477	134
Overload	B	1	1100839-477	160.21
	C	1	1100839-477	134.04
	A	0	1100839-657	97.2
Low Voltage	B	0	1100839-644	98.44
	C	0	1100839-98	100.32
	A	0	1100839-1	103.48
High Voltage	B	0	1100839-1	103.48
	C	0	1100839-1	103.48

Feeder Id	Section Id	Equipment Id	Phase	VA	VB	VC	VA (kVLN)	VB (kVLN)	VC (kVLN)	IA (Amps)	IB (Amps)	IC (Amps)	Loading A (%)	Loading B (%)	Loading C (%)	Thru Power A (kW)	Thru Power B (kW)	Thru Power C (kW)	Thru Power A (kVAR)	Thru Power B (kVAR)	Thru Power C (kVAR)
450-H7	1100839-477	SDX167_13.8_4	ABC	119.7	120.2	122.9	2.4	2.4	2.5	44.5	53	43.4	134	160.2	134	155.5	199.7	143.8	313.4	374	317.9

450-H2 to 282-H2 load transfer. No problems during transfer.

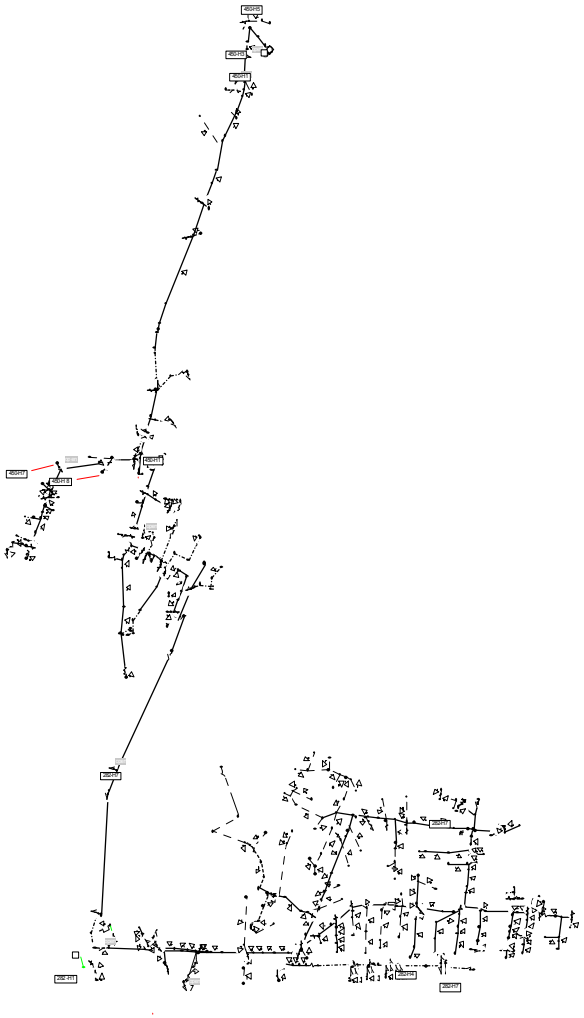

Voltage Drop Summary

Feeder	**282-H2**
Substation	STA282
Source Voltage	14.28 kVLL, 0.00 Deg.

Parameters

Analysis Type	Unbalanced Voltage Drop
Flag Levels	Summer, Emergency
Load Model	Nominal
Load Factor	1.00 x (kW) 1.00 x (kVAR)

Load Summary

	Total Load			
	kW	kVAR	kVA	PF(%)
Total load read (Non-adjusted)	14411.01	6254.13	15709.6	91.73
Total load used (Adjusted)	14411.12	6254.4	15709.8	91.73
Total shunt capacitor (Adjusted)		2809.28		
Total shunt reactor (Adjusted)		0		
Total load from motor	0	0	0	0
Total power from generator	0	0	0	0
Total power to other feeder(s) (Loop)	0	0	0	0
Total conductor capacitances		101.43		
Total losses	150.51	239.83	283.14	53.16
Total power from substation	14561.63	3583.51	14996.09	97.1

Abnormal Conditions

	Phase	Count	Worst Condition	%
	A	0	1100354-232	99.97
Overload	B	0	1100354-318	84.65
	C	0	1100354-232	87.14
	A	0	1100354-316	98.11
Low Voltage	B	0	1100354-106	98.94
	C	0	1100354-381	98.93
	A	0	1100354-334	103.48
High Voltage	B	0	1100354-334	103.48
	C	0	1100354-334	103.48

Voltage Drop Summary

Feeder	**450-H2**
Substation	STA450
Source Voltage	14.28 kVLL, 0.00 Deg.

Parameters

Analysis Type	Unbalanced Voltage Drop
Flag Levels	Summer, Emergency
Load Model	Nominal
Load Factor	1.00 x (kW) 1.00 x (kVAR)

Load Summary

	Total Load			
	kW	kVAR	kVA	PF(%)
Total load read (Non-adjusted)	5920.15	1950.89	6233.31	94.98
Total load used (Adjusted)	5917	1950.21	6230.1	94.97
Total shunt capacitor (Adjusted)		1407.84		
Total shunt reactor (Adjusted)		0		
Total load from motor	0	0	0	0
Total power from generator	0	0	0	0
Total power to other feeder(s) (Loop)	0	0	0	0
Total conductor capacitances		32.71		
Total losses	59.86	96.71	113.74	52.63
Total power from substation	5976.86	606.36	6007.54	99.49

Abnormal Conditions

	Phase	Count	Worst Condition	%
	A	0	1100834-15	51.81
Overload	B	0	1100834-15	51.38
	C	0	1100834-15	51.72
	A	0	1100834-193	102.01
Low Voltage	B	0	1100834-193	102.03
	C	0	1100834-193	102.05
	A	0	1100834-15	103.48
High Voltage	B	0	1100834-15	103.48
	C	0	1100834-15	103.48

450-H3 to 320-H1 load transfer. Voltage problems occurred during load transfer, three 1350 kVAR capacitor banks have been installed on sections 1100501-114, -239 and –410. Normal voltage is maintained during the load transfer with the installation of the capacitor banks.

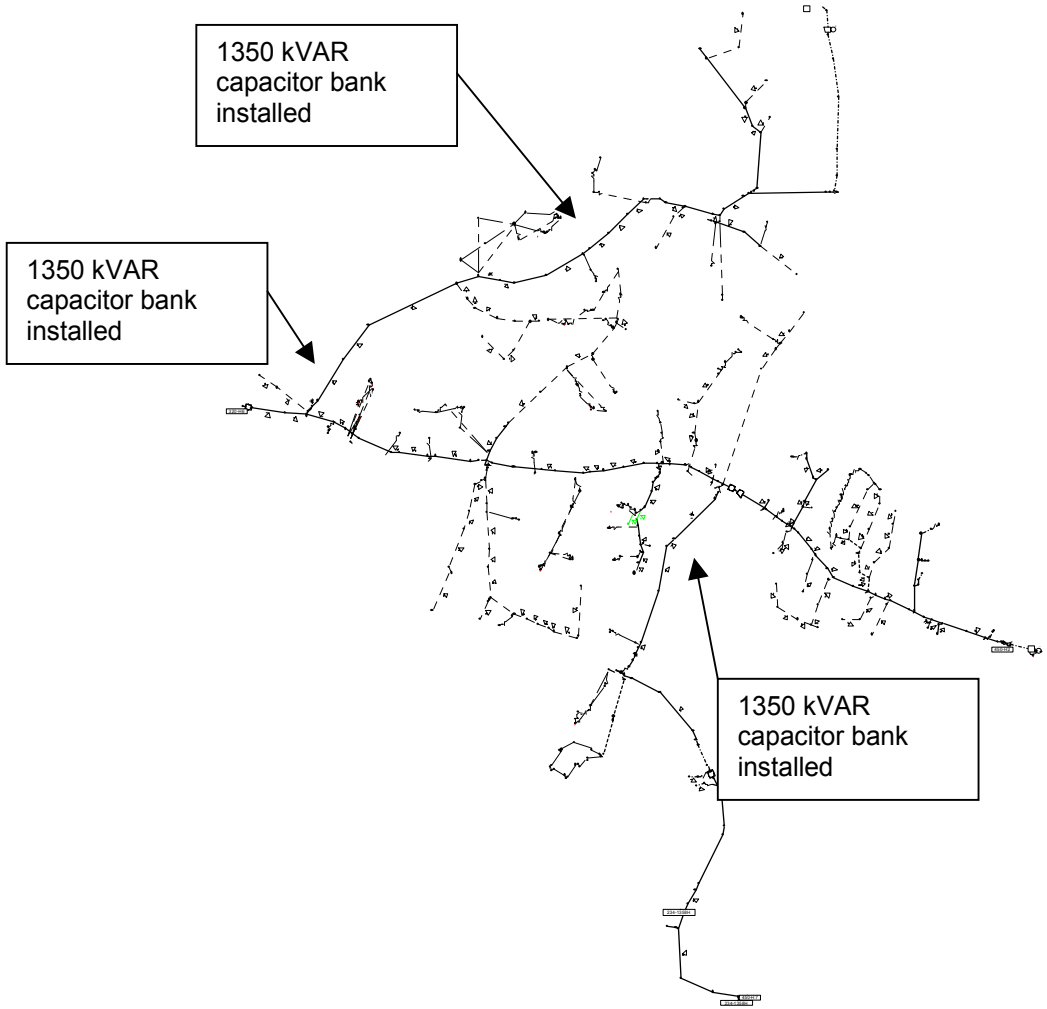

Voltage Drop Summary

Feeder	**320-H1**
Substation	STA320
Source Voltage	14.28 kVLL, 0.00 Deg.

Parameters

Analysis Type	Unbalanced Voltage Drop
Flag Levels	Summer, Emergency
Load Model	Nominal
Load Factor	1.00 x (kW) 1.00 x (kVAR)

Load Summary

	Total Load			
	kW	kVAR	kVA	PF(%)
Total load read (Non-adjusted)	9581.66	3894.4	10342.85	92.64
Total load used (Adjusted)	9581.67	3892.41	10342.11	92.65
Total shunt capacitor (Adjusted)		5408.02		
Total shunt reactor (Adjusted)		0		
Total load from motor	0	0	0	0
Total power from generator	0	0	0	0
Total power to other feeder(s) (Loop)	0	0	0	0
Total conductor capacitances		201.92		
Total losses	560.91	1210.16	1333.83	42.05
Total power from substation	10142.58	-507.38	10155.27	-99.88

Abnormal Conditions

	Phase	Count	Worst Condition	%
	A	0	1100501-468	76.03
Overload	B	0	1100501-468	78.18
	C	0	1100501-468	73.74
	A	0	1100501-468	98.65
Low Voltage	B	0	1100501-437	96.65
	C	0	1100501-430	96.25
	A	0	1100501-19	103.5
High Voltage	B	0	1100501-1	103.48
	C	0	1100501-1	103.48

Voltage Drop Summary

Feeder	**450-H3**
Substation	STA450
Source Voltage	14.28 kVLL, 0.00 Deg.

Parameters

Analysis Type	Unbalanced Voltage Drop
Flag Levels	Summer, Emergency
Load Model	Nominal
Load Factor	1.00 x (kW) 1.00 x (kVAR)

Load Summary

	Total Load			
	kW	kVAR	kVA	PF(%)
Total load read (Non-adjusted)	0	0	0	0
Total load used (Adjusted)	0	0	0	0
Total shunt capacitor (Adjusted)		0		
Total shunt reactor (Adjusted)		0		
Total load from motor	0	0	0	0
Total power from generator	0	0	0	0
Total power to other feeder(s) (Loop)	0	0	0	0
Total conductor capacitances		4.69		
Total losses	0	0	0	0
Total power from substation	0	-4.69	4.69	0

Abnormal Conditions

	Phase	Count	Worst Condition	%
	A	0	1100835-156	0.03
Overload	B	0	1100835-156	0.03
	C	0	1100835-156	0.03
	A	0	1100835-156	103.48
Low Voltage	B	0	1100835-156	103.48
	C	0	1100835-156	103.48
	A	0	1100835-158	103.48
High Voltage	B	0	1100835-158	103.48
	C	0	1100835-158	103.48

2003 T&D OPERATING STUDY
WALTHAM DISTRICT

STATION #467 WATERTOWN

Transformer #110A: Westinghouse 75/100/125 [140] MVA 115/13.8/13.8 kV
Transformer #110B: Westinghouse 75/100/125 [140] MVA 115/13.8/13.8 kV

Overload Ratings:

Transformer	Nameplate	Ambient	12 hour LTE, 110F Ambient
110A	75/100/125 [140] MVA	167 MVA	156 MVA
110B	75/100/125 [140] MVA	167 MVA	156 MVA

Station Capabilities:

Total Station Capacity (N)	Station Firm Capacity (LTE)	RADSEC Transfer	Manual Transfer	Total LCC
250 MVA	144 MVA	0 MVA	0 MVA	144 MVA

Switching Actions:

Loss of Transformer #110A:

Open: Circuit Switcher #CS771
Both Main 110A 13.8kV Circuit Breakers
Close: ABR scheme closes 13.8kV Bus Ties Automatically

Loss of Transformer #110B:

Open: Circuit Switcher #CS771
Both Main 110B 13.8kV Circuit Breakers
Close: ABR scheme closes 13.8kV Bus Ties Automatically

No 13.8kV Distribution Transfers at this station.

Results:

Loading: No heavy loading conditions were identified.

Voltage: No low voltage conditions were identified.

Additional Actions Required: None

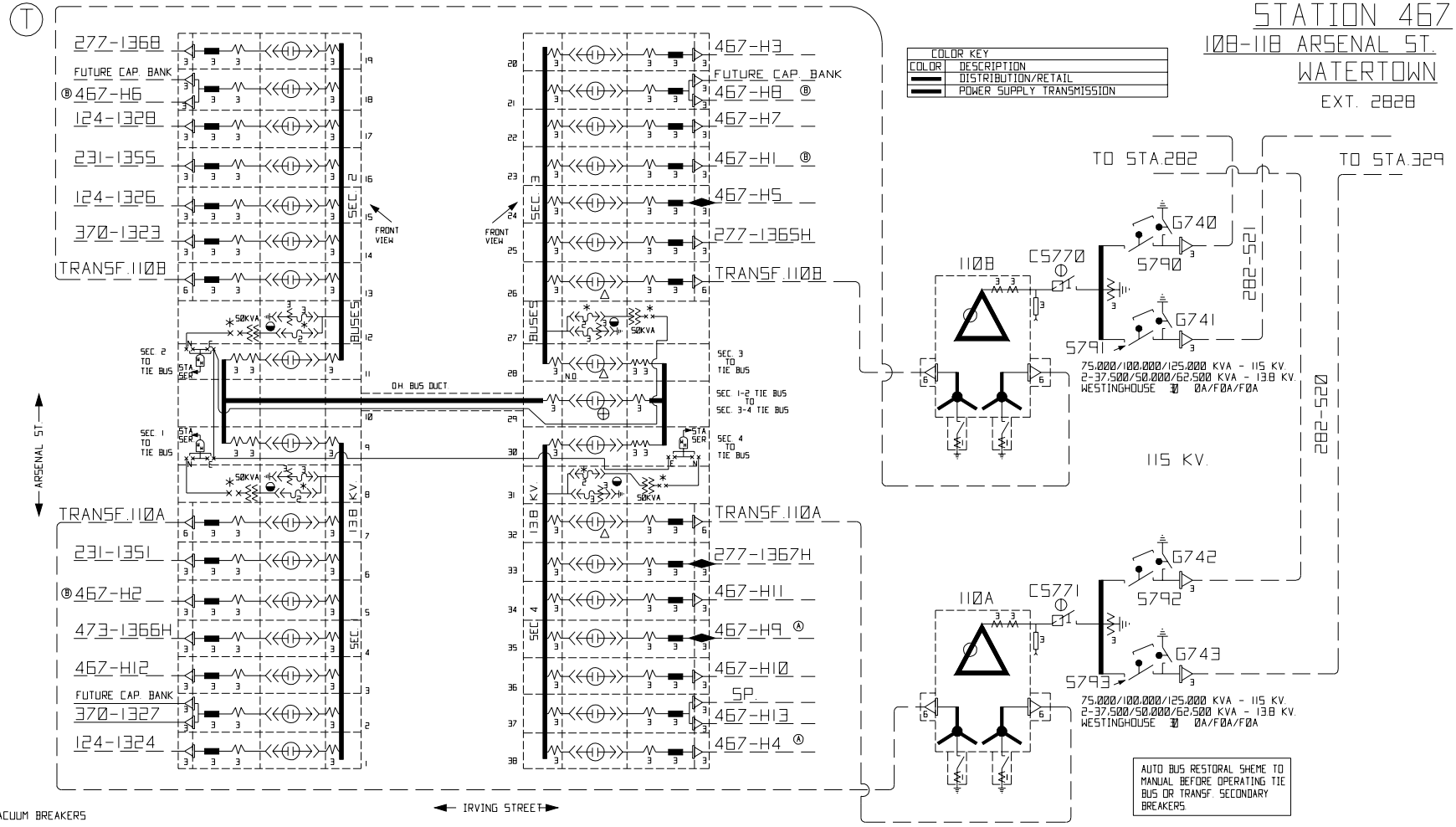

NOTES:

ALL ACB'S REPLACED WITH VACUUM BREAKERS

* KIRK INTERLOCKED-STA SERV SEC. BREAKER MUST BE OPENED TO PERMIT WITHDRAWAL OF PRIMARY FUSES FROM OPERATING POSITION.

⦶ CIRCUIT SWITCHERS EQUIPED WITH SHUNT TRIP DEVICE. SUPERVISORY CONTROL & TELEMETERING SYSTEM TO STATION 329. 1-130V CONTROL BATTERY WITH CHARGER 1-48V SUPERVISORY CONTROL EQUIPMENT BATTERY WITH CHARGER.

⊕ ELECTRICAL INTERLOCK-AT LEAST TWO (2) 115 KV. TRANSFORMER SECONDARY BREAKERS MUST BE OPENED TO CLOSE SEC. 1-2 TIE BUS TO SEC. 3-4 TIE BUS BREAKER.

NOTES:

BOTH RADIO CONTROLLED LOAD RELIEF AND VOLTAGE REDUCTION AVAILABLE AT THIS STATION.

◒ NON-STANDARD BUS POTENTIAL TRANSFORMERS RATIO 121:121

△ AUTOMATIC BUS RESTORAL SCHEME-UPON LOSS OF BUS POTENTIAL & TRANSFORMER LOAD ON EITHER SECTION 3 OR 4, THAT SECTION'S TRANSFORMER BREAKER WILL OPEN & SECTION 3 TO TIE BUS BREAKER WILL CLOSE.

NSTAR ELECTRIC
AN NSTAR COMPANY

467

DATE	DESCRIPTION	BY	CHCK
8/7/02	CHANGED LINE 285-1323 TO 370-1323 AND 285-1327 TO 370-1327	WJB	RBB
5/30/02	UPDATED PER ENGINEER'S NOTES	EBA	DF

_STA_DIA\STA467.DWG. 05/30/02 at 12:29

2003 T&D OPERATING STUDY
WALTHAM DISTRICT

STATION #533 HARTWELL AVE. (NO. LEXINGTON)

Transformer #110A: McGraw-Edison 75/100/125 [140] MVA 115/14.4/14.4 kV
Transformer #110B: McGraw-Edison 75/100/125 [140] MVA 115/14.4/14.4 kV

Overload Ratings:

Transformer	Nameplate	12 hour LTE, 90F Ambient	12 hour LTE, 110F Ambient
110A	75/100/125 [140] MVA	180 MVA	168 MVA
110B	75/100/125 [140] MVA	180 MVA	168 MVA

Station Capabilities:

Total Station Capacity (N)	Station Firm Capacity (LTE)	RADSEC Transfer	Manual Transfer	Total LCC
250 MVA	151 MVA	8 MVA	0 MVA	159 MVA

Switching Actions:

Loss of Transformer #110A:

Open: Circuit Switcher #CS771
Both Main 110A 13.8kV Circuit Breakers
Close: ABR scheme closes 13.8kV Bus Ties Automatically

Loss of Transformer #110B:

Open: Circuit Switcher #CS770
Both Main 110B 13.8kV Circuit Breakers
Close: ABR scheme closes 13.8kV Bus Ties Automatically

Results:

Loading: No heavy loading conditions were identified.

Voltage: No low voltage conditions were identified.

Additional Actions Required: None

STATION 533

HARTWELL AVE.
LEXINGTON

TEL-932-7149

"T"

M-COLOR

COLOR KEY	
COLOR	DESCRIPTION
	DISTRIBUTION/RETAIL
	POWER SUPPLY TRANSMISSION

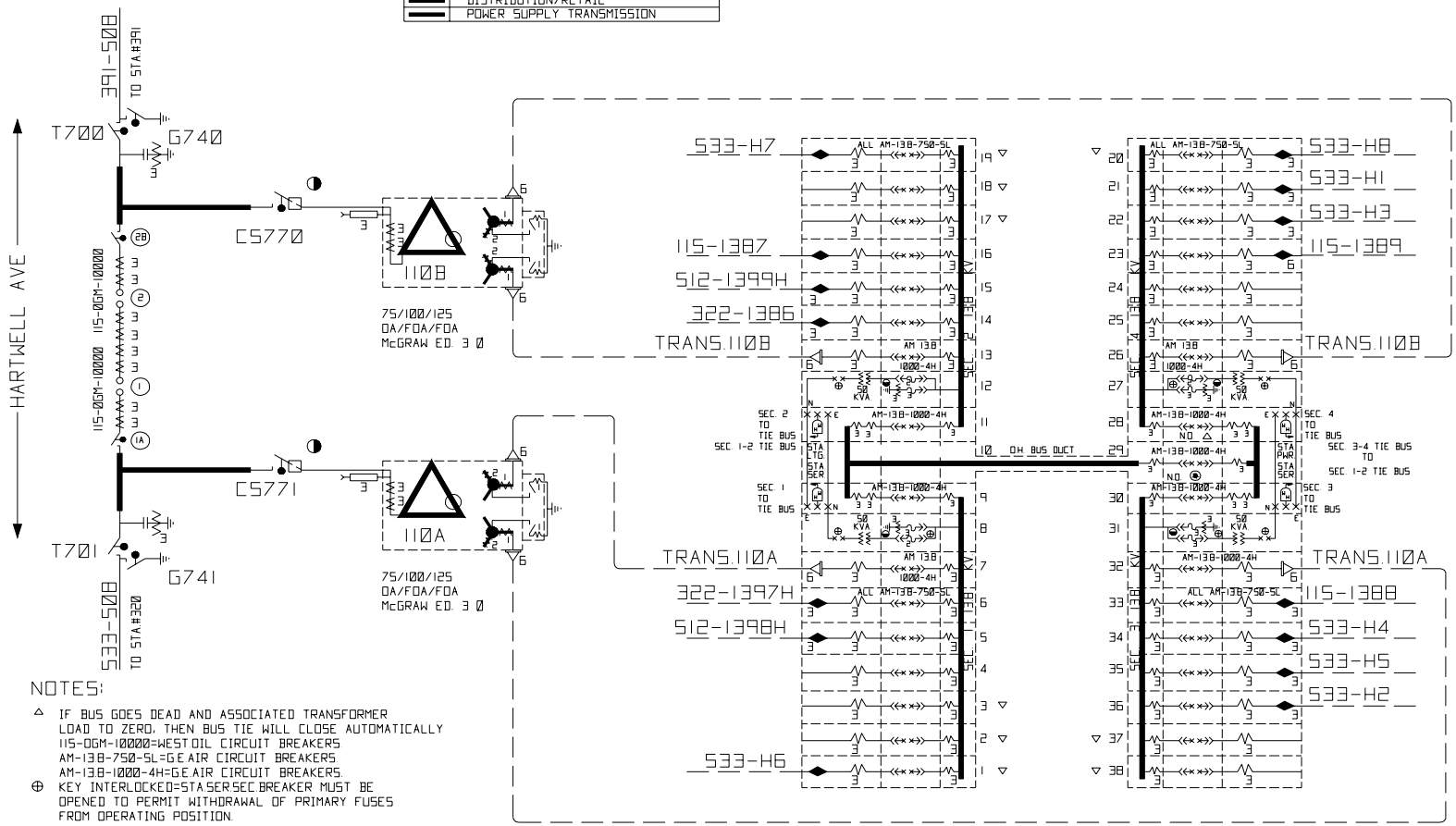

NOTES:

△ IF BUS GOES DEAD AND ASSOCIATED TRANSFORMER LOAD TO ZERO, THEN BUS TIE WILL CLOSE AUTOMATICALLY
115-OGM-10000=WEST OIL CIRCUIT BREAKERS
AM-138-750-SL=G.E.AIR CIRCUIT BREAKERS.
AM-138-1000-4H=G.E.AIR CIRCUIT BREAKERS.

⊕ KEY INTERLOCKED=STA.SER.SEC.BREAKER MUST BE OPENED TO PERMIT WITHDRAWAL OF PRIMARY FUSES FROM OPERATING POSITION.
1-130V.BATTERY W/CHARGER.
RADIO CONTROLLED VOLTAGE REDUCTION & LOAD RELIEF AVAILABLE AT THIS STATION.

◑ CIRCUIT & SWITCHER EQUIPPED W/SHUNT TRIP DEVICE.

◒ NON-STANDARD BUS POTENTIAL TRANSFORMERS,RATIO 121.21:1 CURRIER SMITH ALARMING.

▽ CUBICLE EQUIPPED WITH RECLOSING RELAYS AND LOAD SHEDDING EQUIPMENT.

◉ ELECTRICAL INTERLOCK-BREAKER CANNOT BE CLOSED UNLESS ANY TWO TRANSF.BREAKERS ARE OPEN
SCADA SUPERVISORY & CONTROL

BOSTON EDISON CO.
E.E. & S.O.D. DESIGN SERVICES

533

DATE JULY 29,1996

Walpole District

Bulk Substation Transformer Outages

Distribution Supply Line Outages

Thermal Results and Remedial Switching Actions

2003 T&D OPERATING STUDY
WALPOLE DISTRICT

STATION #65 MEDWAY

Transformer #110A: North American 24/32/40 MVA 117/14.4 kV
Transformer #110B: North American 24/32/40 MVA 117/14.4 kV

Overload Ratings:

Transformer	Nameplate	12 hour LTE, 90F Ambient	12 hour LTE, 110F Ambient
110A	24/32/40 MVA	48 MVA	44 MVA
110B	24/32/40 MVA	48 MVA	44 MVA

Station Capabilities:

Total Station Capacity (N)	Station Firm Capacity (LTE)	RADSEC Transfer	Manual Transfer	
80 MVA	40 MVA	5.8 MVA	0 MVA	45.8 MVA

Switching Actions:

Loss of Transformer #110A:

Open: Circuit Breakers #2 and #3 in Medway 115kV ring bus
Main 110A 13.8kV Circuit Breaker
Disconnect Switch #T730
Close: ABR scheme closes 13.8V bus tie breaker automatically
Circuit Breakers #2 and #3 to restore Medway ring bus

Loss of Transformer #110B:

Open: Circuit Breakers #1, #4, and #7 in Medway 115kV ring bus
Main 110B 13.8kV Circuit Breaker
Disconnect Switch #T731
Close: ABR scheme closes 13.8V bus tie breaker automatically
Circuit Breakers #1, #4, and #7 to restore Medway ring bus

For loss of either transformer, transfer of the following DSS lines via RADSEC switches would also be required:

Medway 65-H2 to Hopkinton 126-H2 via RADSEC MRU 459 for a transfer of 3.1 MVA
Medway 65-H6 to Hopkinton 126-H3 via RADSEC MRU 457 for a transfer of 2.7 MVA

Total Transfer: 5.8 MVA

Results:

Loading - For the load transfer of 65-H6 to 126-H3, there may be heavy loading conditions on sections of the #2 AL cable of circuit 126-H3 that may require an upgrade/reconductoring of the conductor.

For the load transfer of 65-H2 to 126-H2, there may be heavy loading conditions on a 500 kcmil cable section of circuit 126-H2, but is within applicable emergency ratings.

Voltage - No low voltage conditions were identified.

Additional Actions Required:

Install RADSEC controlled switches to increase the Medway transfer switching by 8 MVA.

STATION 65

MEDWAY RING

WEST ST. NEAR VILLAGE ST.

WEST MEDWAY

TEL# (508)370-4862

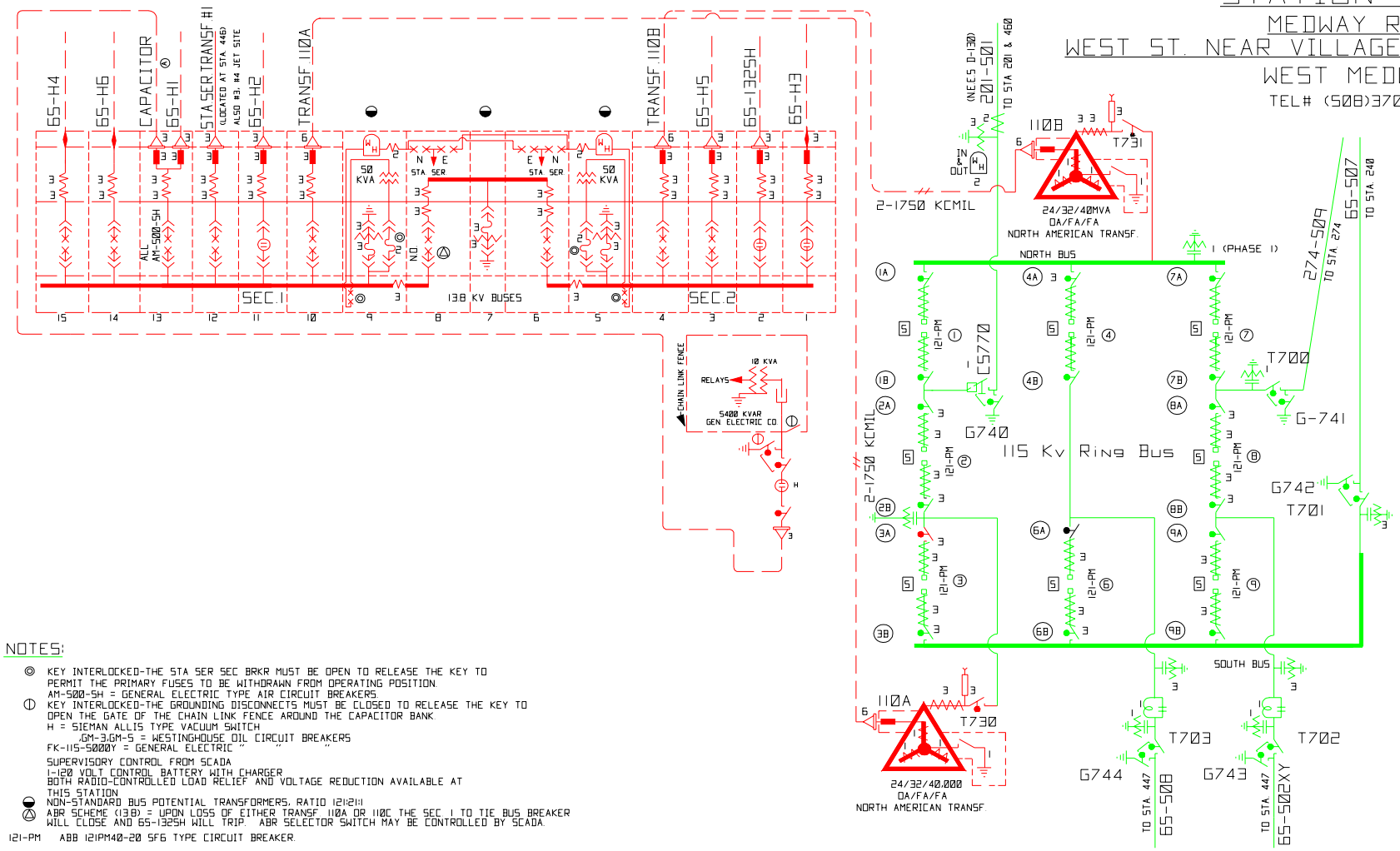

NOTES:

- ◎ KEY INTERLOCKED-THE STA SER SEC BRKR MUST BE OPEN TO RELEASE THE KEY TO PERMIT THE PRIMARY FUSES TO BE WITHDRAWN FROM OPERATING POSITION. AM-500-5H = GENERAL ELECTRIC TYPE AIR CIRCUIT BREAKERS.
- ⦶ KEY INTERLOCKED-THE GROUNDING DISCONNECTS MUST BE CLOSED TO RELEASE THE KEY TO OPEN THE GATE OF THE CHAIN LINK FENCE AROUND THE CAPACITOR BANK.
- H = SIEMAN ALLIS TYPE VACUUM SWITCH
- ,GM-3,GM-5 = WESTINGHOUSE OIL CIRCUIT BREAKERS
- FK-115-5000Y = GENERAL ELECTRIC " " "
- SUPERVISORY CONTROL FROM SCADA
- 1-120 VOLT CONTROL BATTERY WITH CHARGER
- BOTH RADIO-CONTROLLED LOAD RELIEF AND VOLTAGE REDUCTION AVAILABLE AT THIS STATION
- ◒ NON-STANDARD BUS POTENTIAL TRANSFORMERS, RATIO 121:21:1
- ⦶ ABR SCHEME (138) = UPON LOSS OF EITHER TRANSF 110A OR 110C THE SEC. 1 TO TIE BUS BREAKER WILL CLOSE AND 65-1325H WILL TRIP. ABR SELECTOR SWITCH MAY BE CONTROLLED BY SCADA.

121-PM ABB 121PM40-20 SF6 TYPE CIRCUIT BREAKER.

BOSTON EDISON COMPANY

DELIVERY ENGINEERING DEPARTMENT

ELECTRICAL DESIGN DRAFTING GROUP

65

DATE	DESCRIPTION	BY	CHCK
7/14/88	REVISED LINE NUMBER 9 CUB 7 AND CHANGED SECT. 11 BKR TO VACUUM	WJB	

FIELD\STA065, 03/05/96 at 1551

MEDWAY (65)

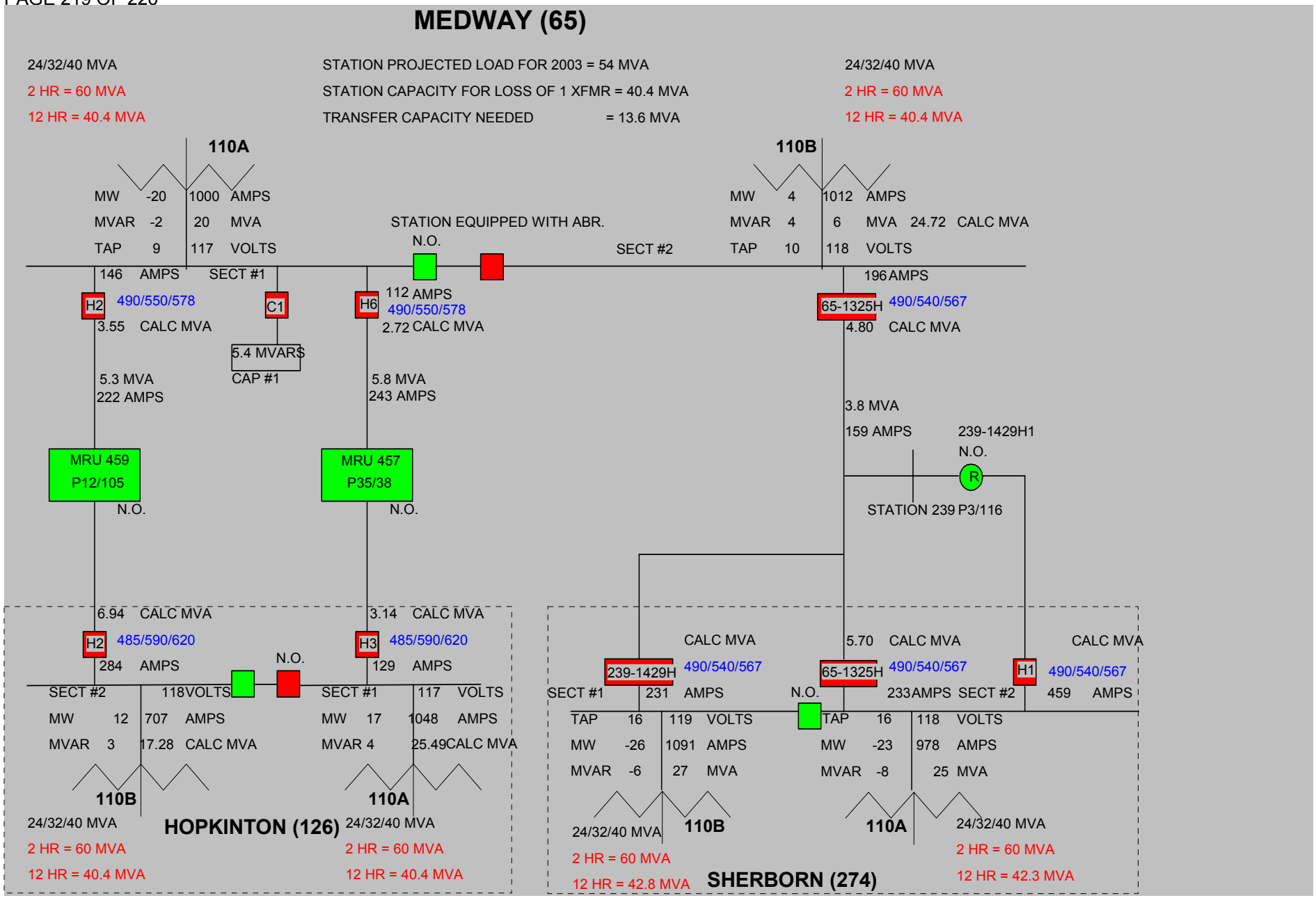
24/32/40 MVA
2 HR = 60 MVA
12 HR = 40.4 MVA
STATION PROJECTED LOAD FOR 2003 = 54 MVA
STATION CAPACITY FOR LOSS OF 1 XFMR = 40.4 MVA
TRANSFER CAPACITY NEEDED = 13.6 MVA
24/32/40 MVA
2 HR = 60 MVA
12 HR = 40.4 MVA
110A
MW -20 1000 AMPS
MVAR -2 20 MVA
TAP 9 117 VOLTS
146 AMPS SECT #1
STATION EQUIPPED WITH ABR.
N.O.
SECT #2
110B
MW 4 1012 AMPS
MVAR 4 6 MVA 24.72 CALC MVA
TAP 10 118 VOLTS
196 AMPS
H2 490/550/578
3.55 CALC MVA
C1
5.4 MVARS
CAP #1
H6 112 AMPS
490/550/578
2.72 CALC MVA
65-1325H 490/540/567
4.80 CALC MVA
5.3 MVA
222 AMPS
5.8 MVA
243 AMPS
3.8 MVA
159 AMPS
239-1429H1
N.O.
R
STATION 239 P3/116
MRU 459
P12/105
N.O.
MRU 457
P35/38
N.O.
6.94 CALC MVA
H2 485/590/620
284 AMPS
N.O.
3.14 CALC MVA
H3 485/590/620
129 AMPS
SECT #2 118 VOLTS
MW 12 707 AMPS
MVAR 3 17.28 CALC MVA
SECT #1 117 VOLTS
MW 17 1048 AMPS
MVAR 4 25.49 CALC MVA
110B
110A
24/32/40 MVA
2 HR = 60 MVA
12 HR = 40.4 MVA
HOPKINTON (126)
24/32/40 MVA
2 HR = 60 MVA
12 HR = 40.4 MVA
CALC MVA
239-1429H 490/540/567
SECT #1 231 AMPS
TAP 16 119 VOLTS
MW -26 1091 AMPS
MVAR -6 27 MVA
5.70 CALC MVA
65-1325H 490/540/567
N.O.
233 AMPS
TAP 16 118 VOLTS
MW -23 978 AMPS
MVAR -8 25 MVA
CALC MVA
H1 490/540/567
SECT #2 459 AMPS
24/32/40 MVA
2 HR = 60 MVA
12 HR = 42.8 MVA
110B
110A
24/32/40 MVA
2 HR = 60 MVA
12 HR = 42.3 MVA
SHERBORN (274)

2003 T&D OPERATING STUDY
WALPOLE DISTRICT

STATION #456 DOVER

Transformer #110A: Westinghouse 18/24 MVA 110/13.8 kV

Overload Ratings:

Transformer	Nameplate	12 hour LTE, 90F Ambient	12 hour LTE, 110F Ambient
110A	18/24 MVA	36 MVA	32 MVA

Station Capabilities:

Total Station Capacity (N)	Station Firm Capacity (LTE)	RADSEC Transfer	Manual Transfer	
24 MVA	0 MVA	24.3 MVA	0 MVA	24.3 MVA

Switching Actions:

Loss of Transformer #110A:

Open: Circuit Breaker #1 on 115kV bus
Main 110A 13.8kV Circuit Breaker
Close: Transfer 13.8kV circuits to adjacent stations as listed below:

Dover 456-H3 to Framingham 240-H5 via RADSEC MRU 962 and Needham 148-H3 via RADSEC MRU 884 for a total transfer of 9.1 MVA
Dover 456-H2 to Walpole 146-H6 via RADSEC MRU 387 for a transfer of 7.7 MVA
Dover 456-H1 to Walpole 146-H4 via RADSEC MRU 995 for a transfer of 7.5 MVA

Total Transfer: 24.3 MVA

Results:

Loading - The 456-H1 to 146-H4 load transfer may result in heavy loading conditions on the 500 kcmil cable getaway of the 146-H4 circuit, but is within applicable emergency rating.

The 456-H2 to 146-H6 load transfer may result in heavy loading conditions on the 500 kmcil cable getaway of the 146-H6 circuit, but is within applicable emergency rating.

Voltage	-	The 456-H3 to 146-H2 / 240-H5 load transfer may result in low voltage concerns on circuit 146-H2. The installation of SCADA-switched capacitor banks and a voltage regulator may be required for post-contingency voltage remediation.

Additional Actions Required:

Install connection capabilities for a mobile transformer deployment. Place a mobile 115/14kV transformer into service upon failure of the Dover Station #456 transformer.

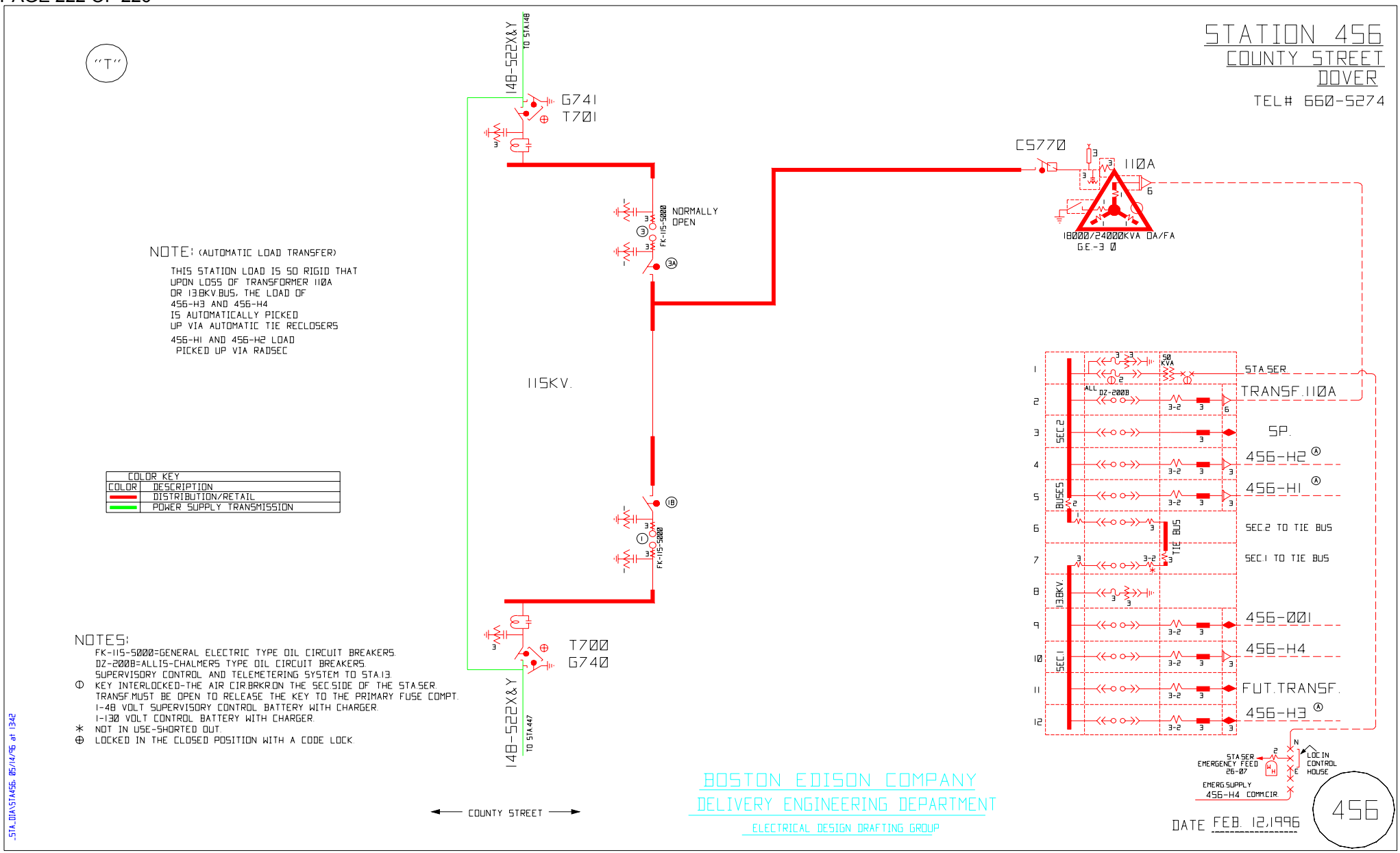
STATION 456
COUNTY STREET
DOVER
TEL# 660-5274
"T"
148-522X&Y
TO STA.148
G741
T701
NORMALLY OPEN
FK-115-5000
115KV.
T700
G740
148-522X&Y
TO STA.447
COUNTY STREET
CS770
110A
18000/24000KVA OA/FA
G.E.-3 Ø
NOTE: (AUTOMATIC LOAD TRANSFER)
THIS STATION LOAD IS SO RIGID THAT UPON LOSS OF TRANSFORMER 110A OR 13.8KV.BUS, THE LOAD OF 456-H3 AND 456-H4 IS AUTOMATICALLY PICKED UP VIA AUTOMATIC TIE RECLOSERS
456-H1 AND 456-H2 LOAD PICKED UP VIA RADSEC
COLOR KEY
COLOR DESCRIPTION
DISTRIBUTION/RETAIL
POWER SUPPLY TRANSMISSION
NOTES:
FK-115-5000=GENERAL ELECTRIC TYPE OIL CIRCUIT BREAKERS.
DZ-200B=ALLIS-CHALMERS TYPE OIL CIRCUIT BREAKERS.
SUPERVISORY CONTROL AND TELEMETERING SYSTEM TO STA.13.
① KEY INTERLOCKED-THE AIR CIR.BRKR.ON THE SEC.SIDE OF THE STA.SER. TRANSF.MUST BE OPEN TO RELEASE THE KEY TO THE PRIMARY FUSE COMPT.
1-48 VOLT SUPERVISORY CONTROL BATTERY WITH CHARGER.
1-130 VOLT CONTROL BATTERY WITH CHARGER.
* NOT IN USE-SHORTED OUT.
⊕ LOCKED IN THE CLOSED POSITION WITH A CODE LOCK.
STA.SER
TRANSF.110A
SP.
456-H2 Ⓐ
456-H1 Ⓐ
SEC.2 TO TIE BUS
SEC.1 TO TIE BUS
456-001
456-H4
FUT.TRANSF.
456-H3 Ⓐ
SEC.2
BUSES
TIE BUS
13.8KV.
SEC.1
STA.SER EMERGENCY FEED 26-07
LOC.IN CONTROL HOUSE
EMERG.SUPPLY 456-H4 COMM.CIR.
BOSTON EDISON COMPANY
DELIVERY ENGINEERING DEPARTMENT
ELECTRICAL DESIGN DRAFTING GROUP
DATE FEB. 12,1996
456
_STA_DIA\STA456, 05/14/96 at 13:42

2003 T&D OPERATING STUDY
WALPOLE DISTRICT

STATION #470 CANTON

Transformer #110A: McGraw-Edison 24/32/40 MVA 115/13.8 kV
Transformer #110B: Westinghouse 30/40 MVA 103.95 / 13.8 kV
Transformer #110C: Westinghouse 30/40 MVA 103.95 / 13.8 kV

Overload Ratings:

Transformer	Nameplate	12 hour LTE, 90F Ambient	12 hour LTE, 110F Ambient
110A	24/32/40 MVA	48 MVA	44 MVA
110B	30/40 MVA	56 MVA	52 MVA
110C	30/40 MVA	56 MVA	52 MVA

Station Capabilities:

Total Station Capacity (N)	Station Firm Capacity (LTE)	RADSEC Transfer	Manual Transfer	Total LCC
120 MVA	89 MVA	12.8 MVA	0 MVA	101.8 MVA

Switching Actions:

Loss of Transformer #110A:

Open: Circuit Switcher #CS770
Main 110A 13.8kV Circuit Breaker
Close: ABR scheme closes 13.8V bus tie breakers automatically *

Loss of Transformer #110B:

Open: Circuit Switcher #CS771
Main 110B 13.8kV Circuit Breaker
Close: ABR scheme closes 13.8V bus tie breakers automatically *

Loss of Transformer #110C:

Open: 115kV Circuit Breaker #5
Main 110C 13.8kV Circuit Breaker
Close: ABR scheme closes 13.8V bus tie breakers automatically *

*Note: ABR scheme modes of operation, from Station 470 Canton 1-line diagram:

ABR SEQUENCE OF OPERATION

Condition, Loss of>>	447-508	447-509	T110A	T110B	T110C	*447-509 Mode* Normal	**447-508 MODE** Normal
OCB 2	Open	Closed	Open	Open	Open	Open	Closed
OCB 5	Closed	Open	Closed	Closed	Open	Closed	Open
CS 770	Closed	Open	Open	Closed	Closed	Closed	Closed
CS 771	Open	Closed	Closed	Open	Closed	Closed	Closed
110A to Section 1	Closed	Open	Open	Closed	Closed	Closed	Closed
110B to Section 2	Open	Closed	Closed	Open	Closed	Closed	Closed
110C to Section 3	Closed	Closed	Closed	Closed	Open	Closed	Closed
Section 1 to Tie	Open	Closed	Closed	Open	Open	Open	Open
Section 2 to Tie	Closed	Closed	Closed	Closed	Closed	Open	Open
Section 3 to Tie	Closed	Closed	Closed	Closed	Closed	Closed	Closed

For loss of any transformer, transfer of the following DSS lines via RADSEC switches may also be required:

Canton 470-H1 to Baker Street 110 via Station 20-H3 via RADSEC MRU 047 for a transfer of 6.5 MVA

Canton 470-H5 to Walpole 135-1319H via RADSEC MRU 958 for a transfer of 6.4 MVA

Total Transfers: 12.8 MVA

Results:

Loading - For the load transfer of 470-H1 to 20-H3, there may be heavy loading conditions on the 500 kcmil station getaway of 20-H3 that may require an upgrade of the conductor. Further, it may be necessary to upgrade a voltage regulator to a larger size of bank of regulators.

For the load transfer of 470-H5 to 135-1319H1, there may be heavy loading conditions on segments of the mainline primary conductor that may be require an upgrade of the conductor. Further, it may be necessary to upgrade a voltage regulator to a larger size of bank of regulators.

Voltage - No low voltage conditions were identified.

Additional Actions Required:

None

STATION 470

WALPOLE ST. AT NEPONSET ST. CANTON

TEL # (508)-660-5271

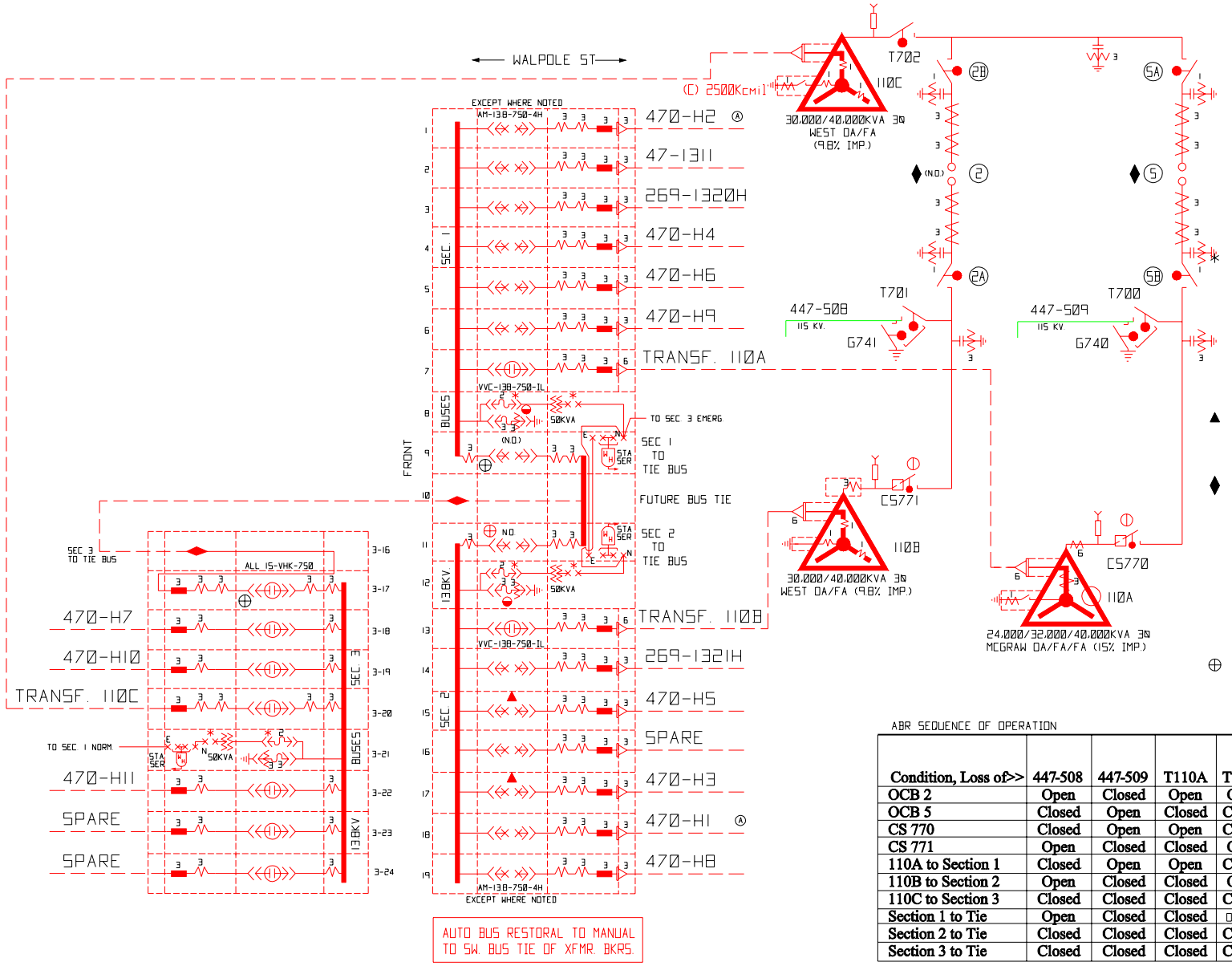

AUTO BUS RESTORAL TO MANUAL TO SW. BUS TIE OF XFMR. BKRS.

NOTES :

15-VHK-750 - ABB TYPE VACUUM BREAKERS (RETROFITTED BY ESI)

VVC-138-750-IL=GE TYPE VACUUM BREAKERS.

AM-138-750-4H=G.E. TYPE AIR CIRCUIT BREAKERS.

KIRK INTERLOCK = STA. SER. SEC. BREAKER MUST BE OPEN TO PERMIT WITHDRAWAL OF PRIMARY FUSES FROM OPERATING POSITION. 1-130V. CONTROL BATTERY - WITH CHARGER 1-48V. SUPERVISORY CONTROL BATTERY WITH CHARGER. SUPERVISORY CONTROL TO SCADA CENTER. BOTH RADIO CONTROLLED LOAD RELIEF & VOLTAGE REDUCTION AVAILABLE AT THIS STATION.

⦶ CIRCUIT SWITCHERS EQUIPPED WITH SHUNT TRIP DEVICE.

◒ NON - STANDARD BUS POTENTIAL TRANSFORMERS, RATIO 121:1

▲ AUTOMATIC LOAD DISCONNECTING SCHEME INSTALLED. CIRCUIT BREAKERS OPEN ONE AT A TIME IF LOAD THROUGH ANY TRANSFORMER CIRCUIT BREAKER EXCEEDS 2500AMPS FOR PRE-SET TIME DELAY.

♦ 115KV ABR ON LOSS OF EITHER 115KV SOURCE OCB WILL TRIP AND ALTERNATE OCB WILL CLOSE. THE SCHEME WILL ALSO TRIP THE CIRCUIT SWITCHER AND SECONDARY BREAKER OF EITHER 110A OR 110B.

IN THE "MANUAL" MODE, YOU CAN SELECT EITHER "447-508 OR "447-509".

IN THE "447-508" MODE, YOU HAVE TO GO TO THE "MANUAL" MODE FIRST, BEFORE YOU CAN GO TO THE "447-509" MODE.

IN THE "447-509" MODE, YOU HAVE TO GO TO THE "MANUAL" MODE FIRST, BEFORE YOU CAN GO TO THE "447-508" MODE.

⊕ 14KV AUTO. BUS RESTORAL SCHEME-SEE CHART BELOW

ABR SEQUENCE OF OPERATION

Condition, Loss of>>	447-508	447-509	T110A	T110B	T110C	*447-509 Mode* Normal	447-508 MODE Normal
OCB 2	Open	Closed	Open	Open	Open	Open	Closed
OCB 5	Closed	Open	Closed	Closed	Open	Closed	Open
CS 770	Closed	Open	Open	Closed	Closed	Closed	Closed
CS 771	Open	Closed	Closed	Open	Closed	Closed	Closed
110A to Section 1	Closed	Open	Open	Closed	Closed	Closed	Closed
110B to Section 2	Open	Closed	Closed	Open	Closed	Closed	Closed
110C to Section 3	Closed	Closed	Closed	Closed	Open	Closed	Closed
Section 1 to Tie	Open	Closed	Closed	OPEN	Open	Open	Open
Section 2 to Tie	Closed	Closed	Closed	Closed	Closed	Open	Open
Section 3 to Tie	Closed	Closed	Closed	Closed	Closed	Closed	Closed

NSTAR ELECTRIC
AN NSTAR COMPANY

470

DATE	DESCRIPTION	BY	CHCK
1/16/02	UPDATED 14KV ABR DESCRIPTION	WJB	RBB
7/16/01	REVISED DWG FOR ADDITION OF BUS SECTION #3	EBA	RBB
3/28/01	ADDED 115KV BKR's 2 & 5, TRANSF. & MOVED TRANSF. 110A	DBG	
8/9/00	UPDATED TR. 110A	WJB	RBB

_STA_DIA\Sta470.dwg, 01/16/02 at 08:59

D.T.E. 03-121
Attachment AG-1-10 (b) (Supplemental)

Appendix C

Table of Contents

New Bedford District
Bulk Substation Transformer / DSS Line Outages 4

Plymouth District
Bulk Substation Transformer / DSS Line Outages 60

Cape & Vineyard District
Bulk Substation Transformer / DSS Line Outages 101

Martha's Vineyard 23kV Submarine Cable Outages 154

New Bedford District

Bulk Substation Transformer Outages

Distribution Supply Line Outages

Thermal Results and Remedial Switching Actions

2003 T&D OPERATING STUDY
NEW BEDFORD DISTRICT

ACUSHNET #112 TRANSFORMER OUTAGE CONTINGENCY

Magnetek 37.5/50/62.5 [70] MVA Transformer

Overload Ratings:

Summer Normal	84 MVA
Summer Emergency	91 MVA
Winter Normal	93 MVA
Winter Emergency	99 MVA

Switching Actions:

Open: Circuit Switcher 11227
Main Circuit Breaker 112N21

Close: Tie Circuit Breaker 114N21

Results:

After closure of 13.2kV bus ties, Acushnet #114 transformer carries full station load. Bus tie breaker carries 17.7 MVA (rated for 45 MVA). No rating or voltage violations. See **Diagram NB-1**.

Additional Actions Required:

None

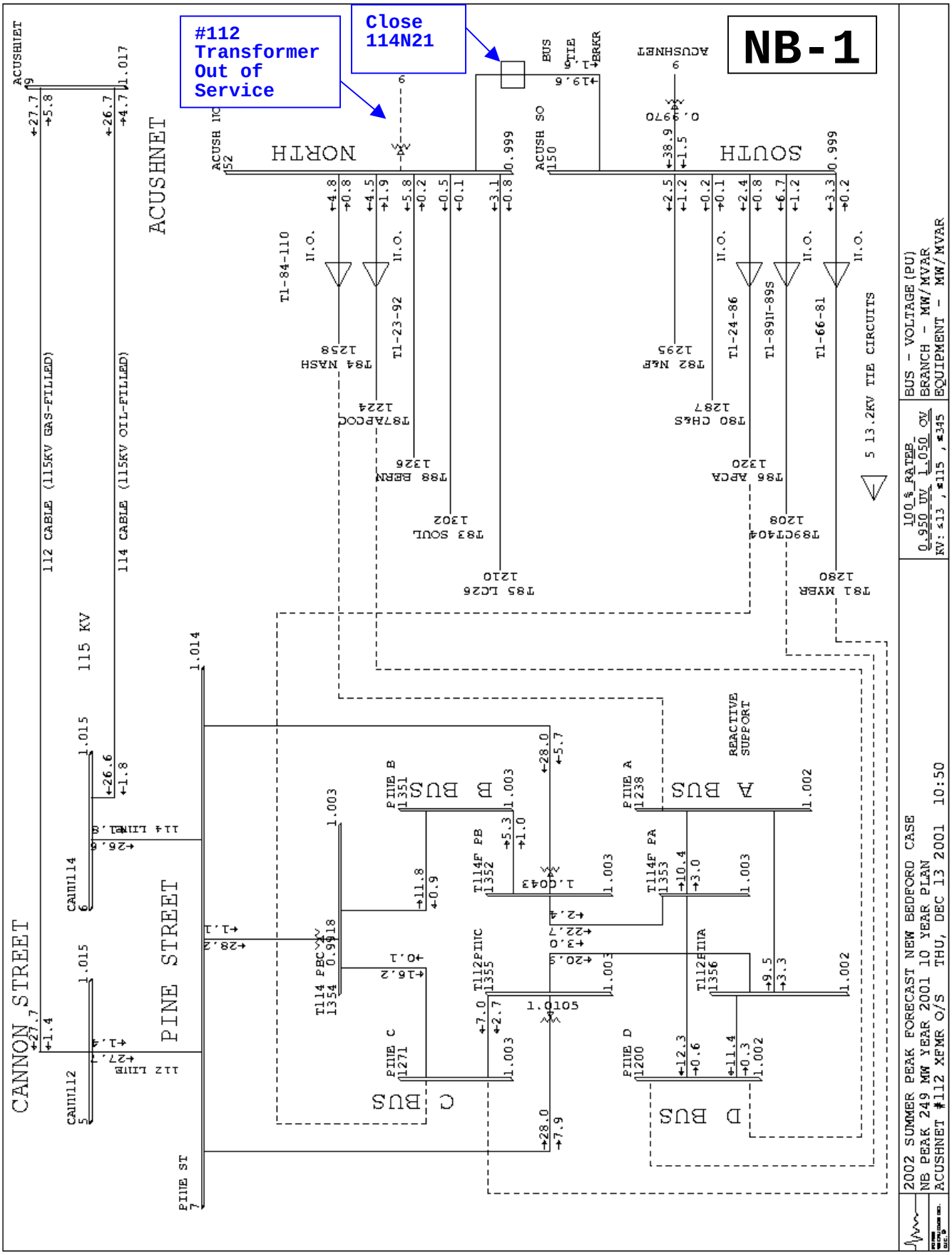
#112 Transformer Out of Service
Close 114N21
NB-1
ACUSHNET
NORTH
SOUTH
CANNON STREET
PINE STREET
115 KV
112 CABLE (115KV GAS-FILLED)
114 CABLE (115KV OIL-FILLED)
5 13.2KV TIE CIRCUITS
REACTIVE SUPPORT
A BUS
B BUS
C BUS
D BUS
BUS - VOLTAGE (PU)
BRANCH - MW/MVAR
EQUIPMENT - MW/MVAR
100% RATEB
0.950 UV 1.050 OV
KV: ≤13 , ≤115 , ≤345
2002 SUMMER PEAK FORECAST NEW BEDFORD CASE
NB PEAK 249 MW YEAR 2001 10 YEAR PLAN
ACUSHNET #112 XFMR O/S THU, DEC 13 2001 10:50

2003 T&D OPERATING STUDY
NEW BEDFORD DISTRICT

ACUSHNET #114 TRANSFORMER OUTAGE CONTINGENCY

ABB 37.5/50/62.5 [70] MVA Transformer

Overload Ratings:

Summer Normal	80 MVA
Summer Emergency	87 MVA
Winter Normal	88 MVA
Winter Emergency	94 MVA

Switching Actions:

Open: Circuit Switcher 11427
Main Circuit Breaker 114S21

Close: Tie Circuit Breaker 112S21

Results:

After closure of 13.2kV bus ties, Acushnet #112 transformer carries full station load. Bus tie breaker carries 19.5 MVA (rated for 45 MVA). See **Diagram NB-2.**

Loading	No heavy loading conditions were identified.
Voltage	No low voltage conditions were identified.

Additional Actions Required:

None

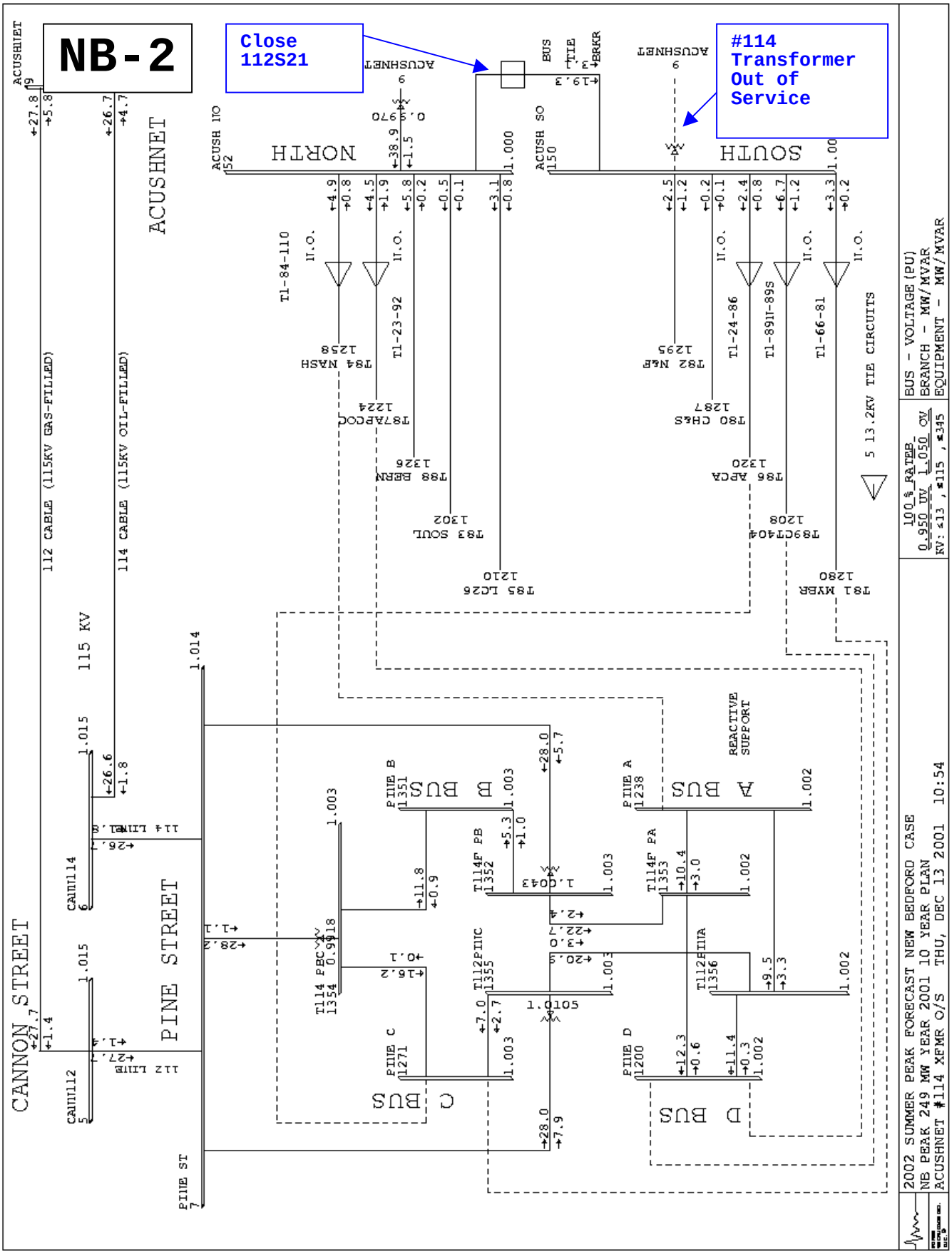
NB-2
Close 112S21
#114 Transformer Out of Service
ACUSHNET
NORTH
SOUTH
CANNON STREET
PINE STREET
115 KV
112 CABLE (115KV GAS-FILLED)
114 CABLE (115KV OIL-FILLED)
5 13.2KV TIE CIRCUITS
REACTIVE SUPPORT
A BUS
B BUS
C BUS
D BUS
BUS - VOLTAGE (PU)
BRANCH - MW/MVAR
EQUIPMENT - MW/MVAR
100% RATEB
0.950 UV 1.050 OV
KV: ≤13 , ≤115 , ≤345
2002 SUMMER PEAK FORECAST NEW BEDFORD CASE
NB PEAK 249 MW YEAR 2001 10 YEAR PLAN
ACUSHNET #114 XFMR O/S THU, DEC 13 2001 10:54

ACUSHNET DISTRIBUTION SUPPLY FEEDER CONTINGENCIES

28-Mar-02

* Coincident Feeder peaks at Forecasted 2002 New Bedford District Peak
* Switching Sequences and Effects of Load Transfer Under Coincident Peak Conditions

CKT. NUMBER	COINCIDENT PEAK LOAD (MW)	(MVA)	BACKUP CIRCUIT	SWITCHING ACTIONS	BACKUP CKT LOAD (BEFORE) (MW)	(AFTER) (MVA)	(MW)	(MVA)	SCADA ALARM (MVA)	PROBLEM AREAS
Acushnet #112 North Bus										
231	0.8	0.9	241	CLOSE T1-231-241 OPEN 23121	5.7	5.9	6.5	6.7	13.0	
84	4.9	4.9	110	CLOSE T1-84-110 OPEN 8421	2.4	2.5	7.3	7.3	6.6 *	Ckt 110 flo 11% over 6.6 MVA SCAA AlarmLimit
87	4.5	4.9	23	CLOSE T1-23-92 OPEN 8721	1.2	1.3	5.8	5.9	6.6	
88	3.4	3.5	231	CLOSE T1-88-231 OPEN 8821	0.8	0.9	4.2	4.3	* 6.6	Note: Circuit 88 can no longer be backed up by T1-88-96 at Aerovox
83	0.5	0.5	80	CLOSE 8027 OPEN 8321 OPEN 8327	0.2	0.2	0.7	0.7	7.0	
85	3.1	3.2	82	CLOSE T1-82-85 OPEN 8521	2.5	2.8	5.6	6.0	6.6	
Acushnet #114 South Bus										
230	4.1	4.1	240	CLOSE T1-230-240 OPEN 23021	6.8	7.1	10.8	10.9	17.5	
82	2.5	2.8	85	CLOSE T1-82-85 OPEN 8221	3.1	3.2	5.6	6.0	6.6	
80	0.2	0.2	83	CLOSE 8027 OPEN 8021	0.5	0.5	0.7	0.7	6.6	
86	2.4	2.5	24	CLOSE T1-24-86 OPEN 8621	5.1	5.3	7.6	7.9	* 6.6	Ckt 24 flow 19% over 6.6 MVA SCADA Alarm Limit; 1% over trip Note: Pre-Highland Swap to 80/83
89N	4.9	5.0	89S	CLOSE T1-89N-89S OPEN 8921 OPEN 8957 CLOSE 8657	2.3	2.4	7.3	7.5	* 6.6	Ckt 89-S flow 14% over 6.6 MVA SCADA Alarm Limit and at 94% of 8 MVA 500 MCM cable normal rating Note: Church St. on 105 circuit
				(Transfer Building 19 to #86 Circuit)						
81	3.3	3.3	66	CLOSE T1-66-81 OPEN 8121	3.5	4.0	6.8	7.1	7.2	Ckt 66 at 99% of 7.2 MVA SCADA Alarm Limit

2003 T&D OPERATING STUDY
NEW BEDFORD DISTRICT

ARSENE ST. TRANSFORMER OUTAGE CONTINGENCY

McGraw/Edison 21/28/35 MVA Transformer

Overload Ratings:

Summer Normal	38 MVA
Summer Emergency	41 MVA
Winter Normal	44 MVA
Winter Emergency	47 MVA

Switching Actions:

Open: Circuit Switcher 11242
Main Circuit Breaker 112B42
Circuit Breaker #22042 at Arsene Street

Close: Tie Switch T1-221-301 on R.O.W.
Tie Switch T1-220-240 on Alden Rd. North of Bridge St.

Results:

The #301 circuit out of Crystal Spring is used to pick up only the #221 and #222 circuits by backfeeding the Arsene Street 13.2kV bus. The #240 circuit out of Wing Lane is used to pick up the #220 circuit via tie switch #T1-220-240 on Alden Road.
Reference **Diagrams NB-3, NB-4,** and **NB-5.**

Loading: No heavy loading conditions were identified.

Voltage: No low voltage conditions were identified.

Additional Actions Required:

None

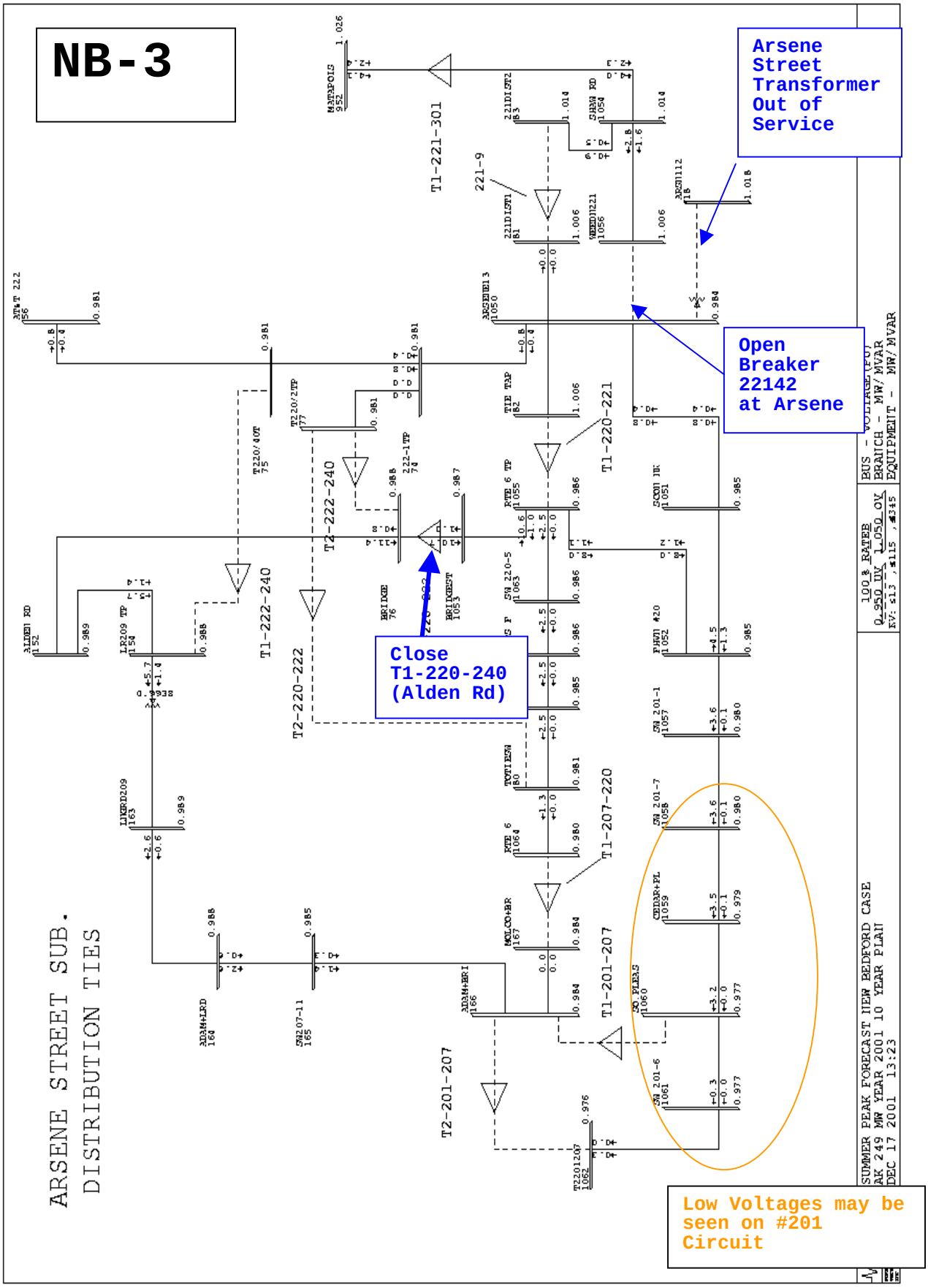
NB-3
Arsene Street Transformer Out of Service
Open Breaker 22142 at Arsene
Close T1-220-240 (Alden Rd)
Low Voltages may be seen on #201 Circuit
ARSENE STREET SUB.
DISTRIBUTION TIES
T1-221-301
T1-220-221
T1-220-240
T2-220-240
T2-220-222
T1-207-220
T1-201-207
T2-201-207
SUMMER PEAK FORECAST NEW BEDFORD CASE
AK 249 MW YEAR 2001 10 YEAR PLAN
DEC 17 2001 13:23

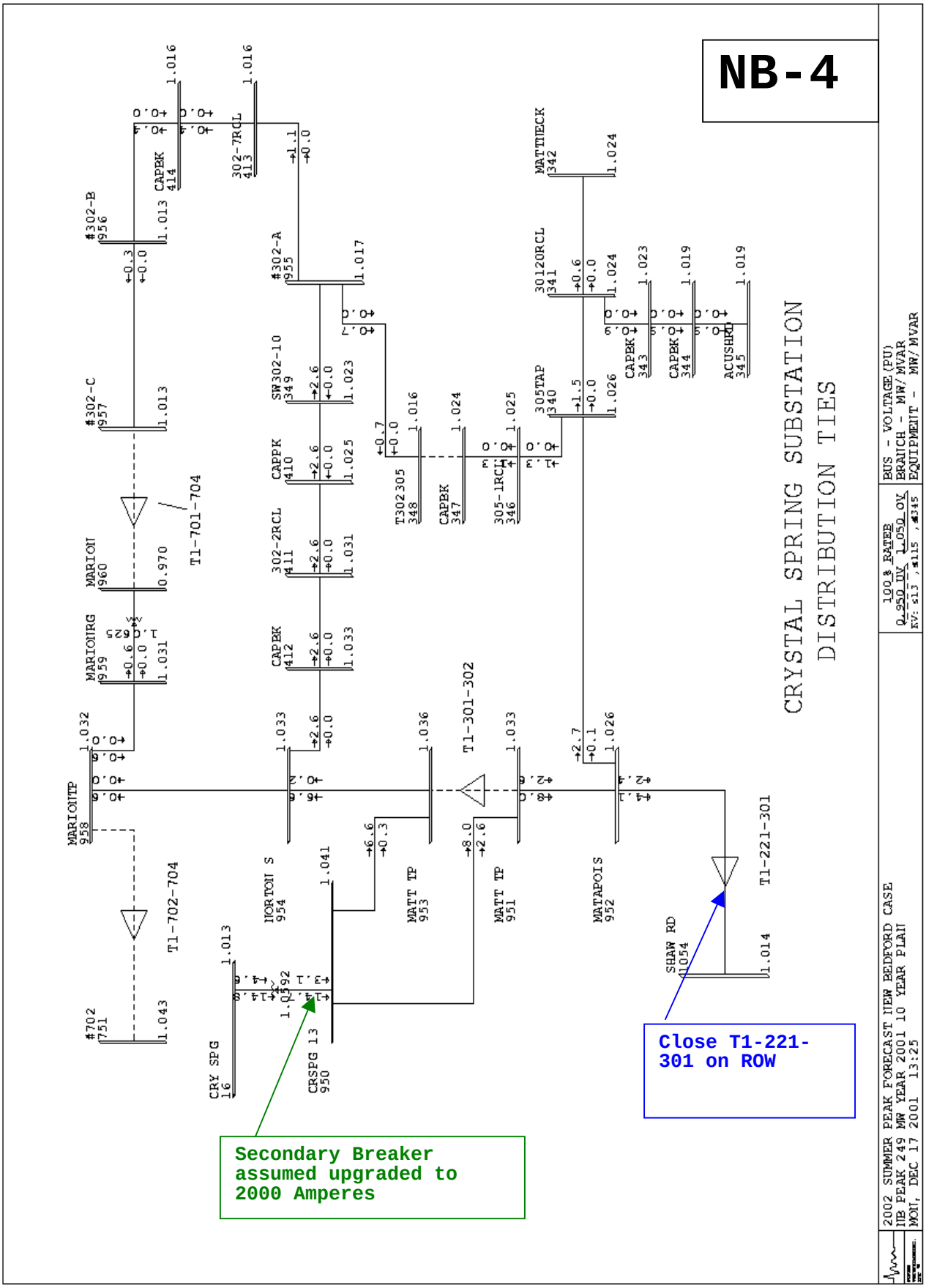
NB-4
CRYSTAL SPRING SUBSTATION
DISTRIBUTION TIES
Close T1-221-301 on ROW
Secondary Breaker assumed upgraded to 2000 Amperes
2002 SUMMER PEAK FORECAST NEW BEDFORD CASE
NB PEAK 249 MW YEAR 2001 10 YEAR PLAN
MON, DEC 17 2001 13:25
BUS - VOLTAGE(PU)
BRANCH - MW/MVAR
EQUIPMENT - MW/MVAR
100% RATEB
0.950 UV 1.050 OV
T1-701-704
T1-702-704
T1-301-302
T1-221-301
#302-B 956
#302-C 957
MARION 960
MARIONRG 959
MARIONTP 958
#702 751
CAPBK 414
302-7RCL 413
#302-A 955
SW302-10 349
CAPPK 410
302-2RCL 411
CAPBK 412
T302305 348
CAPBK 347
305-1RCL 346
MATTNECK 342
30120RCL 341
305TAP 340
CAPBK 343
CAPBK 344
ACUSHRD 345
NORTON S 954
MATT TP 953
MATT TP 951
MATAPOIS 952
SHAW RD 1054
CRY SPG 16
CRSPG 13 950

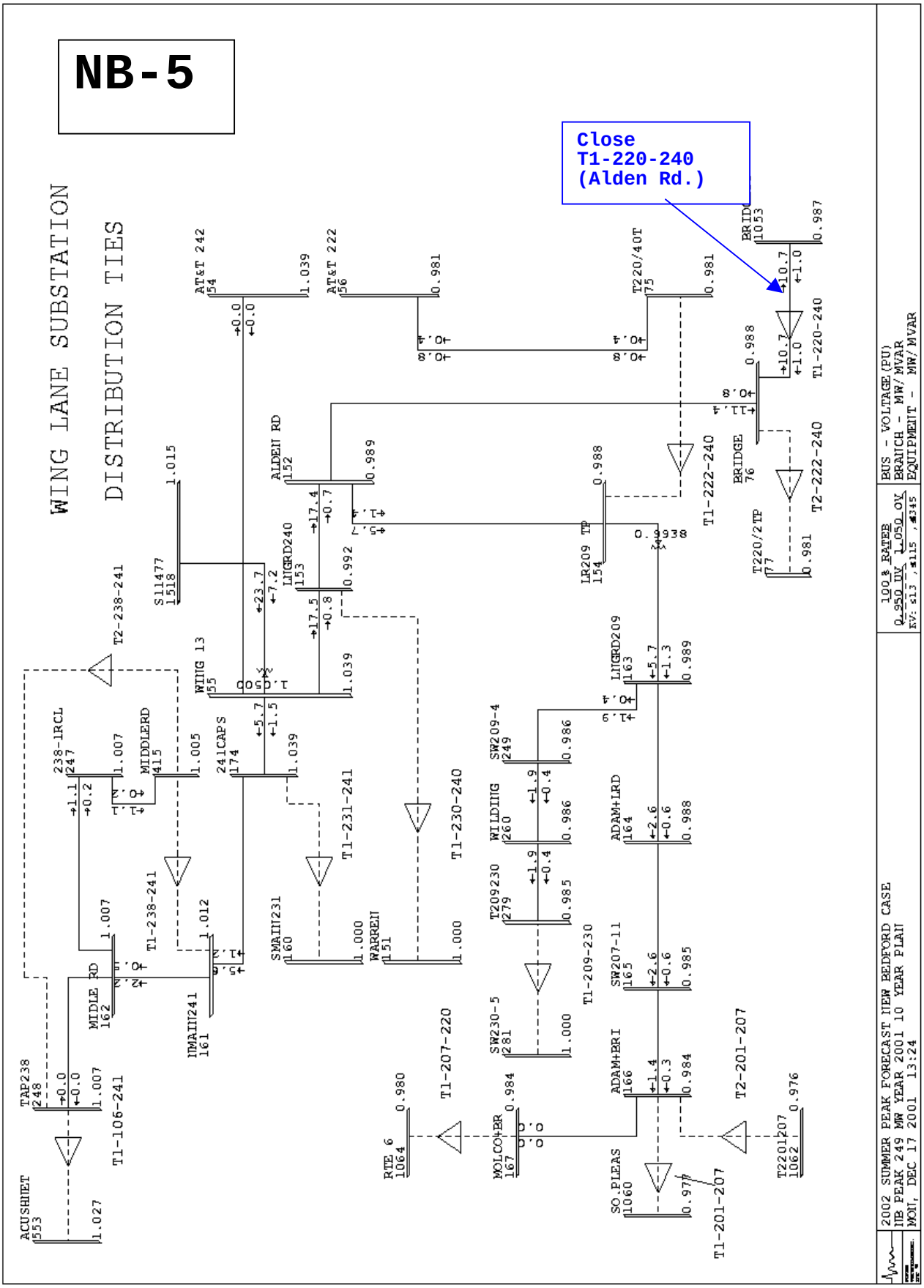
NB-5
Close
T1-220-240
(Alden Rd.)
WING LANE SUBSTATION
DISTRIBUTION TIES
2002 SUMMER PEAK FORECAST NEW BEDFORD CASE
NB PEAK 249 MW YEAR 2001 10 YEAR PLAN
MON, DEC 17 2001 13:24
100% RATED
0.950 UV 1.050 OV
KV: ≤13 ,≥115 ,≥345
BUS - VOLTAGE(PU)
BRANCH - MW/MVAR
EQUIPMENT - MW/MVAR

BULK SUBSTATION DSS LINE SINGLE-CONTINGENCY ANALYSIS

- Coincident Feeder peaks at Forecasted Summer 2002 District Peaks
- Switching Sequences and Effects of Load Transfer Under Coincident Peak Conditions

CIRCUIT NUMBER	COINCIDENT PEAK LOAD (MW)	(MVA)	NUMBER CUSTOMERS	BACKUP CIRCUIT	BACKUP STATION	SWITCHING ACTIONS	BACKUP CKT. LOAD (BEFORE) (MW)	(MVA)	(AFTER) (MW)	(MVA)	SCADA ALARM (MVA)	PROBLEM AREAS
Arsene Street Substation												
220	9.9	9.9	3583	240	Wing Lane	CLOSE T1-220-240 OPEN 22042	6.8	7.1	16.7	16.8	17.5	
221	4.0	4.6	1097	301	Crystal Spg.	CLOSE T1-221-301 OPEN 22142	4.0	4.0	8.0	8.4	9.9	Note: Assumes Crystal Spring Main Breaker upgraded, and SCADA Alarm Settings have been updated
222	0.8	0.9	22	242	Wing Lane	CLOSE AT&T TIE OPEN 22242 OR CLOSE T2-220-222	0.0	0.0	0.8	0.9	9.8	

2003 T&D OPERATING STUDY
NEW BEDFORD DISTRICT

ASSONET AUTOTRANSFORMER OUTAGE CONTINGENCY

5/5.6 MVA 34.5/13.2 KV Autotransformer

Overload Ratings: (None Calculated for this transformer)

Switching Actions:

Open: Motor-Operated Switch 63435 at W. Freetown
Recloser 605-1 at W. Freetown
Recloser 604-1 on Chace Rd.

Close: Tie Switch T1-102-605 on Bullock Rd. at Chace Rd.
Tie Switch T1-602-604 on Washburn Rd.

Put #605 circuit regulators on Slab Bridge Road in automatic mode per online SCADA instructions #605 circuit page #1.

Results:

Based on the recent completion of the replacement of the 500 kcmil cable getaway on the #102 circuit at Industrial Park Substation and the upgrade of approximately ½ of the line upgrade on the 1/0 ACSR conductor overhead line section, the #102 circuit will no longer experience any loading or voltage concerns.

A loadflow diagram of expected conditions post-upgrade, with the #102 circuit backing up the Assonet #605 circuit, appears in diagram **NB-7**.

Loading No heavy loading conditions were identified.

Voltage	No low voltage conditions were identified.

Additional Actions Required:

None

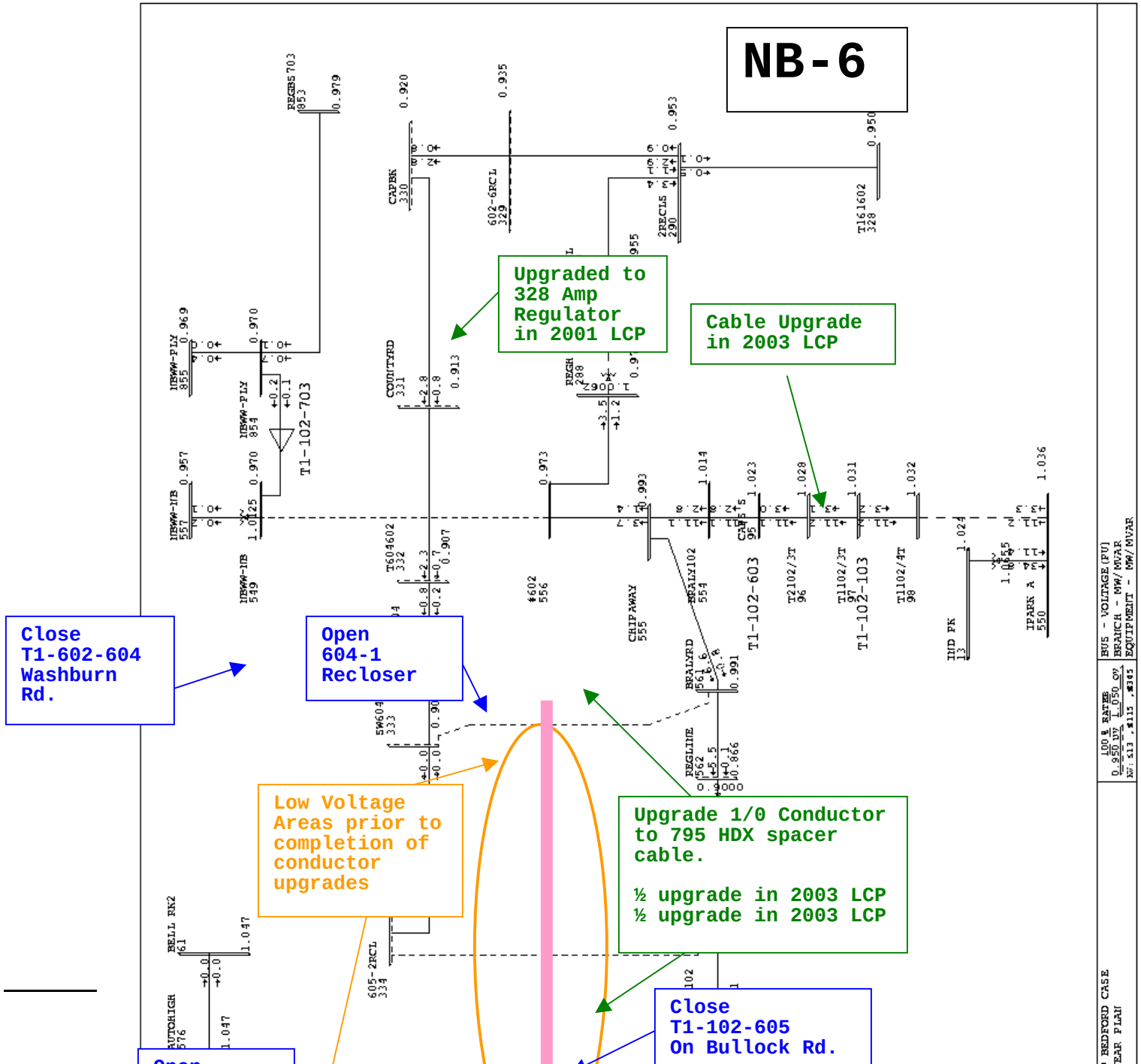
NB-6
Upgraded to 328 Amp Regulator in 2001 LCP
Cable Upgrade in 2003 LCP
Close T1-602-604 Washburn Rd.
Open 604-1 Recloser
Low Voltage Areas prior to completion of conductor upgrades
Upgrade 1/0 Conductor to 795 HDX spacer cable.
½ upgrade in 2003 LCP
½ upgrade in 2003 LCP
Close T1-102-605 On Bullock Rd.

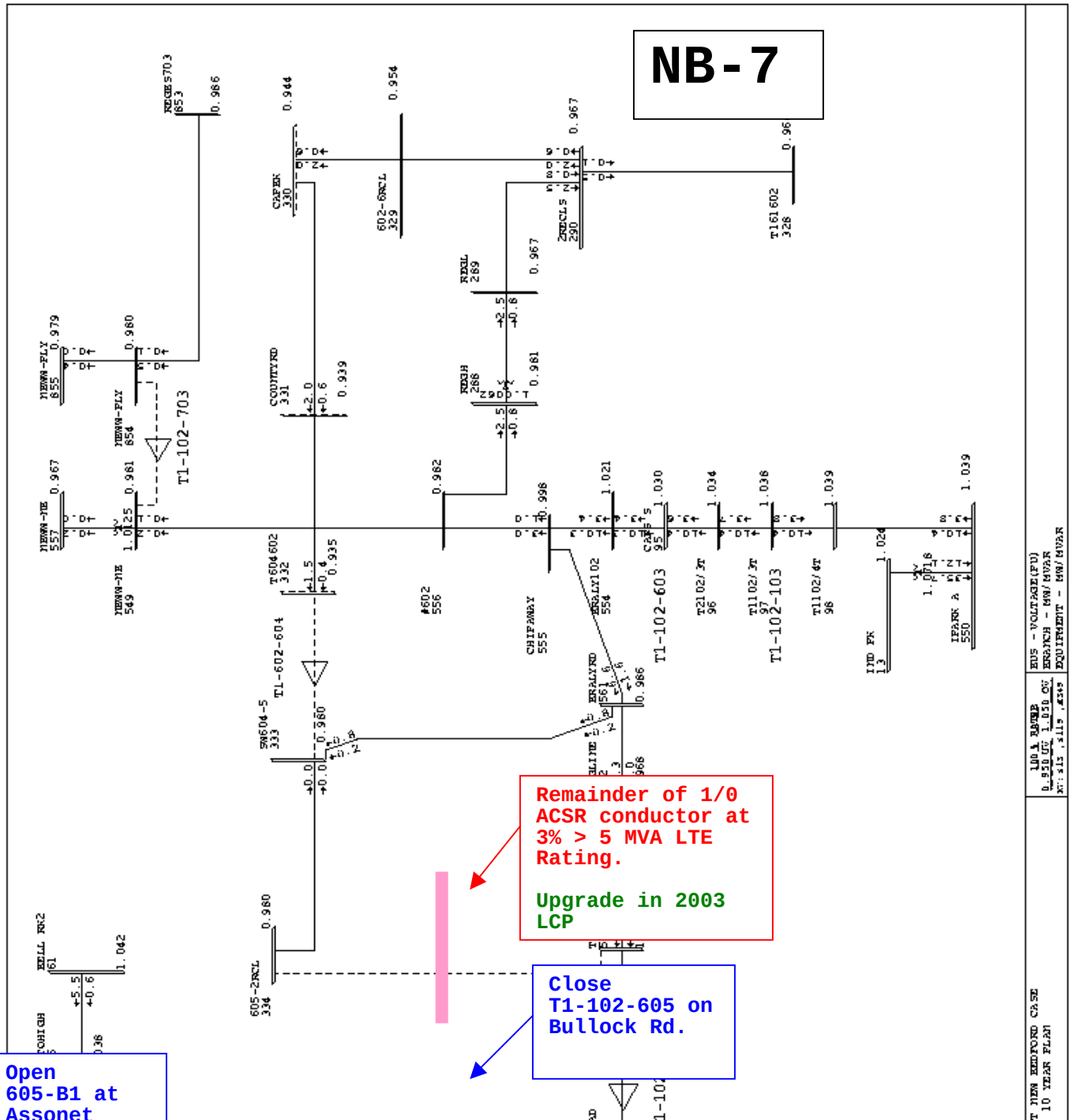
NB-7
Remainder of 1/0 ACSR conductor at 3% > 5 MVA LTE Rating.
Upgrade in 2003 LCP
Close T1-102-605 on Bullock Rd.
Open 605-B1 at Assonet

2003 T&D OPERATING STUDY
NEW BEDFORD DISTRICT

CROSS ROAD #109 TRANSFORMER OUTAGE CONTINGENCY

Allis-Chalmers 12/16/20 MVA Transformer

Overload Ratings:

Summer Normal	26 MVA
Summer Emergency	28 MVA
Winter Normal	30 MVA
Winter Emergency	31 MVA

Switching Actions:

Open: Circuit Switcher 10912
Main Circuit Breaker 109B12
Feeder Breaker 54112

Close: Bus Tie Breaker T1-12
Tie Switch T1-107-541

Results:

An upgrade of the main 13.2kV circuit breakers on both Cross Road transformers, and associated adjustments in SCADA alarm and trip settings, has been completed. The breakers on the #109 and #111 transformers were upgraded from 1200 Amp to 2000 Amp rating

Transfer of #541/542 circuits to Industrial Park #107 circuit must be accomplished before closing the Cross Road 13.2kV bus tie. It is

assumed that U-MASS Dartmouth Campus in on Fisher Road #525 Circuit as a normal condition

#541/542 Circuits must be transferred to the Industrial Park #107 circuit to alleviate transformer loading on the #111 bank, before closure of T1-2 13.2kV bus tie breaker. Results identical to those in **Diagrams NB-8 through NB-11.**

Loading	No heavy loading conditions were identified.
Voltage	No low voltage conditions were identified.

Additional Actions Required:

None

Recommendations:

The need for a station upgrade in the Cross Road / Fisher Road area will be reevaluated as part of the 2003 10-Year T&D Study. A preliminary assessment indicates a need to upgrade Cross Road to two (2) 30/40/50 MVA transformers starting Summer 2006.

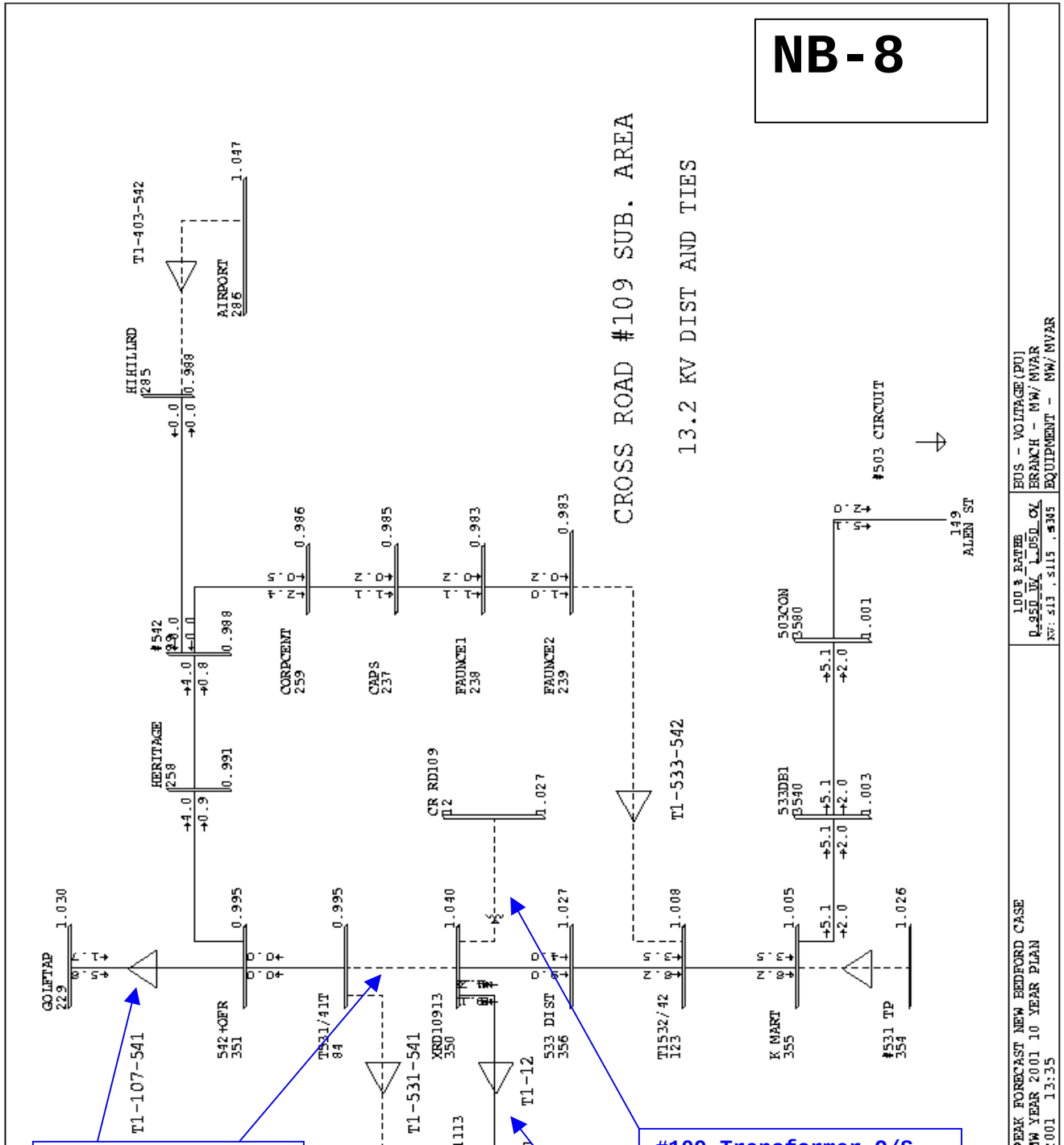
NB-8
CROSS ROAD #109 SUB. AREA
13.2 KV DIST AND TIES
T1-403-542
AIRPORT
286
HIHILLRD
285
#542
HERITAGE
258
CORPCENT
259
CAPS
237
FAUNCE1
238
FAUNCE2
239
CR RD109
12
T1-533-542
503CON
3580
533DB1
3540
#503 CIRCUIT
149
ALEN ST
GOLFTAP
229
542+OFR
351
T531/41T
84
XRD10913
350
533 DIST
356
T1532/42
123
K MART
355
#531 TP
354
T1-107-541
T1-531-541
T1-12
BUS - VOLTAGE(PU)
BRANCH - MW/MVAR
EQUIPMENT - MW/MVAR
100 % RATED
PEAK FORECAST NEW BEDFORD CASE
YEAR 2001 10 YEAR PLAN
13:35

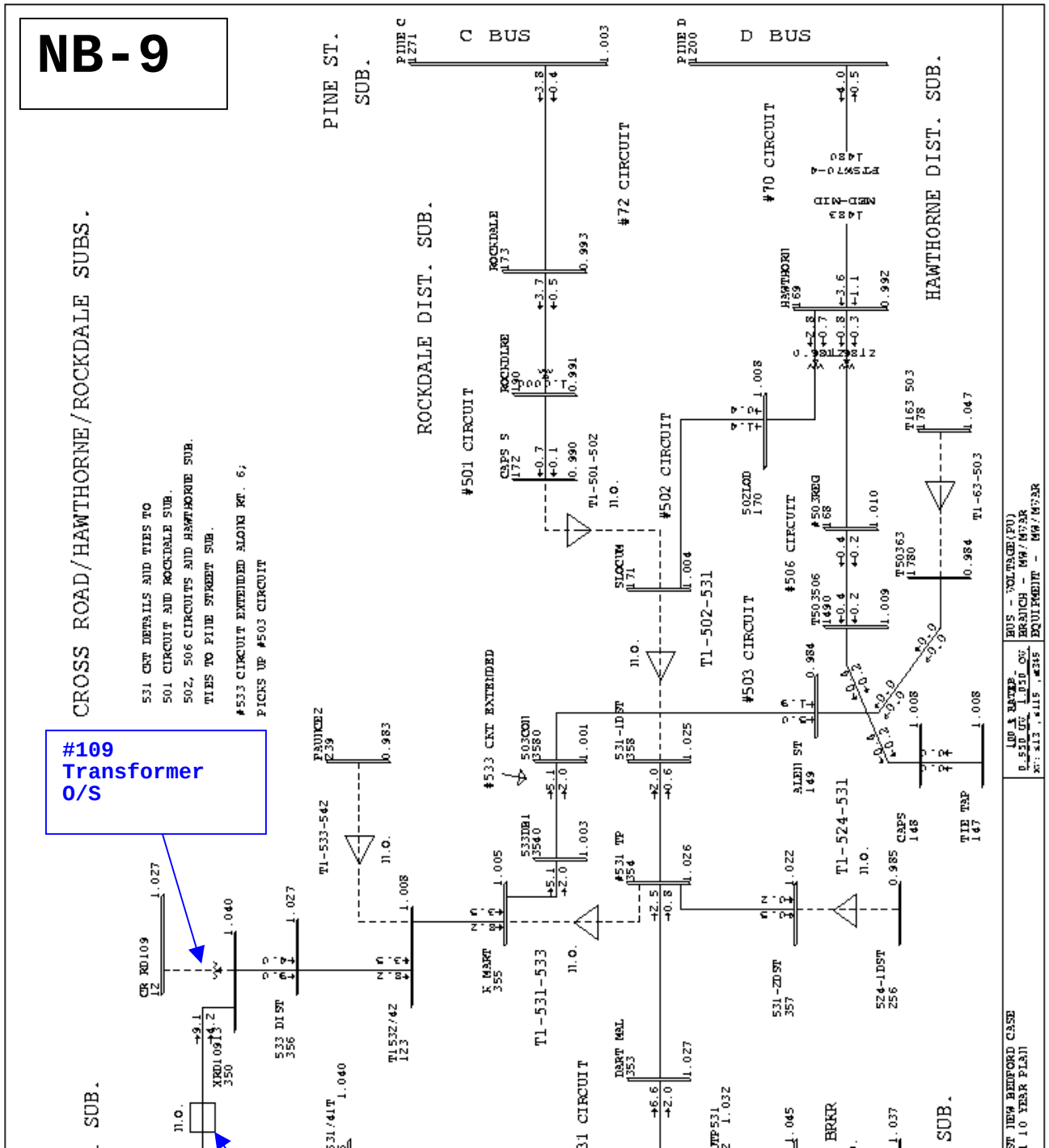
NB-9
#109 Transformer O/S
CROSS ROAD/HAWTHORNE/ROCKDALE SUBS.
PINE ST. SUB.
ROCKDALE DIST. SUB.
HAWTHORNE DIST. SUB.
C BUS
D BUS
#501 CIRCUIT
#502 CIRCUIT
#503 CIRCUIT
#506 CIRCUIT
#70 CIRCUIT
#72 CIRCUIT
T1-531-533
T1-524-531
T1-502-531
T1-533-542
T1-501-502
T1-63-503
#533 CKT EXTENDED
531 CKT DETAILS AND TIES TO
501 CIRCUIT AND ROCKDALE SUB.
502, 506 CIRCUITS AND HAWTHORNE SUB.
TIES TO PINE STREET SUB.
#533 CIRCUIT EXTENDED ALONG RT. 6;
PICKS UP #503 CIRCUIT

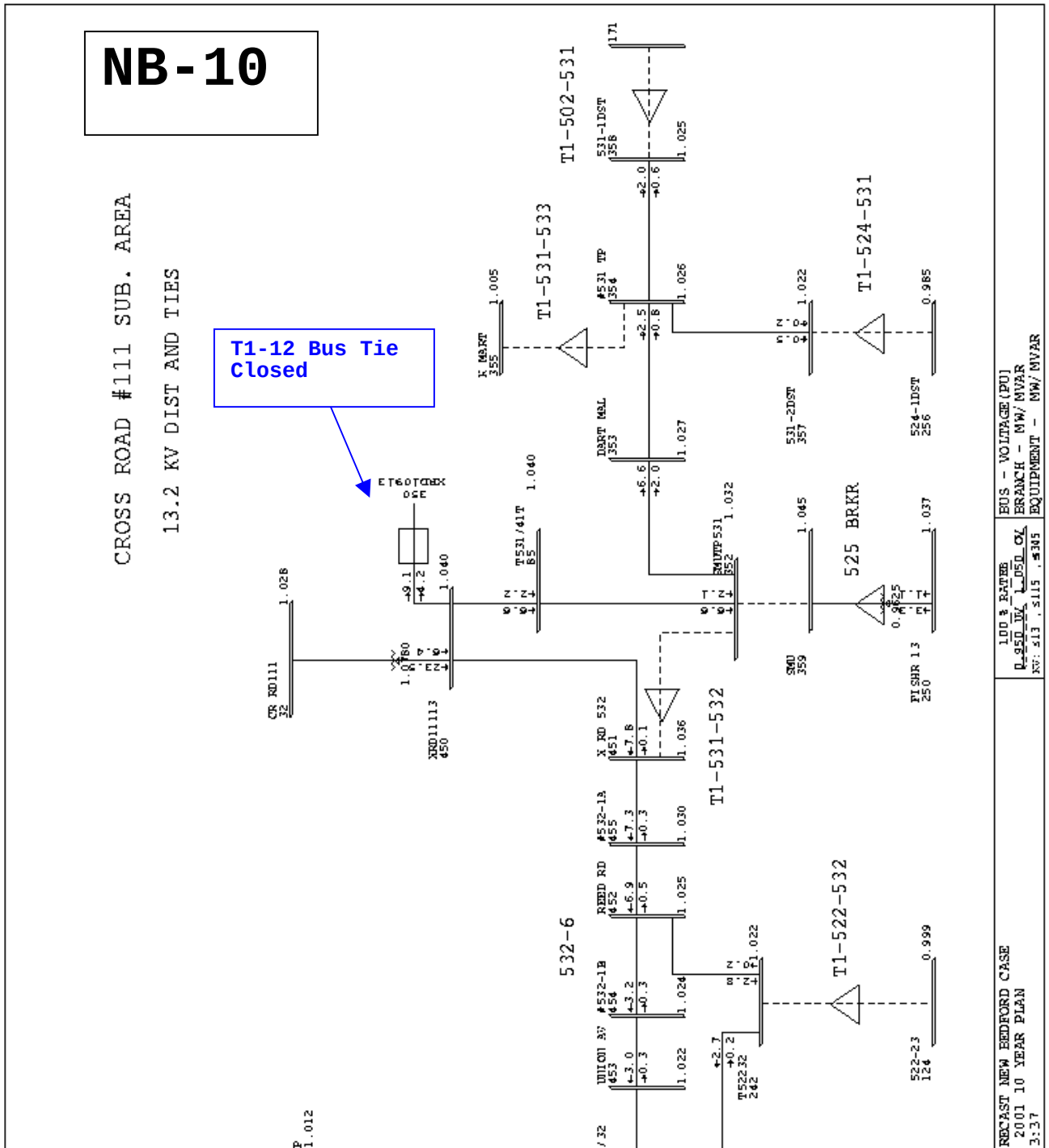
NB-10
CROSS ROAD #111 SUB. AREA
13.2 KV DIST AND TIES
T1-12 Bus Tie Closed
T1-502-531
T1-531-533
T1-524-531
T1-531-532
T1-522-532
525 BRKR
532-6
BUS - VOLTAGE(PU)
BRANCH - MW/MVAR
EQUIPMENT - MW/MVAR
FORECAST NEW BEDFORD CASE
2001 10 YEAR PLAN

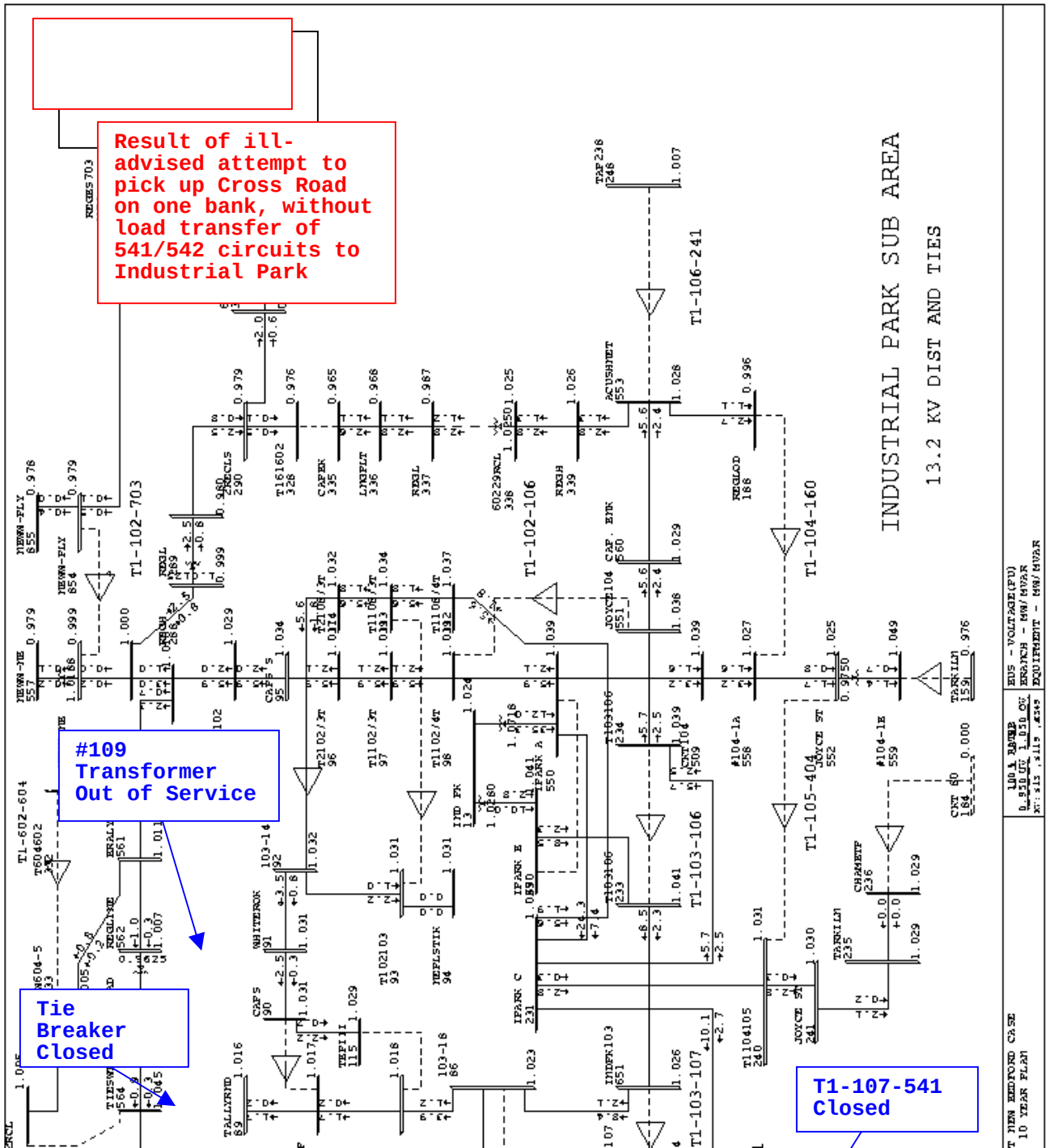
Result of ill-advised attempt to pick up Cross Road on one bank, without load transfer of 541/542 circuits to Industrial Park
#109 Transformer Out of Service
Tie Breaker Closed
T1-107-541 Closed
INDUSTRIAL PARK SUB AREA
13.2 KV DIST AND TIES
T1-102-703
T1-102-106
T1-106-241
T1-104-160
T1-105-404
T1-103-106
T1-103-107
T1-602-604

2003 T&D OPERATING STUDY
NEW BEDFORD DISTRICT

CROSS ROAD #111 TRANSFORMER OUTAGE CONTINGENCY

McGraw/Edison 12/16/20 MVA Transformer

Overload Ratings:

Summer Normal	29 MVA
Summer Emergency	32 MVA
Winter Normal	33 MVA
Winter Emergency	35 MVA

Switching Actions:

Open: Circuit Switcher 11112
Main Circuit Breaker 111B12
Feeder Breaker 54112
Recloser 503-19 (Tucker Rd. at State Rd.)
Recloser 50251 at Hawthorne Substation

Close: Cross Road 13.2kV Bus Tie Breaker T1-12
Tie Switch T1-541-107 (on ROW)
Tie Switch T1-503-506 (Corner of Allen Street and Slocum Rd.)
Tie Switch T1-501-502 (State Rd. and Slocum Rd.)

Results:

An upgrade of the main 13.2kV circuit breakers on both Cross Road transformers, and associated adjustments in SCADA alarm and trip

settings, has been completed. The breakers on the #109 and #111 transformers were upgraded from 1200 Amp to 2000 Amp rating.

Transfer of #541/542 circuits to Industrial Park #107 circuit still must be accomplished before closing the Cross Road 13.2kV bus tie. The need to transfer the #503 circuit to Hawthorne Substation, and the mandatory reduction of load on the Pine Street #70 circuit by transferring the #502 circuit to the Rockdale #501 circuit, can now be avoided. It is assumed that U-MASS Dartmouth Campus in on Fisher Road #525 Circuit as a normal condition.

#541/542 Circuits must be transferred to the Industrial Park #107 circuit to alleviate transformer loading on the #111 bank, before closure of T1-2 13.2kV bus tie breaker. Results shown in **Diagrams NB-15 through NB-17.**

Loading	No heavy loading conditions were identified.
Voltage	No low voltage conditions were identified.

Additional Actions Required:

None

Recommendations:

The need for a station upgrade in the Cross Road / Fisher Road area will be reevaluated as part of the 2003 10-Year T&D Study. A preliminary assessment indicates a need to upgrade Cross Road to two (2) 30/40/50 MVA transformers starting Summer 2006.

NB-12

Switching Required Pre-Upgrade

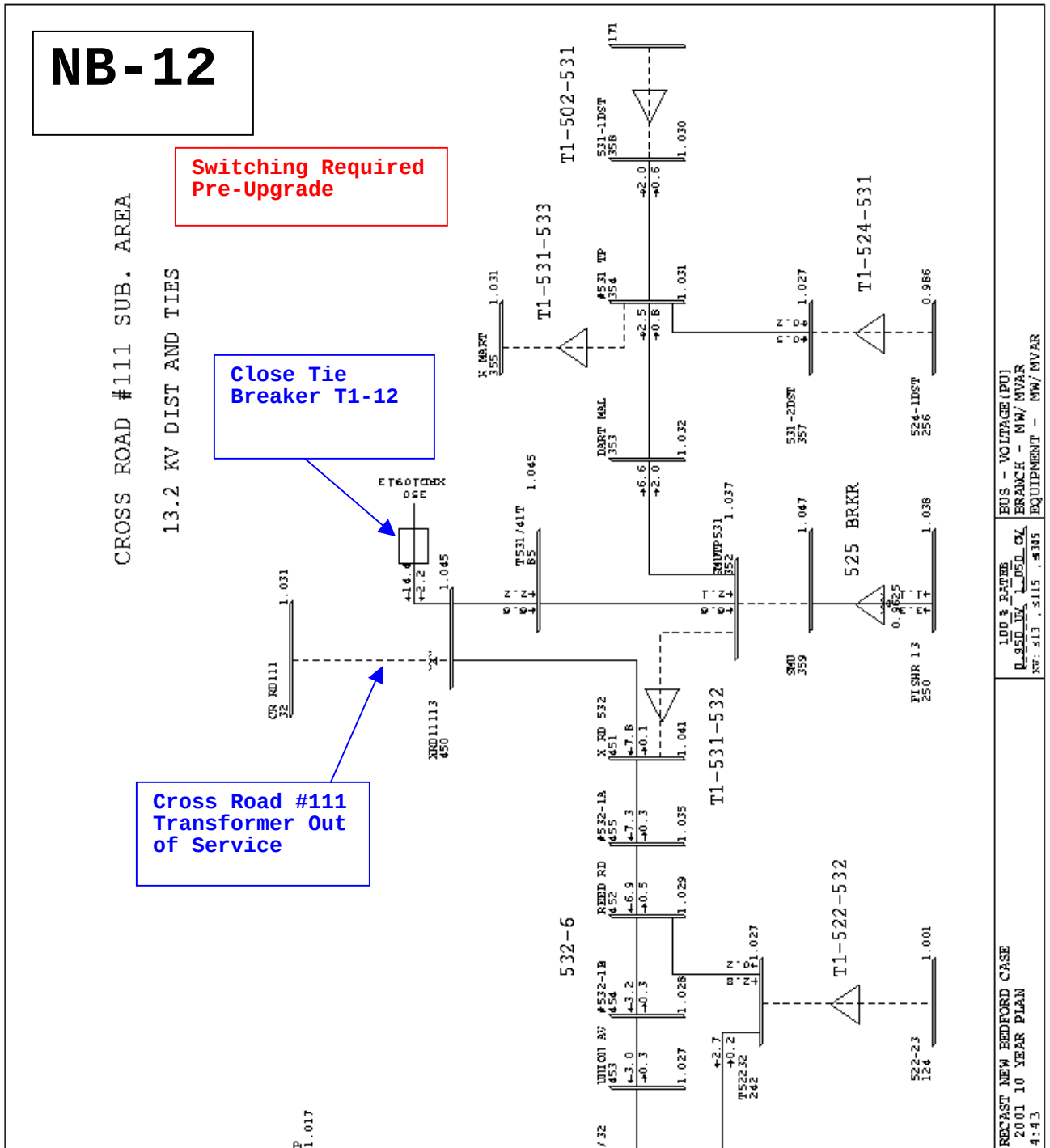

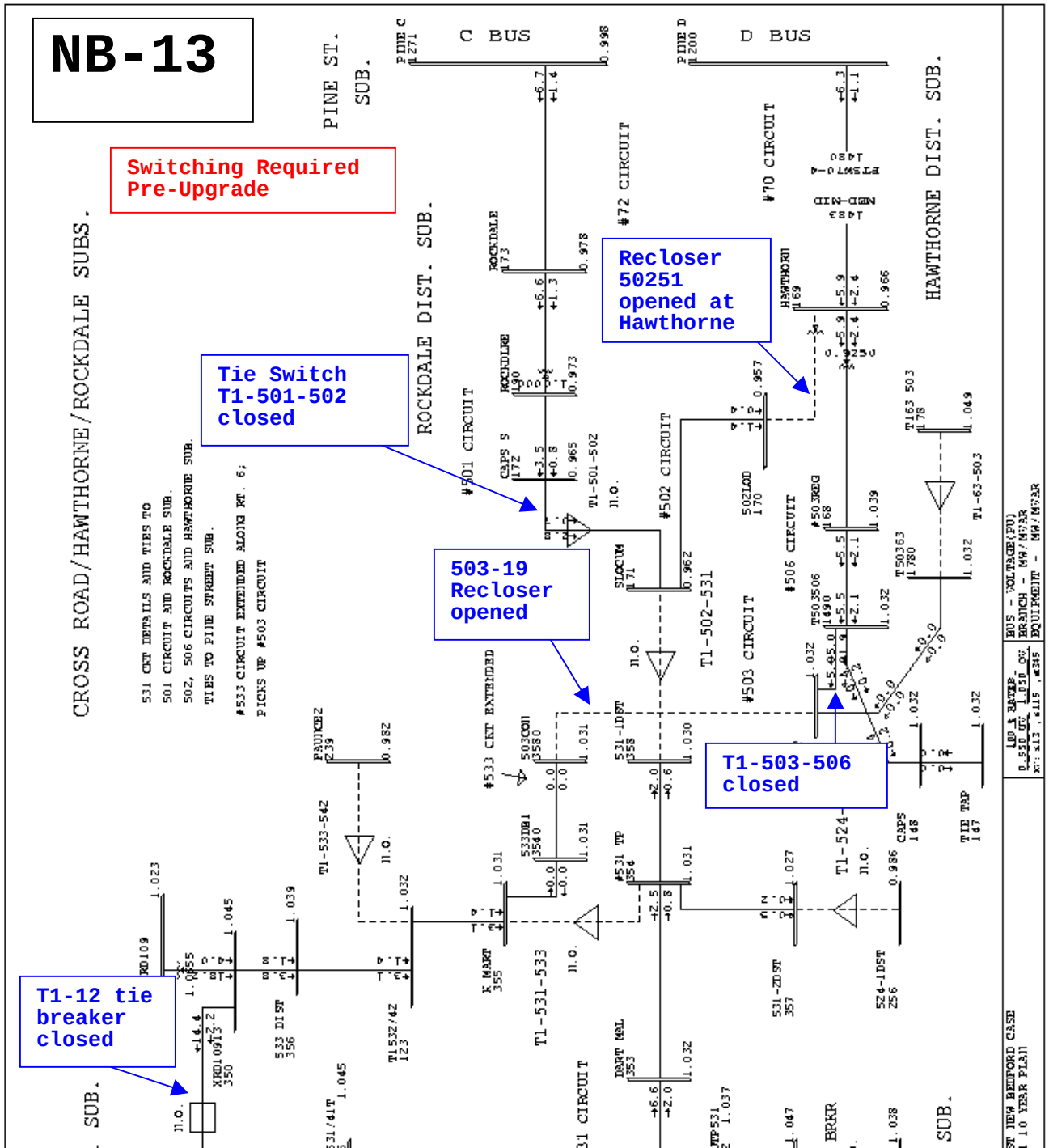
NB-13
Switching Required Pre-Upgrade
Tie Switch T1-501-502 closed
Recloser 50251 opened at Hawthorne
503-19 Recloser opened
T1-503-506 closed
T1-12 tie breaker closed
CROSS ROAD/HAWTHORNE/ROCKDALE SUBS.
PINE ST. SUB.
C BUS
D BUS
ROCKDALE DIST. SUB.
HAWTHORNE DIST. SUB.
#501 CIRCUIT
#502 CIRCUIT
#503 CIRCUIT
#506 CIRCUIT
#72 CIRCUIT
#70 CIRCUIT
T1-501-502
T1-502-531
T1-503-506
T1-533-542
T1-531-533
T1-524
T1-63-503
#533 CKT EXTENDED
531 CKT DETAILS AND TIES TO
501 CIRCUIT AND ROCKDALE SUB.
502, 506 CIRCUITS AND HAWTHORNE SUB.
TIES TO PINE STREET SUB.
#533 CIRCUIT EXTENDED ALONG RT. 6;
PICKS UP #503 CIRCUIT

NB-14

Switching Required Pre-Upgrade

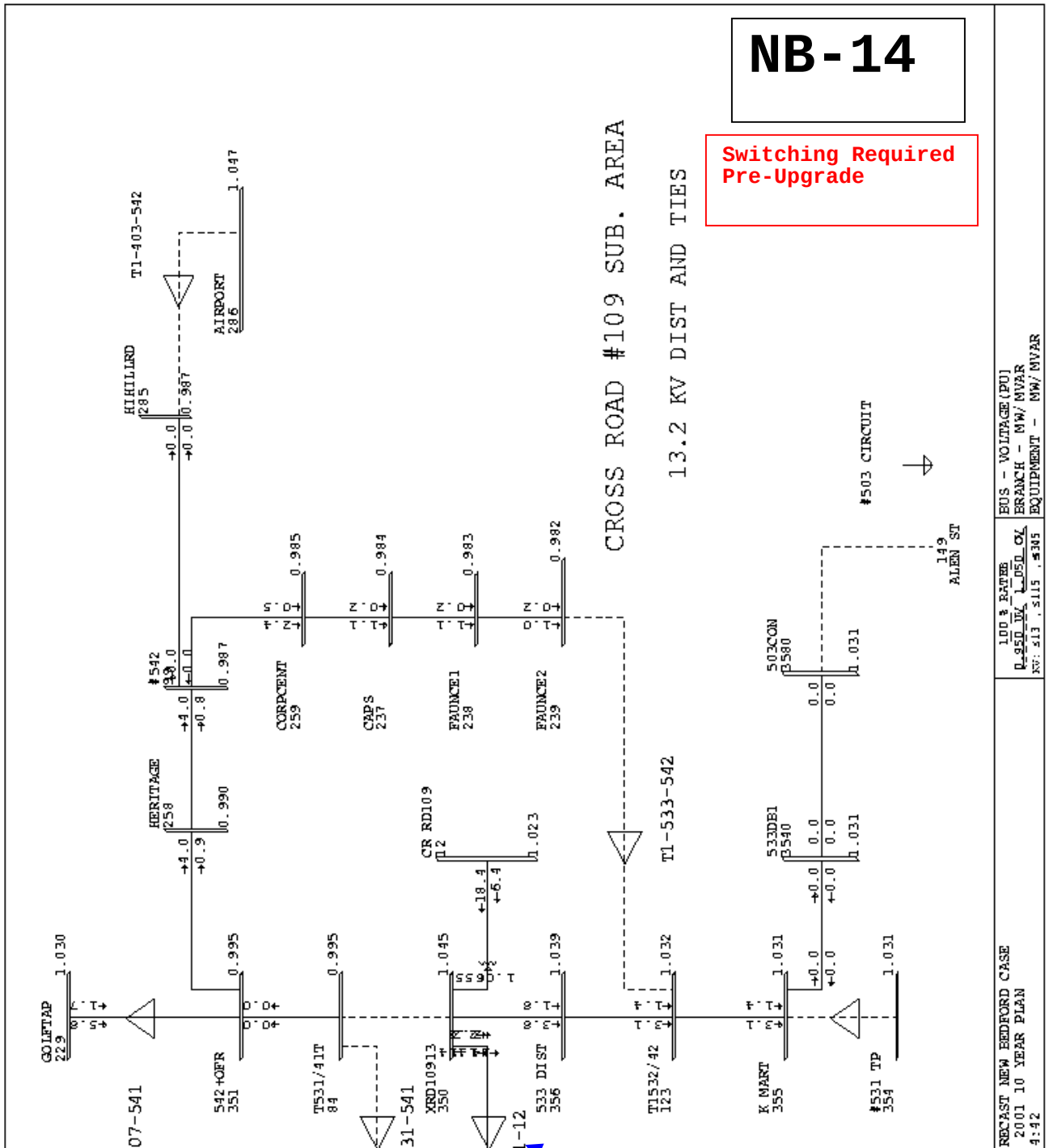

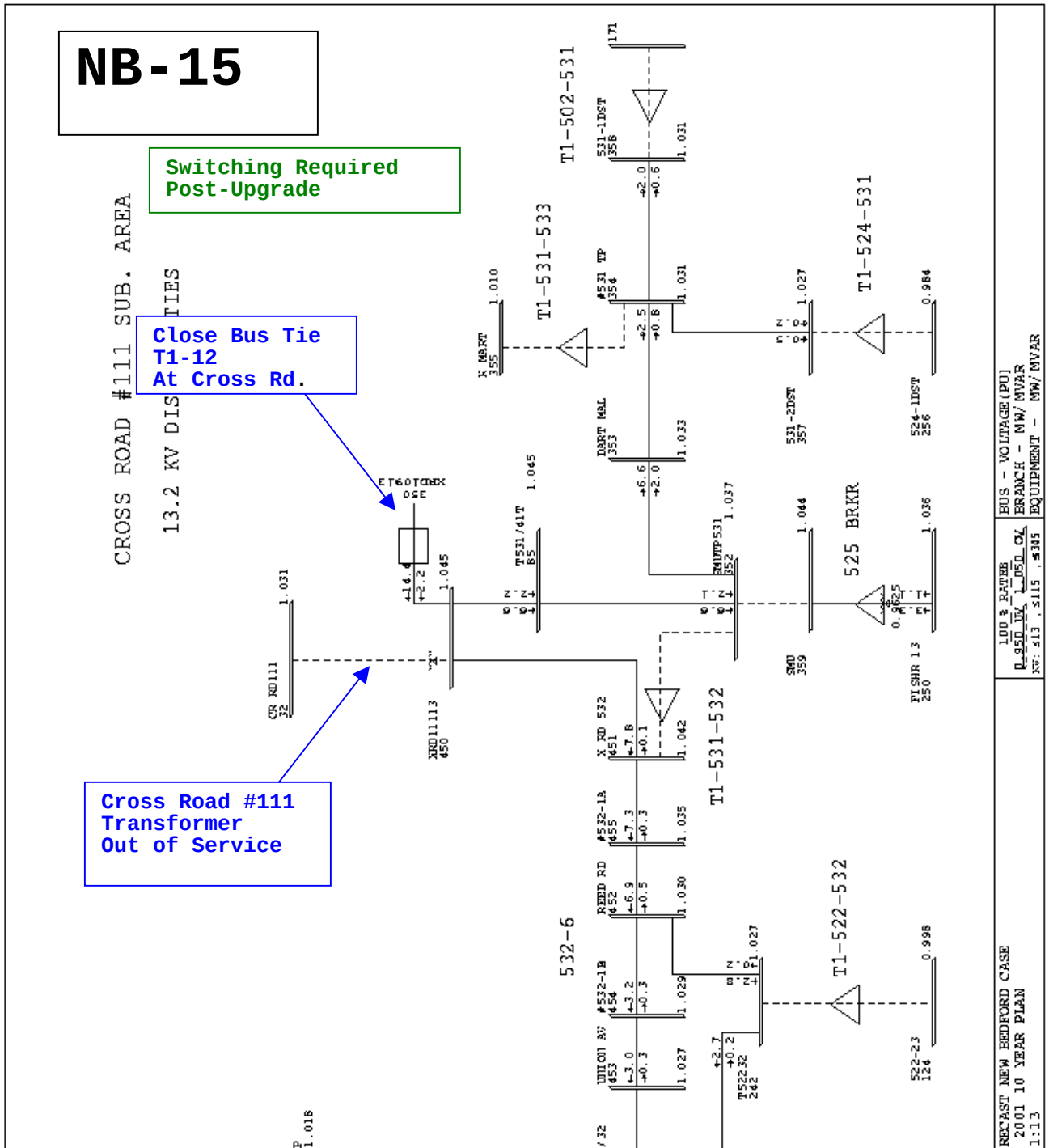
NB-15
Switching Required
Post-Upgrade
Close Bus Tie
T1-12
At Cross Rd.
Cross Road #111
Transformer
Out of Service
CROSS ROAD #111 SUB. AREA
13.2 KV DIS TIES
T1-502-531
T1-531-533
T1-524-531
T1-531-532
T1-522-532
525 BRKR
532-6
BUS - VOLTAGE(PU)
BRANCH - MW/MVAR
EQUIPMENT - MW/MVAR
FORECAST NEW BEDFORD CASE
2001 10 YEAR PLAN

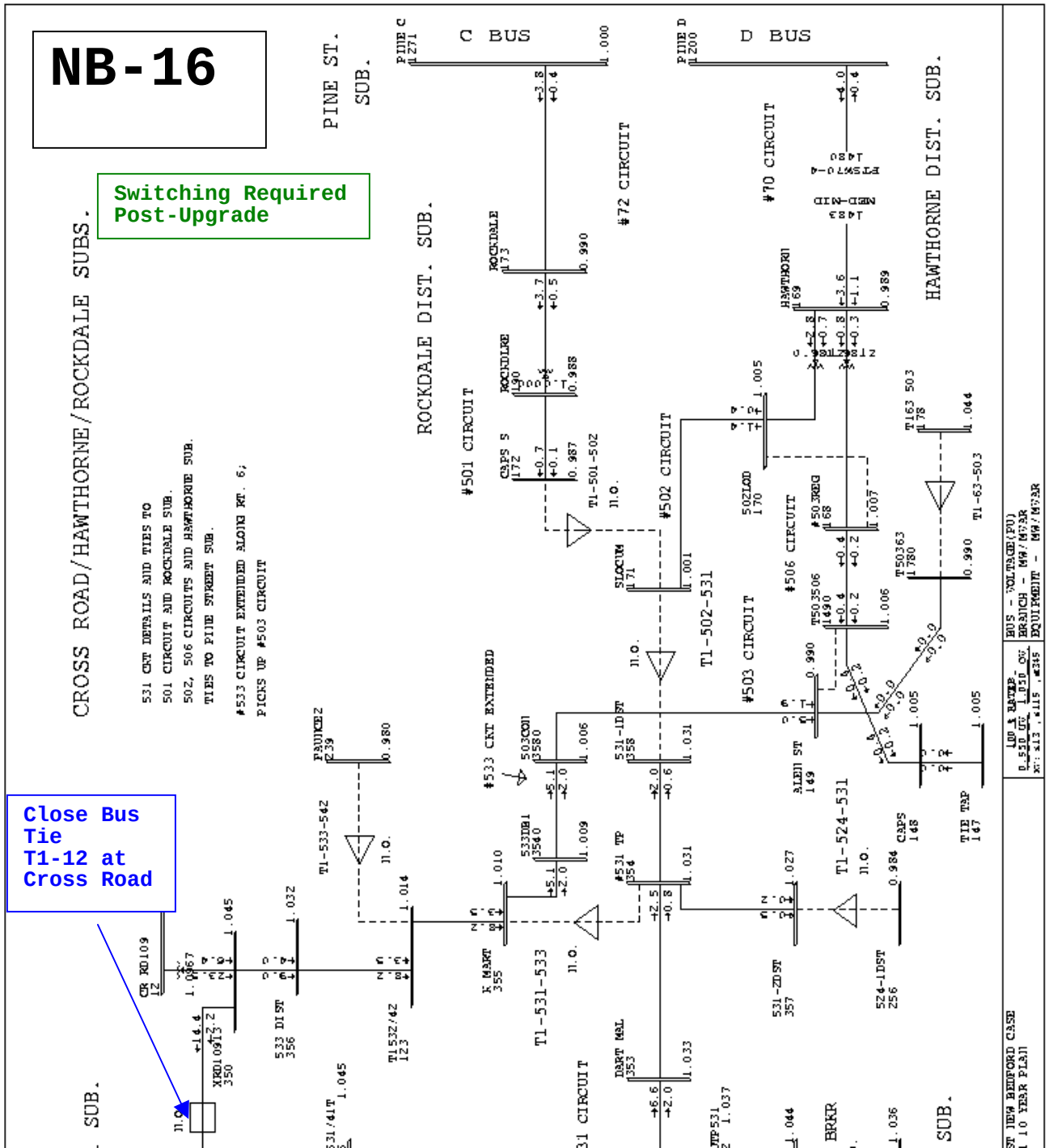
NB-16
Switching Required
Post-Upgrade
Close Bus
Tie
T1-12 at
Cross Road
CROSS ROAD/HAWTHORNE/ROCKDALE SUBS.
PINE ST.
SUB.
C BUS
D BUS
ROCKDALE DIST. SUB.
HAWTHORNE DIST. SUB.
#72 CIRCUIT
#70 CIRCUIT
#501 CIRCUIT
#502 CIRCUIT
#503 CIRCUIT
#506 CIRCUIT
T1-501-502
T1-502-531
T1-531-533
T1-524-531
T1-533-542
T1-63-503
#533 CKT EXTENDED
531 CKT DETAILS AND TIES TO
501 CIRCUIT AND ROCKDALE SUB.
502, 506 CIRCUITS AND HAWTHORNE SUB.
TIES TO PINE STREET SUB.
#533 CIRCUIT EXTENDED ALONG RT. 6;
PICKS UP #503 CIRCUIT

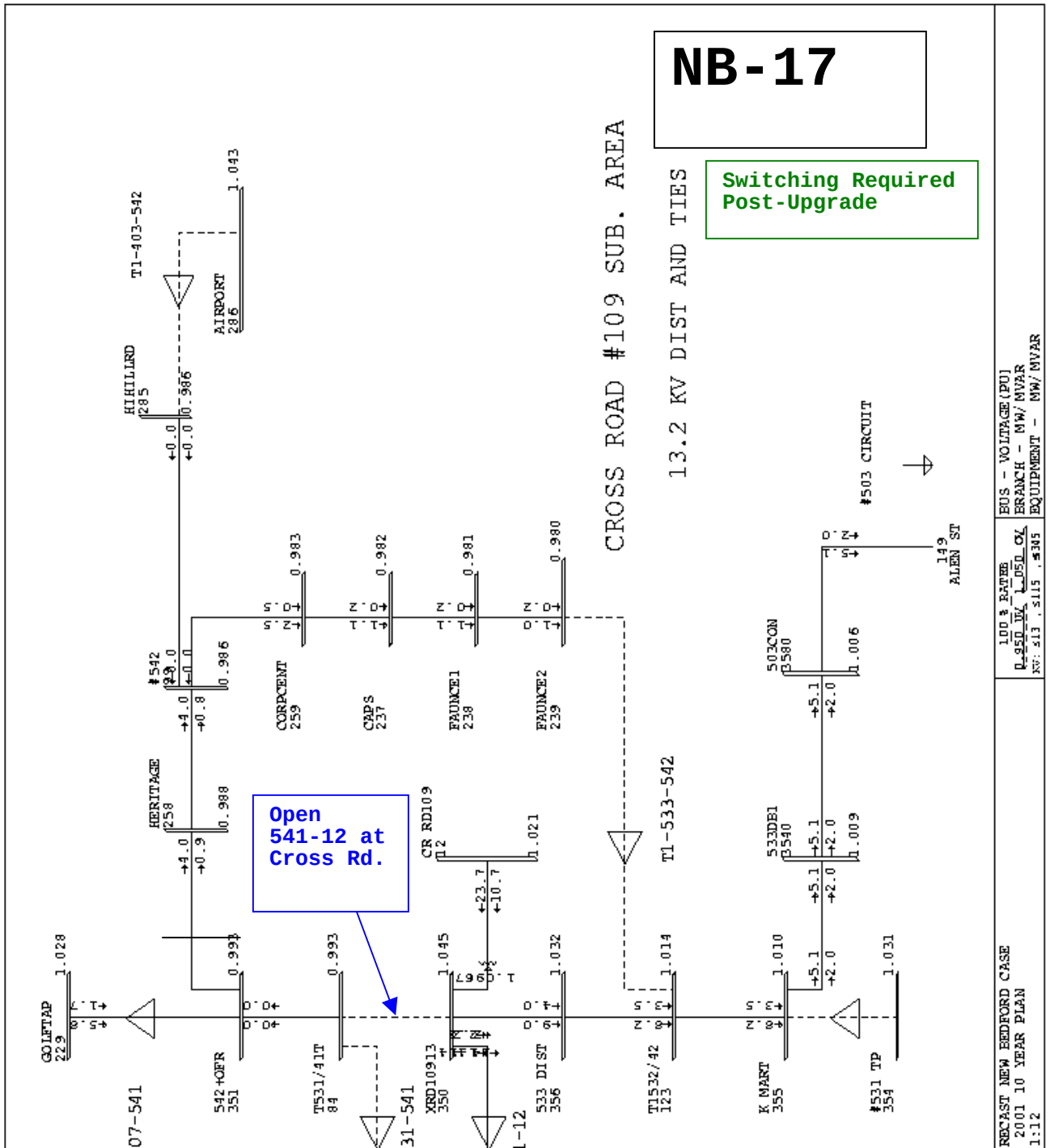
NB-17
Switching Required
Post-Upgrade
CROSS ROAD #109 SUB. AREA
13.2 KV DIST AND TIES
Open
541-12 at
Cross Rd.
T1-403-542
AIRPORT
286
HIHILLRD
285
#542
HERITAGE
258
CORPCENT
259
CAPS
237
FAUNCE1
238
FAUNCE2
239
CR RD109
12
T1-533-542
#503 CIRCUIT
149
ALEN ST
503CON
3580
533DB1
3540
GOLFTAP
229
542+OFR
351
T531/41T
84
XRD10913
350
533 DIST
356
T1532/42
123
K MART
355
#531 TP
354
07-541
31-541
1-12
BUS - VOLTAGE(PU)
BRANCH - MW/MVAR
EQUIPMENT - MW/MVAR
100 % RATEB
RECAST NEW BEDFORD CASE
2001 10 YEAR PLAN
1:12

BULK SUBSTATION DSS LINE SINGLE-CONTINGENCY ANALYSIS

Coincident Feeder peaks at Forecasted Summer 2002 District Peaks
Switching Sequences and Effects of Load Transfer Under Coincident Peak Conditions

CIRCUIT NUMBER	COINCIDENT PEAK LOAD (MW)	(MVA)	NUMBER CUSTOMERS	BACKUP CIRCUIT	BACKUP STATION	SWITCHING ACTIONS	BACKUP CKT. LOAD (BEFORE) (MW)	(MVA)	(AFTER) (MW)	(MVA)	SCADA ALARM (MVA)	PROBLEM AREAS
Cross Road Substation												
531	6.6	7.0	643	525	Fisher Rd.	CLOSE T1-525-531	3.3	3.5	9.9	10.4	17.5	Fisher Rd. Transformer Load to
						OPEN 53112						24.9 MVA, 108% > 12 MVA SCADA Alarm,
												but 95% of Transformer LTE Rating.
532	7.8	7.8	2603	531	Cross Rd 111	CLOSE T1-531-532	6.6	7.0	14.5	14.7	17.5	Note: Prior practice of backup via Fisher
						OPEN 53212						Road #522 Circuit No Longer Recommended
533	9.1	10.0	3239	531	CrossRd 111	CLOSE T1-531-533	6.6	7.0	10.4	11.2	17.5	
				506 (70)	Pine Street	Open 53312	4.0	4.0	6.3	6.4	7.2	
				501 (72)	Pine Street	Open 50319	3.8	3.8	6.7	6.8	6.5*	#72 Circuit flow 5% > 6.5 MVA SCADA
						Close T1-503-506						Alarm Limit
						Open 50251						
						Close T1-501-502						
541	5.8	6.0	1246	107	Indpark 111	CLOSE T1-107-541	4.2	4.3	10.1	10.5	10.3	#107 Circuit flow 2% > 10.3 MVA SCADA
						OPEN 54112						Alarm Limit

2003 T&D OPERATING STUDY
NEW BEDFORD DISTRICT

CRYSTAL SPRING TRANSFORMER OUTAGE CONTINGENCY

General Electric 12/16/20 MVA Transformer

Overload Ratings:

Summer Normal	23 MVA
Summer Emergency	25 MVA
Winter Normal	27 MVA
Winter Emergency	29 MVA

Switching Actions:

Open: Circuit Switcher 11462
Main Circuit Breaker 114B62

Close: Tie Switch T1-221-301

Results:

The #221 circuit at Arsene Street is used to pick up the entire Crystal Spring substation load by backfeeding through the Crystal Spring 13.2kV bus. Under the tied condition, 221 circuit load is 15.3 MVA. Cable limit on 221 circuit getaway in 900 Amps (20.6 MVA). Refer to **Diagrams NB-19 and NB-20.**

Loading	No heavy loading conditions were identified.
Voltage	No low voltage conditions were identified.

Additional Actions Required:

None

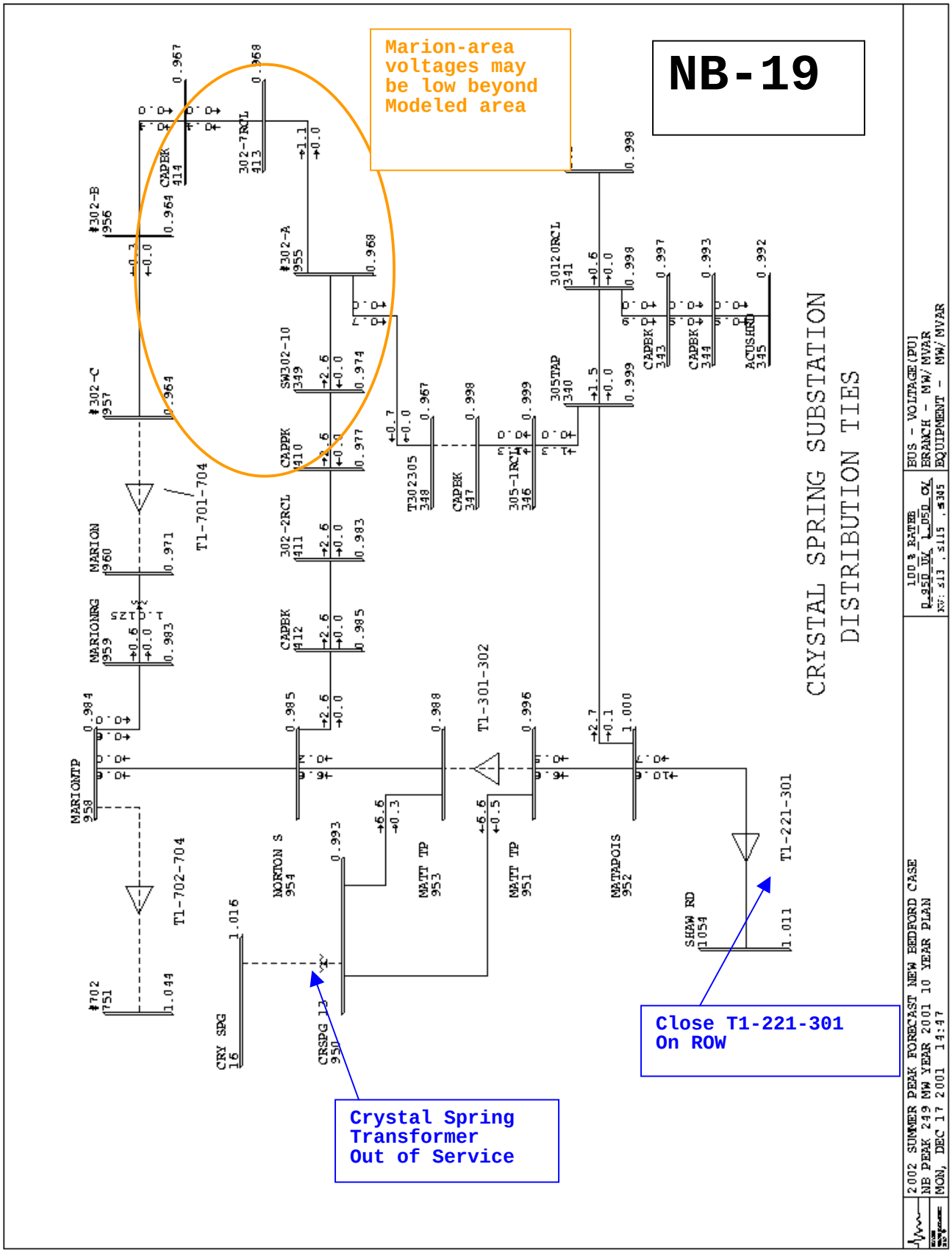
NB-19
Marion-area voltages may be low beyond Modeled area
CRYSTAL SPRING SUBSTATION DISTRIBUTION TIES
Close T1-221-301 On ROW
Crystal Spring Transformer Out of Service
T1-701-704
T1-702-704
T1-301-302
T1-221-301
MARION 960
MARIONRG 959
MARIONTP 958
#302-B 956
#302-C 957
#302-A 955
#702 751
CAPBK 414
302-7RCL 413
SW302-10 349
CAPPK 410
302-2RCL 411
CAPBK 412
T302305 348
CAPBK 347
305-1RCL 346
305TAP 340
30120RCL 341
CAPBK 343
CAPBK 344
ACUSHRD 345
NORTON S 954
MATT TP 953
MATT TP 951
MATAPOIS 952
SHAW RD 1054
CRY SPG 16
CRSPG 13 950
2002 SUMMER PEAK FORECAST NEW BEDFORD CASE
NB PEAK 249 MW YEAR 2001 10 YEAR PLAN
MON, DEC 17 2001 14:47
BUS - VOLTAGE(PU)
BRANCH - MW/MVAR
EQUIPMENT - MW/MVAR

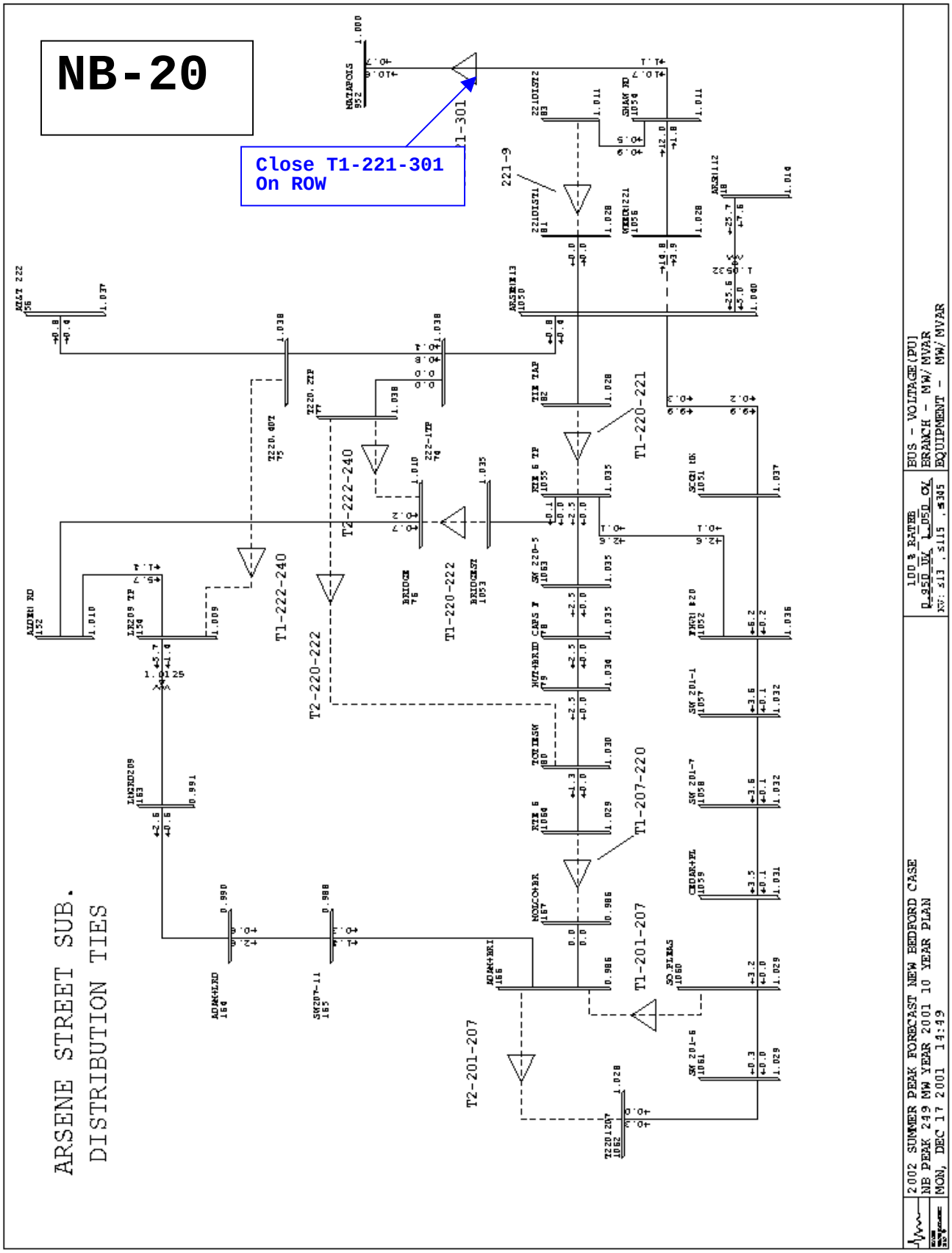
NB-20
Close T1-221-301
On ROW
ARSENE STREET SUB.
DISTRIBUTION TIES
T1-221-301
T1-220-221
T2-222-240
T1-222-240
T2-220-222
T1-220-222
T1-207-220
T1-201-207
T2-201-207
2002 SUMMER PEAK FORECAST NEW BEDFORD CASE
NB PEAK 249 MW YEAR 2001 10 YEAR PLAN
MON, DEC 17 2001 14:49
BUS - VOLTAGE(PU)
BRANCH - MW/MVAR
EQUIPMENT - MW/MVAR

BULK SUBSTATION DSS LINE SINGLE-CONTINGENCY ANALYSIS

* Coincident Feeder peaks at Forecasted Summer 2002 District Peaks
* Switching Sequences and Effects of Load Transfer Under Coincident Peak Conditions

CIRCUIT NUMBER	COINCIDENT PEAK LOAD (MW)	(MVA)	NUMBER CUSTOMERS	BACKUP CIRCUIT	BACKUP STATION	SWITCHING ACTIONS	BACKUP CKT. LOAD (BEFORE) (MW)	(MVA)	(AFTER) (MW)	(MVA)	SCADA ALARM (MVA)	PROBLEM AREAS
Crystal Spring Substation												
301	4.0	4.0	2271	221	Arsene St.	CLOSE T1-221-301	4.0	4.6	8.0	8.4	17.5	
						OPEN 30162						Note: Rochester #114 Bank Cannot
												carry Crystal Spring #302 and
302	6.6	6.6	2468	702	Rochester 112	CLOSE T1-702-704	1.9	2.0	8.9	9.0	8.2	Rochester #702 loads.
						CLOSE T-52						#702 Circuit flow 9% > 8.2 MVA SCADA
						OPEN 30262						Alarm Limit
						OPEN 114B52						Rochester #112 Bank flow 12.4 MVA, 55%
												over SCADA Alarm, 78% of 16 MVA LTE

2003 T&D OPERATING STUDY
NEW BEDFORD DISTRICT

FISHER ROAD TRANSFORMER OUTAGE CONTINGENCY

RTE/ASEA 12/16/20 MVA Transformer

Overload Ratings:

Summer Normal	23 MVA
Summer Emergency	26 MVA
Winter Normal	31 MVA
Winter Emergency	33 MVA

Switching Actions:

Open: Circuit Switcher 10982
Main Circuit Breaker 109B82
Feeder Breaker #52572

Close: Main Circuit Breaker 109B72
Tie Switch #T1-525-531

Results:

Fisher Road Wagner Bank (10 MVA nameplate, 11/12 Summer normal and emergency overload ratings) loaded to 12.0 MVA (100% of 12 MVA top nameplate rating,). Main breaker trip setting is listed at 27 MVA. Reference **Diagram NB-21 through NB-23.**

Loading No heavy loading conditions were identified.

Voltage No low voltage conditions were identified.

Additional Actions Required:

None

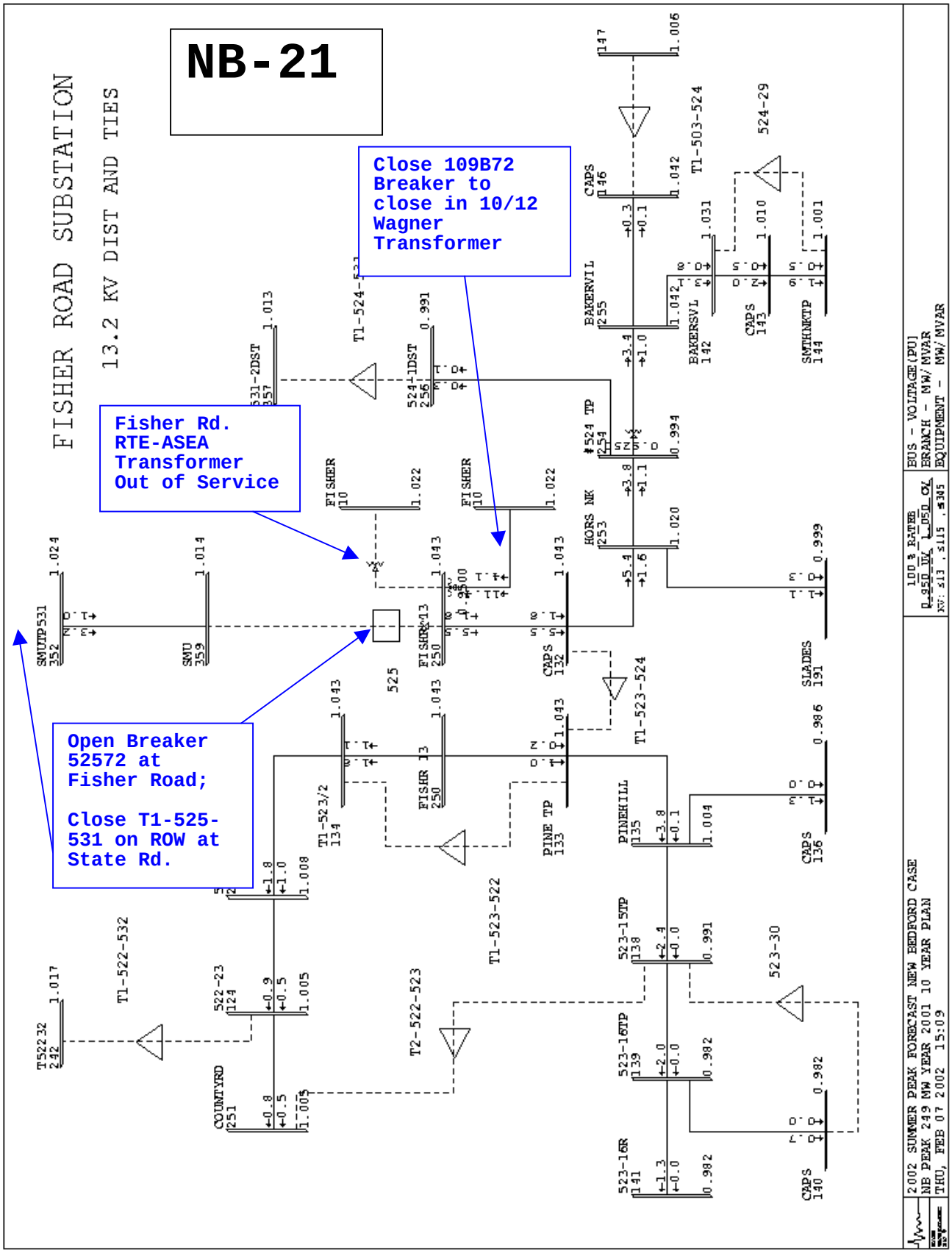
NB-21
FISHER ROAD SUBSTATION
13.2 KV DIST AND TIES
Close 109B72 Breaker to close in 10/12 Wagner Transformer
Fisher Rd. RTE-ASEA Transformer Out of Service
Open Breaker 52572 at Fisher Road;
Close T1-525-531 on ROW at State Rd.
2002 SUMMER PEAK FORECAST NEW BEDFORD CASE
NB PEAK 249 MW YEAR 2001 10 YEAR PLAN
THU, FEB 07 2002 15:09
BUS - VOLTAGE(PU)
BRANCH - MW/MVAR
EQUIPMENT - MW/MVAR

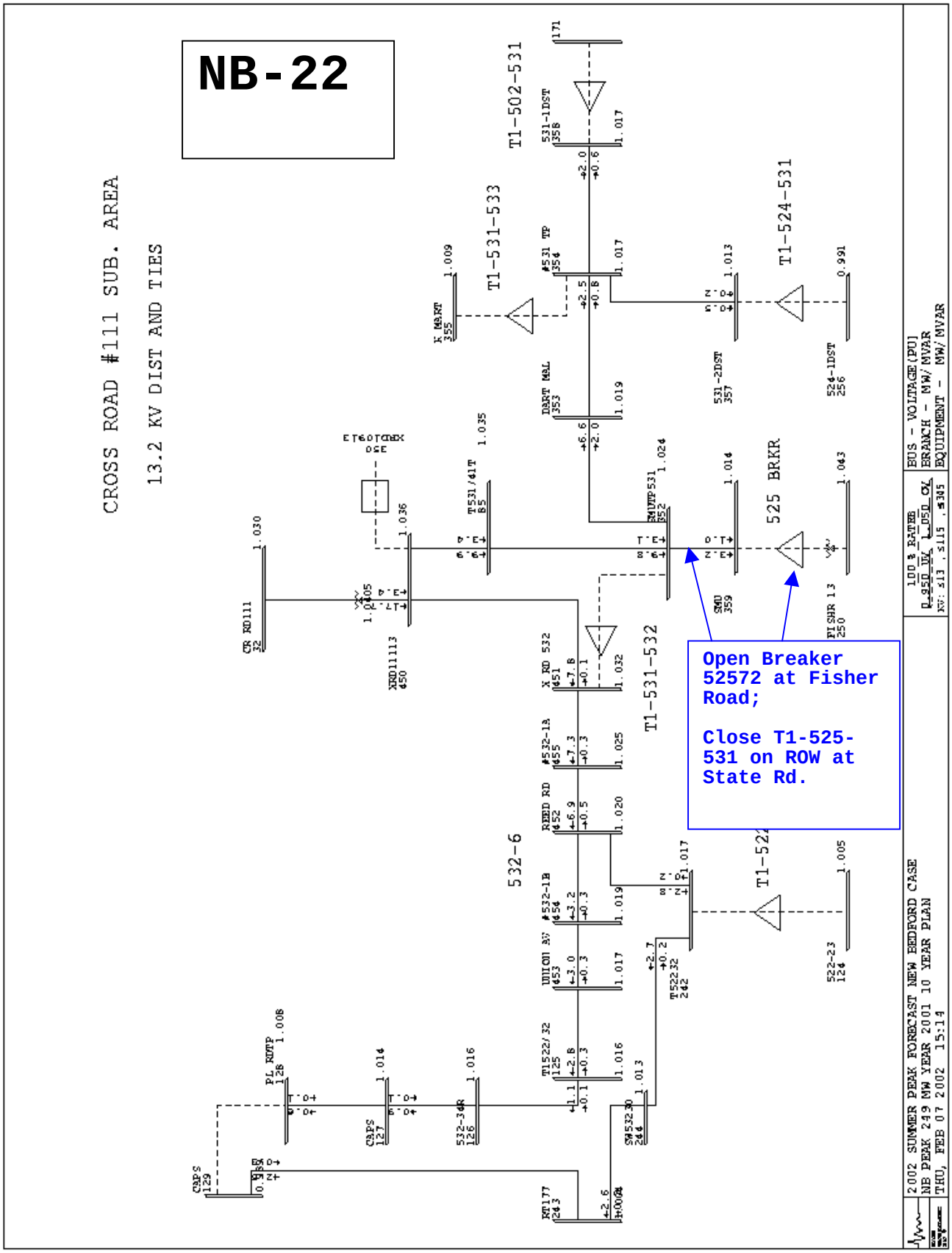
NB-22
CROSS ROAD #111 SUB. AREA
13.2 KV DIST AND TIES
T1-502-531
T1-531-533
T1-524-531
T1-531-532
525 BRKR
532-6
Open Breaker 52572 at Fisher Road;
Close T1-525-531 on ROW at State Rd.
2002 SUMMER PEAK FORECAST NEW BEDFORD CASE
NB PEAK 249 MW YEAR 2001 10 YEAR PLAN
THU, FEB 07 2002 15:14
BUS - VOLTAGE(PU)
BRANCH - MW/MVAR
EQUIPMENT - MW/MVAR

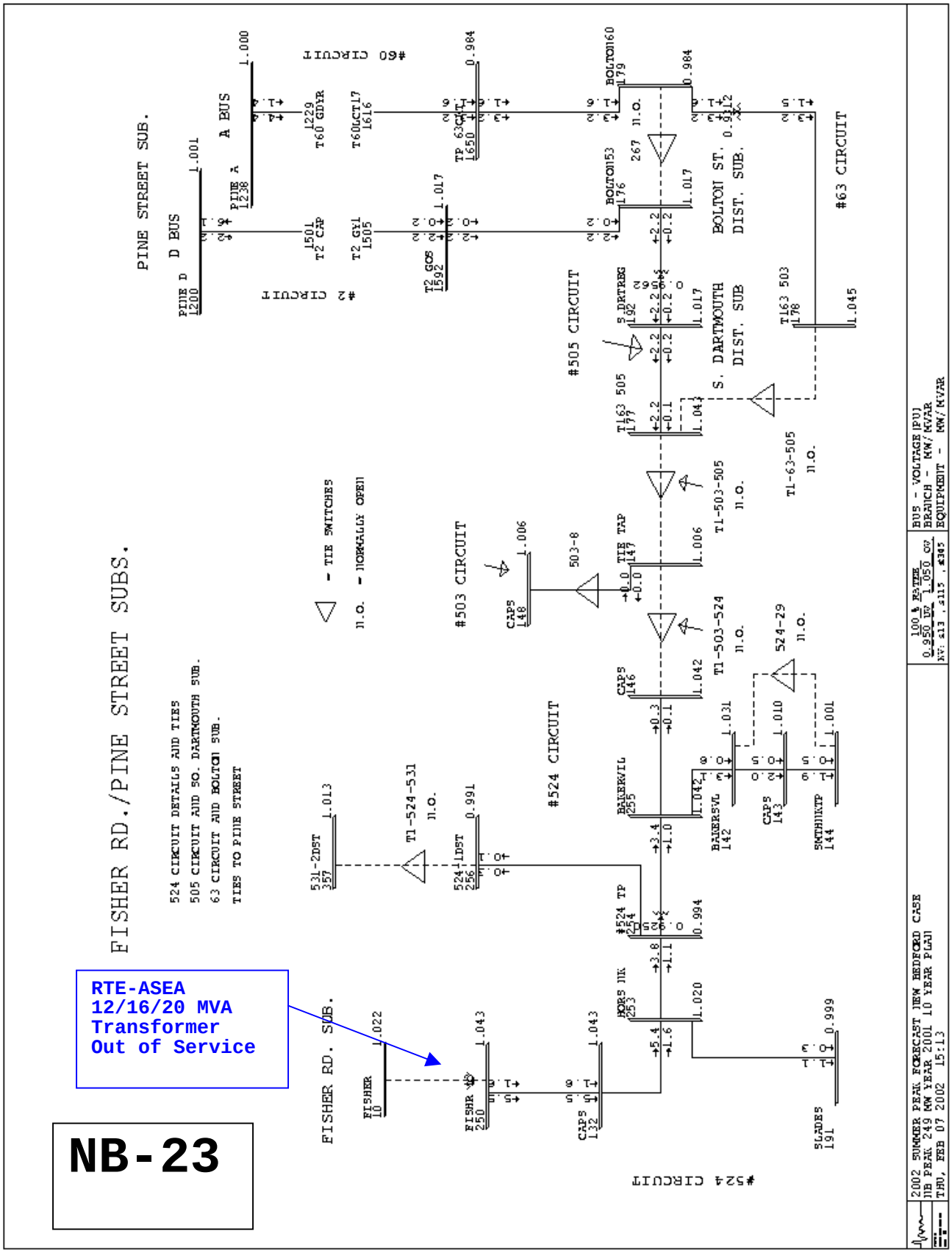
FISHER RD./PINE STREET SUBS.
524 CIRCUIT DETAILS AND TIES
505 CIRCUIT AND SO. DARTMOUTH SUB.
63 CIRCUIT AND BOLTON SUB.
TIES TO PINE STREET
- TIE SWITCHES
N.O. - NORMALLY OPEN
PINE STREET SUB.
D BUS
A BUS
#2 CIRCUIT
#60 CIRCUIT
#505 CIRCUIT
#503 CIRCUIT
#524 CIRCUIT
#63 CIRCUIT
BOLTON ST. DIST. SUB.
S. DARTMOUTH DIST. SUB
FISHER RD. SUB.
RTE-ASEA
12/16/20 MVA
Transformer
Out of Service
NB-23
2002 SUMMER PEAK FORECAST NEW BEDFORD CASE
NB PEAK 249 MW YEAR 2001 10 YEAR PLAN
THU, FEB 07 2002 15:13
BUS - VOLTAGE (PU)
BRANCH - MW/MVAR
EQUIPMENT - MW/MVAR

BULK SUBSTATION DSS LINE SINGLE-CONTINGENCY ANALYSIS

Coincident Feeder peaks at Forecasted Summer 2002 District
Switching Sequences and Effects of Load Transfer Under Coincident Peak

CIRCUIT NUMBER	COINCIDENT PEAK LOAD (MW)	(MVA)	NUMBER CUSTOMERS	BACKUP CIRCUIT	BACKUP STATION	SWITCHING ACTIONS	BACKUP CKT. LOAD (BEFORE) (MW)	(MVA)	(AFTER) (MW)	(MVA)	SCADA ALARM (MVA)	PROBLEM AREAS
Fisher Road												
522	1.8	2.1	874	532	CrossRd 111	CLOSE T1-522- OPEN	7.8	7.8	9.6	9.7	10.9	
523	4.0	4.0	2125	524	Fisher Rd.	CLOSE T1-523- OPEN	5.5	5.8	9.5	9.7	6.6 *	SCADA Alarm Limit Exceeded by 7.7 MVA trip setting
523	4.0	4.0	2125	532	CrossRd 111	CLOSE T2-522-	7.8	7.8	13.3	13.5	10.9	SCADA Alarm Limit Exceeded by 12.8 MVA trip setting
				522	Fisher Rd.	CLOSE T1-522- OPEN 522- OPEN	1.8	2.1	0.9	1.1	6.6	
524	5.5	5.8	2661	523	Fisher Rd.	CLOSE T1-523- OPEN	4.0	4.0	9.5	9.7	10.9	
524	5.5	5.8	2661	531	CrossRd 111	CLOSE T1-524-	6.6	7.0	8.6	9.1	17.5	Low voltages (>0.95pu) on 524
				506 (70)	Pine Street	CLOSE T1-506-	4.0	4.0	4.8	4.8	7.2	
				501 (72)	Pine Street	OPEN OPEN 524- CLOSE T1-501- OPEN 524-	3.8	3.8	6.7	6.8	6.5	#72 Circuit Flow 5% > 6.5 MVA Alarm
525	3.3	3.5	1	531	CrossRd 111	Close T1-531-525 Open 52572	6.6	7.0	9.9	10.5	17.5	525 Circuit Regulator to neutral and

2003 T&D OPERATING STUDY
NEW BEDFORD DISTRICT

INDUSTRIAL PARK #111 TRANSFORMER OUTAGE CONTINGENCY

ASEA 30/40/50 MVA Transformer

Overload Ratings:

Summer Normal	58 MVA
Summer Emergency	63 MVA
Winter Normal	68 MVA
Winter Emergency	73 MVA

Switching Actions:

Open: Circuit Switcher 11162
Main Circuit Breaker 111A62
Main Circuit Breaker 111C62

Close: A - B Bus Tie Breaker T1-62
Main Circuit Breaker 112C62

Results:

After closure of 13.2kV bus tie, #112 transformer carries full station load. Reference **Diagram NB-24.**

Loading	No heavy loading conditions were identified.
Voltage	No low voltage conditions were identified.

Additional Actions Required:

None

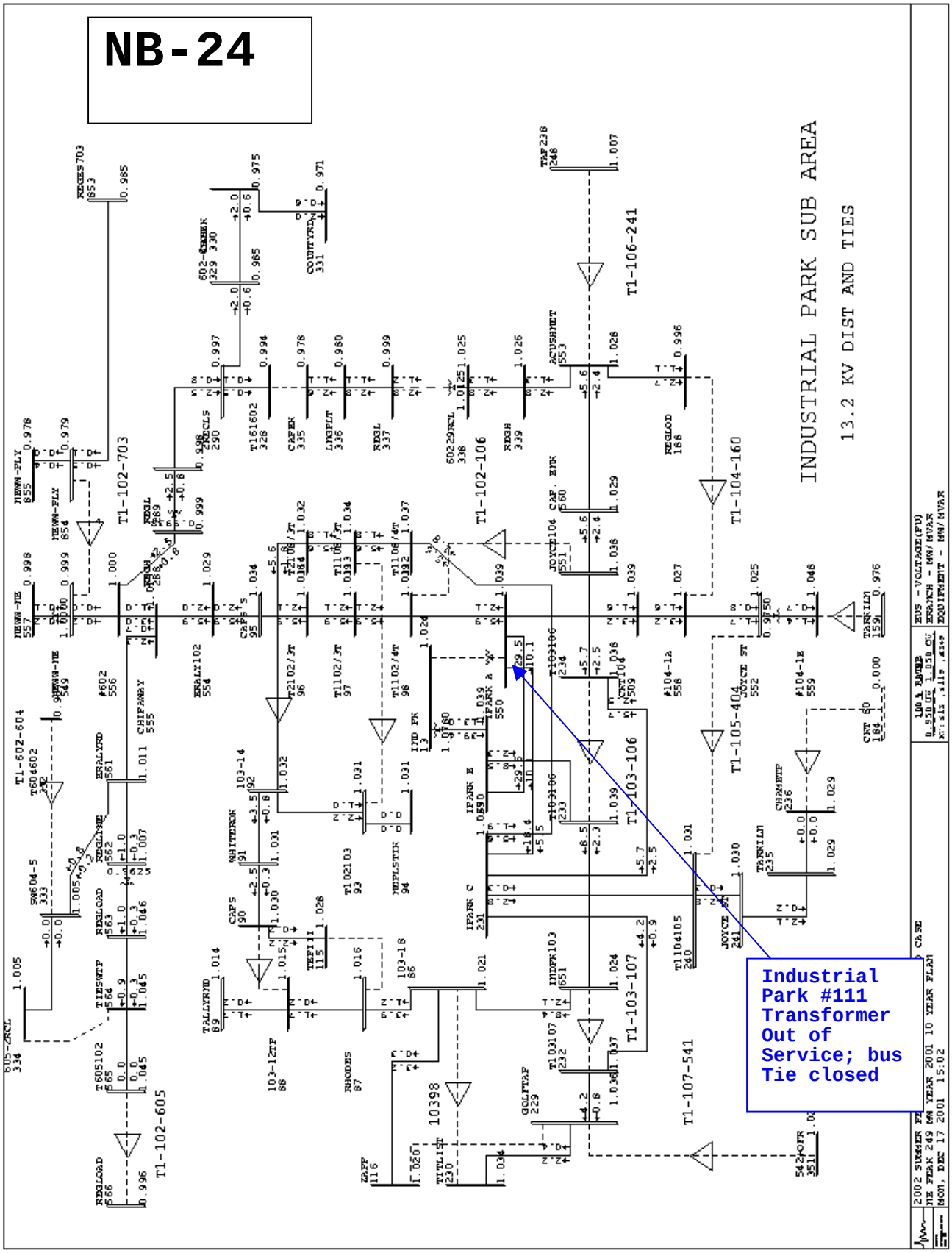
NB-24
INDUSTRIAL PARK SUB AREA
13.2 KV DIST AND TIES
T1-102-703
T1-102-106
T1-106-241
T1-104-160
T1-105-404
T1-103-106
T1-103-107
T1-107-541
T1-102-605
T1-602-604
Industrial Park #111 Transformer Out of Service; bus Tie closed

2003 T&D OPERATING STUDY
NEW BEDFORD DISTRICT

INDUSTRIAL PARK #112 TRANSFORMER OUTAGE CONTINGENCY

ASEA 30/40/50 MVA Transformer

Overload Ratings:

Summer Normal	64 MVA
Summer Emergency	69 MVA
Winter Normal	69 MVA
Winter Emergency	74 MVA

Switching Actions:

Open: Circuit Switcher 11262
Main Circuit Breaker 112B62

Close: A - B Bus Tie Breaker T1-62

Results:

After closure of 13.2kV bus tie, #111 transformer carries full station load. Reference **Diagram NB-25.**

Loading	No heavy loading conditions were identified.
Voltage	No low voltage conditions were identified.

Additional Actions Required:

None

NB-25

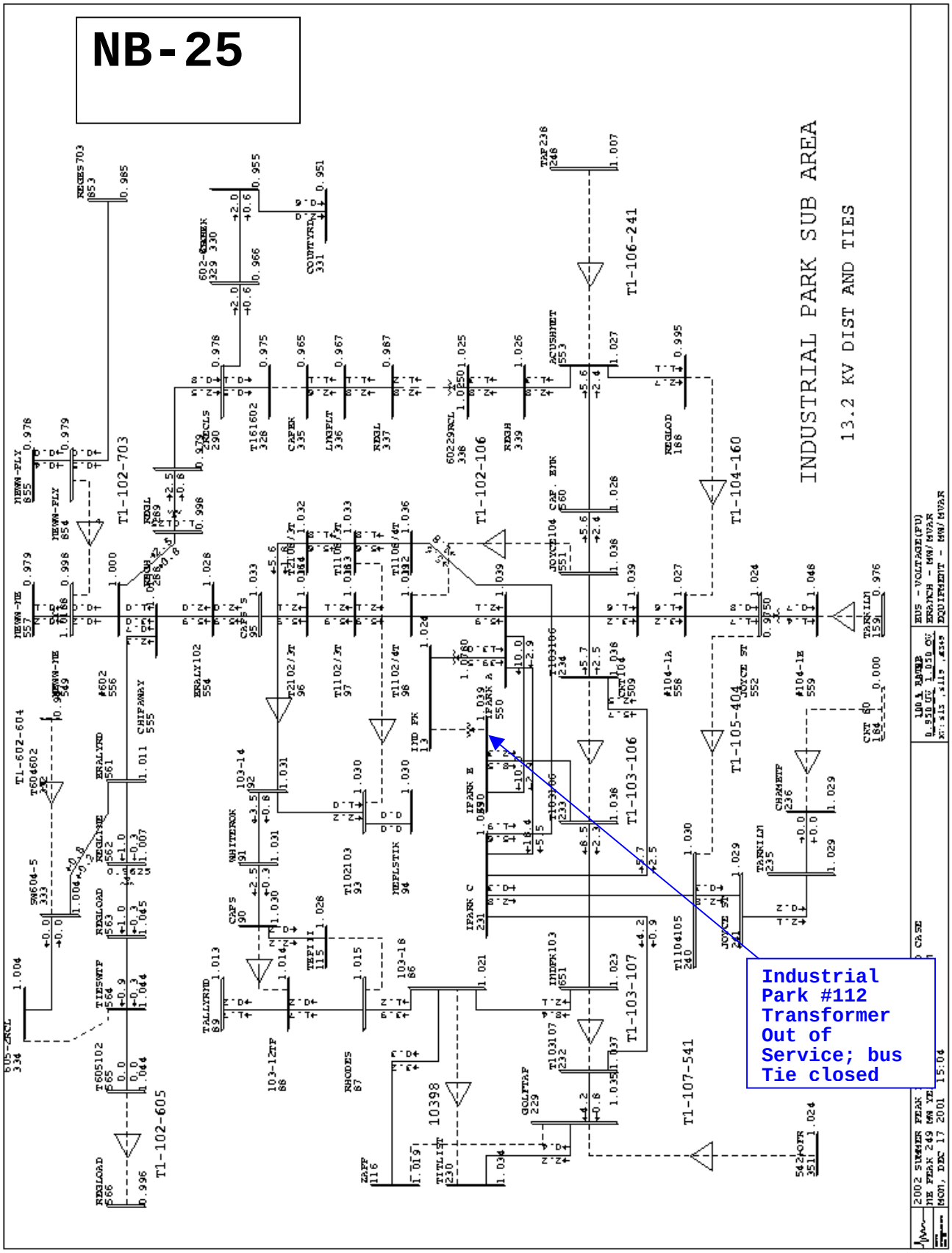
INDUSTRIAL PARK SUB AREA
13.2 KV DIST AND TIES
T1-102-703
T1-102-106
T1-106-241
T1-104-160
T1-105-404
T1-103-106
T1-103-107
T1-107-541
T1-102-605
T1-602-604
Industrial Park #112 Transformer Out of Service; bus Tie closed

BULK SUBSTATION DSS LINE SINGLE-CONTINGENCY ANALYSIS

Coincident Feeder peaks at Forecasted Summer 2002 District Peaks
Switching Sequences and Effects of Load Transfer Under Coincident Peak Conditions

CIRCUIT NUMBER	COINCIDENT PEAK LOAD (MW)	(MVA)	NUMBER CUSTOMERS	BACKUP CIRCUIT	BACKUP STATION	SWITCHING ACTIONS	BACKUP CKT. LOAD (BEFORE) (MW)	(MVA)	(AFTER) (MW)	(MVA)	SCADA ALARM (MVA)	PROBLEM AREAS
Industrial Park Substation												
101	5.6	5.9	New Circuit	103	Indpark 112	CLOSE T1-101-103	8.5	8.8	11.1	11.8	8.3*	SCADA Alarm Limit Exceeded by 42%, this
				107	Indpark 111	OPEN 10162	4.2	4.3	7.5	7.6	8.3	limit is set too low for 600 / 750 kcmil cable
						CLOSE 10788						
						OPEN 10388 (ZAPP)						
102	5.9	6.3	2778	106	Indpark 111	CLOSE T1-102-106	5.7	6.2	8.8	9.4	10.3	
				104	Indpark 111	CLOSE T1-104-160	3.2	3.6	6.0	6.7	8.3	
						OPEN 10262						
						OPEN 160-1 Recloser						
103	8.5	8.8	24	101	Indpark 111	CLOSE T1-101-103	4.2	4.3	10.9	11.6	?	SCADA Alarm Limit Not Known
				107	Indpark 111	OPEN 10362	4.2	4.3	7.5	7.6	8.3	
						CLOSE 10788						
						OPEN 10388 (ZAPP)						
104	3.2	3.6	1066	105	Indpark 111	CLOSE T1-104-105	4.6	4.6	7.9	8.3	10.3	Note: Church St. now on 105 Circuit
						OPEN 10462						
105	4.6	4.6	1992	104	Indpark 111	CLOSE T1-104-105	3.2	3.6	7.9	8.3	8.3	Note: Church St. now on 105 Circuit
						OPEN 10562						
106	5.7	6.2	2172	241	Wing Lane	CLOSE T1-106-241	5.7	5.9	8.7	9.3	13.0	
				104	Indpark 111	CLOSE T1-104-160	3.2	3.6	6.0	6.6	8.3	
						OPEN 10662						
						OPEN 160-1						
106	5.7	6.2	2172	102	Indpark 111	CLOSE T1-102-106	5.9	6.3	11.6	12.5	10.3	Note: Assumes 102 circuit cable getaway
						OPEN 10662						upgraded to 750 kcmil
107	4.2	4.3	4	103	Indpark 112	CLOSE T1-103-107	8.5	8.8	11.1	11.5	8.3 *	SCADA Alarm Limit Exceeded by 39%, this
				101	Indpark 111	CLOSE T1-101-103	5.6	5.9	7.3	7.6	?	limit is set too low for 600 / 750 kcmil cable
						OPEN 10762						#101 Ckt. SCADA Alarm Limit Not Known
						OPEN 103-38						

2003 T&D OPERATING STUDY
NEW BEDFORD DISTRICT

PINE STREET TRANSFORMER OUTAGE CONTINGENCY

FPE #114C 36/48/60 [67] MVA Transformer
General Electric #112E 36/48/60 [67] MVA Transformer
General Electric #114F 36/48/60 [67] MVA Transformer

Overload Ratings:

#112 GE Bank:

Summer Normal	75 MVA
Summer Emergency	82 MVA
Winter Normal	82 MVA
Winter Emergency	88 MVA

#114 GE Bank:

Summer Normal	72 MVA
Summer Emergency	79 MVA
Winter Normal	80 MVA
Winter Emergency	85 MVA

#114 FPE Bank:

Summer Normal	72 MVA
Summer Emergency	89 MVA
Winter Normal	80 MVA
Winter Emergency	85 MVA

Switching Actions:

GE Bank #112E:

Open: Motor-Operated Switch 112E07
Circuit Breaker 112A11
Circuit Breaker 112D11
Circuit Breaker 112C11

Close: Nothing

GE Bank #114F:

Open: Motor-Operated Switch 114F07
Circuit Breaker 114B11
Circuit Breaker 112A11
Circuit Breaker 112D11

Close: Nothing

FPE Bank #114C:

Open: Motor-Operated Switch 11417
Circuit Breaker BC11
Circuit Breaker CB11

Close: Nothing

Results:

Reference **Diagram NB-26.**

Loading	No heavy loading conditions were identified.
Voltage	No low voltage conditions were identified.

Additional Actions Required:

None

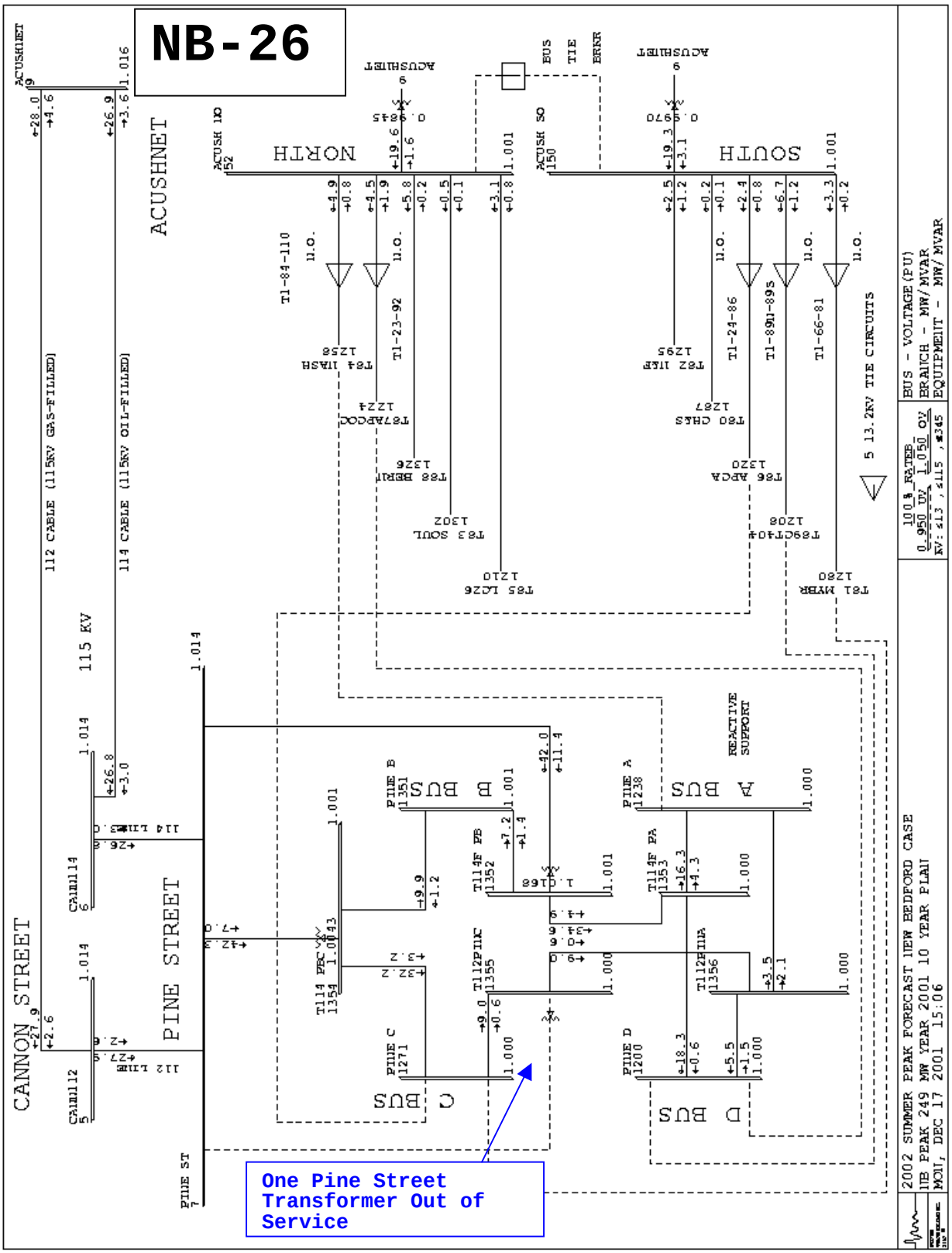
NB-26
One Pine Street Transformer Out of Service
ACUSHNET
NORTH
SOUTH
CANNON STREET
PINE STREET
115 KV
112 CABLE (115KV GAS-FILLED)
114 CABLE (115KV OIL-FILLED)
BUS TIE BRKR
5 13.2KV TIE CIRCUITS
REACTIVE SUPPORT
A BUS
B BUS
C BUS
D BUS
2002 SUMMER PEAK FORECAST NEW BEDFORD CASE
NB PEAK 249 MW YEAR 2001 10 YEAR PLAN
MON, DEC 17 2001 15:06
BUS - VOLTAGE(PU)
BRANCH - MW/MVAR
EQUIPMENT - MW/MVAR

PINE STREET DISTRIBUTION SUPPLY FEEDER CONTINGENCIES

* Coincident feeder peaks at Forecasted 2002 New Bedford District Peak
* Switching Sequences and Effects of Load Transfer Under Coincident Peak Conditions

CKT. NUMBER	PEAK LOAD (MW)	PEAK LOAD (MVA)	BACKUP CIRCUIT	SWITCHING ACTIONS	(BEFORE) (MW)	(BEFORE) (MVA)	(AFTER) (MW)	(AFTER) (MVA)	SCADA ALARM (MVA)	PROBLEM AREAS
Pine Street										
110	2.4	2.5	84	CLOSE T1-84-110 OPEN 11011	4.9	4.9	7.3	7.3	6.6*	Ckt 84 flow 11% over 6.6 MVA SCADA Alarm Limit
23	1.2	1.3	87	CLOSE T1-23-92 OPEN 2311	4.5	4.9	5.7	5.8	6.6	
8	3.6	3.8	81	CLOSE 827 OPEN 811	3.3	3.3	6.9	7.0	6.6 *	Ckt 81 Flow 6% over 6.6 MVA SCADA Alarm Limit
24	4.6	4.7	86	CLOSE T1-24-86 OPEN 2411	2.4	2.5	7.6	7.9	* 6.6	86 Ckt flow 20% over 6.6 MVA SCADA Alarm Limit
89S	2.3	2.4	89N	CLOSE T1-89N-89S OPEN 8911 CLOSE 8657 OPEN 8957	4.9	5.0	7.3	7.5	* 6.6	89N Ckt flow 14% over 6.6 MVA SCADA Alarm Limit Transfer Building 19 to #86 Circuit
66	3.5	4.0	81	CLOSE T1-66-81 OPEN 6611	3.3	3.3	6.8	7.1	6.6 *	Ckt 81 flow 8% over 6.6 MVA SCADA Alarm Limit
70	4.0	4.0	502 (72)	CLOSE T1-502-501 OPEN 7011	3.8	3.8	7.8	7.8	* 6.5	72 Ckt flow 20% over 6.5 MVA SCADA Alarm Limit
73	3.8	4.3	55	CLOSE T1-55-73 OPEN 7311	3.8	4.0	7.8	8.5	* 7.2	55 Ckt flow 18% over 7.2 MVA SCADA Alarm Limit
55	3.8	4.0	73	CLOSE T1-55-73 OPEN 5511	3.8	4.3	7.5	8.1	*6.8	73 Ckt flow 19% over 6.8 MVA SCADA Alarm Limit
59	4.7	5.0	72 502 (70)	CLOSE T1-59-72 OPEN 5911 CLOSE T1-501-502 OPEN 50181 AT ROCKDALE	3.8 4.0	3.8 4.0	7.8 4.7	8.2 4.7	* 6.5 7.2	72 Ckt flow 26% over 6.5 MVA SCADA Alarm Limit; 9781' of 500 kcmil cable at 100% of 8 MVA Normal rating
71	3.6	3.8	3	CLOSE 335 OPEN 7135 OPEN 7111	3.6	4.1	7.2	8.0	* 6.6	3 Ckt flow 21% over 6.6 MVA SCADA Alarm Limit

PINE STREET DISTRIBUTION SUPPLY FEEDER CONTINGENCIES

* Coincident Feeder peaks at Forecasted 2002 New Bedford District Peak
* Switching Sequences and Effects of Load Transfer Under Coincident Peak Conditions

CKT. NUMBER	COINCIDENT PEAK LOAD (MW)	COINCIDENT PEAK LOAD (MVA)	BACKUP CIRCUIT	SWITCHING ACTIONS	BACKUP CKT. LOAD (BEFORE) (MW)	BACKUP CKT. LOAD (BEFORE) (MVA)	BACKUP CKT. LOAD (AFTER) (MW)	BACKUP CKT. LOAD (AFTER) (MVA)	SCADA ALARM (MVA)	PROBLEM AREAS
(Pine Street Buses, Cont'd)										
72	3.8	3.8	59	CLOSE T1-59-72	4.7	5.0	7.5	7.8	* 6.4	59 Ckt flow 22% over 6.4 MVA
			71	OPEN 7211	3.6	3.8	4.6	4.9	5.1	SCADA Alarm Limit
				CLOSE 7127						N.B. High School must be transferred
				OPEN 5927						to #71 Circuit.
3	3.6	4.1	21	CLOSE 2167	1.6	1.7	5.2	5.8	6.6	
				OPEN 311						
21	1.6	1.7	3	CLOSE 2167	3.6	4.1	5.2	5.9	6.6	
				OPEN 2111						
5	2.4	2.6	NONE	OPEN 511	0.0	0.0	0.0	0.0	X	Three secondary network units
										(#2, #5, #6) Out of Service.
67	3.7	3.7	89S	CLOSE 8927	2.3	2.4	6.0	6.2	6.6	
				OPEN 6711						
25	3.2	3.2	7	CLOSE T1-7-25	3	3.0	6.2	6.2	6.6	
				OPEN 2511						
53	2.1	2.3	60	CLOSE 6057	4.4	4.6	6.4	6.9	* 5.1	60 Ckt flow 35% over 5.1 MVA
				OPEN 5311						SCADA Alarm Limit
2	2.2	6.5	60	CLOSE 267	4.4	4.6	6.6	6.8	6.6	60 Ckt flow 3% over 6.6 MVA SCADA
		(CAPACITOR)		OPEN 211						Alarm Limit; 698 feet of 300 KCMIL
				OPEN 2C02						Cable Overloaded between Bonney St.
										LC #17, 1% > 6.8 MVA LTE
60	4.4	4.6	2	CLOSE 267	2.2	6.5	6.6	6.8	6.6	60 Ckt flow 3% over 6.6 MVA SCADA
				OPEN 6011						Alarm Limit; #2 Capacitor must be
				OPEN 2C02						switched out of service
6	2.7	2.9	60	CLOSE 6046	4.4	4.6	3.8	3.9	6.6	#60 Circuit is used to back up #6 Circuit;
			2	OPEN 611	2.2	6.5	5.5	6.8	* 6.6	Bolton Sub #63 Circuit must be transferre
				OPEN 6047						to #2 Circuit to prevent overload of
				CLOSE 267						698' of 300 MCM Cu cable; #2 Ckt flow
										3% over 6.6 MVA SCADA Alarm

PINE STREET DISTRIBUTION SUPPLY FEEDER CONTINGENCIES

* Coincident Feeder peaks at Forecasted 2002 New Bedford District Peak
* Switching Sequences and Effects of Load Transfer Under Coincident Peak Conditions

CKT. NUMBER	COINCIDENT PEAK LOAD (MW)	COINCIDENT PEAK LOAD (MVA)	BACKUP CIRCUIT	SWITCHING ACTIONS	BACKUP CKT. LOAD (BEFORE) (MW)	BACKUP CKT. LOAD (BEFORE) (MVA)	BACKUP CKT. LOAD (AFTER) (MW)	BACKUP CKT. LOAD (AFTER) (MVA)	SCADA ALARM (MVA)	PROBLEM AREAS
(Pine Street Buses, Cont'd)										
54	2.5	2.5	4	CLOSE T1-4-54 OPEN 5411	1.5	1.6	3.9	4.1	6.6	
4	1.5	1.6	54	CLOSE T1-5-54 OPEN 411	2.5	2.5	4.0	4.2	4.3	218 feet of #2 Cu Cable overloaded 4% over 3 MVA LTE rating Grit Sub.
7	3.0	3.0	25	CLOSE T1-7-25 OPEN 711	3.2	3.2	6.3	6.3	6.6	
62	1.1	1.9	69	CLOSE 6947 OPEN 6211	2.6	2.7	3.7	4.4	6.6	
69	2.6	2.7	62	CLOSE 6947 OPEN 6911	1.1	1.9	3.7	4.4	6.6	
97	1.4	1.4	98	CLOSE K9798T1 OPEN 9711	1.4	1.4	2.8	2.8	N/A	SCADA Alarm Setting Not Known
98	1.4	1.4	97	CLOSE K9798T1 OPEN 9811	1.4	1.4	2.8	2.8	N/A	SCADA Alarm Setting Not Known

BULK SUBSTATION DSS LINE SINGLE-CONTINGENCY ANALYSIS

Coincident Feeder peaks at Forecasted Summer 2002 District Peaks
Switching Sequences and Effects of Load Transfer Under Coincident Peak Conditions

CIRCUIT NUMBER	COINCIDENT PEAK LOAD (MW)	(MVA)	NUMBER CUSTOMERS	BACKUP CIRCUIT	BACKUP STATION	SWITCHING ACTIONS	BACKUP CKT. LOAD (BEFORE) (MW)	(MVA)	(AFTER) (MW)	(MVA)	SCADA ALARM (MVA)	PROBLEM AREAS
New Bedford Area LCU's												
South Dartmouth Sub. - #505 Circuit												
							SWITCHING OPTION #1					
505	2.2	2.2	1353	63 (60)	BOLTON(PINE)	CLOSE T1-63-505	4.4	4.6	6.6	6.8	6.6	#63 Ckt. flow 5.8 MVA, Bolton 221A
						OPEN 50522						regulator overloaded at 15% over
												4.6 MVA (202A) Rating
							SWITCHING OPTION #2					
505	2.2	2.2	1353	524	Fisher Rd.	CLOSE T1-506-505	5.5	5.8	8.1	8.5	9.1	
						CLOSE T1-506-524						
						OPEN 506-8						
Bolton Sub. - #63 Circuit												
							SWITCHING OPTION #1					Note: Pre Circuit 63 / 65 split project
63	3.2	3.6	1796	505 (2)		CLOSE T1-63-505	2.2	6.5	5.8	7.2	8.9	#505 Ckt. flow 5.9 MVA (259A), S. Dart.
						OPEN 6341						180A regulator overloaded at 44% over
												4.1 MVA rating. 1/0 Triplex Aerial
												cable overloaded 35% over 4.4 MVA
							SWITCHING OPTION #2					(192 Amp) rating.
												Note: Pre Circuit 63 / 65 split project
63	3.2	3.6	1796	503 (533)	CrossRd 109	CLOSE T1-63-503	9.1	10	12.6	14.0	9.9 *	#503 Ckt. 2/0 Cu wire overloaded 5% over
						OPEN 6341						6.9 MVA emg. rating. Serious voltage
												violations 0.91-0.95 pu on 533/503 ckts.
												Cross Rd 533 exceeds 9.9 MVA alarm
Hawthorne Sub. - #502 Circuit												
502	2.8	2.9	1193	501 (72)		CLOSE T1-501-502	3.8	3.8	6.7	6.8	6.5	#72 Circuit flow 5% over 6.5 MVA SCADA
						OPEN 50251						Alarm Limit
Hawthorne Sub. - #506 Circuit												
506	0.8	0.9	(?)	502 (70)		CLOSE T1-501-502	4.0	4.0	3.5	3.6	6.5	No change in #70 Circuit Loading
						OPEN 50251						
Highland Sub. - #403 Circuit												
403	2.7	2.2		542 (541)	CrossRd 109	CLOSE T1-403-542UG	5.9	6.1	8.4	8.8	17.5	
						OPEN 40341						
Rockdale Sub. - #501 Circuit												
501	3.7	3.7	999	502 (70)		CLOSE T1-501-502	4.0	4.0	7.1	7.1	6.5	#70 Circuit at 9% over SCADA alarm
						OPEN 50281						of 6.5 MVA
506	0.8	0.9	(?)	505 (2)		CLOSE T1-506-505	2.2	6.5	3.1	6.5	8.9	
						OPEN 50651						

2003 T&D OPERATING STUDY
NEW BEDFORD DISTRICT

WING LANE TRANSFORMER OUTAGE CONTINGENCY

McGraw-Edison 21/28/35 MVA Transformer

Overload Ratings:

Summer Normal	45 MVA
Summer Emergency	49 MVA
Winter Normal	49 MVA
Winter Emergency	53 MVA

Switching Actions:

1. Isolate Wing Lane Bulk Transformer:

   Open: Circuit Switcher 11472
   Main Circuit Breaker 114B72

   Close: Nothing

2. Transfer Wing Lane #240 circuit to Arsene Street #220 circuit:

   Open: Feeder Breaker #24072 at Wing Lane

   Close: Tie Switch #T1-220-240 on R.O.W. North of Bridge St.

3. Transfer Wing Lane #241 circuit to Industrial Park #106 circuit. #106 circuit load increases to 11.1 MVA (108% of 10.3 MVA SCADA alarm setting, 93% of 12 MVA 500kcmil 1-conductor cable rating):

   Open: Feeder Breaker #24172 at Wing Lane

   Close: Tie Switch #T1-106-241 on R.O.W.

4. Unload Industrial Park #106 circuit to reduce loading on 500 kcmil station getaway by transferring Acushnet Avenue #160 circuit to Industrial Park #104 circuit:

   Open: Recloser #160-1 on Acushnet Avenue at R.O.W.

   Close: Tie Switch #T1-104-160 on Phillips Road.

5. Transfer A.T.& T. from Wing Lane #242 circuit to Arsene St. #222 circuit:

Open: Feeder Breaker #24272 at Wing Lane

Close: 13.2kV Bus tie breaker at A.T. & T.

Results:

Step #3 increases Industrial Park #106 circuit loading from 5.5 MVA to 11.1.

Step #4 reduces #106 circuit loading to 8.3 MVA.

Reference **Diagrams NB-27 through NB -29.**

Loading	No heavy loading conditions were identified.
Voltage	No low voltage conditions were identified.

Additional Actions Required:

None

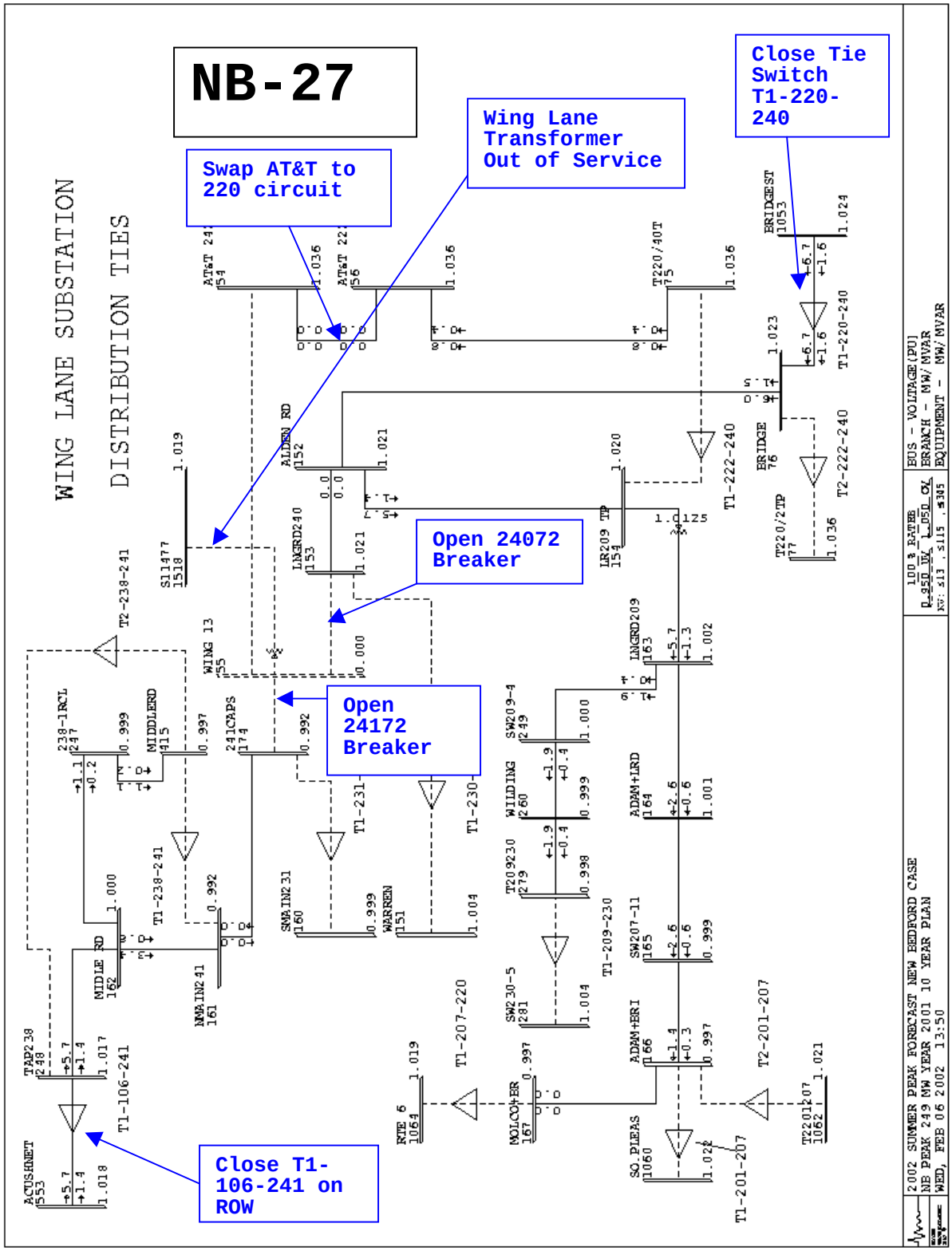
NB-27
Swap AT&T to 220 circuit
Wing Lane Transformer Out of Service
Close Tie Switch T1-220-240
Open 24072 Breaker
Open 24172 Breaker
Close T1-106-241 on ROW
WING LANE SUBSTATION
DISTRIBUTION TIES
2002 SUMMER PEAK FORECAST NEW BEDFORD CASE
NB PEAK 249 MW YEAR 2001 10 YEAR PLAN
WED, FEB 06 2002 13:50
EUS - VOLTAGE(PU)
BRANCH - MW/MVAR
EQUIPMENT - MW/MVAR

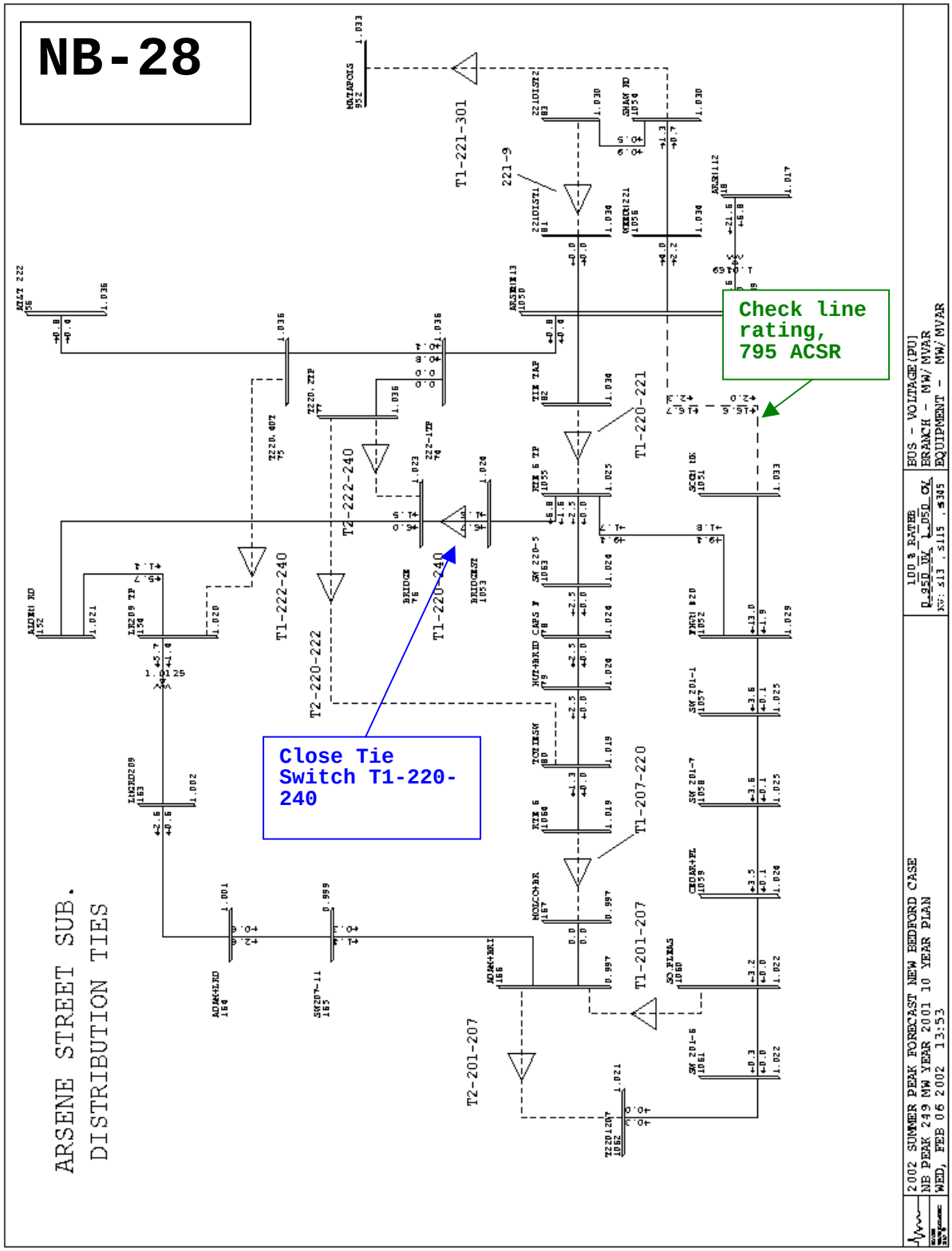
NB-28
ARSENE STREET SUB.
DISTRIBUTION TIES
Check line rating, 795 ACSR
Close Tie Switch T1-220-240
T1-221-301
T1-220-221
T2-222-240
T1-222-240
T2-220-222
T1-220-240
T1-207-220
T1-201-207
T2-201-207
2002 SUMMER PEAK FORECAST NEW BEDFORD CASE
NB PEAK 249 MW YEAR 2001 10 YEAR PLAN
WED, FEB 06 2002 13:53
EUS - VOLTAGE(PU)
BRANCH - MW/ MVAR
EQUIPMENT - MW/ MVAR

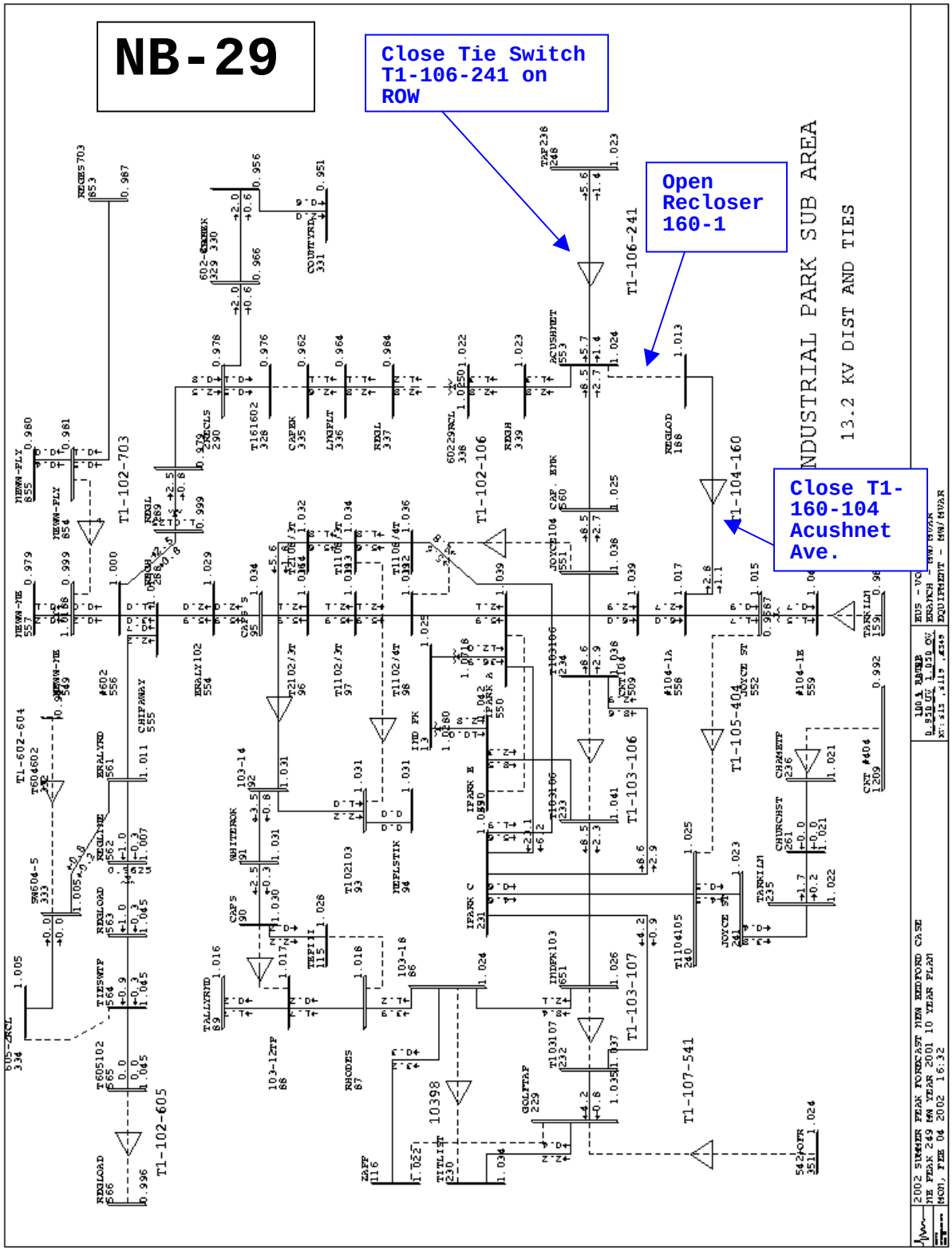
NB-29
Close Tie Switch T1-106-241 on ROW
Open Recloser 160-1
Close T1-160-104 Acushnet Ave.
INDUSTRIAL PARK SUB AREA
13.2 KV DIST AND TIES
T1-102-703
T1-102-106
T1-106-241
T1-104-160
T1-602-604
T1-102-605
T1-103-106
T1-105-404
T1-103-107
T1-107-541
2002 SUMMER PEAK FORECAST NEW BEDFORD CASE
MW PEAK 249 MW YEAR 2001 10 YEAR PLAN
MON, FEB 04 2002 16:32

BULK SUBSTATION DSS LINE SINGLE-CONTINGENCY ANALYSIS

- Coincident Feeder peaks at Forecasted Summer 2002 District Peaks
- Switching Sequences and Effects of Load Transfer Under Coincident Peak Conditions

CIRCUIT NUMBER	COINCIDENT PEAK LOAD (MW)	(MVA)	NUMBER CUSTOMERS	BACKUP CIRCUIT	BACKUP STATION	SWITCHING ACTIONS	BACKUP CKT. LOAD (BEFORE) (MW)	(MVA)	(AFTER) (MW)	(MVA)	SCADA ALARM (MVA)	PROBLEM AREAS
Wing Lane Substation												
240	6.5	6.8	2545	222	Arsene St.	CLOSE T1-222-240	2.3	2.7	8.8	9.4	13.0	
						OPEN 24072						
241	5.4	5.6	2829	106	IndPark 111	CLOSE T1-106-241	5.0	5.5	7.9	8.3	10.3	
						OPEN 24172						
				104	IndPark 111	OPEN 160-1	2.9	3.3	5.3	5.9	8.3	
						CLOSE T1-104-160						
242	0.0	0.0	1	222	Arsene St.	CLOSE AT&T TIE	2.3	2.7	2.3	2.7	13.0	
						OPEN 24272						

Plymouth District

Bulk Substation Transformer Outages

Distribution Supply Line Outages

Thermal Results and Remedial Switching Actions

2003 T&D OPERATING STUDY
PLYMOUTH DISTRICT

DUXBURY #117 TRANSFORMER OUTAGE CONTINGENCY

McGraw-Edison 30/40/50 [56] MVA Transformer

Overload Ratings:

Summer Normal	62 MVA
Summer Emergency	68 MVA
Winter Normal	70 MVA
Winter Emergency	75 MVA

Switching Actions:

Open: Circuit Switcher B11722
Main Circuit Breaker 117B22

Close: Bus Tie Breaker T-22

Results:

Reference Diagram **P-1**.

Loading	No heavy loading conditions were identified.
Voltage	No low voltage conditions were identified.

Additional Actions Required:

None

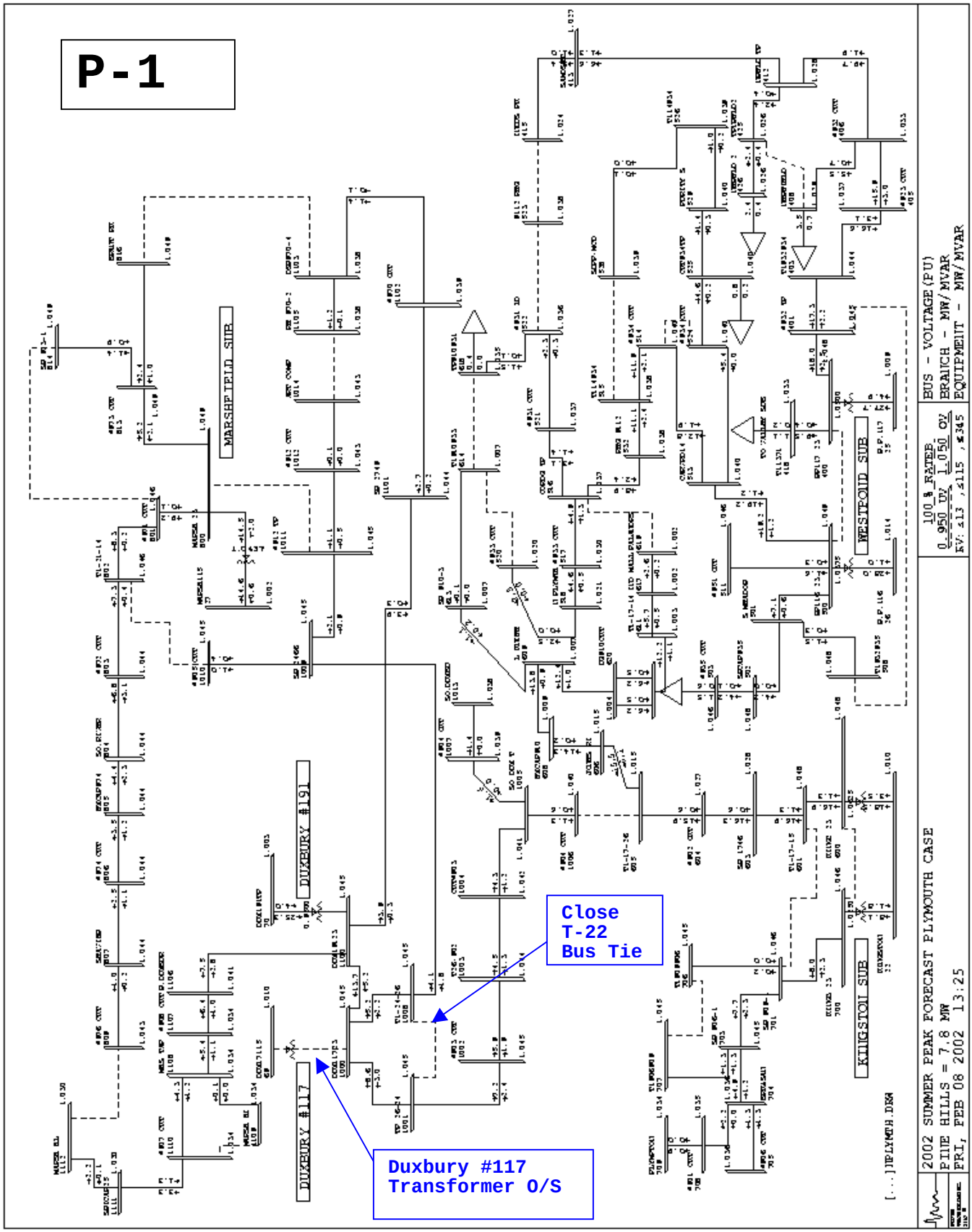
P-1
MARSHPTPID SUB
DUXBURY #191
DUXBURY #117
WESTPOID SUB
KINGSTOI SUB
Close
T-22
Bus Tie
Duxbury #117
Transformer O/S
2002 SUMMER PEAK FORECAST PLYMOUTH CASE
PIIE HILLS = 7.8 MW
FRI, FEB 08 2002 13:25
BUS - VOLTAGE(PU)
BRANCH - MW/MVAR
EQUIPMENT - MW/MVAR

2003 T&D OPERATING STUDY
PLYMOUTH DISTRICT

DUXBURY #191 TRANSFORMER OUTAGE CONTINGENCY

McGraw-Edison 30/40/50 [56] MVA Transformer

Overload Ratings:

Summer Normal	62 MVA
Summer Emergency	67 MVA
Winter Normal	70 MVA
Winter Emergency	75 MVA

Switching Actions:

Open: Circuit Switcher B19122
Main Circuit Breaker 191B22

Close: Bus Tie Breaker T-22

Results:

Reference Diagram **P-2**.

Loading	No heavy loading conditions were identified.
Voltage	No low voltage conditions were identified.

Additional Actions Required:

None

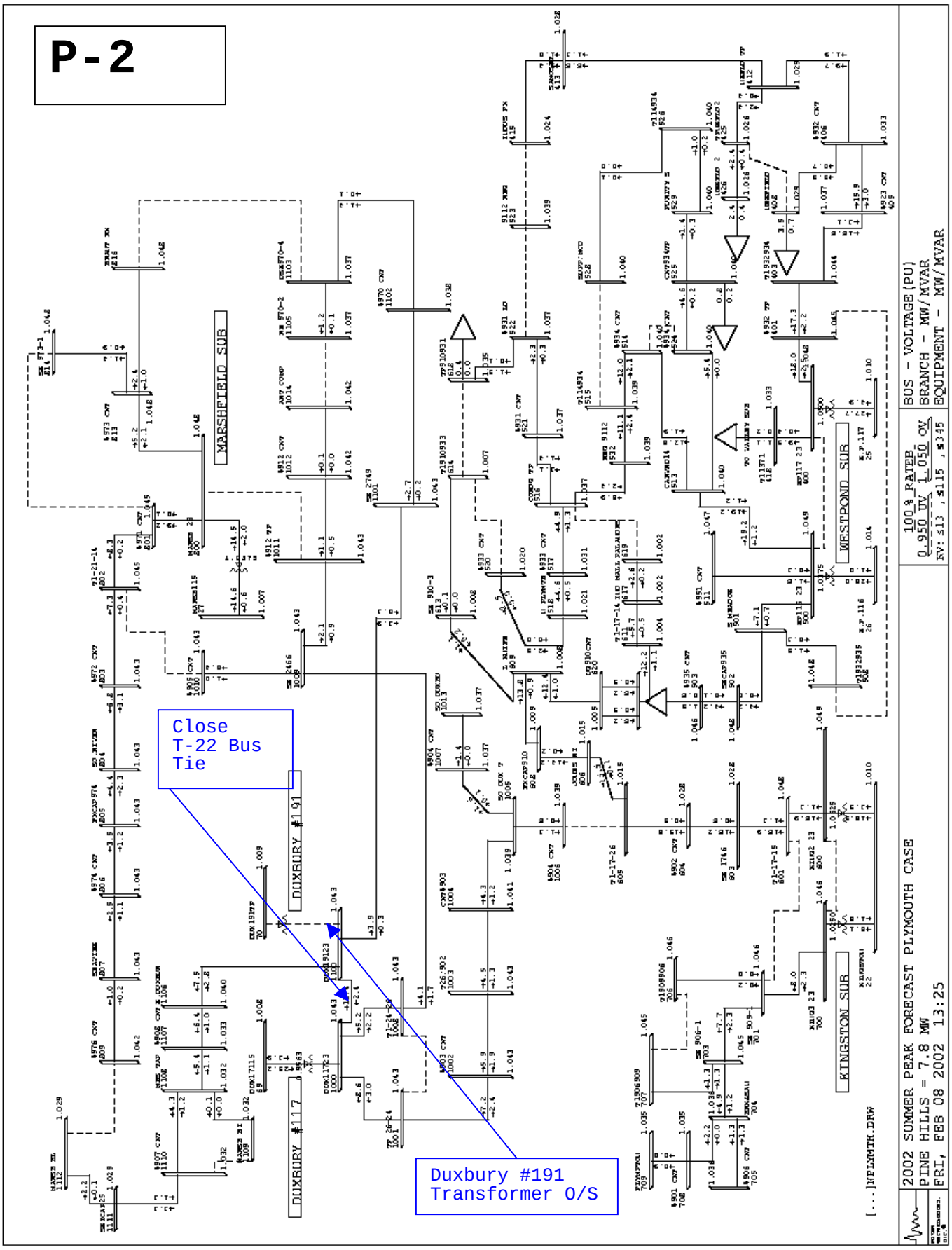
P-2
MARSHFIELD SUB
DUXBURY #191
DUXBURY #117
WESTPOND SUB
KINGSTON SUB
Close
T-22 Bus
Tie
Duxbury #191
Transformer O/S
100% RATEB
0.950 UV 1.050 OV
KV: ≤13 , ≤115 , ≤345
BUS - VOLTAGE(PU)
BRANCH - MW/MVAR
EQUIPMENT - MW/MVAR
2002 SUMMER PEAK FORECAST PLYMOUTH CASE
PINE HILLS = 7.8 MW
FRI, FEB 08 2002 13:25

BULK SUBSTATION DSS LINE SINGLE-CONTINGENCY ANALYSIS

* Coincident Feeder peaks at Forecasted Summer 2002 District Peaks
* Switching Sequences and Effects of Load Transfer Under Coincident Peak Conditions

CIRCUIT NUMBER	COINCIDENT PEAK LOAD (MW)	(MVA)	NUMBER CUSTOMERS	BACKUP CIRCUIT	BACKUP STATION	SWITCHING ACTIONS	BACKUP CKT. LOAD (BEFORE) (MW)	(MVA)	(AFTER) (MW)	(MVA)	SCADA ALARM (MVA)	PROBLEM AREAS
Duxbury Substation												
24	5.2	5.6	1851	26	Duxbury #117	CLOSE T1-24-26 OPEN 2422	8.6	9.1	13.8	14.7	22	
26	8.6	9.1	3281	24	Duxbury #117	CLOSE T1-24-26 OPEN 2622	5.2	5.6	13.7	14.7	22	
25	7.5	8.0	2464	21	Marshfield	CLOSE T1-21-25 OPEN 2522	9.3	9.3	16.9	17.0	22	
27	3.9	3.9	1829	22	Marshfield	CLOSE T1-22-27 OPEN 2722	5.2	5.6	9.2	9.3	22	

2003 T&D OPERATING STUDY
PLYMOUTH DISTRICT

KINGSTON #192 TRANSFORMER OUTAGE CONTINGENCY

Allis-Chalmers 12/16/20 MVA Transformer

Overload Ratings:

Summer Normal	29 MVA
Summer Emergency	31 MVA
Winter Normal	31 MVA
Winter Emergency	31 MVA

Switching Actions:

Open: Circuit Switcher 19252
Main Circuit Breaker 192B52
Feeder Breaker #1752

Close: Bus Tie Breaker T1-52
Tie Switch #T1-17-26

Results:

Reference Diagram **P-3**.

Loading	No heavy loading conditions were identified.
Voltage	No low voltage conditions were identified.

Additional Actions Required:

None

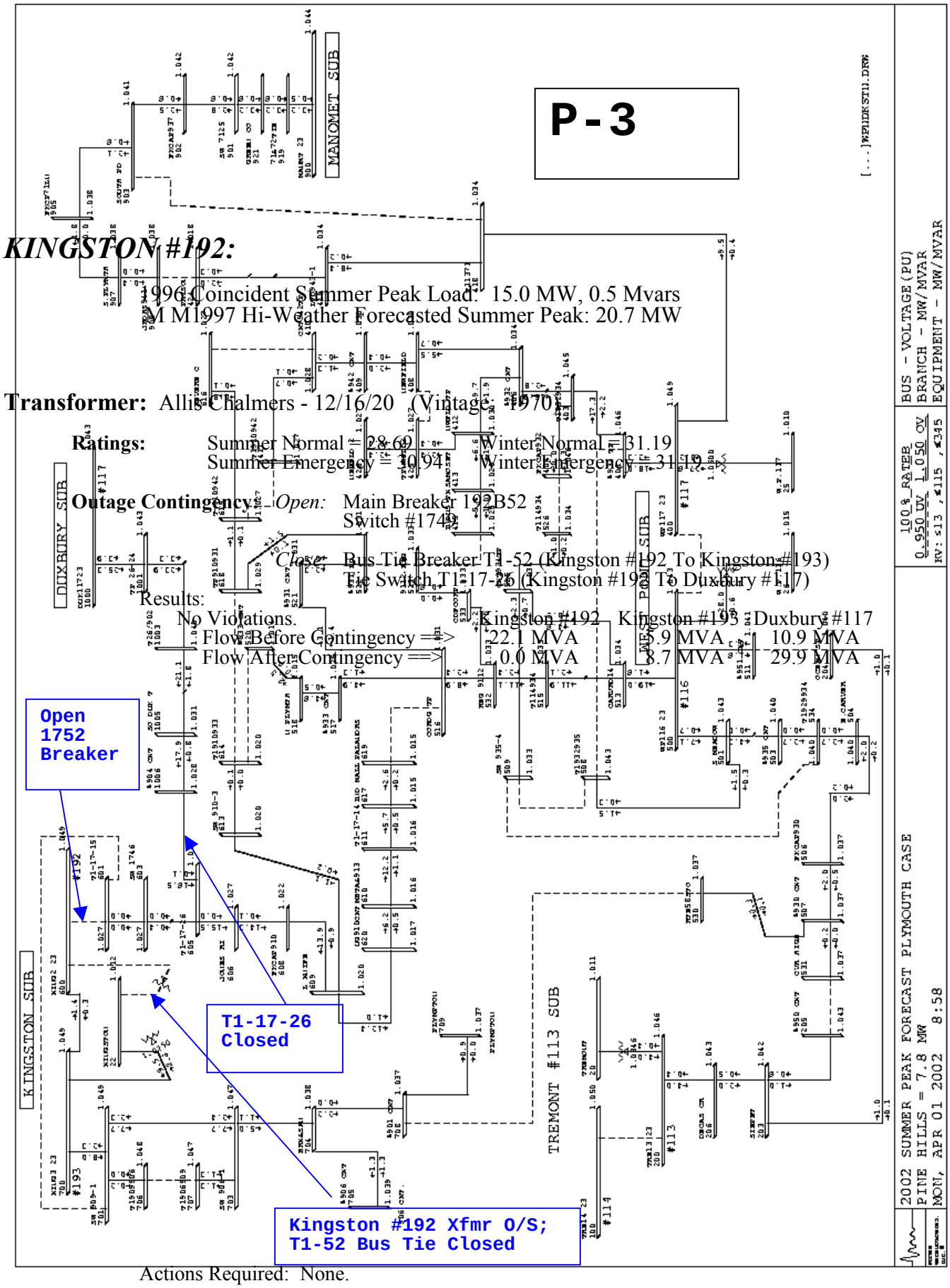

KINGSTON #192:

1996 Coincident Summer Peak Load: 15.0 MW, 0.5 Mvars
M M1997 Hi-Weather Forecasted Summer Peak: 20.7 MW

Transformer: Allis Chalmers - 12/16/20 (Vintage: 1970)

Ratings: Summer Normal = 28.69 Winter Normal = 31.19
Summer Emergency = 30.94 Winter Emergency = 31.19

Outage Contingency: *Open:* Main Breaker 192B52
Switch #1749

Close: Bus Tie Breaker T1-52 (Kingston #192 To Kingston #193)
Tie Switch T1-17-26 (Kingston #192 To Duxbury #117)

Results:
No Violations.

	Kingston #192	Kingston #193	Duxbury #117
Flow Before Contingency ==>	22.1 MVA	5.9 MVA	10.9 MVA
Flow After Contingency ==>	0.0 MVA	8.7 MVA	29.9 MVA

Actions Required: None.

2003 T&D OPERATING STUDY
PLYMOUTH DISTRICT

KINGSTON #193 TRANSFORMER OUTAGE CONTINGENCY

Allis-Chalmers 12/16/20 MVA Transformer

Overload Ratings:

Summer Normal	27 MVA
Summer Emergency	29 MVA
Winter Normal	31 MVA
Winter Emergency	33 MVA

Switching Actions:

Open: Circuit Switcher 19352
Main Circuit Breaker 193B52
Feeder Breaker #1552

Close: Bus Tie Breaker T1-52
Tie Switch #T1-901-930 (ties Kingston #15 line to the West Pond #10 Line).

Results:

Reference Diagram **P-4**.

Loading	No heavy loading conditions were identified.
Voltage	No low voltage conditions were identified.

Additional Actions Required:

None

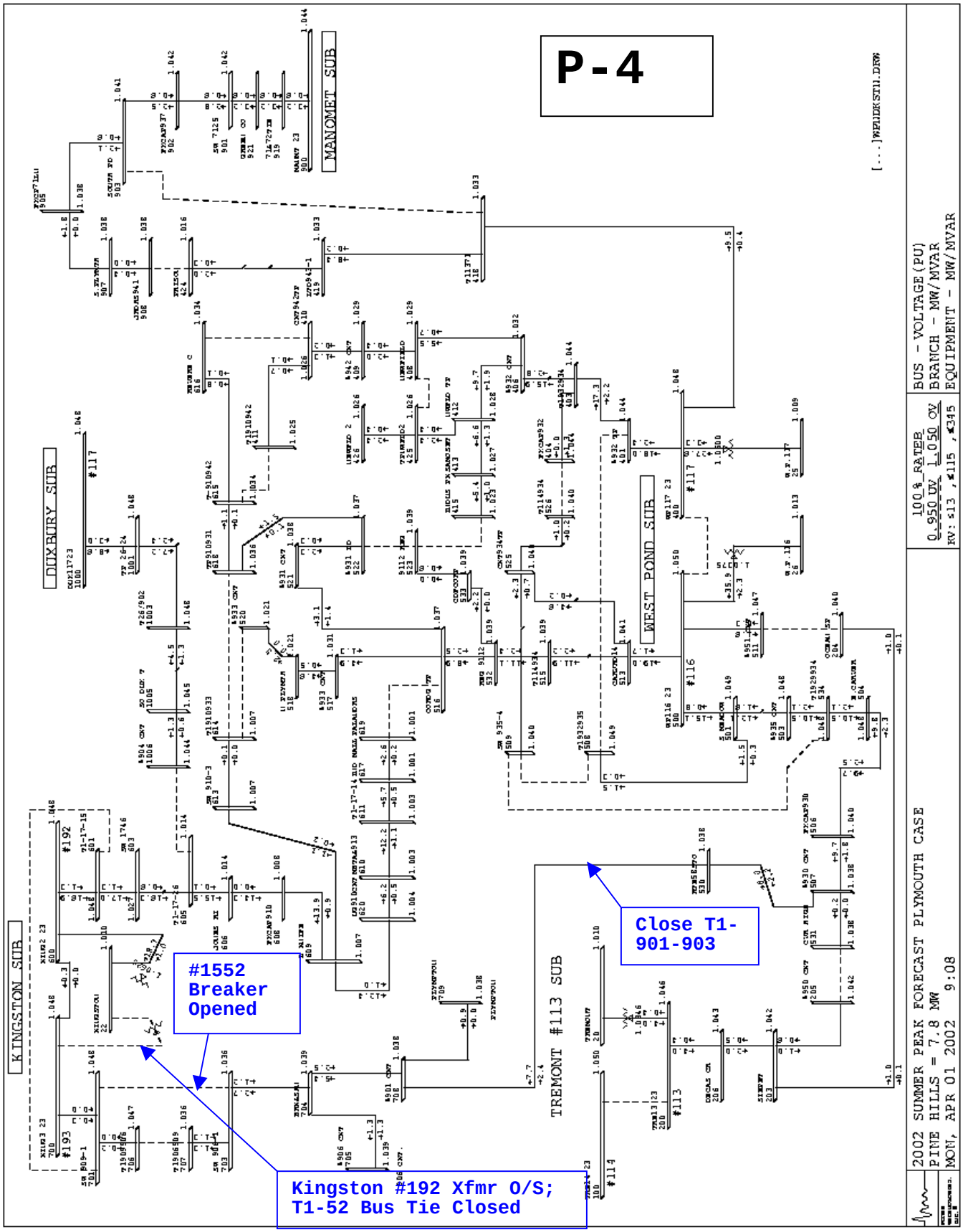
P-4
MANOMET SUB
DUXBURY SUB
WEST POND SUB
KINGSTON SUB
TREMONT #113 SUB
#1552 Breaker Opened
Close T1-901-903
Kingston #192 Xfmr O/S; T1-52 Bus Tie Closed
2002 SUMMER PEAK FORECAST PLYMOUTH CASE
PINE HILLS = 7.8 MW
MON, APR 01 2002 9:08
BUS - VOLTAGE(PU)
BRANCH - MW/MVAR
EQUIPMENT - MW/MVAR

BULK SUBSTATION DSS LINE SINGLE-CONTINGENCY ANALYSIS

* Coincident Feeder peaks at Forecasted Summer 2002 District Peaks
* Switching Sequences and Effects of Load Transfer Under Coincident Peak Conditions

CIRCUIT NUMBER	COINCIDENT PEAK LOAD (MW)	(MVA)	NUMBER CUSTOMERS	BACKUP CIRCUIT	BACKUP STATION	SWITCHING ACTIONS	BACKUP CKT. LOAD (BEFORE) (MW)	(MVA)	(AFTER) (MW)	(MVA)	SCADA ALARM (MVA)	PROBLEM AREAS
Kingston Substation												
17	16.9	16.9	3099	26	Duxbury #117	CLOSE T1-17-26	8.6	9.1	25.3	25.6	22	26 Line Flow 16% > 22 MVA SCADA Alarm
						OPEN 1752						
15	8.0	8.3	3493	10	W. Pond #116	CLOSE T1-901-930	7.1	7.1	15.4	15.4	13	#10 Line Flow 18% > 13 MVA SCADA Alarm
						OPEN 1552						

2003 T&D OPERATING STUDY
PLYMOUTH DISTRICT

MANOMET TRANSFORMER OUTAGE CONTINGENCY

Allis-Chalmers 12/16/20 MVA Transformer

Overload Ratings:

Summer Normal	27 MVA
Summer Emergency	29 MVA
Winter Normal	30 MVA
Winter Emergency	32 MVA

Switching Actions:

Open: Circuit Switcher 10812
Main Circuit Breaker 108B12
Feeder Breaker #7312

Close: Tie Switch #T1-13-71 (tie to West Pond)
Tie Switch #T1-73-89 (to Valley new transformer)

Results:

The Manomet 23 kV Transformer supplies load to the Plymouth area through three different paths: the 71 Feeder (extending westward from the substation), the 72 Feeder (extending eastward from the substation), and the 73 Feeder (extending southward from the substation).

As established by a Service Agreement between ENTERGY and NSTAR, Manomet Substation is required to reserve enough capacity to provide emergency shutdown/startup power for Pilgrim Nuclear Station Offsite Wheeling Requirements. This emergency shutdown/startup power would be supplied by Manomet's 72 Feeder. As a backup to the 72 Feeder and by way of the Manomet bus, the 71 Feeder would act as a second source bringing a supply of power from West Pond #117 Substation should there be a loss of the Manomet 23 kV transformer.

On an annual basis, ENTERGY submits to the Company three items: 1) The amount of load required by Pilgrim for emergency shutdown/startup power; 2) The power factor level; and 3) The three specific years designated as the study period. The Company then runs several contingencies to determine the effects, if any, which this additional load may have on the system, making recommendations accordingly when needed. For the past several years, the load and power factor levels submitted by ENTERGY have been 8.3 MW at a power factor level of 87.5%. This analysis has been conducted with the Pilgrim emergency shutdown/startup power in-service at 8.3 MW at a power factor of 87.5% lagging.

Reference Diagram **P-5**.

Loading	No heavy loading conditions were identified.
Voltage	No low voltage conditions were identified.

Additional Actions Required:

None

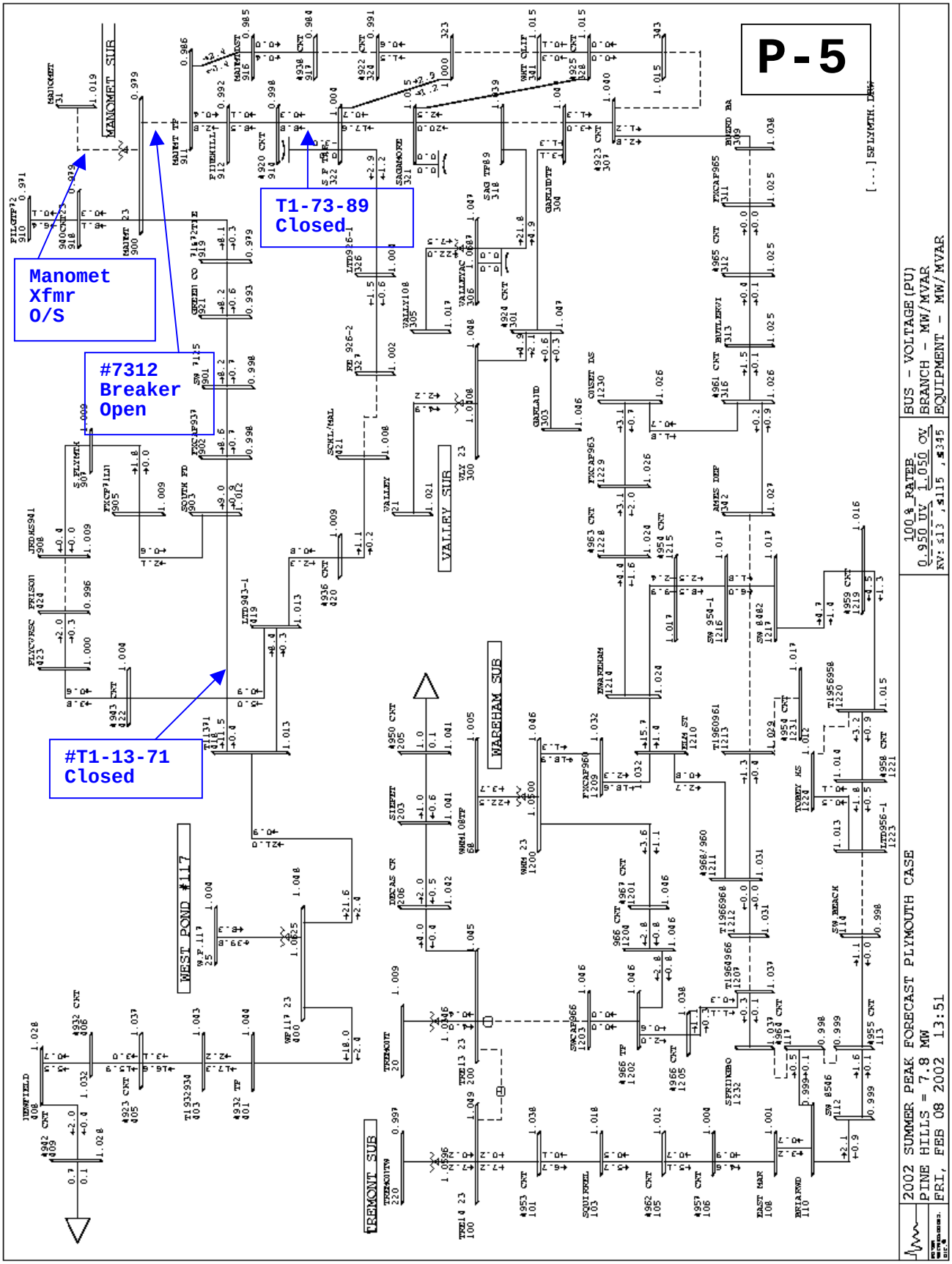
P-5
Manomet Xfmr O/S
#7312 Breaker Open
#T1-13-71 Closed
T1-73-89 Closed
MANOMET SUB
VALLEY SUB
WARHAM SUB
WEST POND #117
TREMONT SUB
2002 SUMMER PEAK FORECAST PLYMOUTH CASE
PINE HILLS = 7.8 MW
FRI, FEB 08 2002 13:51
BUS - VOLTAGE(PU)
BRANCH - MW/MVAR
EQUIPMENT - MW/MVAR

BULK SUBSTATION DSS LINE SINGLE-CONTINGENCY ANALYSIS

* **Coincident Feeder peaks at Forecasted Summer 2002 District Peaks**
* **Switching Sequences and Effects of Load Transfer Under Coincident Peak Conditions**

CIRCUIT NUMBER	COINCIDENT PEAK LOAD (MW)	(MVA)	NUMBER CUSTOMERS	BACKUP CIRCUIT	BACKUP STATION	SWITCHING ACTIONS	BACKUP CKT. LOAD (BEFORE) (MW)	(MVA)	(AFTER) (MW)	(MVA)	SCADA ALARM (MVA)	PROBLEM AREAS
Manomet Substation												
71	3.2	3.2	1077	13	W. Pond #117	CLOSE T1-13-71	9.6	9.6	12.9	12.9	13	99% of 13 MVA published SCADA Alarm
						OPEN 7112						
72 *	8.1	8.1	1590	NONE ***	NONE ***	SEE BELOW	0.0	0.0	0.0	0.0	0	No DSS backup
						OPEN 7212						
						Valley Double-Ending Assumed Completed						
73 **	2.8	2.8	2716	89	Valley #108	CLOSE T1-73-89	18.9	19.5	21.9	23.4	42	Assumed new SCADA Alarm Limit
						or 7326 **						
						OPEN 7313						
						Valley Double-Ending Assumed Not Completed						
73 ****	2.8	2.8	2716	89	Valley #108	CLOSE T1-73-89	18.9	19.5	21.9	23.4	19.8	Existing SCADA Alarm exceeded by 18%
						OPEN 7313						20 MVA Transformer Limit Exceeded by 16%
				84	Wareham	CLOSE T1-84-88	18.8	18.8	24.0	24.4	21	84 Ckt Flow Exceeds SCADA Alarm by 16%
						OPEN 8852						

* Pilgrim RSS load in-service

** Pine Hills load on #89 feeder out of Valley #108

*** There is backup available by tying the 72 line through the #940 and #938 circuits as described below.

**** Pine Hills load on #89 feeder out of Valley #113

Currently, under emergency conditions, the #940 Circuit is connected to the #938 Circuit at pole 46/80. In order to make this connection, existing 40 Amp (40T) fuses are changed to solid disconnect switches. As a result of this limitation, it is not feasible to use the connection of these two circuits as a regular tie.

The Company is required by contract, to provide emergency shutdown/startup power through the 72 Feeder for Pilgrim Nuclear Station Offsite Wheeling Requirements.

2003 T&D OPERATING STUDY
PLYMOUTH DISTRICT

MARSHFIELD TRANSFORMER OUTAGE CONTINGENCY

Allis-Chalmers 12/16/20 MVA Transformer

Overload Ratings:

Summer Normal	28 MVA
Summer Emergency	30 MVA
Winter Normal	32 MVA
Winter Emergency	34 MVA

Switching Actions:

Open: Circuit Switcher 19192
Main Circuit Breaker 191B92

Close: Tie Switch #T1-23-24 (transfers entire station to Duxbury #117 transformer)

Results:

Reference Diagram **P-7**.

Loading	No heavy loading conditions were identified.
Voltage	No low voltage conditions were identified.

Additional Actions Required:

None.

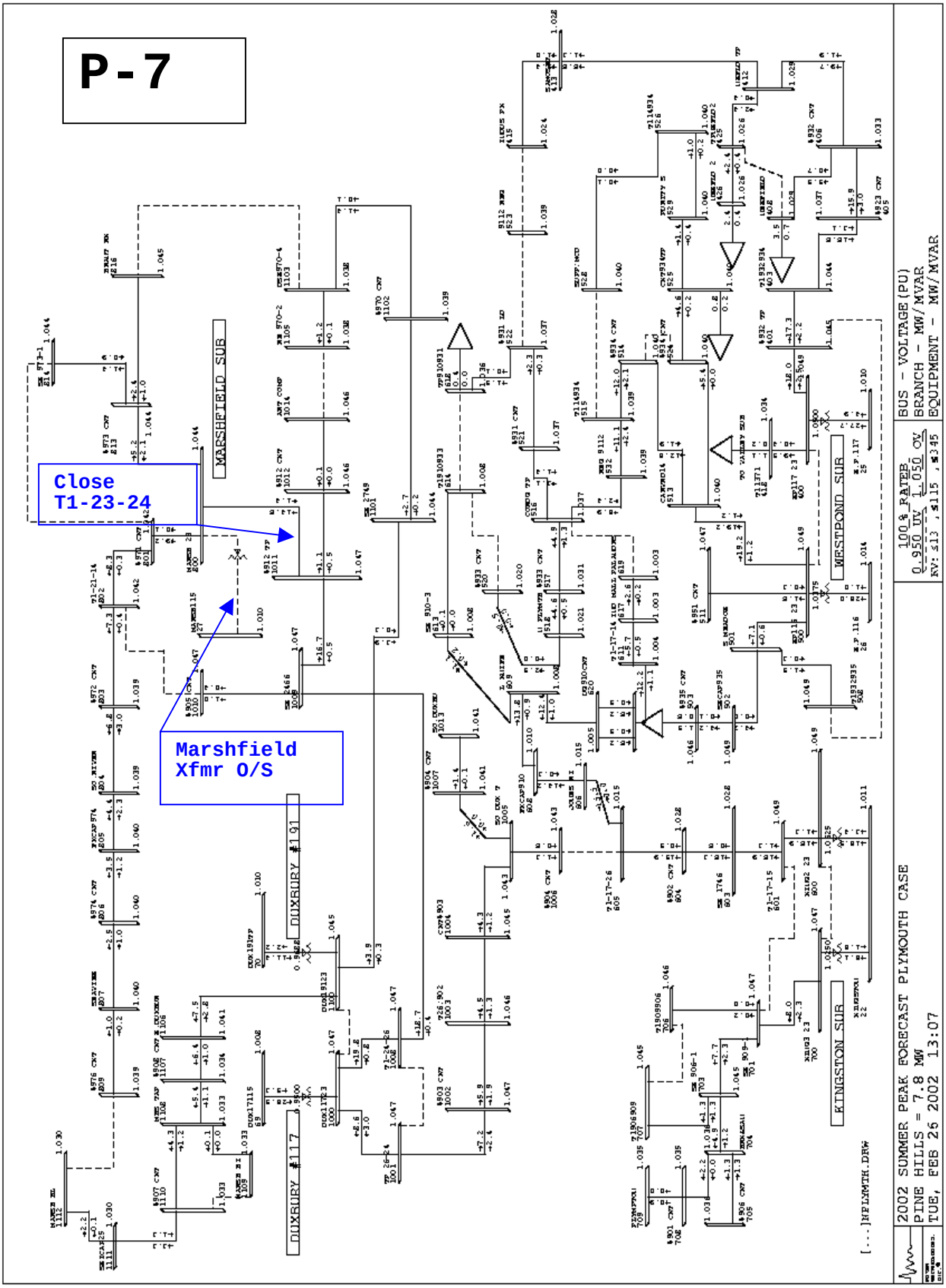
P-7
Close
T1-23-24
Marshfield
Xfmr O/S
MARSHFIELD SUB
DUXBURY #191
DUXBURY #117
WESTPOND SUB
KINGSTON SUB
100% RATEB
0.950 UV 1.050 OV
KV: ≤13 ,≤115 ,≤345
BUS - VOLTAGE(PU)
BRANCH - MW/MVAR
EQUIPMENT - MW/MVAR
2002 SUMMER PEAK FORECAST PLYMOUTH CASE
PINE HILLS = 7.8 MW
TUE, FEB 26 2002 13:07
[...]MPLYMTH.DRW

BULK SUBSTATION DSS LINE SINGLE-CONTINGENCY ANALYSIS

* Coincident Feeder peaks at Forecasted Summer 2002 District Peaks
* Switching Sequences and Effects of Load Transfer Under Coincident Peak Conditions

CIRCUIT NUMBER	COINCIDENT PEAK LOAD (MW)	(MVA)	NUMBER CUSTOMERS	BACKUP CIRCUIT	BACKUP STATION	SWITCHING ACTIONS	BACKUP CKT. LOAD (BEFORE) (MW)	(MVA)	(AFTER) (MW)	(MVA)	SCADA ALARM (MVA)	PROBLEM AREAS
Marshfield Substation												
21	9.3	9.3	5974	24	Duxbury #117	CLOSE T1-21-24 OPEN 2192	5.2	5.6	14.5	14.7	22	
22	5.2	5.6	2027	27	Duxbury #191	CLOSE T1-22-27 OPEN 2292	3.9	3.9	9.4	9.5	22	
23 *	0.0	0.0	0	24	Duxbury #117	NONE REQUIRED	0.0	0.0	0.0	0.0	24	

* Normally open and served from Duxbury

2003 T&D OPERATING STUDY
PLYMOUTH DISTRICT

ROCHESTER #112 TRANSFORMER OUTAGE CONTINGENCY

Westinghouse 10/12 MVA Transformer

Overload Ratings:

Summer Normal	15 MVA
Summer Emergency	16 MVA
Winter Normal	22 MVA
Winter Emergency	23 MVA

Switching Actions:

Open: Circuit Switcher 11252
Main recloser 112B52

Close: Tie Breaker #T-52 (transfers entire station to Rochester #114 transformer)

Results:

Reference Diagram **P-8**.

Loading	No heavy loading conditions were identified.
Voltage	No low voltage conditions were identified.

Additional Actions Required:

None.

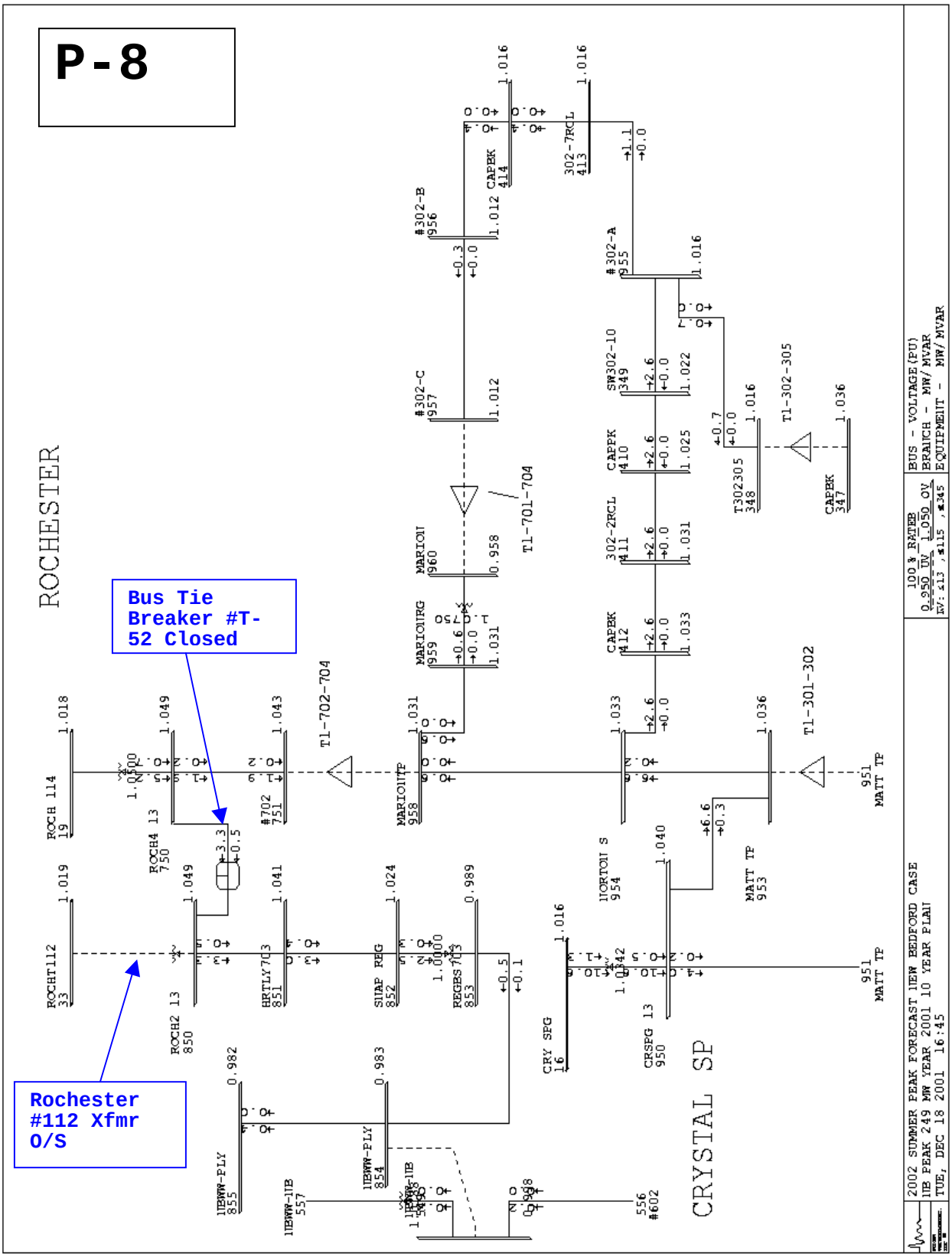
P-8
Bus Tie Breaker #T-52 Closed
Rochester #112 Xfmr O/S
ROCHESTER
CRYSTAL SP
2002 SUMMER PEAK FORECAST NEW BEDFORD CASE
NB PEAK 249 MW YEAR 2001 10 YEAR PLAN
TUE, DEC 18 2001 16:45
BUS - VOLTAGE(PU)
BRANCH - MW/MVAR
EQUIPMENT - MW/MVAR

2003 T&D OPERATING STUDY
PLYMOUTH DISTRICT

ROCHESTER #114 TRANSFORMER OUTAGE CONTINGENCY

Wagner 5 MVA Transformer

Overload Ratings:

Summer Normal	6 MVA
Summer Emergency	6 MVA
Winter Normal	8 MVA
Winter Emergency	9 MVA

Switching Actions:

Open: Circuit Switcher 11452
Main circuit breaker 114B52

Close: Tie Breaker #T-52 (transfers entire station to Rochester #112 transformer)

Results:

Reference Diagram **P-9**.

Loading	No heavy loading conditions were identified.
Voltage	No low voltage conditions were identified.

Additional Actions Required:

None.

P-9

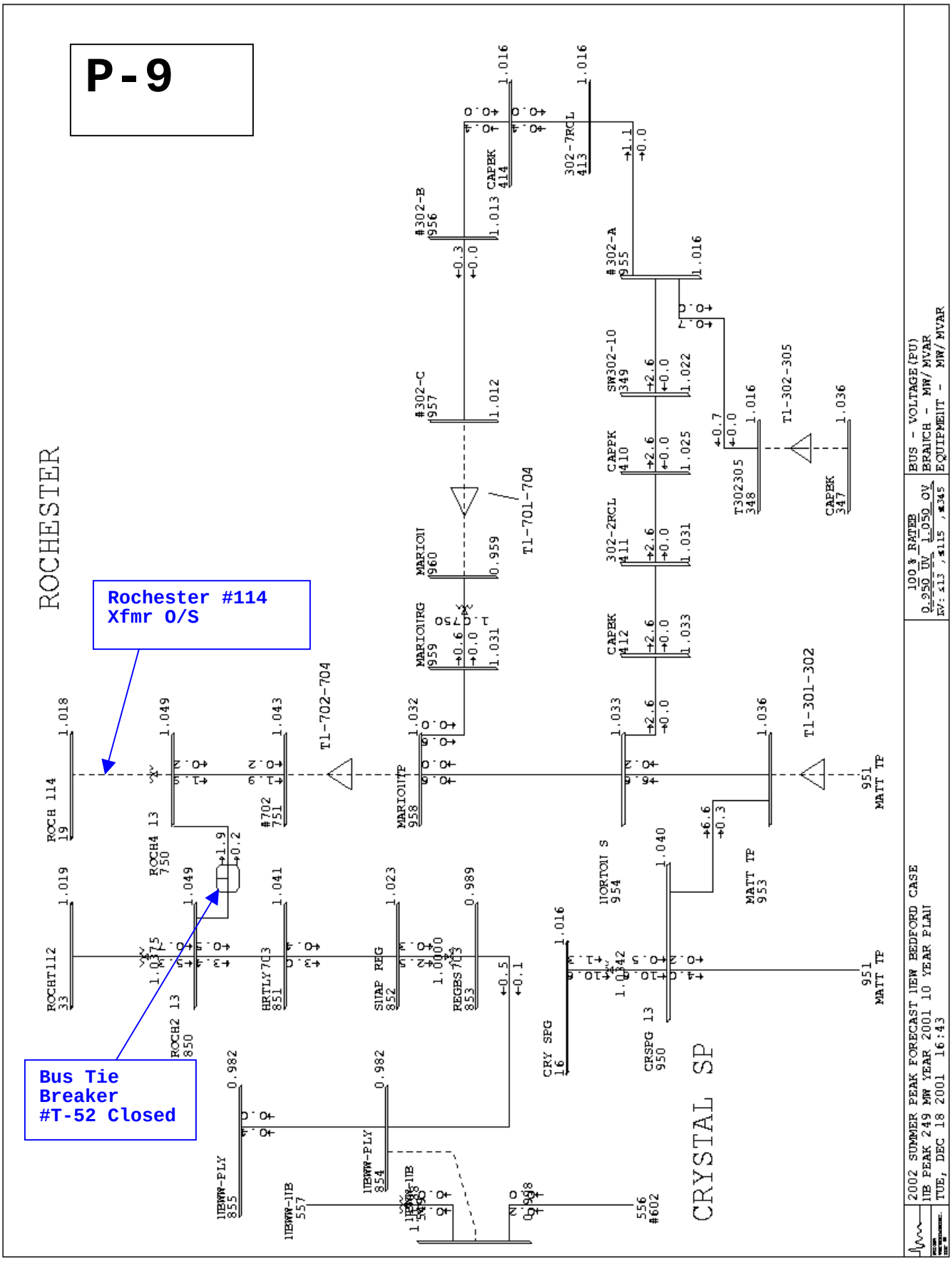

ROCHESTER
CRYSTAL SP
Rochester #114
Xfmr O/S
Bus Tie
Breaker
#T-52 Closed
2002 SUMMER PEAK FORECAST NEW BEDFORD CASE
NB PEAK 249 MW YEAR 2001 10 YEAR PLAN
TUE, DEC 18 2001 16:43
100 % RATEB
0.950 UV 1.050 OV
BUS - VOLTAGE(PU)
BRANCH - MW/MVAR
EQUIPMENT - MW/MVAR

BULK SUBSTATION DSS LINE SINGLE-CONTINGENCY ANALYSIS

* Coincident Feeder peaks at Forecasted Summer 2002 District Peaks
* Switching Sequences and Effects of Load Transfer Under Coincident Peak Conditions

CIRCUIT NUMBER	COINCIDENT PEAK LOAD (MW)	(MVA)	NUMBER CUSTOMERS	BACKUP CIRCUIT	BACKUP STATION	SWITCHING ACTIONS	BACKUP CKT. LOAD (BEFORE) (MW)	(MVA)	(AFTER) (MW)	(MVA)	SCADA ALARM (MVA)	PROBLEM AREAS
Rochester Substation												
						*						
702	1.9	2.0	848	703	Rochester	CLOSE T2-702-703	3.3	4.0	5.5	5.8	8.2	
						OPEN 70252						
						*						
703	3.3	4.0	885	702	Rochester	CLOSE T2-702-703	1.9	2.0	5.5	6.5	8.2	
						OPEN 70352						

* Prior to closing this tie switch, an 1800 kvar switched capacitor bank on pole 184/2 on the 703 circuit (near the sub) must be opened.

2003 T&D OPERATING STUDY
PLYMOUTH DISTRICT

TREMONT #113 TRANSFORMER OUTAGE CONTINGENCY

GE 12/12/12 MVA Transformer Bank

Overload Ratings:

Summer Normal	12 MVA *
Summer Emergency	12 MVA
Winter Normal	12 MVA
Winter Emergency	12 MVA

* These transformers, single-phase banks of vintage 1938, do not have loss-of-life emergency ratings calculated for them. Limit is 12 MVA top nameplate rating.

Switching Actions:

Open: Circuit Switcher B11332
Main circuit breaker 113B32

Close: Feeder Breaker #8332 (transfers Tremont #113 bus to Wareham Substation via the #83 DSS feeder).

Results:

Reference Diagram **P-10**.

Loading	No heavy loading conditions were identified.
Voltage	No low voltage conditions were identified.

Additional Actions Required:

None.

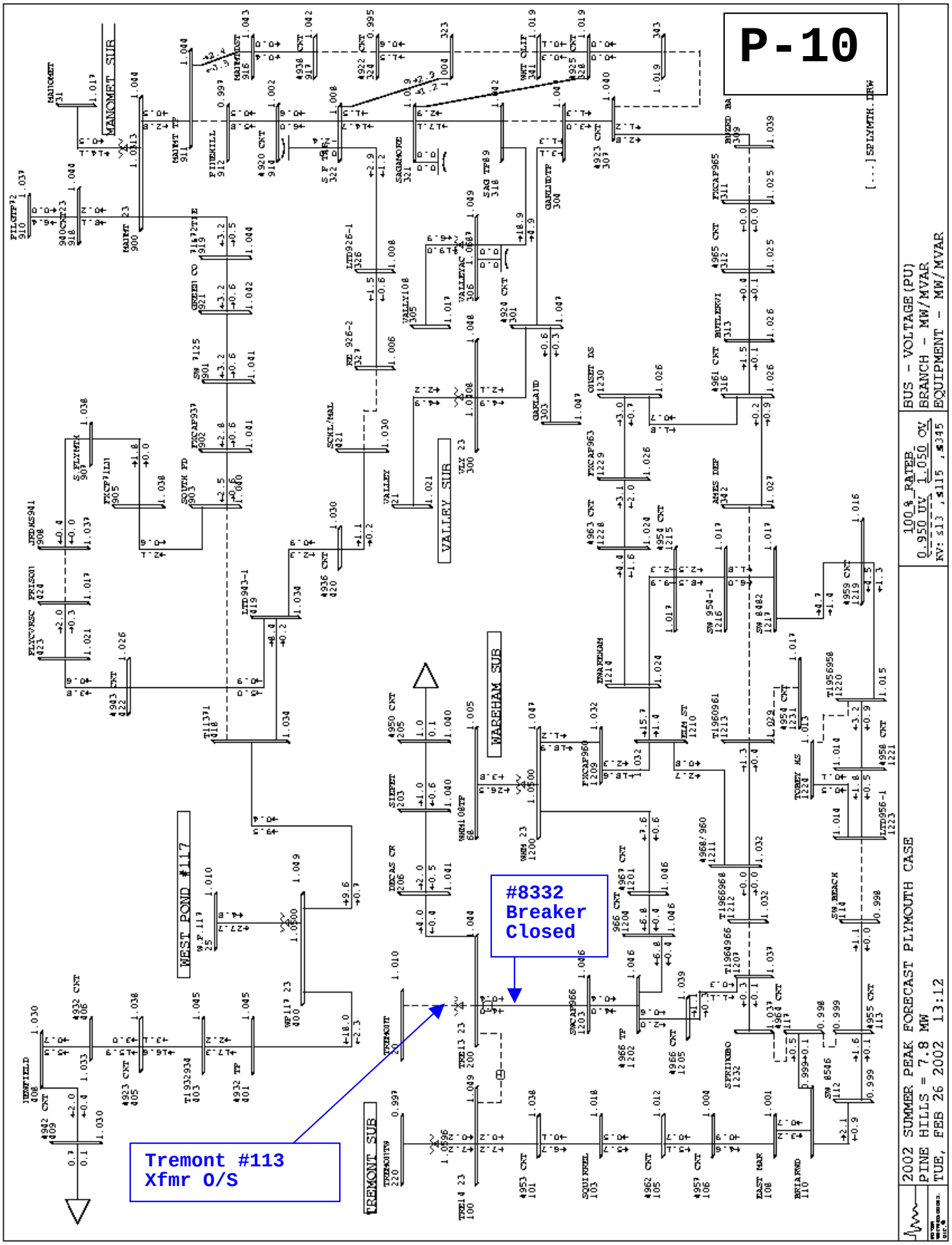
P-10
MANOMET SUB
VALLEY SUB
WARHAM SUB
WEST POND #117
TREMONT SUB
#8332
Breaker
Closed
Tremont #113
Xfmr O/S
100% RATED
0.950 UV 1.050 OV
KV: s13 ,s115 ,s345
BUS - VOLTAGE(PU)
BRANCH - MW/MVAR
EQUIPMENT - MW/MVAR
2002 SUMMER PEAK FORECAST PLYMOUTH CASE
PINE HILLS = 7.8 MW
TUE, FEB 26 2002 13:12

2003 T&D OPERATING STUDY
PLYMOUTH DISTRICT

TREMONT #114 TRANSFORMER OUTAGE CONTINGENCY

GE 12/12/12 MVA Transformer Bank

Overload Ratings:

Summer Normal	12 MVA *
Summer Emergency	12 MVA
Winter Normal	12 MVA
Winter Emergency	12 MVA

* These transformers, single-phase banks of vintage 1938, do not have loss-of-life emergency ratings calculated for them. Limit is 12 MVA top nameplate rating.

Switching Actions:

Open: Circuit Switcher B11432
Main circuit breaker 114B32

Close: Tremont bus tie breaker #T1-32.

Results:

Reference Diagram **P-11**.

Loading	No heavy loading conditions were identified.
Voltage	No low voltage conditions were identified.

Additional Actions Required:

None

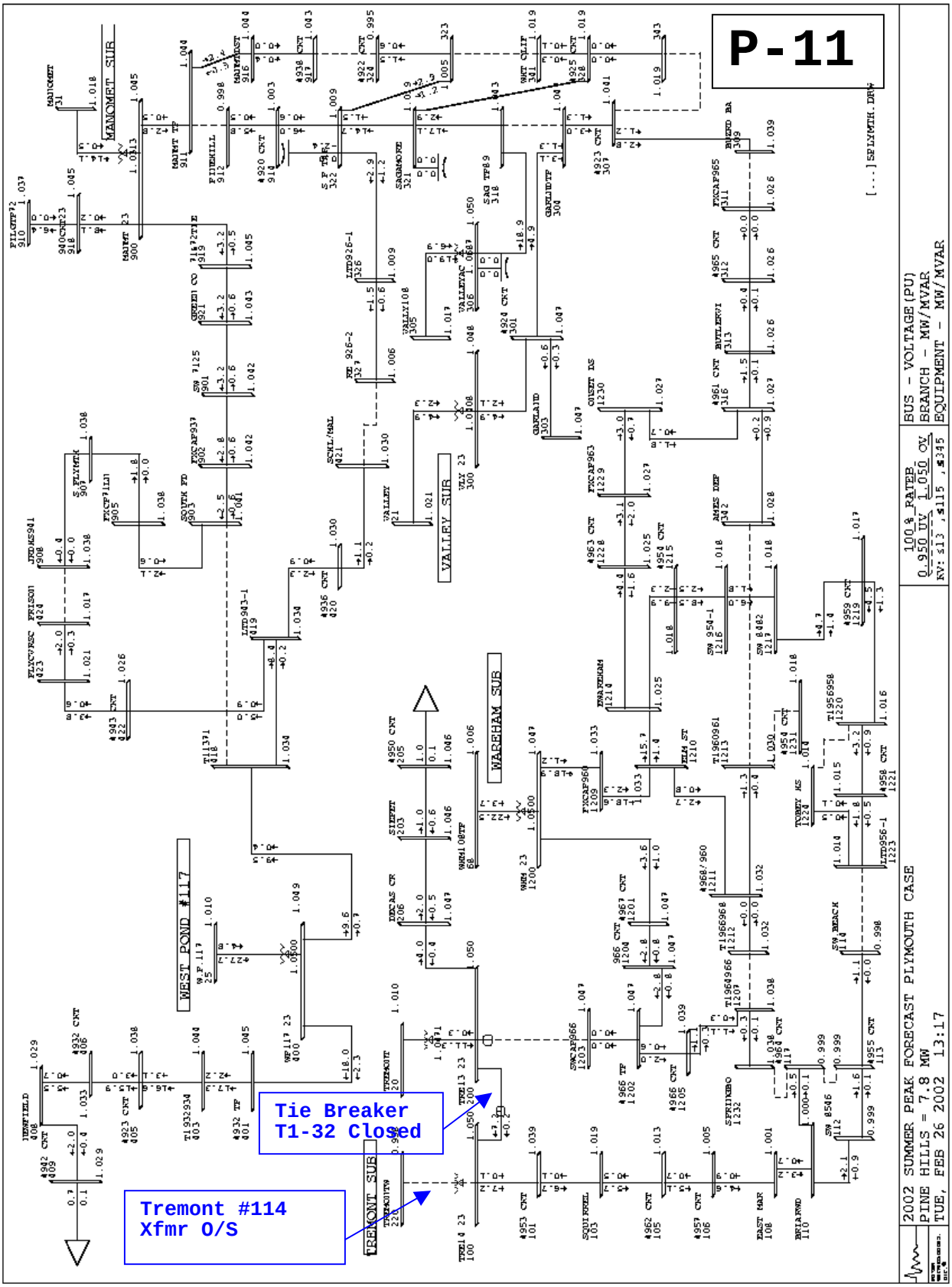
P-11
MANOMET SUB
VALLEY SUB
WAREHAM SUB
WEST POND #117
TREMONT SUB
Tie Breaker
T1-32 Closed
Tremont #114
Xfmr O/S
100% RATEB
0.950 UV 1.050 OV
KV: ≤13 ,≤115 ,≤345
BUS - VOLTAGE(PU)
BRANCH - MW/MVAR
EQUIPMENT - MW/MVAR
2002 SUMMER PEAK FORECAST PLYMOUTH CASE
PINE HILLS = 7.8 MW
TUE, FEB 26 2002 13:17

BULK SUBSTATION DSS LINE SINGLE-CONTINGENCY ANALYSIS

* Coincident Feeder peaks at Forecasted Summer 2002 District Peaks
* Switching Sequences and Effects of Load Transfer Under Coincident Peak Conditions

CIRCUIT NUMBER	COINCIDENT PEAK LOAD (MW)	(MVA)	NUMBER CUSTOMERS	BACKUP CIRCUIT	BACKUP STATION	SWITCHING ACTIONS	BACKUP CKT. LOAD (BEFORE) (MW)	(MVA)	(AFTER) (MW)	(MVA)	SCADA ALARM (MVA)	PROBLEM AREAS
Tremont Substation												
81	4.0	4.0	1751	11	W. Pond 116	CLOSE T1-11-81 OPEN 8132	1.6	1.6	5.8	5.8	14	
85	7.2	7.2	4487	84	Wareham	CLOSE T1-84-85 * OPEN 8532	18.8	18.8	26.3	26.4	21	#84 Ckt flow 26% > 21 MVA SCADA Alarm 84 Line resag project should permit use of full 28 MVA LTE conductor rating

* Tobey Hospital, Wareham, will not have an alternate feed during this tied condition

2003 T&D OPERATING STUDY
PLYMOUTH DISTRICT

VALLEY #113 (GE) TRANSFORMER OUTAGE CONTINGENCY

GE 12/16/20 [22] MVA Transformer

Overload Ratings:

Summer Normal	28 MVA *
Summer Emergency	30 MVA *
Winter Normal	32 MVA *
Winter Emergency	34 MVA *

* These are calculated loss-of-life ratings. The Valley GE transformer bank has thermal hot spots that have been identified via a thermal imaging survey conducted during an inspection of the unit. This unit is derated to 20 MVA until the double-ending of this station is complete in June, 2003. The commissioning of the new unit will permit a closer inspection of this unit to determine the acceptability of the higher overload ratings listed above. Moreover, existing transformer bank and both DSS feeders have a 20.7 MVA CT reading limit, beyond which higher loads could not be read by SCADA.

Switching Actions:

Open: Circuit Switcher 11352
Main Circuit Breaker 113B52

Close: New Bus Tie Breaker #T1-52 (?) (tie to new Valley #108 transformer bank)

Results:

As previously described for the Manomet Substation outage contingency, this analysis has been conducted with the Pilgrim emergency shutdown/startup power in-service at 8.3 MW at a power factor of 87.5% lagging.

Reference Diagram **P-12**.

Loading No heavy loading conditions were identified.

Voltage No low voltage conditions were identified.

Additional Actions Required: None

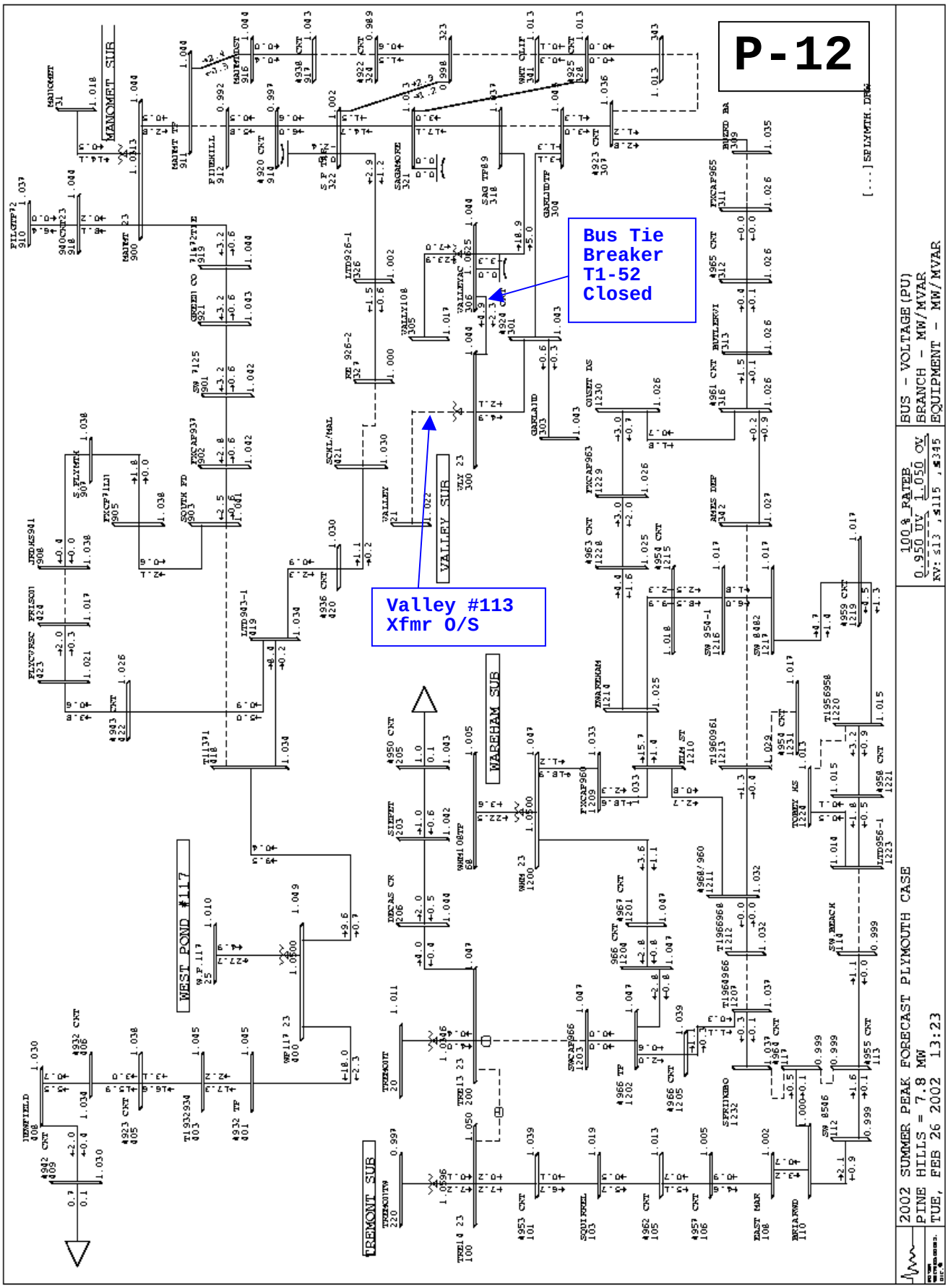
P-12
Bus Tie Breaker T1-52 Closed
Valley #113 Xfmr O/S
MANOMET SUR
VALLEY SUR
WAREHAM SUR
WEST POND #117
TREMONT SUR
2002 SUMMER PEAK FORECAST PLYMOUTH CASE
PINE HILLS = 7.8 MW
TUE, FEB 26 2002 13:23
BUS - VOLTAGE(PU)
BRANCH - MW/MVAR
EQUIPMENT - MW/MVAR

2003 T&D OPERATING STUDY
PLYMOUTH DISTRICT

VALLEY #108 (ALLIS-CHALMERS) TRANSFORMER OUTAGE CONTINGENCY

(TRANSFORMER ASSUMED IN-SERVICE 6/1/02)

Allis-Chalmers 15/20/25 MVA Transformer

Overload Ratings:

Summer Normal	28 MVA
Summer Emergency	42 MVA
Winter Normal	36 MVA
Winter Emergency	45 MVA

Switching Actions:

Open: Circuit Switcher 10852
Main Circuit Breaker 108B52

Close: New Bus Tie Breaker #T1-52 (?) (tie to existing Valley GE #113 transformer bank)

Results:

As previously described for the Manomet Substation outage contingency, this analysis has been conducted with the Pilgrim emergency shutdown/startup power in-service at 8.3 MW at a power factor of 87.5% lagging.

Reference Diagram **P-13A**.

Loading	No heavy loading conditions were identified.
Voltage	No low voltage conditions were identified.

Additional Actions Required:

None

P-13A

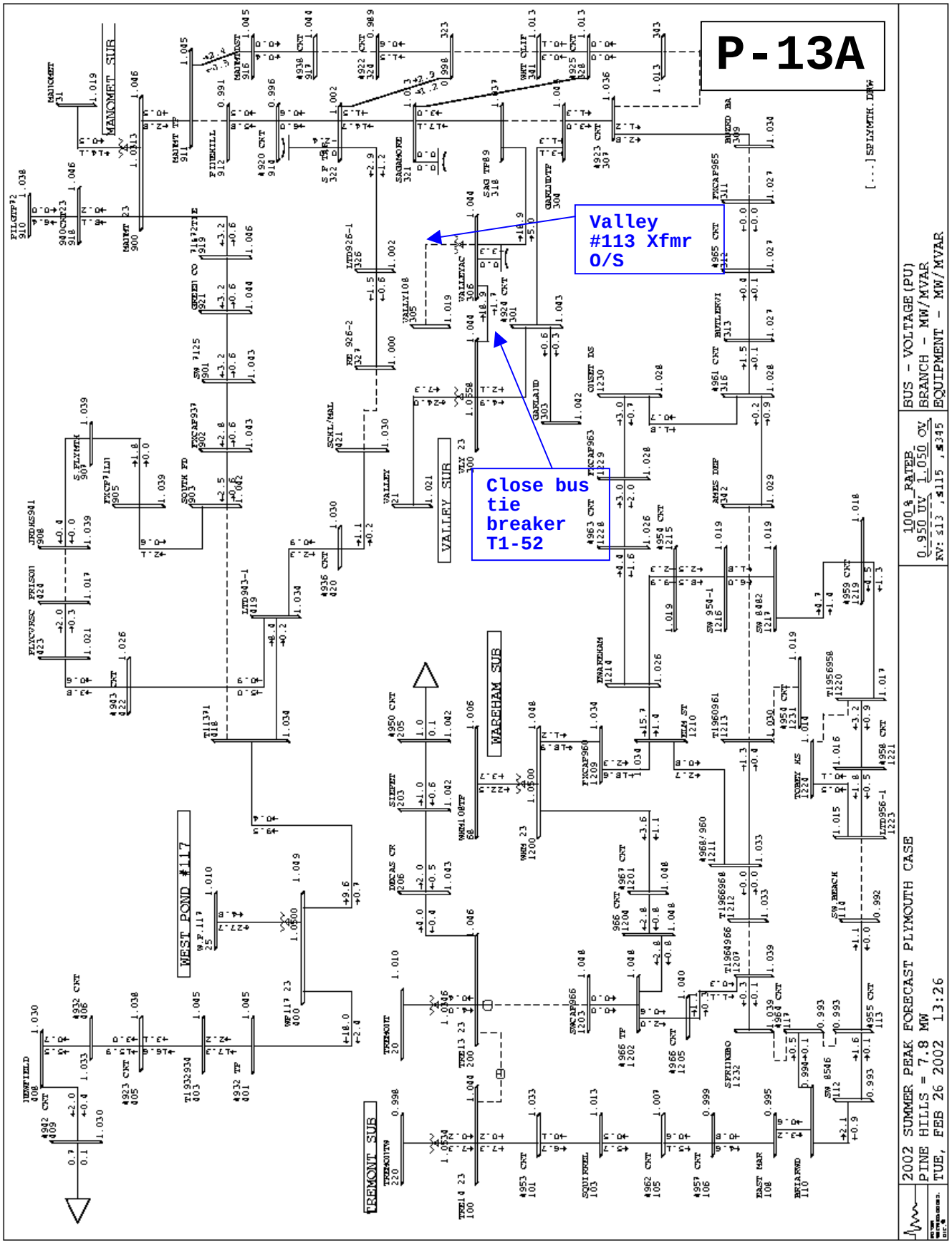
Valley #113 Xfmr O/S
Close bus tie breaker T1-52
MANOMET SUR
VALLEY SUR
WAREHAM SUR
WEST POND #117
TREMONT SUB
2002 SUMMER PEAK FORECAST PLYMOUTH CASE
PINE HILLS = 7.8 MW
TUE, FEB 26 2002 13:26
BUS - VOLTAGE(PU)
BRANCH - MW/MVAR
EQUIPMENT - MW/MVAR

BULK SUBSTATION DSS LINE SINGLE-CONTINGENCY ANALYSIS

* Coincident Feeder peaks at Forecasted Summer 2002 District Peaks
* Switching Sequences and Effects of Load Transfer Under Coincident Peak Conditions

Valley Substation

Valley Double-Ending Assumed Completed *

CIRCUIT NUMBER	COINCIDENT PEAK LOAD (MW)	(MVA)	NUMBER CUSTOMERS	BACKUP CIRCUIT	BACKUP STATION	SWITCHING ACTIONS	BACKUP CKT. LOAD (BEFORE) (MW)	(MVA)	(AFTER) (MW)	(MVA)	SCADA ALARM (MVA)	PROBLEM AREAS
88	4.9	5.3	5861	84	Wareham	CLOSE T1-84-88 OPEN 8852	18.8	18.8	24.0	24.3	21	#84 Ckt flow 26% > 21 MVA SCADA Alarm 84 Line resag project should permit use of full 28 MVA LTE conductor rating
89	18.9	19.5	6638	73	Manomet	CLOSE T1-73-89 or 7326 * OPEN 8952	2.8	2.8	17.2	17.7	21.2	Manomet Transformer load 27.2 MVA, 100% of SCADA Alarm **
				13	W. Pond 117	CLOSE T1-13-71 OPEN 7112	9.6	9.6	12.9	12.9	13	99% of 13 MVA published SCADA Alarm

* Presence of double-ended station at Valley does not impact DSS line contingency results

2003 T&D OPERATING STUDY
PLYMOUTH DISTRICT

WAREHAM TRANSFORMER OUTAGE CONTINGENCY

ASEA 30/40/50 MVA Transformer Bank

Overload Ratings:

Summer Normal	62 MVA
Summer Emergency	66 MVA
Winter Normal	70 MVA
Winter Emergency	73 MVA

Switching Actions:

Open: Circuit Switcher 10842
Main circuit breaker 108B42
Feeder Breaker #8442
Feeder Breaker #8342

Close: Feeder Breaker #8332 (at Tremont)
Tie Switch #T1-84-88

Results:

Reference Diagram **P-14**.

Loading	No heavy loading conditions were identified.
Voltage	No low voltage conditions were identified.

Additional Actions Required:

None.

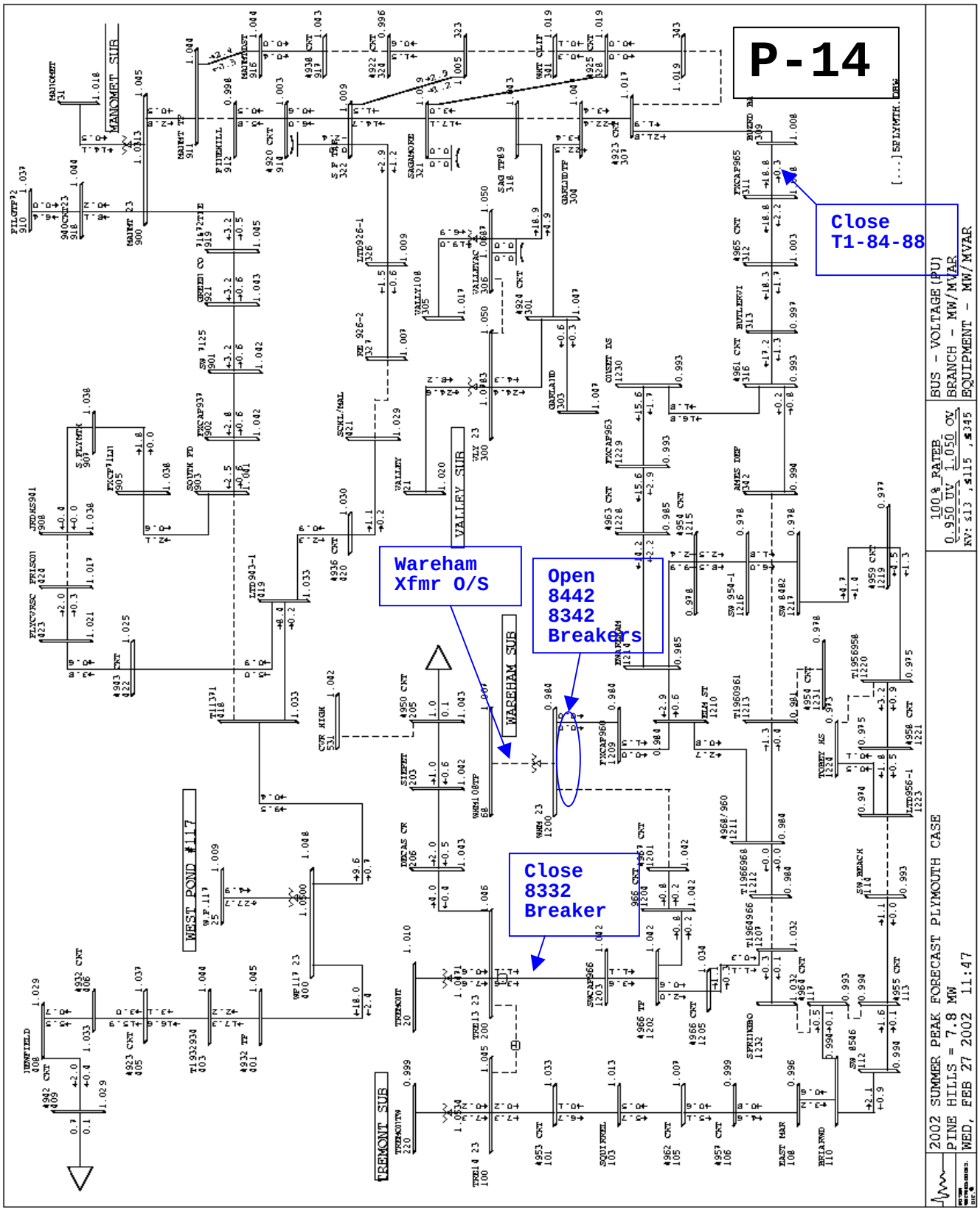
P-14
Close
T1-84-88
Wareham
Xfmr O/S
Open
8442
8342
Breakers
Close
8332
Breaker
MANOMET SUR
VALLEY SUR
WAREHAM SUR
WEST POND #117
TREMONT SUR
2002 SUMMER PEAK FORECAST PLYMOUTH CASE
PINE HILLS = 7.8 MW
WED, FEB 27 2002 11:47
BUS - VOLTAGE(PU)
BRANCH - MW/MVAR
EQUIPMENT - MW/MVAR

BULK SUBSTATION DSS LINE SINGLE-CONTINGENCY ANALYSIS

* Coincident Feeder peaks at Forecasted Summer 2002 District Peaks
* Switching Sequences and Effects of Load Transfer Under Coincident Peak Conditions

CIRCUIT NUMBER	COINCIDENT PEAK LOAD (MW)	(MVA)	NUMBER CUSTOMERS	BACKUP CIRCUIT	BACKUP STATION	SWITCHING ACTIONS	BACKUP CKT. LOAD (BEFORE) (MW)	(MVA)	(AFTER) (MW)	(MVA)	SCADA ALARM (MVA)	PROBLEM AREAS
	Wareham Substation											
						Valley Double-Ending Assumed Completed *						
83	3.6	3.8	1586	83	Tremont	CLOSE 8332 **	0.0	0.0	3.6	1.1	14	
						OPEN 8342						
84	18.8	18.8	6201	88	Valley 113	CLOSE T1-84-88	4.9	5.3	24.3	24.7	16.7	Published 16.7 MVA SCADA Alarm Setting Exceeded by 48%. This limit was based on 3/0 conductor. This has been upgraded to 795 ACSR. Recommend increase SCADA Alarm limit to 24 MVA LTE or greater
						OPEN 8842						
	** Tremont 83 Circuit normally open. Tie is 8332 breaker at Tremont											
						Valley Double-Ending Assumed Not Completed						
84	18.8	18.8	6201	88	Valley 113	CLOSE T1-84-88	4.9	5.3	29.4	30.4	16.7	Published 16.7 MVA SCADA Alarm Setting Exceeded by 48%. Valley Transformer load 33 MVA, 9% over 30 LTE rating, 65% over derated 20 MVA limit
						OPEN 8842						
						OPEN 925-2, CLOSE T1-923-925						
						OPEN 922-2, CLOSE T1-922-925						
				73	Manomet	CLOSE T1-73-89	2.8	2.8	17.2	17.7	21.2	Manomet Transformer load 27.2 MVA, 100% of 27 MVA SCADA Alarm
						OPEN 8952						
				13	W. Pond 117	CLOSE T1-13-71	9.6	9.6	12.9	12.9	13	99% of 13 MVA published SCADA Alarm
	* Peformance of 83 circuit, post contingency, not impacted by Valley Double-Ending Project											Marginally-acceptable voltages, 922 and 925 circuits, S. Plymouth - Cedarville

2003 T&D OPERATING STUDY
PLYMOUTH DISTRICT

WEST POND #116W TRANSFORMER OUTAGE CONTINGENCY

GE 30/40/50 [56] MVA Transformer Bank

Overload Ratings:

Summer Normal	61 MVA
Summer Emergency	67 MVA
Winter Normal	69 MVA
Winter Emergency	74 MVA

Switching Actions:

Open: Circuit Switcher B11672
Main circuit breaker 116B72

Close: West Pond 23kV bus tie breaker #T1-72*
* Tap changers must be in same position, and off.

Results:

Reference Diagram **P-16**.

Loading	No heavy loading conditions were identified.
Voltage	No low voltage conditions were identified.

Additional Actions Required:

None

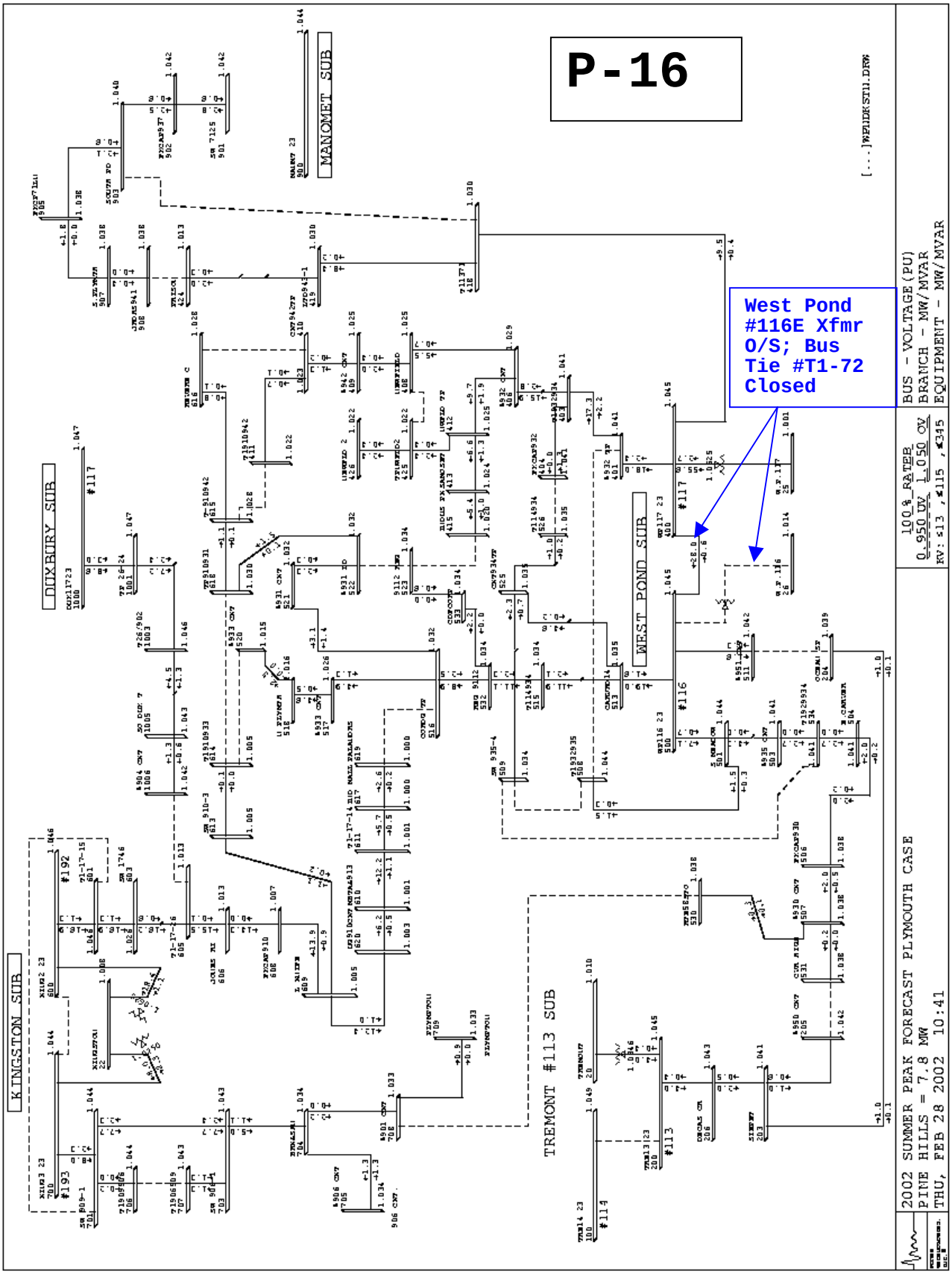
P-16
West Pond #116E Xfmr O/S; Bus Tie #T1-72 Closed
MANOMET SUB
DUXBURY SUB
WEST POND SUB
KINGSTON SUB
TREMONT #113 SUB
BUS - VOLTAGE(PU)
BRANCH - MW/MVAR
EQUIPMENT - MW/MVAR
2002 SUMMER PEAK FORECAST PLYMOUTH CASE
PINE HILLS = 7.8 MW
THU, FEB 28 2002 10:41

2003 T&D OPERATING STUDY
PLYMOUTH DISTRICT

WEST POND #117E TRANSFORMER OUTAGE CONTINGENCY

GE 30/40/50 [56] MVA Transformer Bank

Overload Ratings:

Summer Normal	60 MVA
Summer Emergency	65 MVA
Winter Normal	69 MVA
Winter Emergency	74 MVA

Switching Actions:

Open: Circuit Switcher B11772
Main circuit breaker 117B72

Close: West Pond 23kV bus tie breaker #T1-72*
* Tap changers must be in same position, and off.

Results:

Reference Diagram **P-17**.

Loading	No heavy loading conditions were identified.
Voltage	No low voltage conditions were identified.

Additional Actions Required:

None

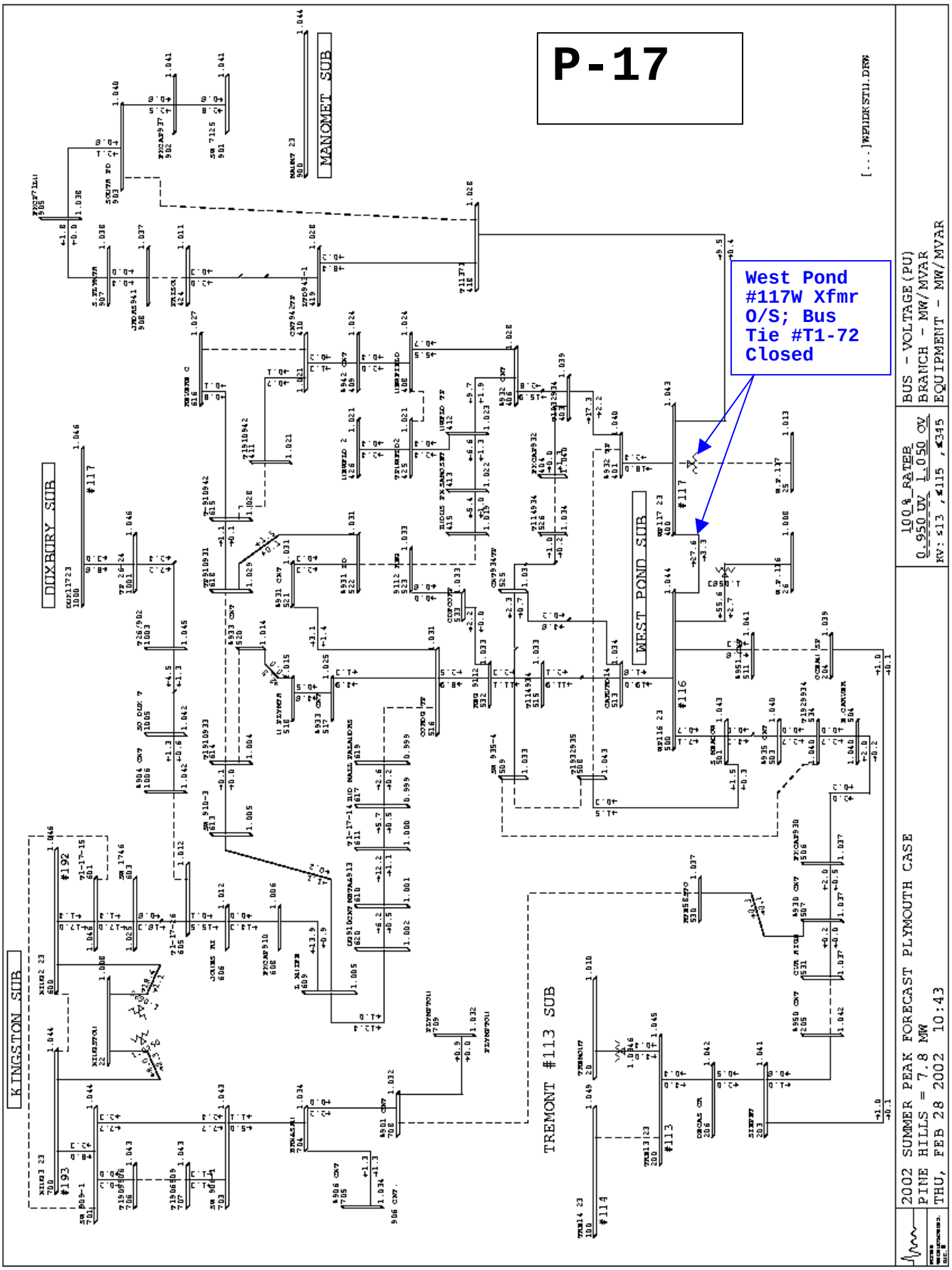
P-17
West Pond #117W Xfmr O/S; Bus Tie #T1-72 Closed
MANOMET SUB
DUXBURY SUB
WEST POND SUB
KINGSTON SUB
TREMONT #113 SUB
100% RATEB
0.950 UV 1.050 OV
KV: ≤13 , ≤115 , ≤345
BUS - VOLTAGE(PU)
BRANCH - MW/MVAR
EQUIPMENT - MW/MVAR
2002 SUMMER PEAK FORECAST PLYMOUTH CASE
PINE HILLS = 7.8 MW
THU, FEB 28 2002 10:43

BULK SUBSTATION DSS LINE SINGLE-CONTINGENCY ANALYSIS

* Coincident Feeder peaks at Forecasted Summer 2002 District Peaks
* Switching Sequences and Effects of Load Transfer Under Coincident Peak Conditions

CIRCUIT NUMBER	COINCIDENT PEAK LOAD (MW)	(MVA)	NUMBER CUSTOMERS	BACKUP CIRCUIT	BACKUP STATION	SWITCHING ACTIONS	BACKUP CKT. LOAD (BEFORE) (MW)	(MVA)	(AFTER) (MW)	(MVA)	SCADA ALARM (MVA)	PROBLEM AREAS
West Pond Substation												
10	7.1	7.1	3915	12	W. Pond 117	CLOSE T1-932-935	18.0	18.2	25.2	25.4	13	#12 Line Flow 95% over 13 MVA SCADA Alarm, and 69% over trip setting. Both apply to 600:5 CT's that have been replaced
						OPEN 1072						Reverse flow through 935-2 recloser
11	1.6	1.6	1263	81	Tremont 113	CLOSE T1-11-81	4.0	4.0	5.7	5.7	14	
						OPEN 1172						
12	18.0	18.2	3900	14	W. Pond 116	CLOSE T1-932-935	19.0	19.1	28.8	28.8	22.4	#14 Line flow 29% over 22.4 MVA SCADA Alarm, and at 100% of 28 MVA LTE for 336 ACSR conductor
						OPEN 1272						
						OPEN 1220 *						
				10	W. Pond 116	CLOSE T1-12-911	7.1	7.1	15.4	15.4	13	#10 Line Flow 18% over 13 MVA SCADA Alarm, just over 15 MVA Trip. Check if these limits are correct for upgraded CT's
						*New field Street						
13	9.5	9.5	1995	71	Manomet	CLOSE T1-22-27	3.2	3.2	13.1	13.1	21.2	
						OPEN 1372						
14	19.2	19.2	4260	12	W. Pond 117	CLOSE T1-12-911	18.0	18.2	38.1	38.4	13	#12 Line Flow 195% over 13 MVA SCADA Alarm, and 156% over trip setting. Both apply to 600:5 CT's that have been replaced
						OPEN 1472						West Pond #117 transformer load 48.4 MVA, 1% over 48 MVA SCADA Alarm Setting
												Reverse flow through 911-2 recloser

Cape & Vineyard District

Bulk Substation Transformer Outages

Distribution Supply Line Outages

Thermal Results and Remedial Switching Actions

2003 T&D OPERATING STUDY
CAPE & VINEYARD DISTRICT

FALMOUTH FPE (115E) TRANSFORMER OUTAGE CONTINGENCY

Federal-Pacific Electric 30/40/50 [56] MVA Transformer Bank

Overload Ratings:

Summer Normal	57 MVA
Summer Emergency	62 MVA
Winter Normal	66 MVA
Winter Emergency	70 MVA

Switching Actions:

Open: Circuit Switcher 11583
Main circuit breaker 11582
Feeder Breaker #9832

Close: Falmouth 23kV bus tie breaker #T1-2
* Tap changers must be in same position, and off.

Tie Switch #T1-98-98 (to Hatchville)

Capacitor Bank breakers 1158c and 1079c.

Mirant's Oak Bluffs Generation dispatched to 7.2 MW output, minimum. 7.2 MW of Mirant's Martha's Vineyard Generation must be dispatched to prevent overload and trip of Falmouth GE transformer bank.

Results:

Reference Diagram **CV-1**.

Loading	No heavy loading conditions were identified.
Voltage	No low voltage conditions were identified.

Additional Actions Required:

None

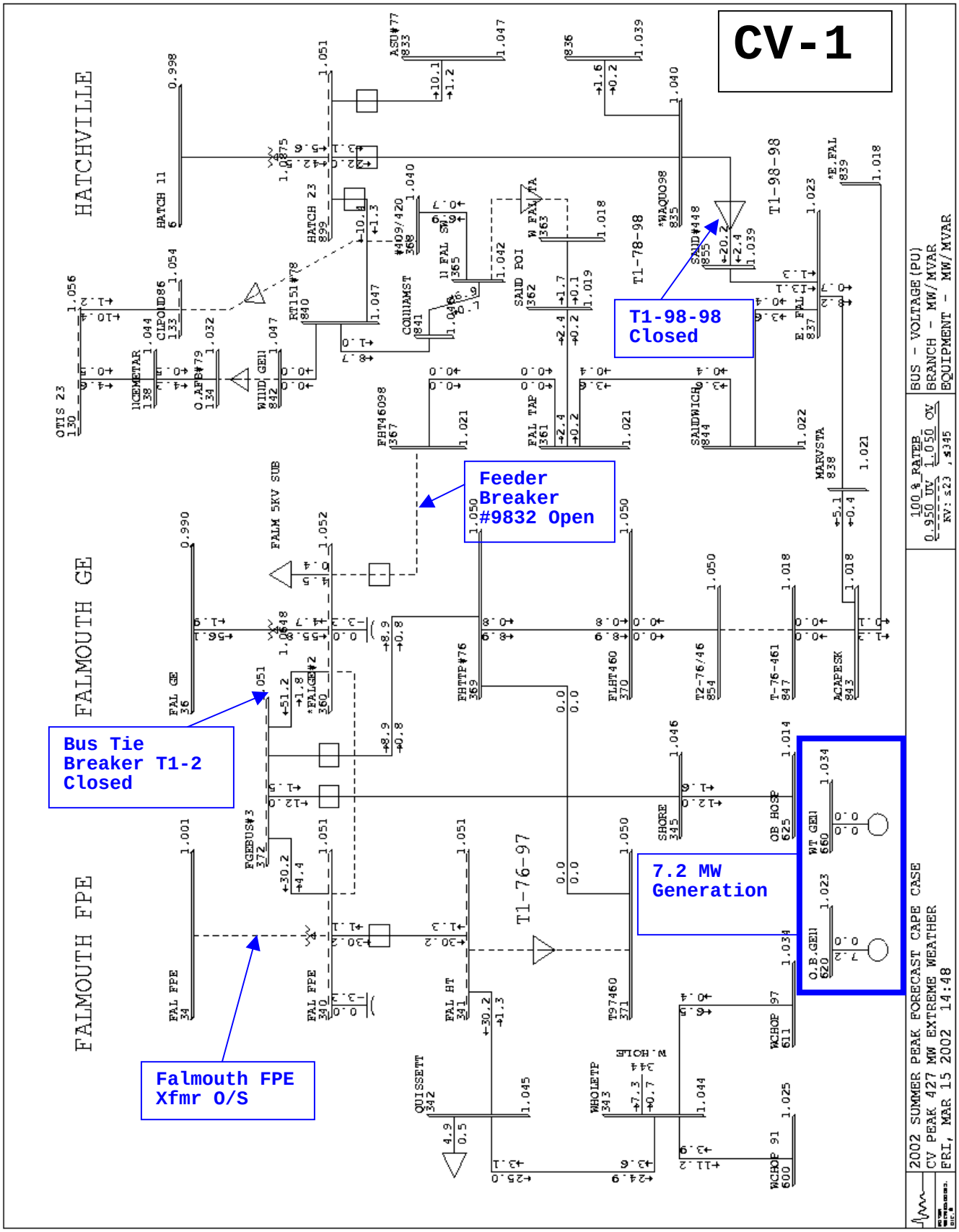
CV-1
HATCHVILLE
FALMOUTH GE
FALMOUTH FPE
T1-98-98
Closed
Feeder
Breaker
#9832 Open
Bus Tie
Breaker T1-2
Closed
7.2 MW
Generation
Falmouth FPE
Xfmr O/S
T1-76-97
T1-78-98
2002 SUMMER PEAK FORECAST CAPE CASE
CV PEAK 427 MW EXTREME WEATHER
FRI, MAR 15 2002 14:48
BUS - VOLTAGE(PU)
BRANCH - MW/MVAR
EQUIPMENT - MW/MVAR

2003 T&D OPERATING STUDY
CAPE & VINEYARD DISTRICT

FALMOUTH GE (107W) TRANSFORMER OUTAGE CONTINGENCY

General Electric 30/40/50 [56] MVA Transformer Bank

Overload Ratings:

Summer Normal	56 MVA
Summer Emergency	61 MVA
Winter Normal	68 MVA
Winter Emergency	72 MVA

Switching Actions:

Open: Circuit Switcher 10793
Main circuit breaker 10792
Feeder Breaker #9832

Close: Falmouth 23kV bus tie breaker #T1-2
* Tap changers must be in same position, and off.

Tie Switch #T1-98-98 (to Hatchville)

Capacitor Bank breakers 1158c and 1079c.

Mirant's Oak Bluffs Generation dispatched to 4.8 MW output, minimum. 4.8 MW of Mirant's Martha's Vineyard Generation must be dispatched to prevent overload and trip of Falmouth GE transformer bank.

Results:

Reference Diagram **CV-2**.

Loading	No heavy loading conditions were identified.
Voltage	No low voltage conditions were identified.

Additional Actions Required:

None

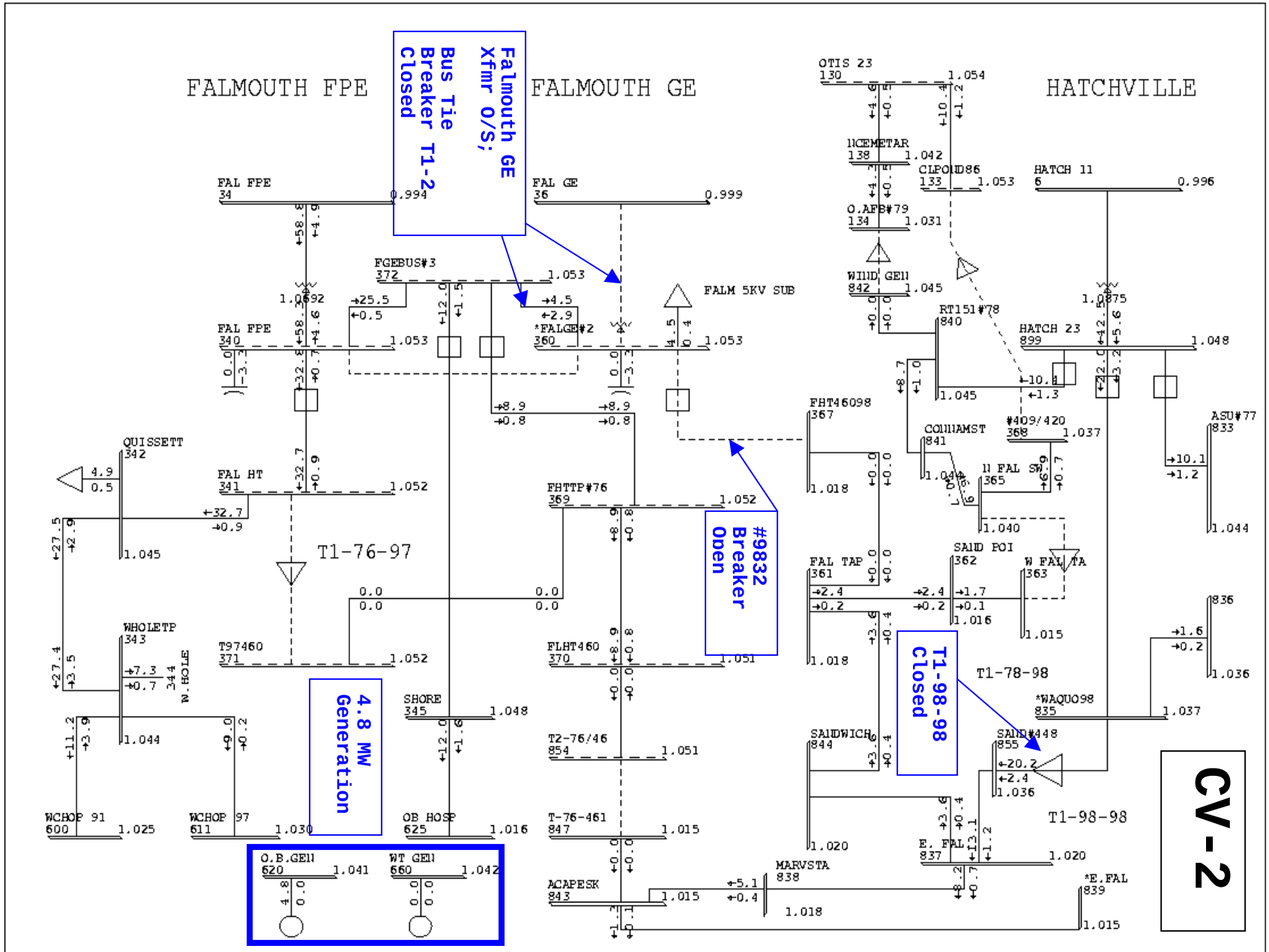

2002 SUMMER PEAK FORECAST CAPE CASE
CV PEAK 427 MW EXTREME WEATHER
FRI, MAR 15 2002 14:55

100 % RATEB
0.950 UV 1.050 OV
KV: ≤23 , ≤345

BUS - VOLTAGE(PU)
BRANCH - MW/MVAR
EQUIPMENT - MW/MVAR

BULK SUBSTATION DSS LINE SINGLE-CONTINGENCY ANALYSIS

* Coincident Feeder peaks at Forecasted Summer 2002 District Peaks
* Switching Sequences and Effects of Load Transfer Under Coincident Peak Conditions

CIRCUIT NUMBER	COINCIDENT PEAK LOAD (MW)	(MVA)	NUMBER CUSTOMERS	BACKUP CIRCUIT	BACKUP STATION	SWITCHING ACTIONS	BACKUP CKT. LOAD (BEFORE) (MW)	(MVA)	(AFTER) (MW)	(MVA)	SCADA ALARM (MVA)	PROBLEM AREAS
Falmouth Substation												
76	8.9	8.9	2488	97	Falmouth FPE	CLOSE T1-76-97	38.1	38.1	47.1	47.2	42	97 Ckt Flow 12% > 42 MVA SCADA Alarm
						OPEN 7632						Dispatch M.V. Gen or sectionalize load
												Falmouth Hts. 461 Ckt. Onto 98 Line.
97	38.1	38.1	14092	76	Falmouth GE	CLOSE T1-76-97	8.9	8.9	38.5	38.6	42	
						OPEN 9732						
						CLOSE T1-76-461						
						OPEN T1-76-76						
				98	Hatchville	CLOSE T1-98-98	8.6	8.6	31.8	32.4	28	#98 Ckt Flow 16% > 28 MVA SCADA Alarm
						OPEN 9832						Transfer Sandpoint / W. Falmouth area
												to #78 line for add'l load relief.
98	13.2	13.3	5714	98	Hatchville	CLOSE T1-98-98	8.6	8.6	22.0	22.2	28	
						OPEN 9832						

Note: Martha's Vineyard #91, #97, and #99 23kV submarine cable outage analyses shown in a separate table

2003 T&D OPERATING STUDY
CAPE & VINEYARD DISTRICT

HARWICH ASEA (119) TRANSFORMER OUTAGE CONTINGENCY

ASEA 30/40/50 [56] MVA Transformer Bank

Overload Ratings:

Summer Normal	59 MVA
Summer Emergency	65 MVA
Winter Normal	70 MVA
Winter Emergency	75 MVA

Note: Pre-Orleans #89 DSS Line Reconfiguration

Switching Actions:

Open: Circuit Switcher 11973
Main circuit breaker 11972
Feeder Breaker #8932

Close: Harwich 23kV bus tie breaker #T3-E-W
* Tap changers must be in same position, and off.

Tie Switch #T1-89-90 (to Hyannis)

Capacitor Bank breakers 1197c and 1187c.

Results:

Reference Diagram **CV-3**.

Loading	No heavy loading conditions were identified.
Voltage	No low voltage conditions were identified.

Note: POST-Orleans #89 DSS Line Reconfiguration

Switching Actions:

Open: Circuit Switcher 11973
Main circuit breaker 11972
Feeder Breaker #8932

Close: Harwich 23kV bus tie breaker #T3-E-W
* Tap changers must be in same position, and off.

Tie Switch #T1-89-90 (to Hyannis)

Capacitor Bank breakers 1197c and 1187c.

Results:

Reference Diagram **CV-3A**.

Loading	No heavy loading conditions were identified.
Voltage	No low voltage conditions were identified.

Additional Actions Required:

None

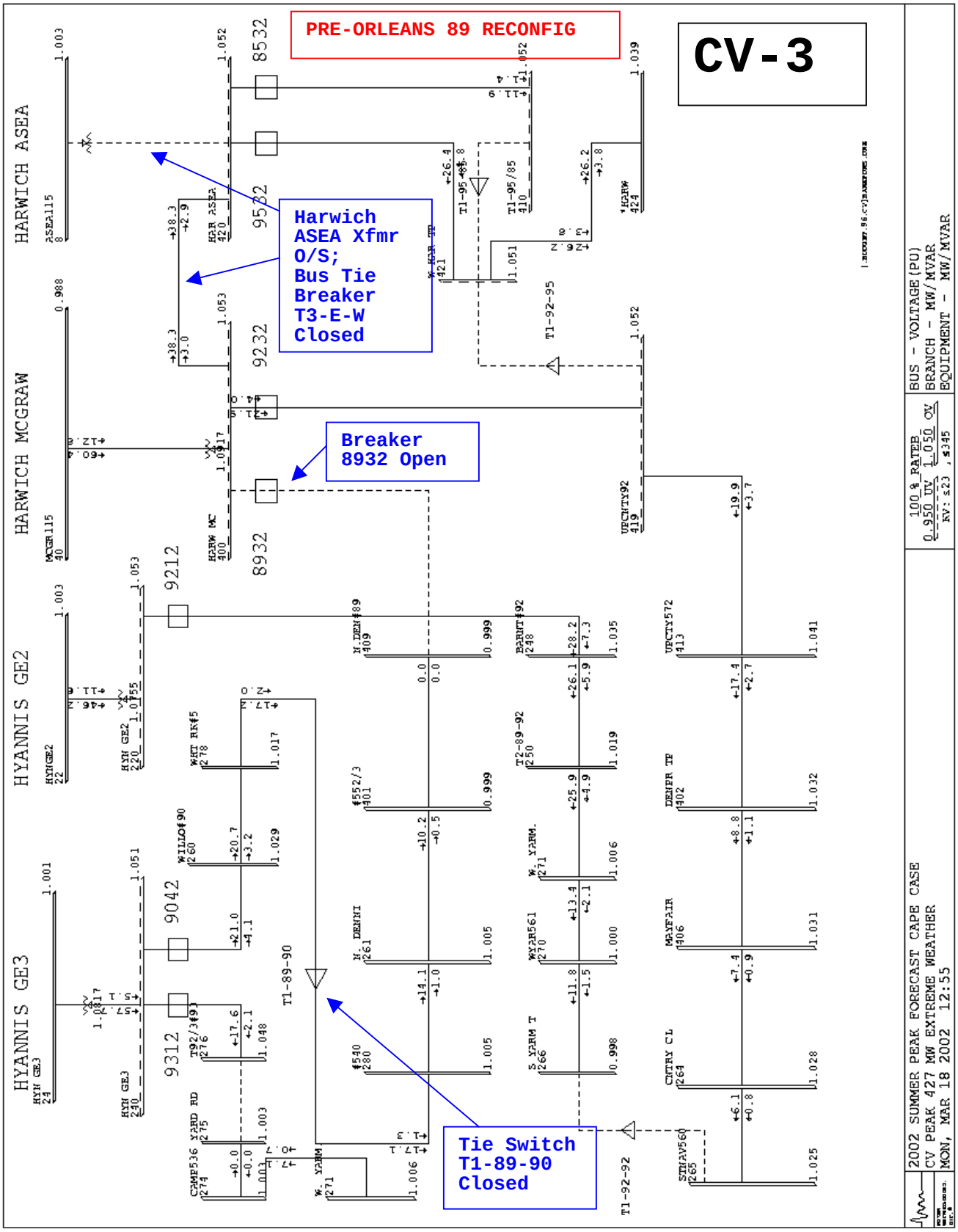
PRE-ORLEANS 89 RECONFIG
CV-3
Harwich ASEA Xfmr O/S; Bus Tie Breaker T3-E-W Closed
Breaker 8932 Open
Tie Switch T1-89-90 Closed
HARWICH ASEA
HARWICH MCGRAW
HYANNIS GE2
HYANNIS GE3
8532
9532
9232
8932
9212
9042
9312
T1-89-90
T1-92-95
T1-92-92
2002 SUMMER PEAK FORECAST CAPE CASE
CV PEAK 427 MW EXTREME WEATHER
MON, MAR 18 2002 12:55
BUS - VOLTAGE(PU)
BRANCH - MW/MVAR
EQUIPMENT - MW/MVAR

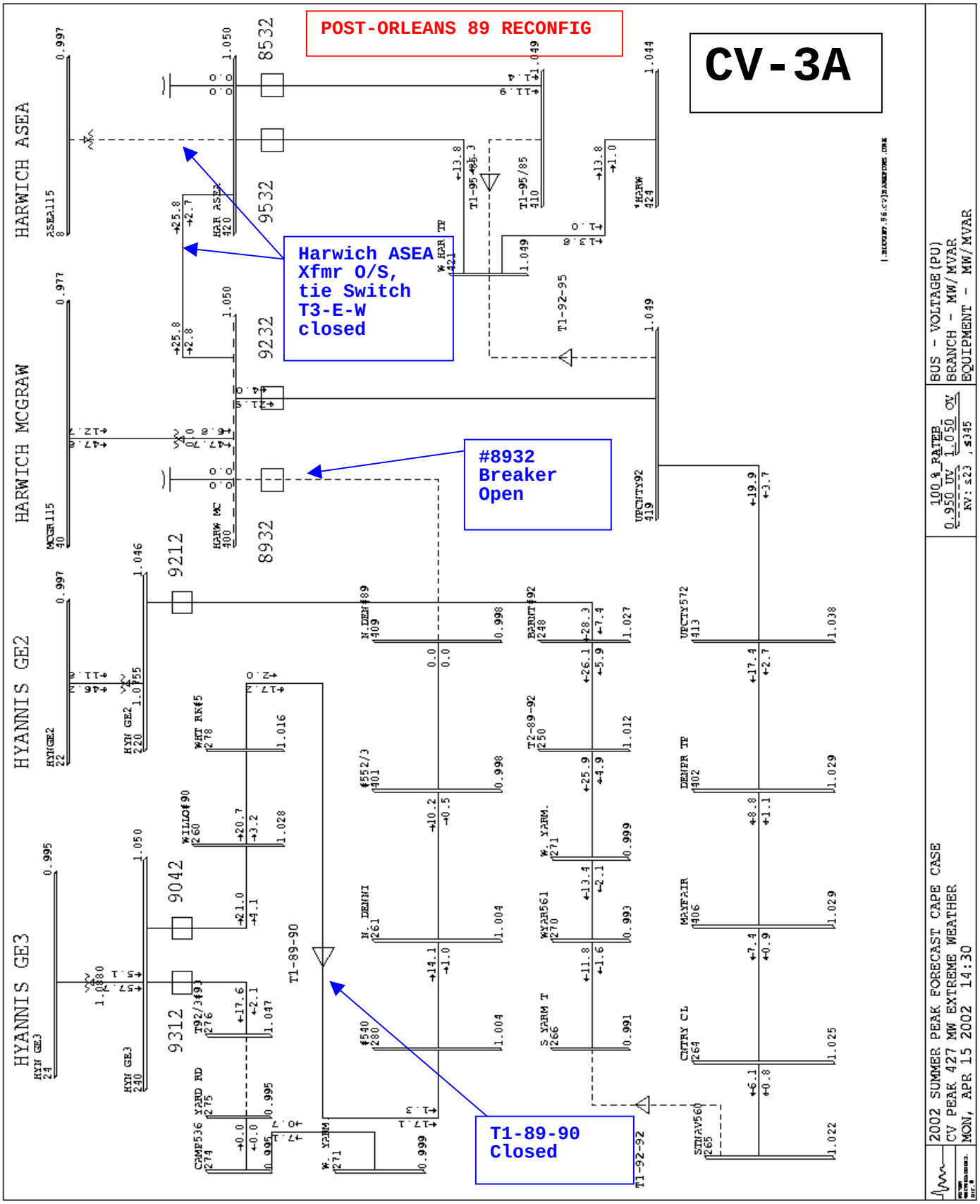
POST-ORLEANS 89 RECONFIG
CV-3A
Harwich ASEA Xfmr O/S, tie Switch T3-E-W closed
#8932 Breaker Open
T1-89-90 Closed
HARWICH ASEA
HARWICH MCGRAW
HYANNIS GE2
HYANNIS GE3
8532
9532
9232
8932
9212
9042
9312
T1-89-90
T1-92-95
T1-92-92
2002 SUMMER PEAK FORECAST CAPE CASE
CV PEAK 427 MW EXTREME WEATHER
MON, APR 15 2002 14:30
BUS - VOLTAGE(PU)
BRANCH - MW/MVAR
EQUIPMENT - MW/MVAR

2003 T&D OPERATING STUDY
CAPE & VINEYARD DISTRICT

HARWICH McGRAW (118) TRANSFORMER OUTAGE CONTINGENCY

McGraw-Edison 30/40/50 [56] MVA Transformer Bank

Overload Ratings:

Summer Normal	64 MVA
Summer Emergency	70 MVA
Winter Normal	76 MVA
Winter Emergency	81 MVA

Note: Pre-Orleans #89 DSS Line Reconfiguration

Switching Actions:

Open: Circuit Switcher 11873
Main circuit breaker 11872
Feeder Breaker #8932

Close: Harwich 23kV bus tie breaker #T3-E-W
* Tap changers must be in same position, and off.
Tie Switch #T1-89-90 (to Hyannis)
Capacitor Bank breakers 1197c and 1187c.

Results:

Reference Diagram **CV-4**.

Loading	No heavy loading conditions were identified.
Voltage	No low voltage conditions were identified.

Note: POST-Orleans #89 DSS Line Reconfiguration

Switching Actions:

Open: Circuit Switcher 11873
Main circuit breaker 11872
Feeder Breaker #8932

Close: Harwich 23kV bus tie breaker #T3-E-W
* Tap changers must be in same position, and off.
Tie Switch #T1-89-90 (to Hyannis)
Capacitor Bank breakers 1197c and 1187c.

Results:

Reference Diagram **CV-4A**.

Loading	No heavy loading conditions were identified.
Voltage	No low voltage conditions were identified.

Additional Actions Required:

None

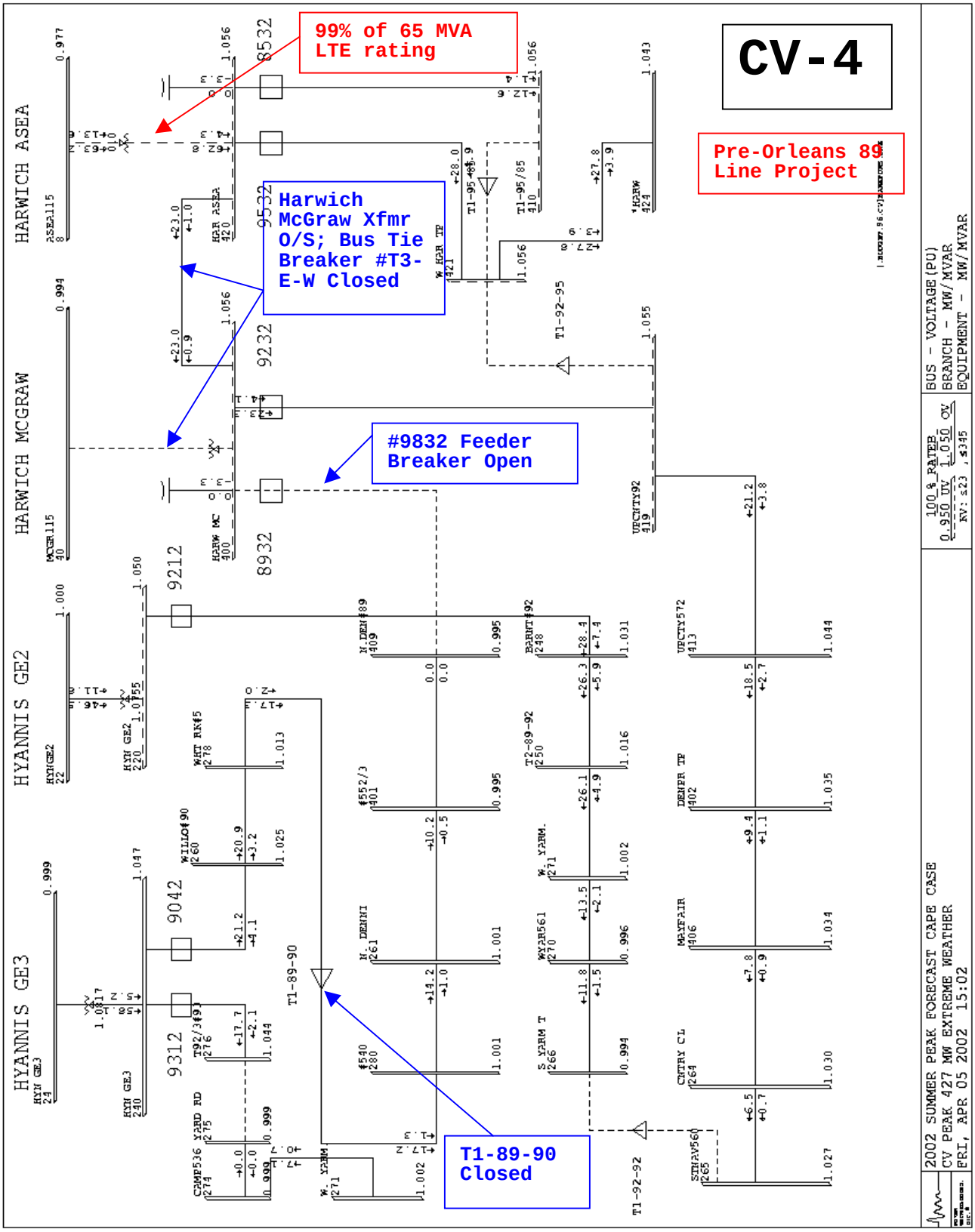
CV-4
99% of 65 MVA LTE rating
Pre-Orleans 89 Line Project
Harwich McGraw Xfmr O/S; Bus Tie Breaker #T3-E-W Closed
#9832 Feeder Breaker Open
T1-89-90 Closed
HARWICH ASEA
HARWICH MCGRAW
HYANNIS GE2
HYANNIS GE3
8532
9532
9232
8932
9212
9042
9312
T1-89-90
T1-92-95
T1-92-92
BUS - VOLTAGE(PU)
BRANCH - MW/MVAR
EQUIPMENT - MW/MVAR
2002 SUMMER PEAK FORECAST CAPE CASE
CV PEAK 427 MW EXTREME WEATHER
FRI, APR 05 2002 15:02

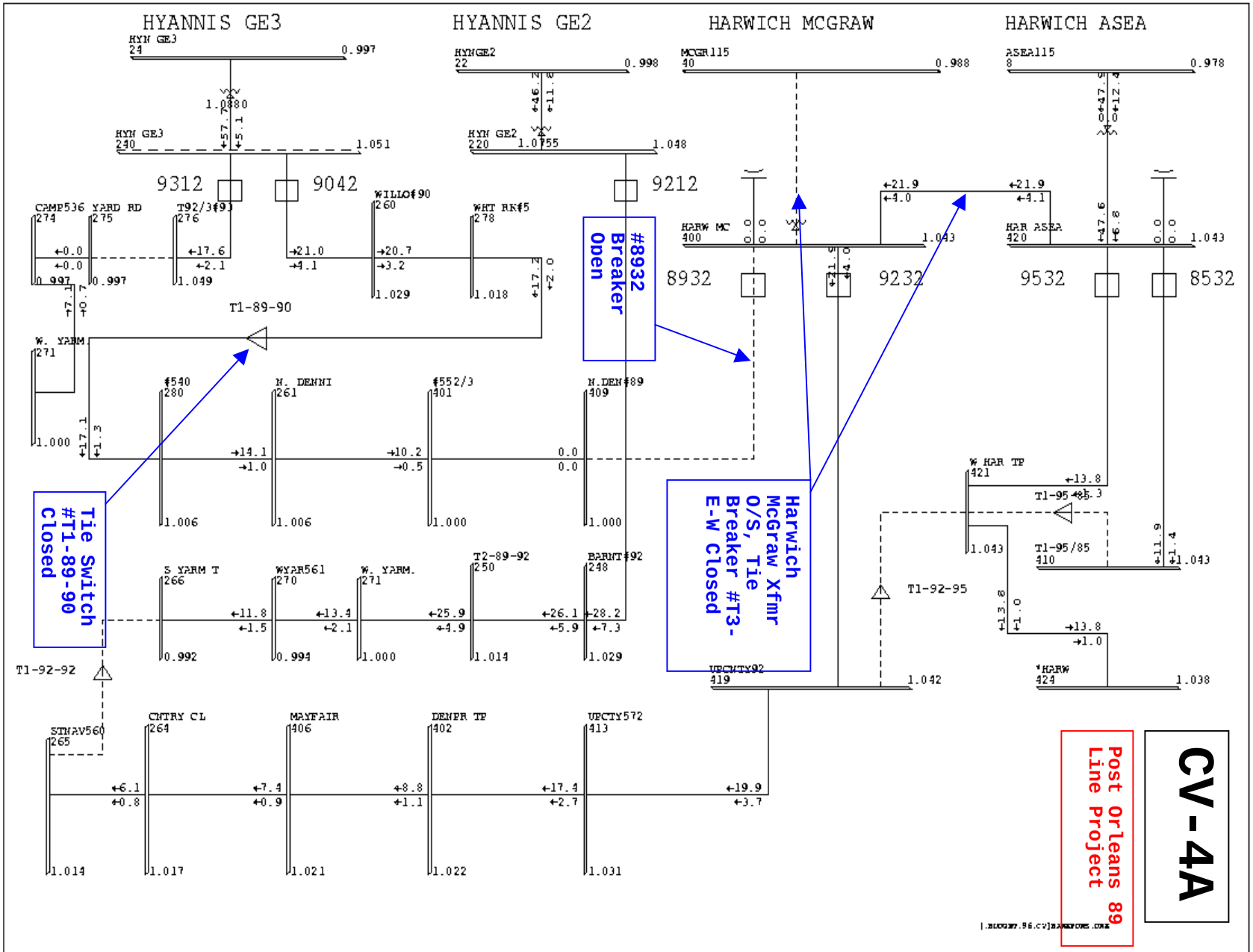
HYANNIS GE3
HYANNIS GE2
HARWICH MCGRAW
HARWICH ASEA
HYN GE3 24 0.997
HYNGE2 22 0.998
MCGR115 40 0.988
ASEA115 8 0.978
HYN GE3 240 1.051
HYN GE2 220 1.048
9312
9042
9212
8932
9232
9532
8532
CAMP536 274
YARD RD 275
T92/3#93 276
WILLO#90 260
WHT RK#5 278
HARW MC 400 1.043
HAR ASEA 420 1.043
T1-89-90
W. YARM 271
#540 280
N. DENNI 261
#552/3 401
N.DEN#89 409
W HAR TP 421
T1-95/85
T1-95/85 410
T1-92-95
S YARM T 266
WYAR561 270
W. YARM. 271
T2-89-92 250
BARNT#92 248
UPCNTY92 419 1.042
*HARW 424 1.038
T1-92-92
STNAV560 265
CNTRY CL 264
MAYFAIR 406
DENPR TP 402
UPCTY572 413
#8932 Breaker Open
Tie Switch #T1-89-90 Closed
Harwich McGraw Xfmr O/S, Tie Breaker #T3-E-W Closed
Post Orleans 89 Line Project
CV-4A
2002 SUMMER PEAK FORECAST CAPE CASE
CV PEAK 427 MW EXTREME WEATHER
MON, APR 15 2002 14:33
100 % RATED
0.950 UV 1.050 OV
KV: ≤23 , ≤345
BUS - VOLTAGE (PU)
BRANCH - MW/MVAR
EQUIPMENT - MW/MVAR

BULK SUBSTATION DSS LINE SINGLE-CONTINGENCY ANALYSIS

* Coincident Feeder peaks at Forecasted Summer 2002 District Peaks
* Switching Sequences and Effects of Load Transfer Under Coincident Peak Conditions

CIRCUIT NUMBER	COINCIDENT PEAK LOAD (MW)	(MVA)	NUMBER CUSTOMERS	BACKUP CIRCUIT	BACKUP STATION	SWITCHING ACTIONS	BACKUP CKT. LOAD (BEFORE) (MW)	(MVA)	(AFTER) (MW)	(MVA)	SCADA ALARM (MVA)	PROBLEM AREAS
Harwich Substation												
89	14.3	14.4	9221	90	Hyannis	CLOSE T1-89-90	6.4	6.5	21.0	21.4	32	Not affected by Orleans 89 reconfiguration
						OPEN 8932						
92, 95, 85 DSS Contingencies, Pre Orleans 89 Reconfiguration												
92	21.9	22.3	9899	95	Harwich	CLOSE T1-92-95	26.4	26.8	48.3	49.1	34	95 Ckt Flow 44% > 34 MVA Alarm, 23% >
						OPEN 9232						40 MVA trip setting, 95% of 49 MVA LTE Rtg.
						CLOSE 1197C						Note: Swap Chatham onto Orleans
95	26.4	26.8	13924	92	Harwich	CLOSE T1-92-95	21.9	22.3	48.3	49.1	34	#92 Ckt Flow 44% > 34 MVA Alarm, 23% >
						OPEN 9532						40 MVA Trip Setting, 100% of 49 MVA LTE Rt
						CLOSE 1187C						Note: Swap Chatham onto Orleans
85	11.9	12.0	4156	95	Harwich	CLOSE T1-85-95	26.4	26.8	38.3	38.8	34	95 Ckt Flow 14% > 34 MVA SCADA Alarm
						OPEN 8532						Note: Swap Chatham onto Orleans
92, 95, 85 DSS Contingencies, POST Orleans 89 Reconfiguration												
92	21.9	22.3	11823	95	Harwich	CLOSE T1-92-95	13.8	13.9	35.8	36.2	34	95 Ckt Flow 6% > 34 MVA Alarm
						OPEN 9232						
						CLOSE 1197C						
95	13.8	13.9	13924	92	Harwich	CLOSE T1-92-95	21.9	22.3	35.7	36.1	34	95 Ckt Flow 6% > 34 MVA Alarm
						OPEN 9532						
						CLOSE 1187C						
85	11.9	12.0	4156	95	Harwich	CLOSE T1-85-95	13.8	13.9	25.8	25.9	34	
						OPEN 8532						

2003 T&D OPERATING STUDY
CAPE & VINEYARD DISTRICT

HATCHVILLE TRANSFORMER OUTAGE CONTINGENCY

MAGNETEK 30/40/50 [56] MVA Transformer Bank

Overload Ratings:

Summer Normal	59 MVA
Summer Emergency	64 MVA
Winter Normal	68 MVA
Winter Emergency	72 MVA

Switching Actions:

Open: Circuit Switcher 11533 (at Hatchville)
Main circuit breaker 11532 (at Hatchville)
Feeder Breaker #7712 (at Hatchville)
Feeder Breaker #9812 (at Hatchville)
Feeder Breaker #8152 (at Otis)
Switch 8896 (#88 Line ROW W. of Osterville Tap)

Close: Tie Switch #T1-77-77 (to Mashpee)
Tie Switch #T1-88-88 (Mashpee to Hyannis)
Tie Switch #T1-81-81 (Otis to Sandwich)
Tie Switch #T1-98-98 (to Falmouth)
Tie Switch #T2-406-409 (ties #78 feeder to Otis #86 feeder) ****

Capacitor Bank breaker 1153c (at Hatchville)
Capacitor Bank breaker 1075c (at Otis)
Capacitor Bank breaker 1156c (at Mashpee)
Capacitor Bank breaker 1244c (at Hyannis GE #2)

**** DO NOT USE the 79 / 78 DSS line tie switch #7872 at the Otis Air Base Sub to perform this transfer.

Results:

**** Load Transfer of 88 line to Hyannis must be performed FIRST.

Load Transfer of #81 DSS line to Sandwich must be performed FIRST. Hatchville 3 MVAR capacitor bank in-service, at end of line, for voltage control on tied 86 – 78 lines. #409 Circuit recloser in Pocasset will see reverse power flow.

*****Additional load relief for Hyannis GE#2, by transferring a portion of the #92 DSS line to Harwich, may be required.

Reference Diagrams **CV-5 through CV-7**.

Loading - Hyannis GE#2 transformer may experience heavy loading conditions, but will be within 98% of LTE rating. Additional load transfer of a portion of the #92 DSS line to Harwich may be prudent:

Open: Sw. #9209 (W. of 561 ckt. Tap)
Close: T1-92-92 (Hyannis 92 line to Harwich)

The Otis 81 DSS line must be transferred to Sandwich BEFORE the 78 line is transferred to Otis.

The Mashpee 88 switching to Hyannis must be conducted BEFORE the 77 line is transferred to Mashpee.

All recommended station capacitors listed above (Hatchville, Otis, Mashpee, Hyannis) required for reactive flow mitigation through transformers. Hatchville bank required for voltage drop mitigation on tied 78 – 86 circuits.

Voltage - No low voltage conditions identified.

Additional Actions Required:

Construct OAK STREET substation for 2003 Summer peak.

CV-5

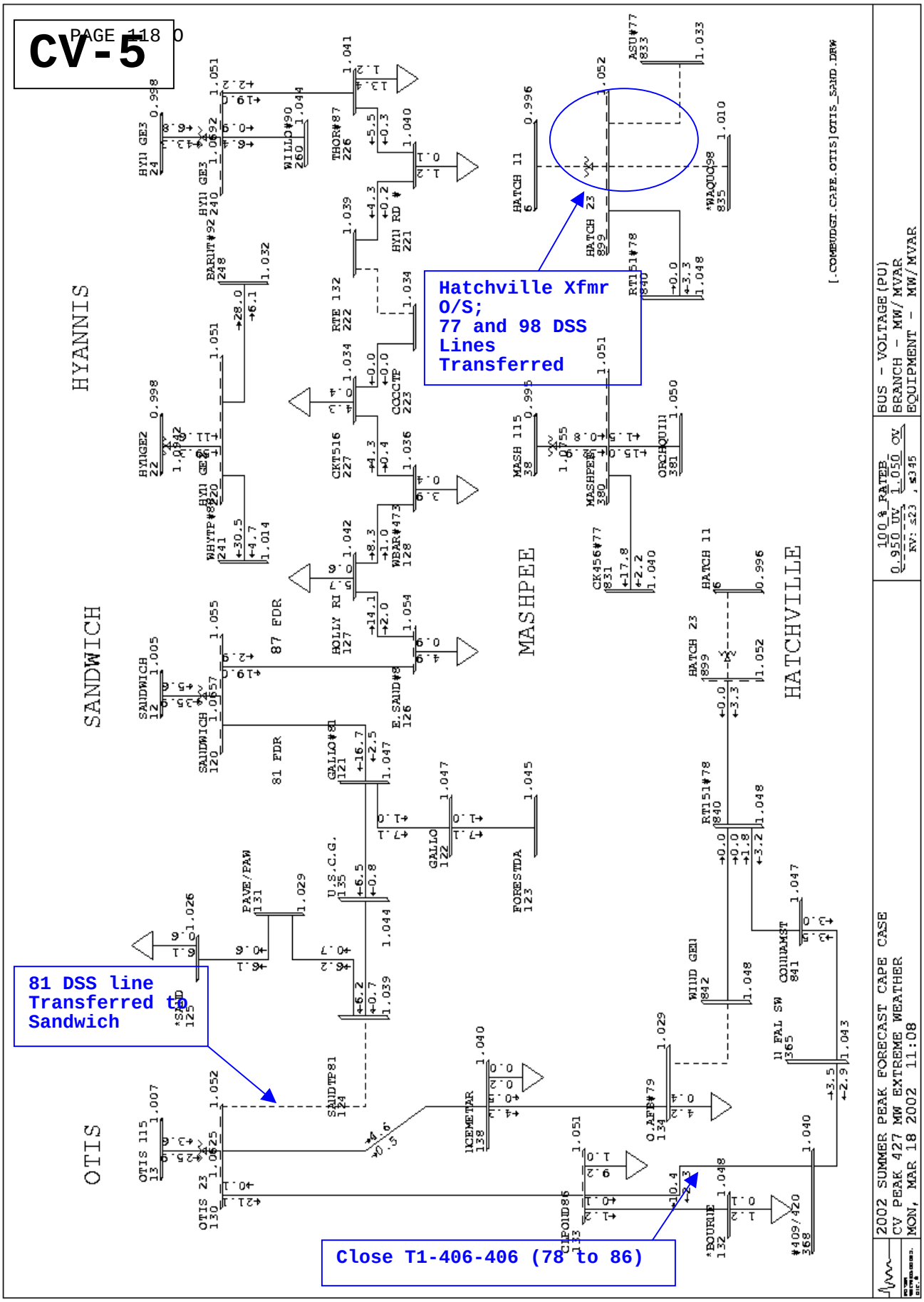
HYANNIS
SANDWICH
MASHPEE
HATCHVILLE
OTIS
87 FDR
81 FDR
Hatchville Xfmr O/S; 77 and 98 DSS Lines Transferred
81 DSS line Transferred to Sandwich
Close T1-406-406 (78 to 86)
2002 SUMMER PEAK FORECAST CAPE CASE
CV PEAK 427 MW EXTREME WEATHER
MON, MAR 18 2002 11:08
BUS - VOLTAGE(PU)
BRANCH - MW/MVAR
EQUIPMENT - MW/MVAR

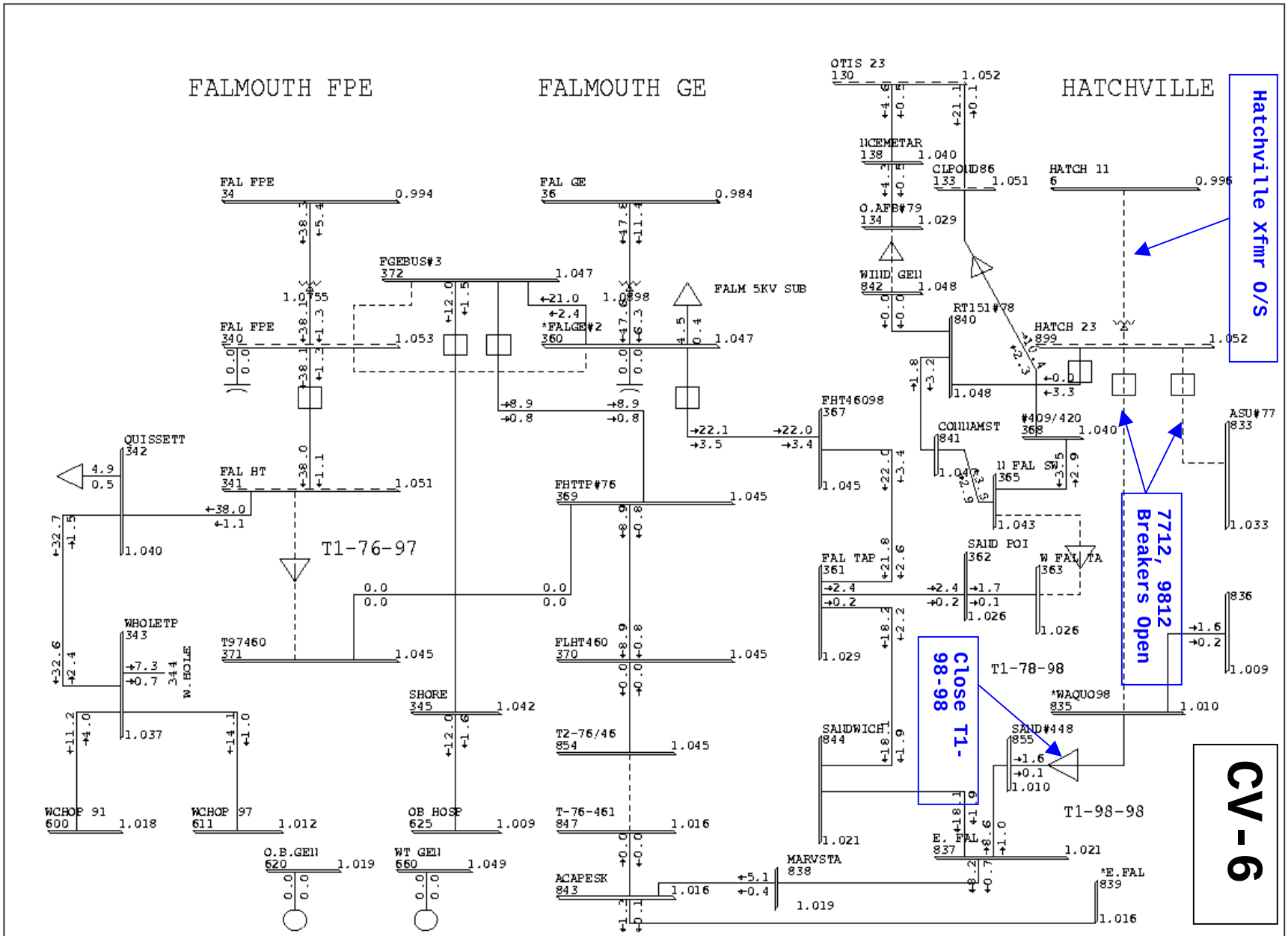

2002 SUMMER PEAK FORECAST CAPE CASE
CV PEAK 427 MW EXTREME WEATHER
MON, MAR 18 2002 11:09

100 % RATEB
0.950 UV 1.050 OV
KV: ≤23 , ≤345

BUS - VOLTAGE(PU)
BRANCH - MW/MVAR
EQUIPMENT - MW/MVAR

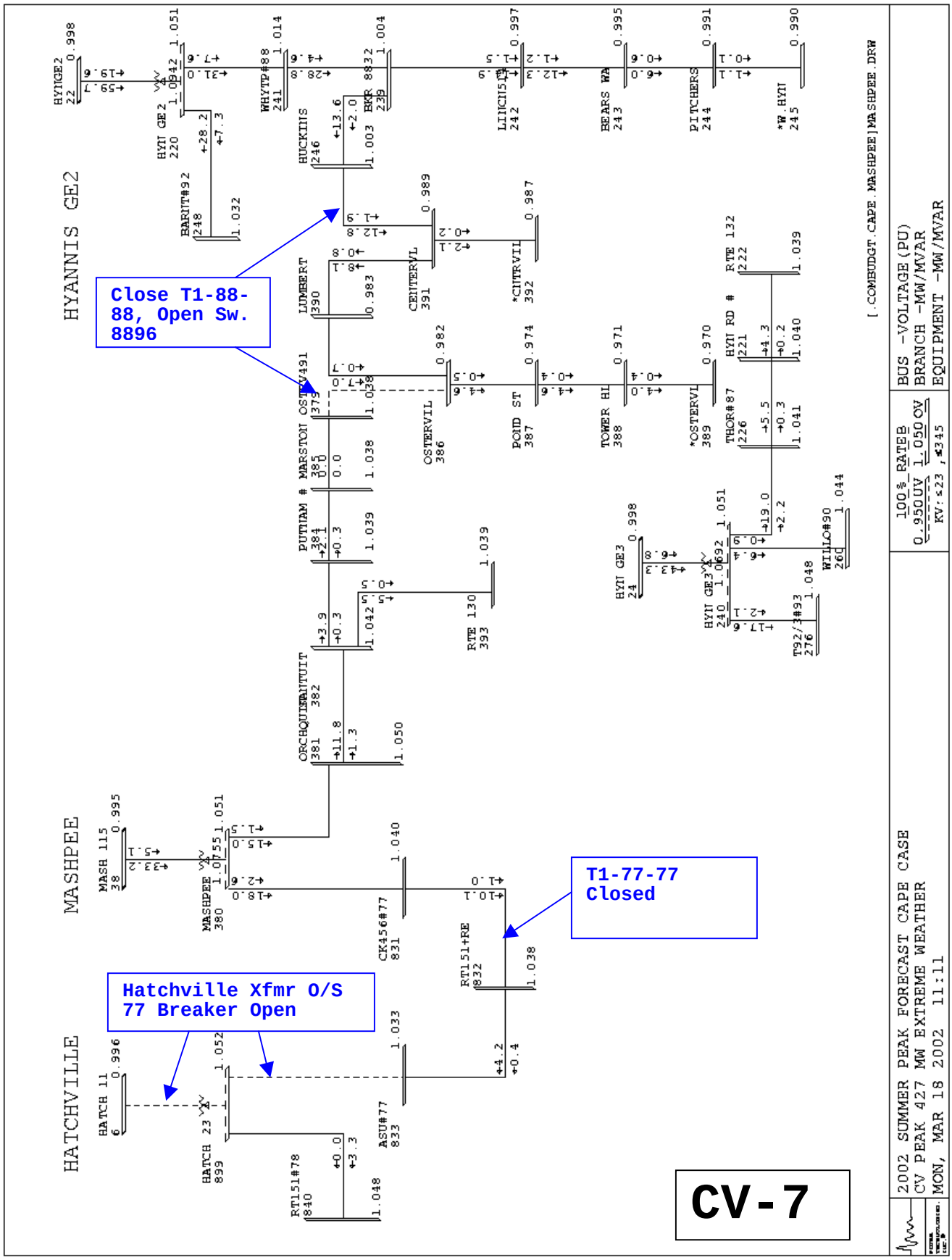
HYANNIS GE2
MASHPEE
HATCHVILLE
Close T1-88-88, Open Sw. 8896
T1-77-77 Closed
Hatchville Xfmr O/S 77 Breaker Open
CV-7
2002 SUMMER PEAK FORECAST CAPE CASE
CV PEAK 427 MW EXTREME WEATHER
MON, MAR 18 2002 11:11
BUS -VOLTAGE(PU)
BRANCH -MW/MVAR
EQUIPMENT -MW/MVAR
100% RATEB
0.950UV 1.050OV
KV:≤23 ,≤345
[.COMBUDGT.CAPE.MASHPEE]MASHPEE.DRW

BULK SUBSTATION DSS LINE SINGLE-CONTINGENCY ANALYSIS

* Coincident Feeder peaks at Forecasted Summer 2002 District Peaks
* Switching Sequences and Effects of Load Transfer Under Coincident Peak Conditions

CIRCUIT NUMBER	COINCIDENT PEAK LOAD (MW)	(MVA)	NUMBER CUSTOMERS	BACKUP CIRCUIT	BACKUP STATION	SWITCHING ACTIONS	BACKUP CKT. LOAD (BEFORE) (MW)	(MVA)	(AFTER) (MW)	(MVA)	SCADA ALARM (MVA)	PROBLEM AREAS
Hatchville Substation												
77	10.1	10.2	4135	77	Mashpee	CLOSE T1-77-77 OPEN 7712	7.7	7.8	18.2	18.4	34	
				88	Hyannis	CLOSE T1-88-88 OPEN 9986	17.6	17.7	31.0	31.9	34	Hyannis GE#2 Transformer 98% of LTE Rtg., 3% over 60 MVA Trip setting Additional Switching to HARWICH req'd
78	10.4	10.5	5086	98	Falmouth GE	CLOSE T1-78-89 OPEN 7812	13.2	13.3	24.1	24.5	33	
98	8.6	8.6	5653	98	Falmouth GE	CLOSE T1-98-98 OPEN 9812	13.2	13.3	22.1	22.4	33	

2003 T&D OPERATING STUDY
CAPE & VINEYARD DISTRICT

HYANNIS GE #1 (#123) TRANSFORMER OUTAGE CONTINGENCY

General Electric 45/65/75 [84] MVA Transformer Bank

Overload Ratings:

Summer Normal	87 MVA
Summer Emergency	95 MVA
Winter Normal	99 MVA
Winter Emergency	106 MVA

Switching Actions:

Open: Circuit Switcher 12343
Main circuit breaker 12342
Feeder Breaker #9042 (at Hyannis)
Switch #9209 (92 line W. of 561 ckt. Tap)

Close: Hyannis 23kV bus tie breaker #T1-E-W
* Tap changers must be in same position, and off.

Tie Switch #T1-89-90 (to Harwich McGraw)
Tie Switch #T1-92-92 (a portion of #92 line to Harwich McGraw)

Capacitor Bank breakers 1234c, 1244c, and 1187c

Notice: Transfers to Harwich of the #90 line and the portion of the #92 line must be accomplished BEFORE closing Hyannis bus tie breaker, or you will trip the other bank on overload.

Additional load transfer of the #87 DSS line to Sandwich can be accomplished, at risk of overloading the underground cable getaway emanating Sandwich Substation:

Open: 8712 breaker (at Hyannis)
Close: Tie Switch T1-87-87 (to Sandwich)

Results:

Load in the Barnstable-Sandwich-Mashpee-Yarmouth area may have to be shed to respect transformer LTE limits. Additional load transfer to Sandwich will reduce loading on remaining Hyannis bank, at risk of overloading underground cable getaway on Sandwich #87 DSS line. Hyannis 23kV bus tie breaker T1-E-W sees a flow of 32.0 MVA.

Harwich McGraw (#118) transformer load increased from 36.2 MW / 37.3 MVA to 57.2 MW / 60.4 MVA.

Reference Diagram **CV-8**.

Loading - Hyannis GE #1 transformer may experience heavy loading conditions exceeding the 64 MVA LTE rating; additional load can be transferred to Sandwich, at risk of heavy loading condition on a short segment of 1250 kcmil underground cable getaway emanating the station that may require an upgrade/reconductoring of the feeder section.

Voltage - No low voltage conditions were identified.

Additional Actions Required:

Construct Oak Street Substation prior to Summer 2003 load period. This will permit transfer of 87 and 88 lines to the new station, preventing overload of the Hyannis bank and negating the need to transfer two DSS lines to Harwich, subsequently avoiding the near-overload of that station as well.

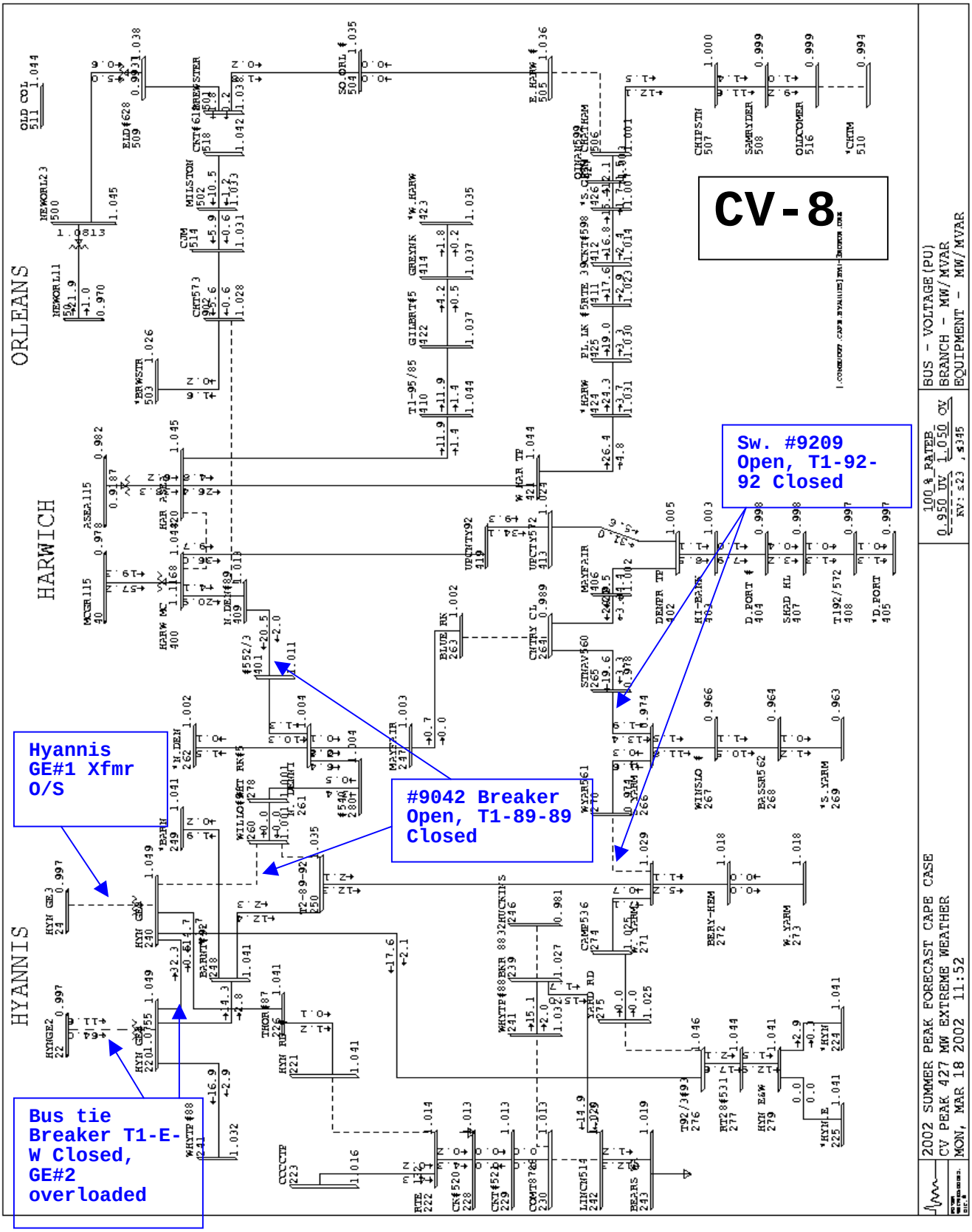
CV-8
Sw. #9209 Open, T1-92-92 Closed
#9042 Breaker Open, T1-89-89 Closed
Hyannis GE#1 Xfmr O/S
Bus tie Breaker T1-E-W Closed, GE#2 overloaded
ORLEANS
HARWICH
HYANNIS
BUS - VOLTAGE(PU)
BRANCH - MW/MVAR
EQUIPMENT - MW/MVAR
2002 SUMMER PEAK FORECAST CAPE CASE
CV PEAK 427 MW EXTREME WEATHER
MON, MAR 18 2002 11:52

2003 T&D OPERATING STUDY
CAPE & VINEYARD DISTRICT

HYANNIS GE #2 (#124) TRANSFORMER OUTAGE CONTINGENCY

General Electric 30/40/50 [56] MVA Transformer Bank

Overload Ratings:

Summer Normal	59 MVA
Summer Emergency	64 MVA
Winter Normal	68 MVA
Winter Emergency	72 MVA

Switching Actions:

Open: Circuit Switcher 12443
Main circuit breaker 12442
Feeder Breaker #9042 (at Hyannis)
Switch #9209 (92 line W. of 561 ckt. Tap)

Close: Hyannis 23kV bus tie breaker #T1-E-W
* Tap changers must be in same position, and off.

Tie Switch #T1-89-90 (to Harwich McGraw)
Tie Switch #T1-92-92 (a portion of #92 line to Harwich McGraw)

Capacitor Bank breakers 1234c, 1244c, and 1187c, as necessary for reactive power control through Hyannis and Harwich substation transformers.

Results:

Reference Diagram **CV-9**.

Loading	No heavy loading conditions were identified.
Voltage	No low voltage conditions were identified.

Additional Actions Required:

Construct Oak Street Substation prior to Summer 2003 load period.

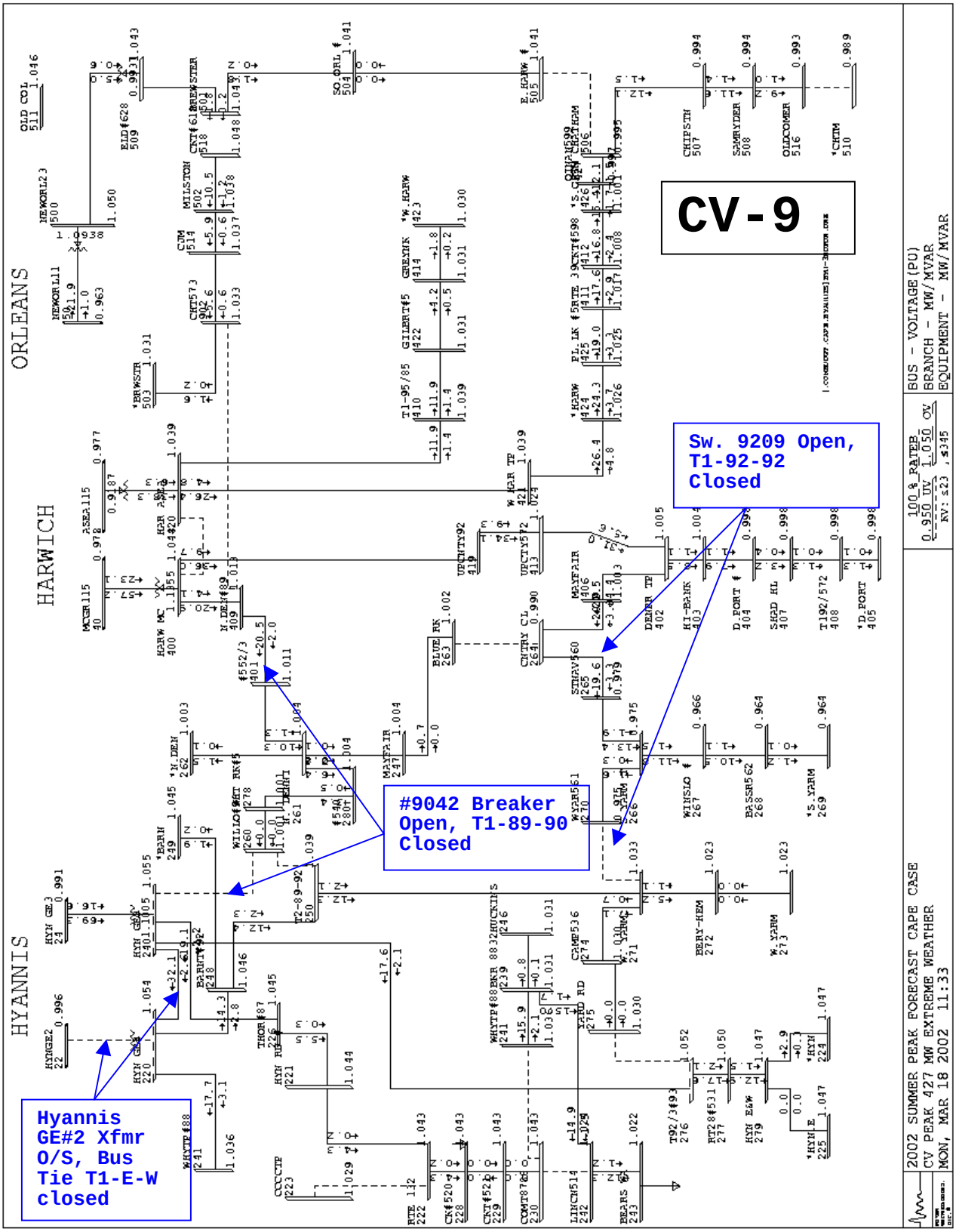
CV-9
Sw. 9209 Open, T1-92-92 Closed
#9042 Breaker Open, T1-89-90 Closed
Hyannis GE#2 Xfmr O/S, Bus Tie T1-E-W closed
ORLEANS
HARWICH
HYANNIS
2002 SUMMER PEAK FORECAST CAPE CASE
CV PEAK 427 MW EXTREME WEATHER
MON, MAR 18 2002 11:33
BUS - VOLTAGE(PU)
BRANCH - MW/MVAR
EQUIPMENT - MW/MVAR

BULK SUBSTATION DSS LINE SINGLE-CONTINGENCY ANALYSIS

* Coincident Feeder peaks at Forecasted Summer 2002 District Peaks
* Switching Sequences and Effects of Load Transfer Under Coincident Peak Conditions

CIRCUIT NUMBER	COINCIDENT PEAK LOAD (MW)	(MVA)	NUMBER CUSTOMERS	BACKUP CIRCUIT	BACKUP STATION	SWITCHING ACTIONS	BACKUP CKT. LOAD (BEFORE) (MW)	(MVA)	(AFTER) (MW)	(MVA)	SCADA ALARM (MVA)	PROBLEM AREAS
Hyannis Substation												
87	19.0	19.1	2283	88	Hyannis GE2	CLOSE T1-87-88	17.6	17.7	37.4	38.3	34	#88 Ckt Flow 13% > 34 MVA SCADA Alarm
						OPEN 8712						
88	17.6	17.7	7296	87	Hyannis GE1	CLOSE T1-87-88	19.0	19.2	36.6	36.9	34	#87 Ckt Flow 9% > 34 MVA SCADA Alarm
						OPEN 8812						
90	6.4	6.5	3383	89	Harwich McG	CLOSE T1-89-90	14.3	14.4	20.9	21.3	31	
						OPEN 9042 (?*)						
92	28.2	29.1	11229	90	Hyannis GE1	CLOSE T2-90-92	6.4	6.5	20.9	21.3	32	
						OPEN 9212 BKR						
						OPEN 9209 SW						
				92	Harwich McG	CLOSE T1-92-92	21.9	22.3	36.1	37.4	34	Harwich #92 Ckt Flow 10% > 34 MVA Alarm
93	17.6	17.7	4128	92	Hyannis GE2	CLOSE T1-92-93	28.2	29.1	33.0	34.4	34	Hyannis #92 Ckt Flow 100% of 34 MVA Alarm
						OPEN 9312 BKR						
				92	Harwich McG	OPEN 9209 SW	21.9	22.3	36.0	37.3	34	Harwich #92 Ckt Flow 10% > 34 MVA
						CLOSE T1-92-92						SCADA Alarm

* Cape Switching Plan may have incorrect breaker number

2003 T&D OPERATING STUDY
CAPE & VINEYARD DISTRICT

MASHPEE TRANSFORMER OUTAGE CONTINGENCY

Moloney 20/26/33 MVA Transformer Bank

Overload Ratings:

Summer Normal	35 MVA
Summer Emergency	38 MVA
Winter Normal	42 MVA
Winter Emergency	45 MVA

Switching Actions (Summer Peak Load, All-Lines-In Condition):

Open: Switch #8896 (#88 Line W. of Osterville Tap)

Close: Tie Switch #T1-88-88 (portion of #88 line to Hyannis)

Switching to be performed prior to occurrence of Summer peak loading conditions, to prevent Mashpee transformer from exceeding 35 MVA normal Summer rating.

At forecasted load levels, this switching may cause the Hyannis GE#2 transformer to exceed SCADA alarm and trip settings. If this occurs, a transfer of a portion of the #92 DSS line to Harwich is then recommended:

Open: Switch #9209 (#92 Line W. of #561 Ckt. Tap)

Close: Tie Switch #T1-92-92 (portion of #92 line to Harwich McGraw)

Switching Actions (Contingency Outage):

Open: Circuit Switcher 11563
Main circuit breaker 11562
Switch #8896 (#88 Line W. of Osterville Tap) *
Feeder Breaker #9812 (at Hatchville)
Switch #9209 (Hyannis to Harwich #92 DSS line) **

Close: Tie Switch #T1-77-77 (tie through Mashpee bus to Hatchville #77 line)
Tie Switch #T1-88-88 (portion of #88 line to Hyannis) *
Tie Switch #T1-98-98 (transfers #98 line from Hatchville to Falmouth)
Tie Switch #T1-92-92 (transfers portion of #92 line, Hyannis to Harwich) **

Capacitor Bank breakers 1156c, 1244c.

* Post contingency of Mashpee transformer, the identified switching actions would already have been performed during Summer peak loading conditions.

** The transfer of the #92 DSS line to Harwich must be accomplished before the transfer of the #88 DSS line from Mashpee to Hyannis, to prevent tripping Hyannis GE#2 transformer due to its 60 MVA trip setting.

Results:

Reference Diagram **CV-10**, **CV-11**, and **CV-12**.

Loading	No heavy loading conditions were identified.
Voltage	No low voltage conditions were identified.

Additional Actions Required:

Construct Oak Street Substation prior to Summer 2003 load period.

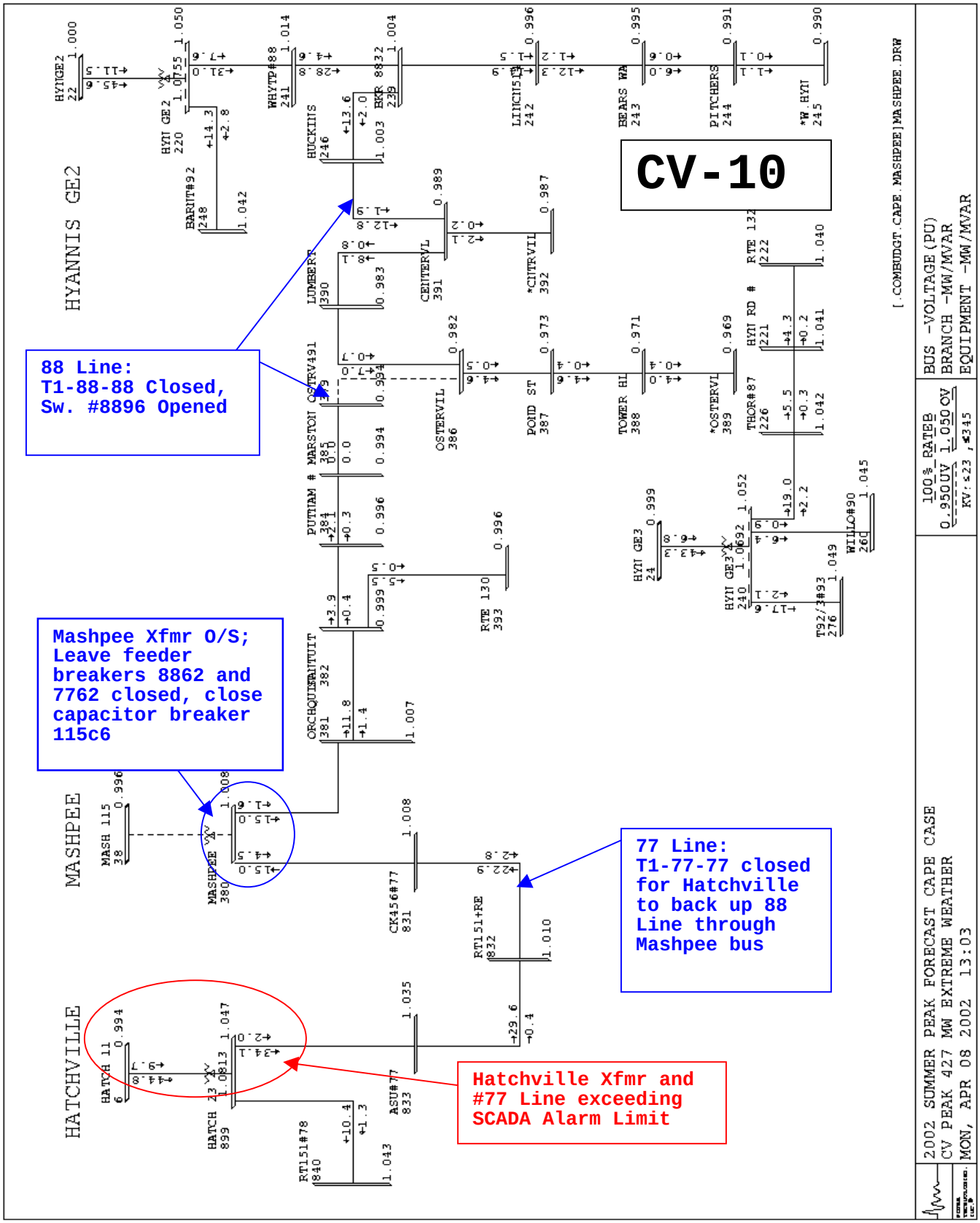
CV-10
88 Line:
T1-88-88 Closed,
Sw. #8896 Opened
Mashpee Xfmr O/S;
Leave feeder
breakers 8862 and
7762 closed, close
capacitor breaker
115c6
77 Line:
T1-77-77 closed
for Hatchville
to back up 88
Line through
Mashpee bus
Hatchville Xfmr and
#77 Line exceeding
SCADA Alarm Limit
HYANNIS GE2
MASHPEE
HATCHVILLE
2002 SUMMER PEAK FORECAST CAPE CASE
CV PEAK 427 MW EXTREME WEATHER
MON, APR 08 2002 13:03
BUS -VOLTAGE(PU)
BRANCH -MW/MVAR
EQUIPMENT -MW/MVAR
100% RATEB
0.950UV 1.050OV
KV:≤23 ,≥345
[.COMBUDGT.CAPE.MASHPEE]MASHPEE.DRW

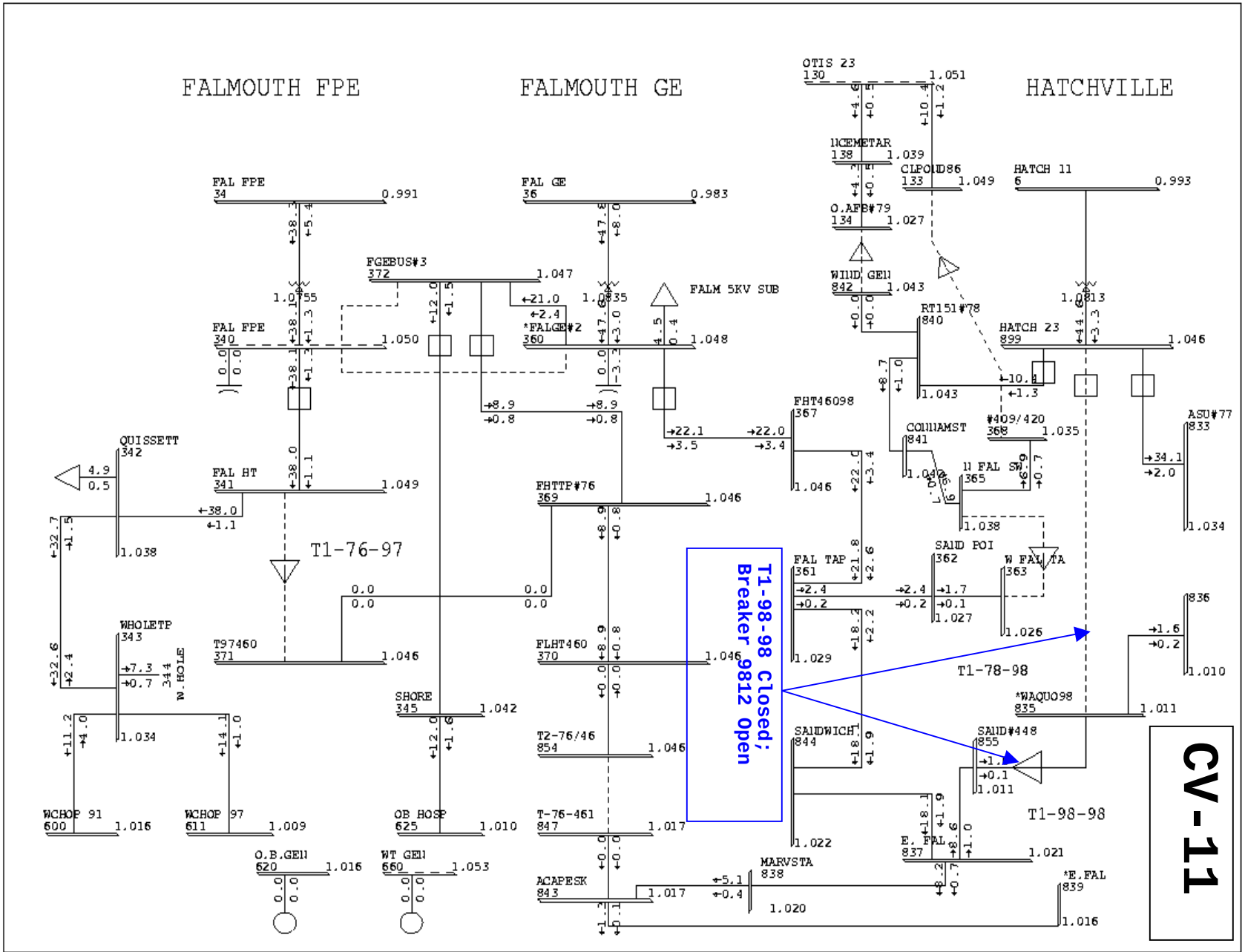

2002 SUMMER PEAK FORECAST CAPE CASE
CV PEAK 427 MW EXTREME WEATHER
MON, APR 08 2002 12:55

100 % RATEB
0.950 UV 1.050 OV
KV: ≤23 , ≤345

BUS - VOLTAGE(PU)
BRANCH - MW/MVAR
EQUIPMENT - MW/MVAR

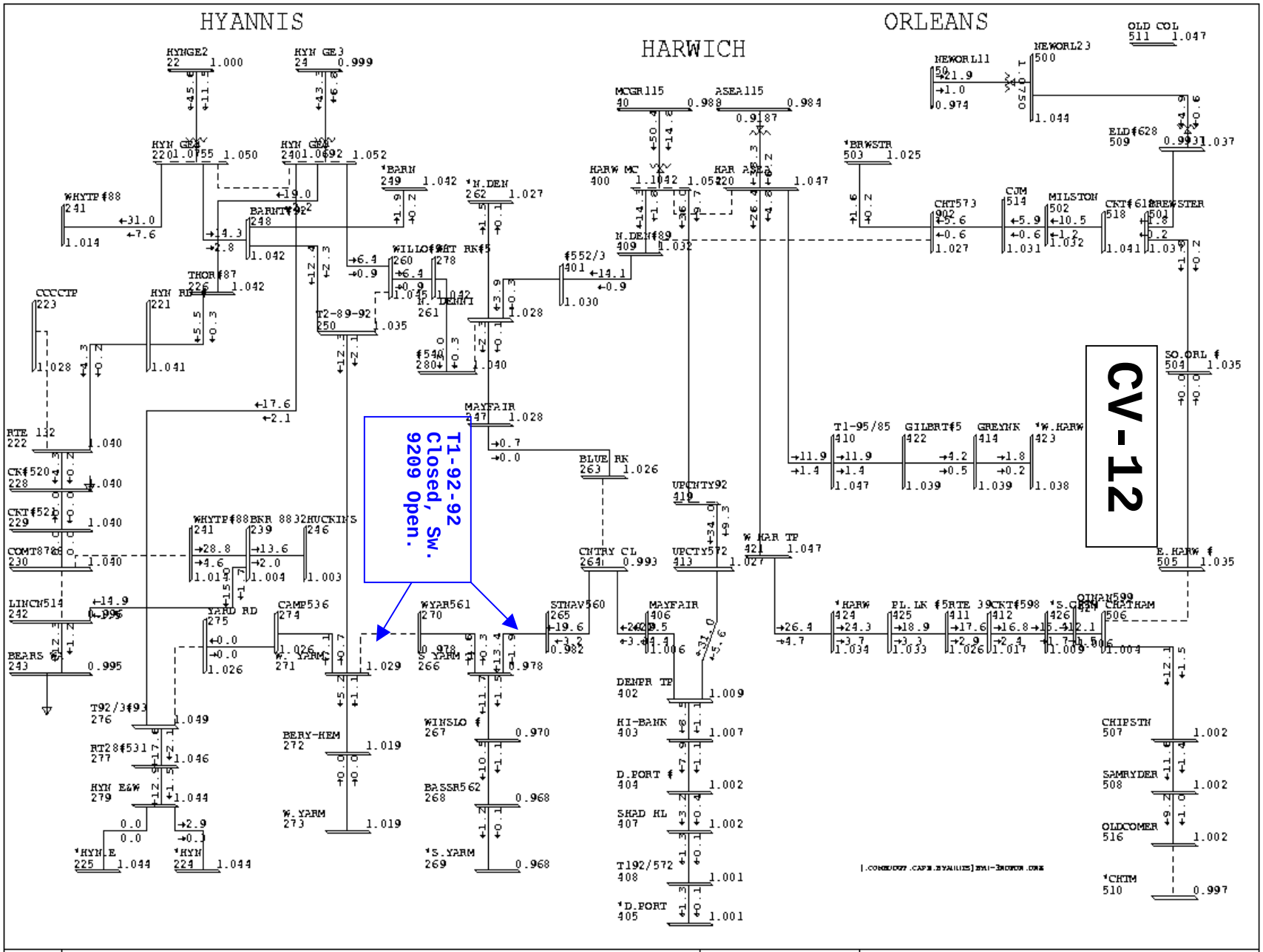
HYANNIS
HARWICH
ORLEANS
CV-12
T1-92-92
Closed, Sw.
9209 Open.
2002 SUMMER PEAK FORECAST CAPE CASE
CV PEAK 427 MW EXTREME WEATHER
MON, APR 08 2002 12:56
100 % RATEB
0.950 UV 1.050 OV
KV: ≤23 , ≤345
BUS - VOLTAGE(PU)
BRANCH - MW/MVAR
EQUIPMENT - MW/MVAR

BULK SUBSTATION DSS LINE SINGLE-CONTINGENCY ANALYSIS

* Coincident Feeder peaks at Forecasted Summer 2002 District Peaks
* Switching Sequences and Effects of Load Transfer Under Coincident Peak Conditions

CIRCUIT NUMBER	COINCIDENT PEAK LOAD (MW)	(MVA)	NUMBER CUSTOMERS	BACKUP CIRCUIT	BACKUP STATION	SWITCHING ACTIONS	BACKUP CKT. LOAD (BEFORE) (MW)	(MVA)	(AFTER) (MW)	(MVA)	SCADA ALARM (MVA)	PROBLEM AREAS
Mashpee Substation												
77	7.7	7.8	3056	77	Hatchville	CLOSE T1-77-77	10.1	10.2	18.1	18.4	28	
						OPEN 7762						
88	28.2	28.6	13625	88	Hyannis GE2	CLOSE T1-88-88	17.7	18.0	31.1	32.0	34	Note: The entire 88 line cannot be backed up from Hyannis. Split the circuit by opening switch #8896 W. of Osterville Tap. Feed the remainder from the Mashpee 77 line.
						OPEN 8862						
						OPEN 8896						
				77	Mashpee	CLOSE T1-77-88	7.7	7.8	22.9	23.1	34	

2003 T&D OPERATING STUDY
CAPE & VINEYARD DISTRICT

ORLEANS WAUKESHA (#118) TRANSFORMER OUTAGE CONTINGENCY

WAUKESHA 30/40/50 [56] MVA Transformer Bank

Overload Ratings:

Summer Normal	59 MVA
Summer Emergency	65 MVA
Winter Normal	70 MVA
Winter Emergency	75 MVA

Switching Actions:

Open: Circuit Switcher 11843
Main circuit breaker 11842

Close: Orleans 23kV bus tie breaker #T1-254
* Tap changers must be in same position, and off.

Capacitor Bank breakers 1184c and 1194c, as needed.

Results:

Reference Diagram **CV-13**.

Loading	No heavy loading conditions were identified.
Voltage	No low voltage conditions were identified.

Additional Actions Required:

None

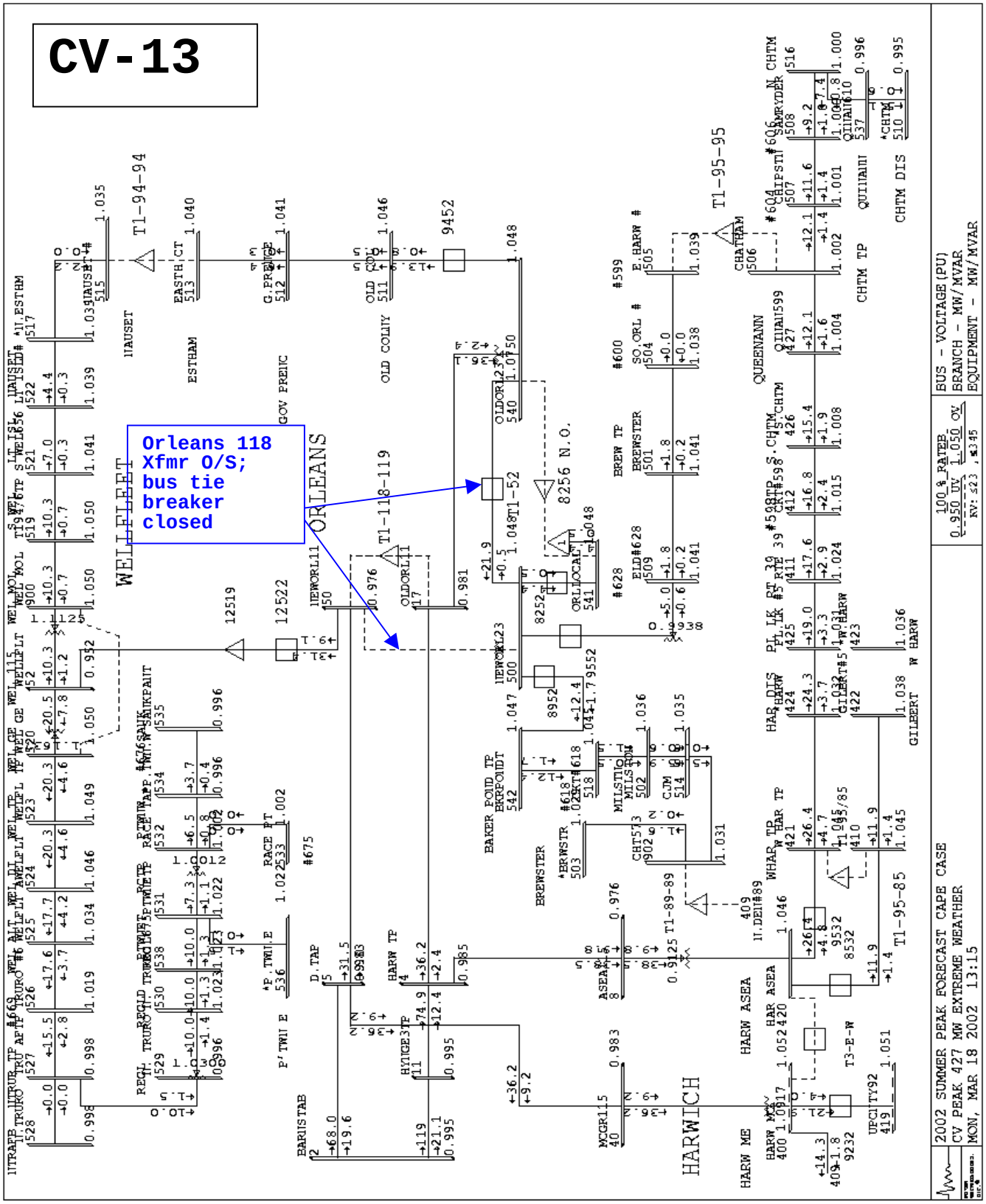
CV-13
Orleans 118
Xfmr O/S;
bus tie
breaker
closed
WELLFLEET
ORLEANS
HARWICH
T1-94-94
T1-95-95
T1-118-119
T1-52
T1-89-89
T1-95-85
2002 SUMMER PEAK FORECAST CAPE CASE
CV PEAK 427 MW EXTREME WEATHER
MON, MAR 18 2002 13:15
BUS - VOLTAGE(PU)
BRANCH - MW/MVAR
EQUIPMENT - MW/MVAR

2003 T&D OPERATING STUDY
CAPE & VINEYARD DISTRICT

ORLEANS A-C (#119) TRANSFORMER OUTAGE CONTINGENCY

Alllis Chalmers 20/26/33 MVA Transformer Bank

Overload Ratings:

Summer Normal	43 MVA
Summer Emergency	47 MVA
Winter Normal	49 MVA
Winter Emergency	53 MVA

Switching Actions:

Open: Circuit Switcher 11943
Main circuit breaker 11942

Close: Orleans 23kV bus tie breaker #T1-254
* Tap changers must be in same position, and off.

Capacitor Bank breakers 1184c and 1194c, as needed.

Results:

Reference Diagram **CV-14**.

Loading	No heavy loading conditions were identified.
Voltage	No low voltage conditions were identified.

Additional Actions Required:

None.

CV-14

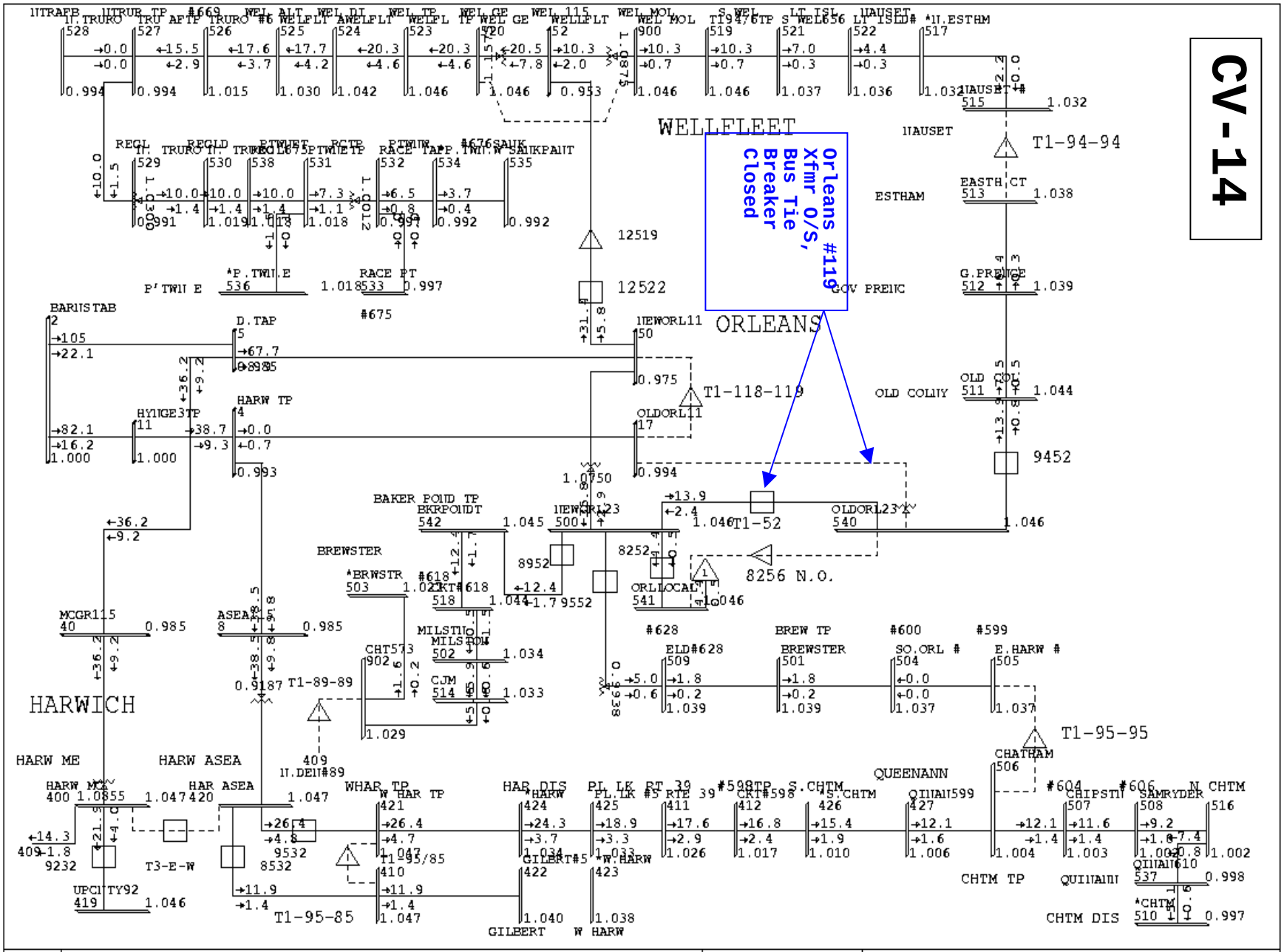

2002 SUMMER PEAK FORECAST CAPE CASE CV PEAK 427 MW EXTREME WEATHER MON, MAR 18 2002 13:13	100 % RATEB 0.950 UV 1.050 OV KV: ≤23 , ≤345	BUS - VOLTAGE(PU) BRANCH - MW/MVAR EQUIPMENT - MW/MVAR

BULK SUBSTATION DSS LINE SINGLE-CONTINGENCY ANALYSIS

* Coincident Feeder peaks at Forecasted Summer 2002 District Peaks
* Switching Sequences and Effects of Load Transfer Under Coincident Peak Conditions

CIRCUIT NUMBER	COINCIDENT PEAK LOAD (MW)	(MVA)	NUMBER CUSTOMERS	BACKUP CIRCUIT	BACKUP STATION	SWITCHING ACTIONS	BACKUP CKT. LOAD (BEFORE) (MW)	(MVA)	(AFTER) (MW)	(MVA)	SCADA ALARM (MVA)	PROBLEM AREAS
	Orleans Substation											
	#89 Circuit is New DSS line to be formed off of #95 line											
89	12.4	12.5	5000 (estimate)	89	Harwich	CLOSE T1-89-89 OPEN 8952	6.4	6.5	27.3	28.1	31	
	#95 Line, PRE-#89 Line Addition											
95	17.5	17.7	10871	95	Harwich	CLOSE T1-95-95 OPEN 9552	26.4	26.8	46.7	51.3	34	Harwich #95 flow 51% > 34 MVA Alarm, 28% > 40 MVA trip, 5% > 49 MVA LTE rating of 795 ACSR conductor, Harwich ASEA Xfmr flow 66.3 MVA, 10% over 60 MVA Alarm
	#95 Line, POST-#89 Line Addition											
95	17.4	17.7	5871 (estimate)	95	Harwich	CLOSE T1-95-95* OPEN 9552	13.8	13.9	31.7	32.5	34	
								*Tie switch relocated post reconfig.				
	#82 Circuit feeds Orleans Local Sub (#950, #951, #952 4kV Circuits)											
82	4.4	4.4	1986	82	Orleans	CLOSE T1-77-77 OPEN 8252	0.0	0.0	4.4	4.4	?	
	#94 Line, Pre-Wellfleet Swap											
94	13.9	13.9	4475	94	Wellfleet	CLOSE T1-77-77 OPEN 9452	10.3	10.3	24.9	24.9	30	
	#94 Line, POST-Wellfleet Swap											
94	13.9	13.9	4475	94	Wellfleet	CLOSE T1-77-77 OPEN 9452	10.3	10.3	24.9	24.9	30	Post DSS Line Swap at Wellfleet, GE XFMR load will be 25.9 MVA, 4% over 25 MVA LTE rating.

2003 T&D OPERATING STUDY
CAPE & VINEYARD DISTRICT

OTIS TRANSFORMER OUTAGE CONTINGENCY

Alllis Chalmers 20/26/33 MVA Transformer Bank

Overload Ratings:

Summer Normal	43 MVA
Summer Emergency	47 MVA
Winter Normal	49 MVA
Winter Emergency	53 MVA

Switching Actions:

Open: Circuit Switcher 10753
Main circuit breaker 10752
Feeder Breaker #8152
Feeder Breaker #7952
Feeder Breaker #8652

Close: Tie Switch #T1-81-81 (to Sandwich)
Tie Switch #T2-406-409 (ties #86 line to Hatchville #78 line)
Switch 7872 * at Otis Air Base Sub (to Hatchville #78 line)

Capacitor bank breakers 1153c and 1221c, as required.

* This is an automatic transfer switch. DO NOT use this to pick up Otis #86 line by backfeeding through the Otis bus, you will overload 6.8 miles of 1/0 copperweld conductor on #79 line).

Results:

Reference Diagram **CV-15**.

Loading	No heavy loading conditions were identified.
Voltage	No low voltage conditions were identified.

Additional Actions Required:

Construction of Oak Street Substation by Summer 2003 will alleviate the heavy loading conditions on both Sandwich and Mashpee.

CV-15

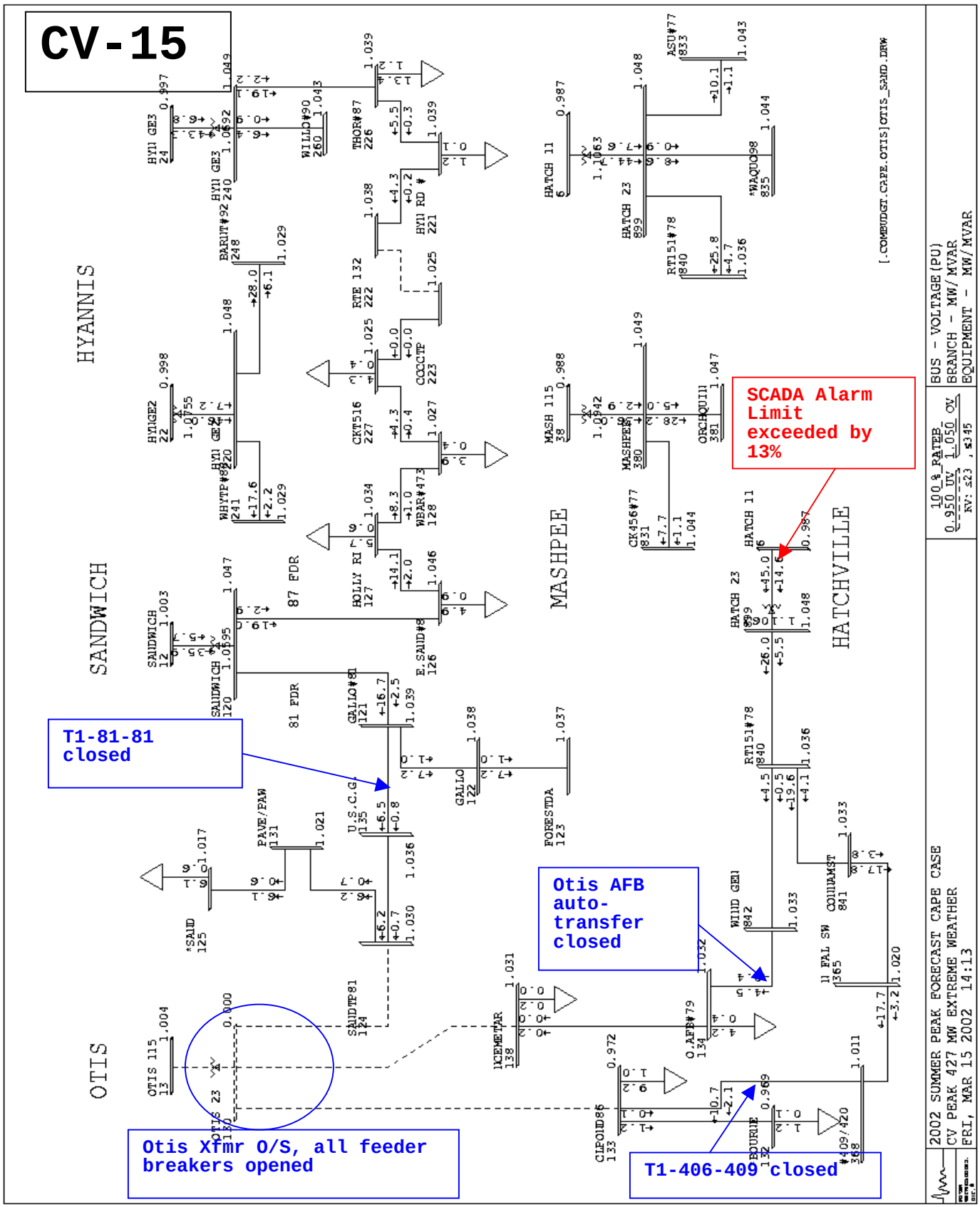
HYANNIS
SANDWICH
MASHPEE
HATCHVILLE
OTIS
SCADA Alarm Limit exceeded by 13%
T1-81-81 closed
Otis AFB auto-transfer closed
Otis Xfmr O/S, all feeder breakers opened
T1-406-409 closed
87 FDR
81 FDR
BUS - VOLTAGE(PU)
BRANCH - MW/MVAR
EQUIPMENT - MW/MVAR
2002 SUMMER PEAK FORECAST CAPE CASE
CV PEAK 427 MW EXTREME WEATHER
ERI, MAR 15 2002 14:13

BULK SUBSTATION DSS LINE SINGLE-CONTINGENCY ANALYSIS

* Coincident Feeder peaks at Forecasted Summer 2002 District Peaks
* Switching Sequences and Effects of Load Transfer Under Coincident Peak Conditions

CIRCUIT NUMBER	COINCIDENT PEAK LOAD (MW)	(MVA)	NUMBER CUSTOMERS	BACKUP CIRCUIT	BACKUP STATION		SWITCHING ACTIONS	BACKUP CKT. LOAD (BEFORE) (MW)	(MVA)	(AFTER) (MW)	(MVA)	SCADA ALARM (MVA)	PROBLEM AREAS
Otis Substation													
79	4.6	4.6	3	78	Hatchville		CLOSE 7872 **	10.4	10.5	15.0	15.1	28	
							OPEN 7952						
		** This is an automatic throw-over at Otis AFB 23kV Substation; Need to verify backfeed to serve National Cemetery											
81	6.5	6.6	2006	81	Sandwich		CLOSE T1-81-81	10.1	10.2	16.7	16.9	25	
							OPEN 8152						
86	10.4	10.5	4425	78	Hatchville	*	CLOSE T2-406-409	10.4	10.5	21.4	21.9	28	
							OPEN 8652						
		*Recloser on #406 Circuit will see reverse flow.											

2003 T&D OPERATING STUDY
CAPE & VINEYARD DISTRICT

SANDWICH TRANSFORMER OUTAGE CONTINGENCY

MAGNETEK 30/40/50 [56] MVA Transformer Bank

Overload Ratings:

Summer Normal	59 MVA
Summer Emergency	64 MVA
Winter Normal	68 MVA
Winter Emergency	72 MVA

Switching Actions:

Open: Circuit Switcher 12213
Main circuit breaker 12232
Feeder Breaker #8162 (at Sandwich)
Feeder Breaker #8762 (at Sandwich)

Close: Tie Switch #T1-81-81 (to Otis)
Tie Switch #T1-87-87 (to Hyannis GE #1)
Auto-transfer Switch #7872 at Otis A.F.B. *

Capacitor Bank breakers 1234c, 1075c as required.

* Roughly 0.2 MW of load at the National Cemetery will still be on the Otis #79 feeder after load transfer of AFB to #78 line.

Results:

Reference Diagram **CV-16**.

Loading	No heavy loading conditions were identified.
Voltage	No low voltage conditions were identified.

Additional Actions Required:

Construction of new Oak Street substation will alleviate the heavy loading concern on #87 DSS line.

CV-16

17% over SCADA Alarm

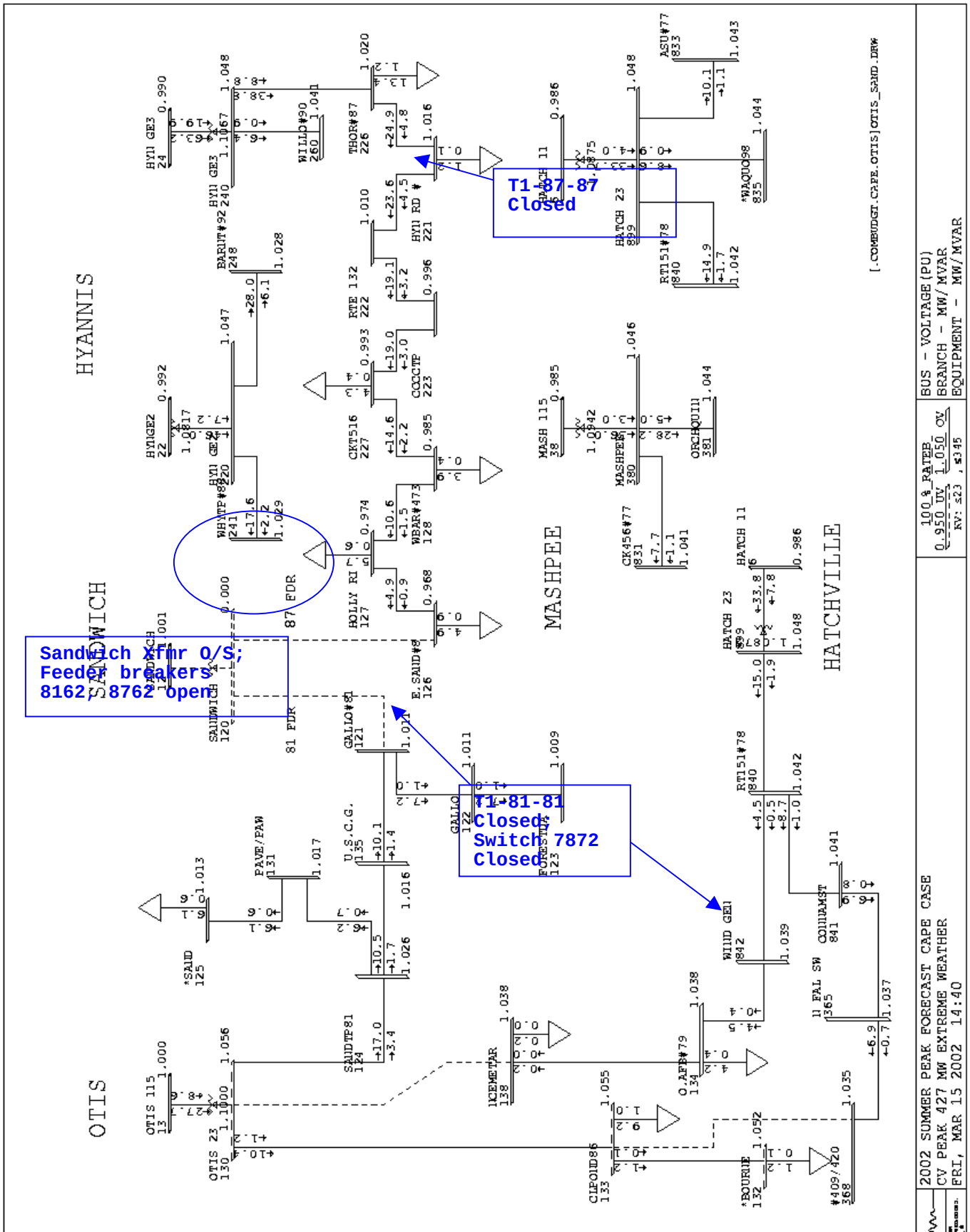

BULK SUBSTATION DSS LINE SINGLE-CONTINGENCY ANALYSIS

* Coincident Feeder peaks at Forecasted Summer 2002 District Peaks
* Switching Sequences and Effects of Load Transfer Under Coincident Peak Conditions

CIRCUIT NUMBER	COINCIDENT PEAK LOAD (MW)	(MVA)	NUMBER CUSTOMERS	BACKUP CIRCUIT	BACKUP STATION	SWITCHING ACTIONS	BACKUP CKT. LOAD (BEFORE) (MW)	(MVA)	(AFTER) (MW)	(MVA)	SCADA ALARM (MVA)	PROBLEM AREAS
Sandwich Substation												
81	10.1	10.2	3881	81	Otis	CLOSE T1-81-81	6.5	6.6	17.0	17.3	22	
						OPEN 8162						
		Swap 79 to Hatchville 78		78	Hatchville	OPEN 7952	10.4	10.5	15.0	15.1	28	
						CLOSE 7872 **						
		** This is an automatic throw-over at Otis AFB 23kV Substation; Need to verify backfeed to serve National Cemetery										
87	19.0	19.2	8611	87	Hyannis GE	CLOSE T1-81-81	19.0	19.1	38.8	39.8	34	#87 Ckt Flow 17% > 34 MVA SCADA Alarm
						OPEN 8762						Trip setting is 40 MVA

2003 T&D OPERATING STUDY
CAPE & VINEYARD DISTRICT

WELLFLEET GE (#1) TRANSFORMER OUTAGE CONTINGENCY

General Electric 12/16/20 MVA Transformer Bank

Overload Ratings:

Summer Normal	22 MVA
Summer Emergency	25 MVA
Winter Normal	25 MVA
Winter Emergency	27 MVA

The Wellfleet Moloney bank now feeds the #96 line and the GE bank feeds the #94 line. The contingency is again taken on the GE bank:

Switching Actions:

Open: Circuit Switcher 12553
Main circuit breaker 12552
Feeder Breaker #9462

Close: Wellfleet 23kV bus tie breaker #T1-N-S
* Tap changers must be in same position, and off.

Tie Switch #T1-94-94 (to Orleans)

Capacitor Bank breakers 1255C and 1256c, as needed.

Results:

Reference Diagram **CV-18**.

Loading	No heavy loading conditions were identified.
Voltage	No low voltage conditions were identified.

Additional Actions Required:

None.

CV-17

Open #9462 Breaker at Wellfleet, Close T1-94-94

Wellfleet GE Xfmr O/S, Bus Tie Closed

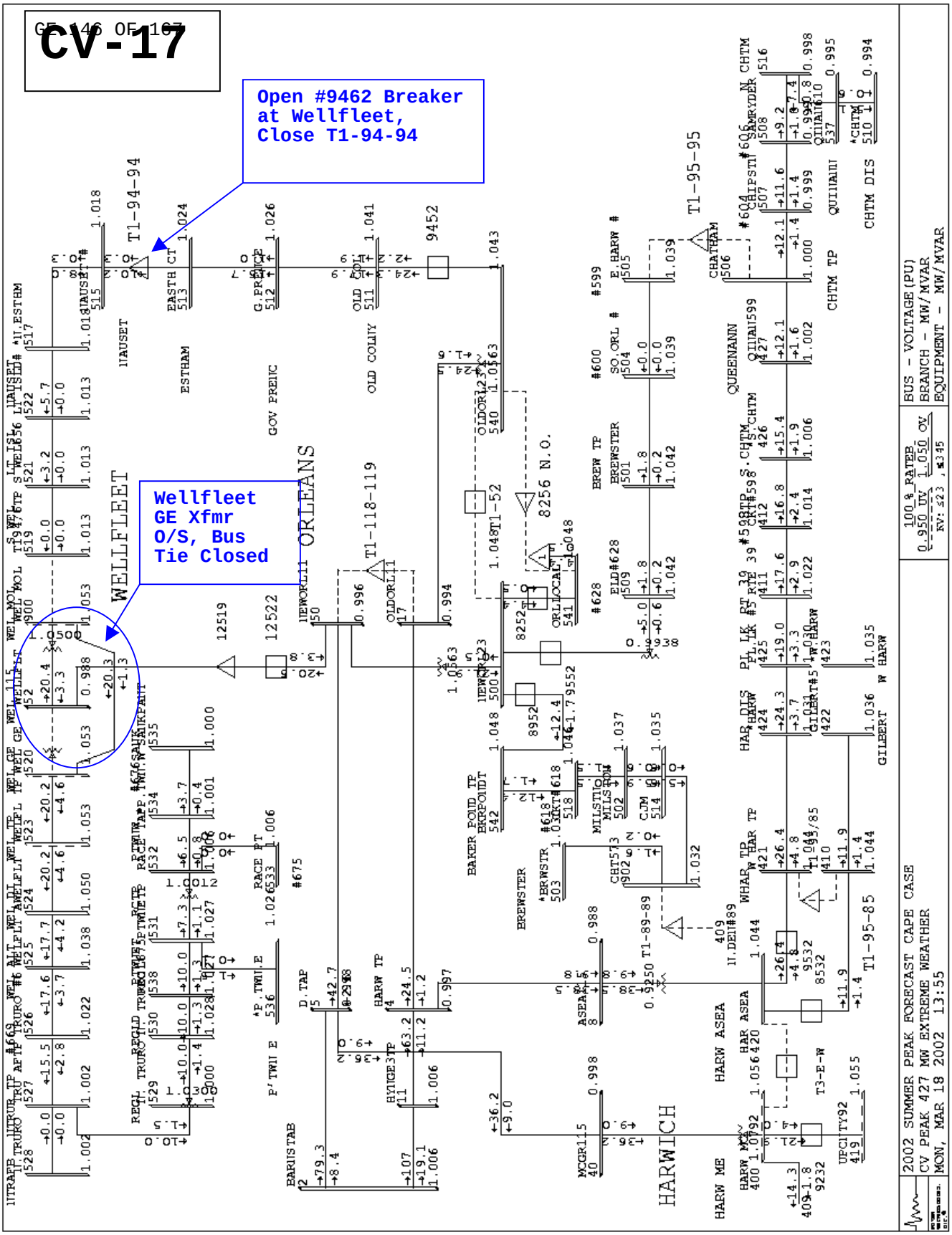

CV-18

NEW DSS LINE CONFIGURATION

Open #9462 Breaker at Wellfleet, Close T1-94-94

Wellfleet GE Xfmr O/S; Bus Tie Breaker Closed

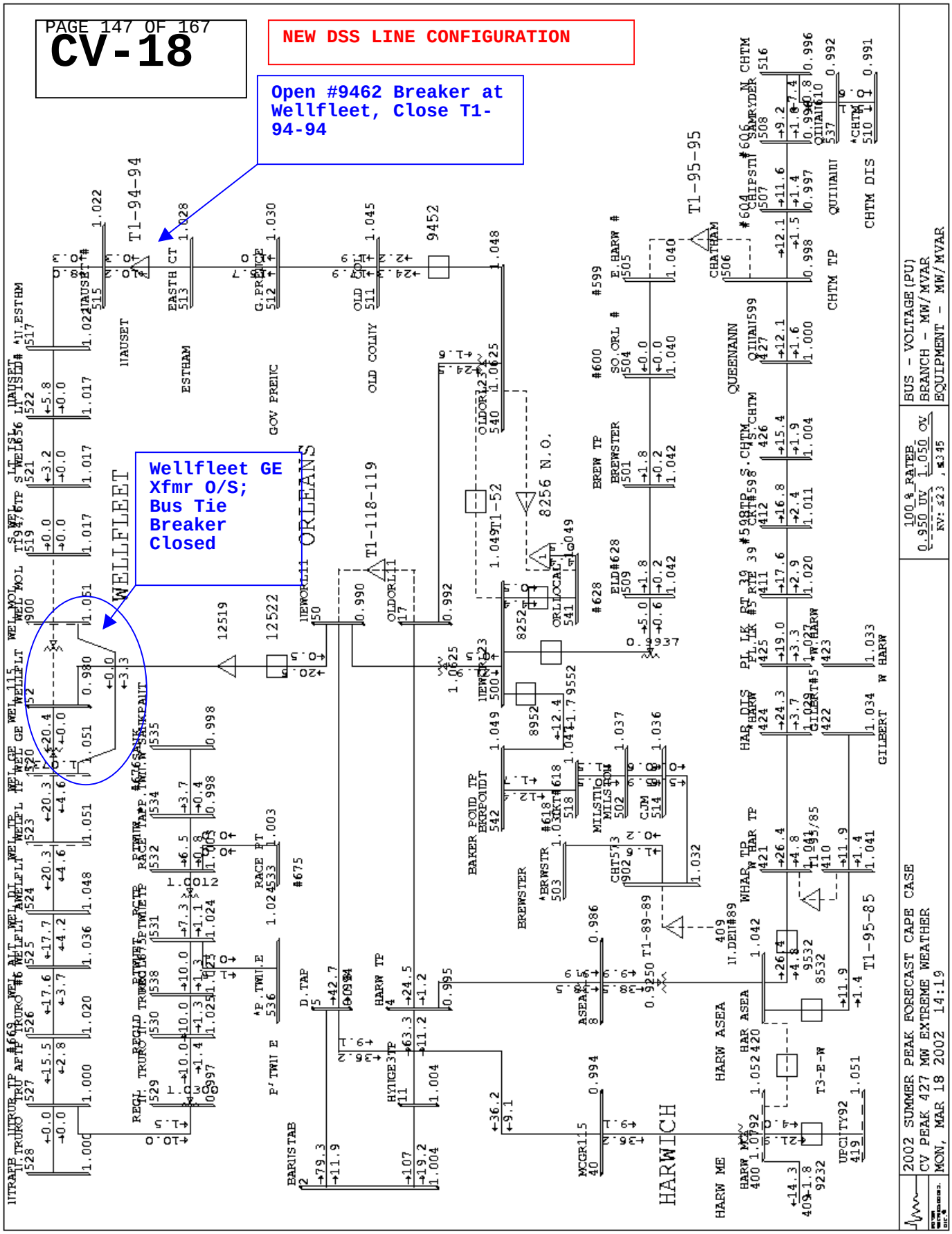

2003 T&D OPERATING STUDY
CAPE & VINEYARD DISTRICT

WELLFLEET MOLONEY (#2) TRANSFORMER OUTAGE CONTINGENCY

Moloney 16/21/26 MVA Transformer Bank

Overload Ratings:

Summer Normal	28 MVA
Summer Emergency	31 MVA
Winter Normal	33 MVA
Winter Emergency	35 MVA

The Wellfleet Moloney bank now feeds the #96 line and the GE bank feeds the #94 line. The contingency is again taken on the Moloney bank:

Switching Actions:

Open: Circuit Switcher 12563
Main circuit breaker 12562
Feeder Breaker #9462

Close: Wellfleet 23kV bus tie breaker #T1-N-S
* Tap changers must be in same position, and off.

Tie Switch #T1-94-94 (to Orleans)

Capacitor Bank breakers 1255C and 1256c, as needed.

Results:

Reference Diagram **CV-20**.

Loading	No heavy loading conditions were identified.
Voltage	No low voltage conditions were identified.

Additional Actions Required:

None.

CV-19

#9462 Breaker Open, Tie Switch T1-94-94 Closed

Wellfleet Moloney O/S; Tie Breaker Closed

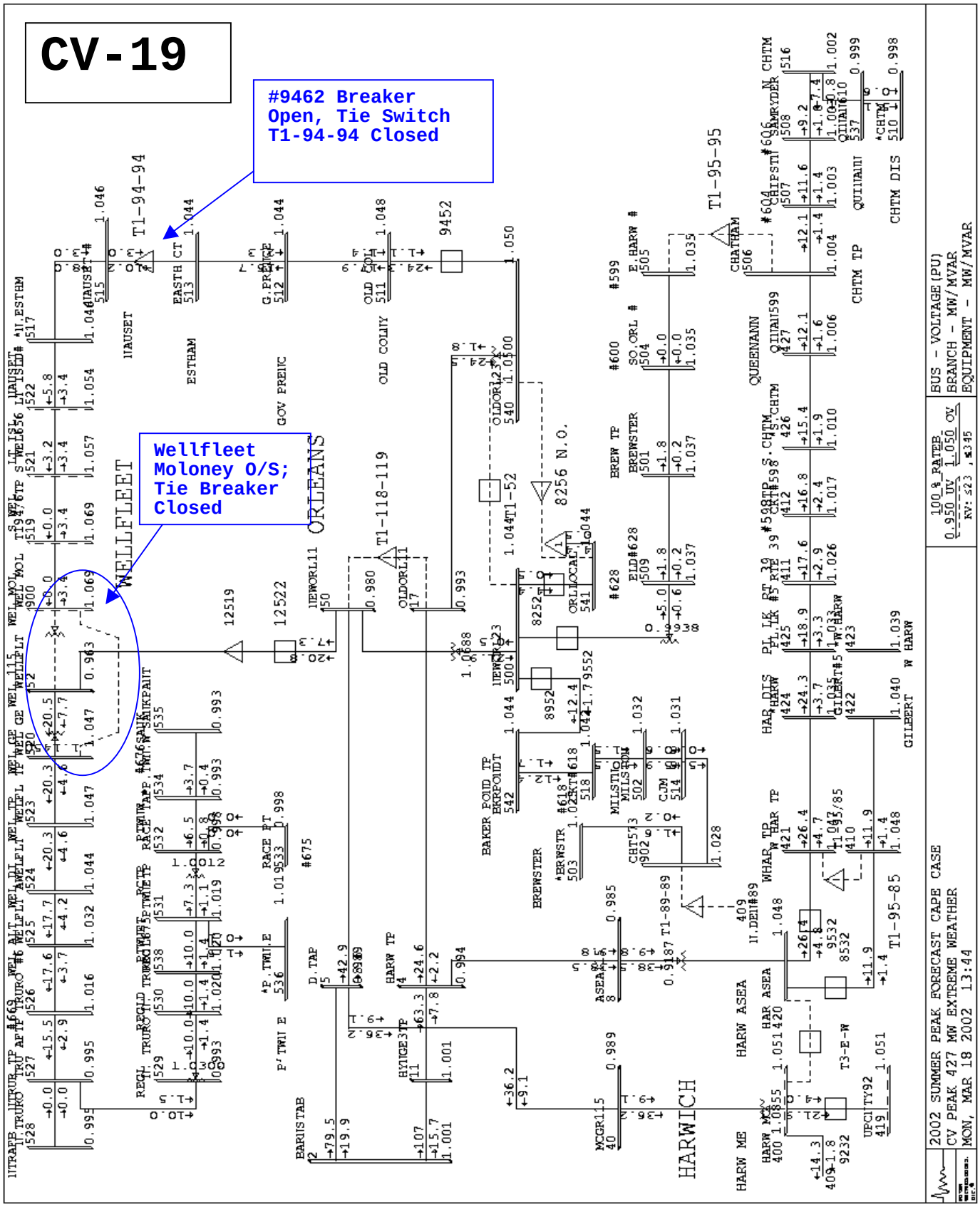

CV-20

NEW DSS LINE CONFIGURATION

#9462 Breaker Open, Tie Switch #T1-94-94 Closed

Wellfleet Moloney Xfmr O/S; Tie Breaker Closed

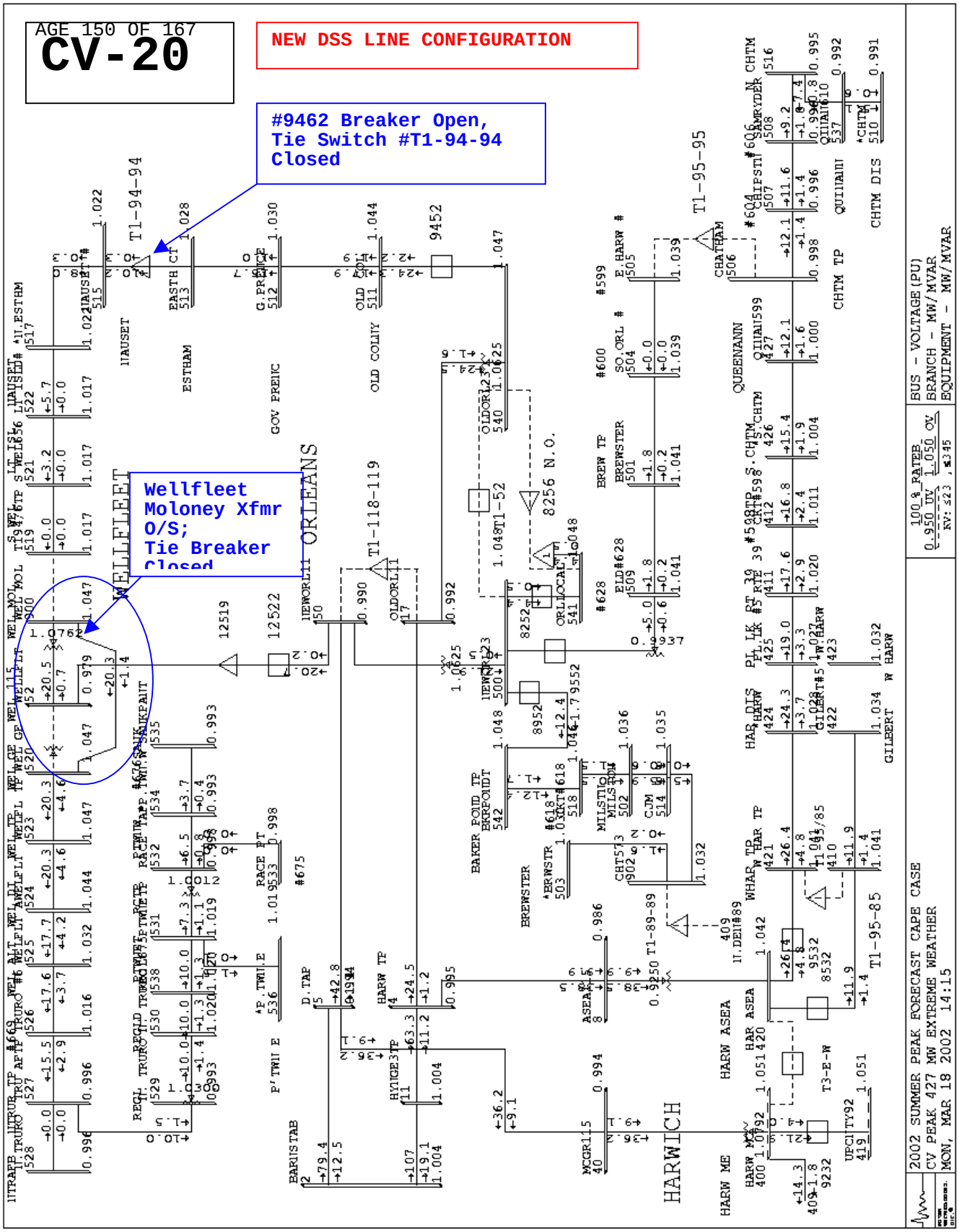

WO #01201901 & 01201905
ONE LINE DIAGRAM –
EXISTING CONDITIONS
LINES 94 & 96 – WELLFLEET BULK SUB

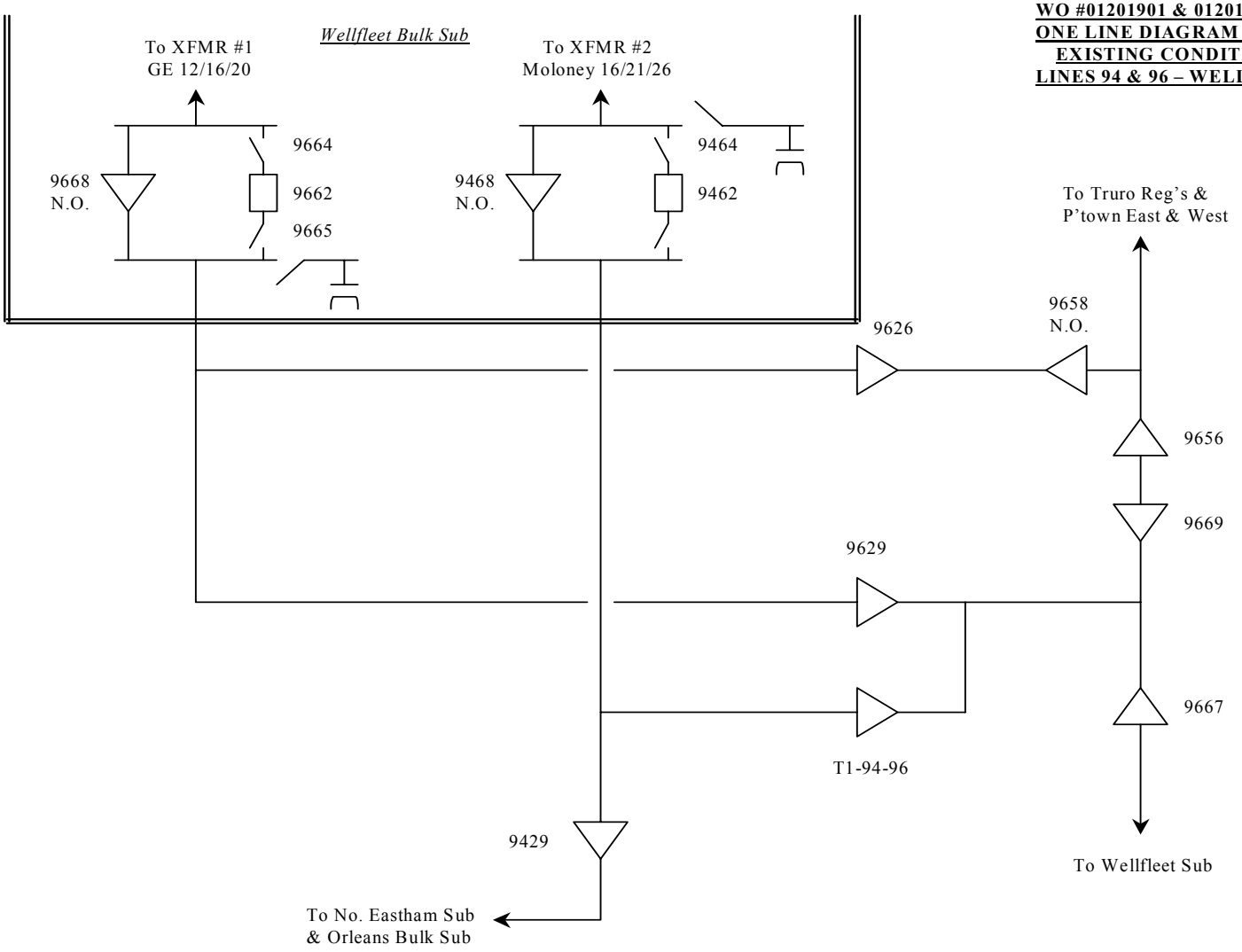

C. J. Colantuone
Distribution Engineer
03/15/02

WO #01201901 & 01201905
ONE LINE DIAGRAM –
CONDITIONS UPON WORK ORDERS' COMPLETION
LINES 94 & 96 – WELLFLEET BULK SUB

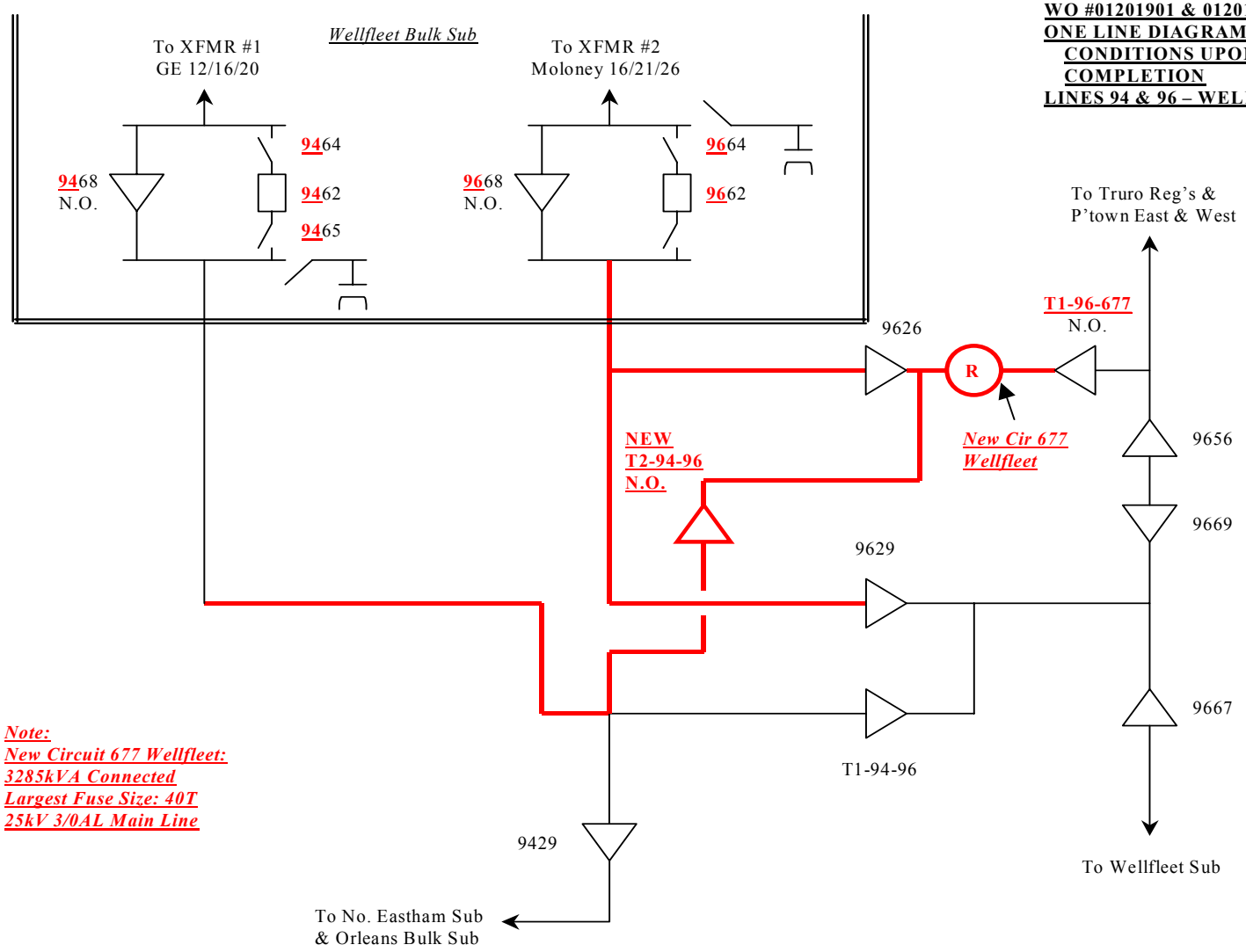

Note:
New Circuit 677 Wellfleet:
3285kVA Connected
Largest Fuse Size: 40T
25kV 3/0AL Main Line

C. J. Colantuone
Distribution Engineer
03/15/02

BULK SUBSTATION DSS LINE SINGLE-CONTINGENCY ANALYSIS

* Coincident Feeder peaks at Forecasted Summer 2002 District Peaks
* Switching Sequences and Effects of Load Transfer Under Coincident Peak Conditions

CIRCUIT NUMBER	COINCIDENT PEAK LOAD (MW)	(MVA)	NUMBER CUSTOMERS	BACKUP CIRCUIT	BACKUP STATION	SWITCHING ACTIONS	BACKUP CKT. LOAD (BEFORE) (MW)	(MVA)	(AFTER) (MW)	(MVA)	SCADA ALARM (MVA)	PROBLEM AREAS
Wellfleet Substation												
	Pre-Swap of #94 and #96 DSS Lines											
96	20.3	20.8	9861	94	Wellfleet	CLOSE T1-84-96	10.3	10.3	30.8	30.8	30	#94 Circuit Flow 1% > 30 MVA SCADA Alarm
						OPEN 9662						Wellfleet GE Transformrer 99% of 31 MVA LTE
												Both Wellfleet 3 MVAR caps in service
94	10.3	10.3	4936	94	Orleans	CLOSE T1-94-94	13.9	13.9	24.3	24.4	28	Orleans AC 3 MVAR cap in service
						OPEN 9462						
	POST-Swap of #94 and #96 DSS Lines											
96	20.3	20.8	9861	94	Wellfleet	CLOSE T1-84-96	10.3	10.3	20.4	20.4	30	One Wellfleet 3 MVAR cap in service
						OPEN 9662						
				94	Orleans	CLOSE T1-94-94	13.9	13.9	24.3	24.4	28	Orleans AC 3 MVAR cap in service
						OPEN 9462						
94	10.3	10.3	4936	94	Orleans	CLOSE T1-94-94	13.9	13.9	24.2	24.2	28	Orleans AC 3 MVAR cap in service
						OPEN 9462						

2003 T&D OPERATING STUDY
CAPE & VINEYARD DISTRICT

MARTHA'S VINEYARD 23kV SUBMARINE CABLE OUTAGE CONTINGENCIES

Overload Ratings:

#91 Cable, Elm Road x West Chop *

250 kcmil Submarine Type Cable

Summer Normal	17 MVA
Summer Emergency	18.4 MVA
Winter Normal	17 MVA
Winter Emergency	19.7 MVA

#97 Cable, Elm Road x West Chop *

350 kcmil Submarine Type Cable

Summer Normal	17 MVA
Summer Emergency	18.4 MVA
Winter Normal	17 MVA
Winter Emergency	19.7 MVA

**** A single-contingency outage of the Falmouth-Elm Rd. #97 line takes both cables O/S.***

#99 Cable, Falmouth x Oak Bluffs

350 kcmil Land (Falmouth Sub. to Shore St.) and Submarine (Shore St. to Oak Bluffs) Type Cable
*Winter ratings not listed in SCADA Alarm book, same as Summer assumed.

Summer Normal	17 MVA
Summer Emergency	19.7 MVA
Winter Normal	17 MVA*
Winter Emergency	19.7 MVA*

#75 Cable, Falmouth x Oak Bluffs

350 kcmil Submarine Type Cable, normally energized from Oak Bluffs to an open elbow at Shore St. / Clinton Street manhole, Falmouth, but carrying no load. Derated to 8 MVA due to cable defects.

Summer Normal	8 MVA

Summer Emergency	8 MVA
Winter Normal	8 MVA
Winter Emergency	8 MVA

NORMAL OPERATION WITH ALL THREE CABLES IN SERVICE

Diagram #CV-21 shows normal power flows for Martha's Vineyard with existing 3- cables (91, 97 and 99 cables) on the Island with existing switching configuration. This diagram reflects Summer 2003 forecasted loading conditions of 35 MW.

Diagram #CV-22 shows normal power flows for Martha's Vineyard, with the existing switching configuration, but reflecting Summer 2001 actual loading conditions of approximately 42 MW.

In either case, the existing switching configuration has the three 23kV submarine cables feeding the following Island load areas:

Preferred Configuration:

99 CABLE: (feeds)

Oak Bluffs Dist Sub (#124 Ckt)
Martha's Vineyard Hospital (Ckt #221)
Katama (Ckt #123)
97B (Edgar Town-V.Haven Rd)
97E Line and Ckt #224
Circuit #223.

97 CABLE: (feeds)

Vineyard Haven Distribution Sub. (#121 & #122 Ckts)
Doger's Hole and State Forest Rd load)
Circuit #225
Edgartown Distribution Sub and Circuit #123
Mirant's Oak Bluffs Generation (8.1 MW) *

91 CABLE: (feeds)

#222 Ckt (Cove Road)
91 Distribution load on County Road
226 and 220 Circuits on South Road
Chilmark (Bettlebung) Distribution Sub (#126 Ckt)
Load on Edgartown-W.Tisbury Road
5Mirant's West Tisbury Generation (5.4 MW) *

*Note: Total Vineyard Generation = 13.5 MW, of which 10 MW is FIRM per contract with Mirant. Contract expires 2008.

CV-21

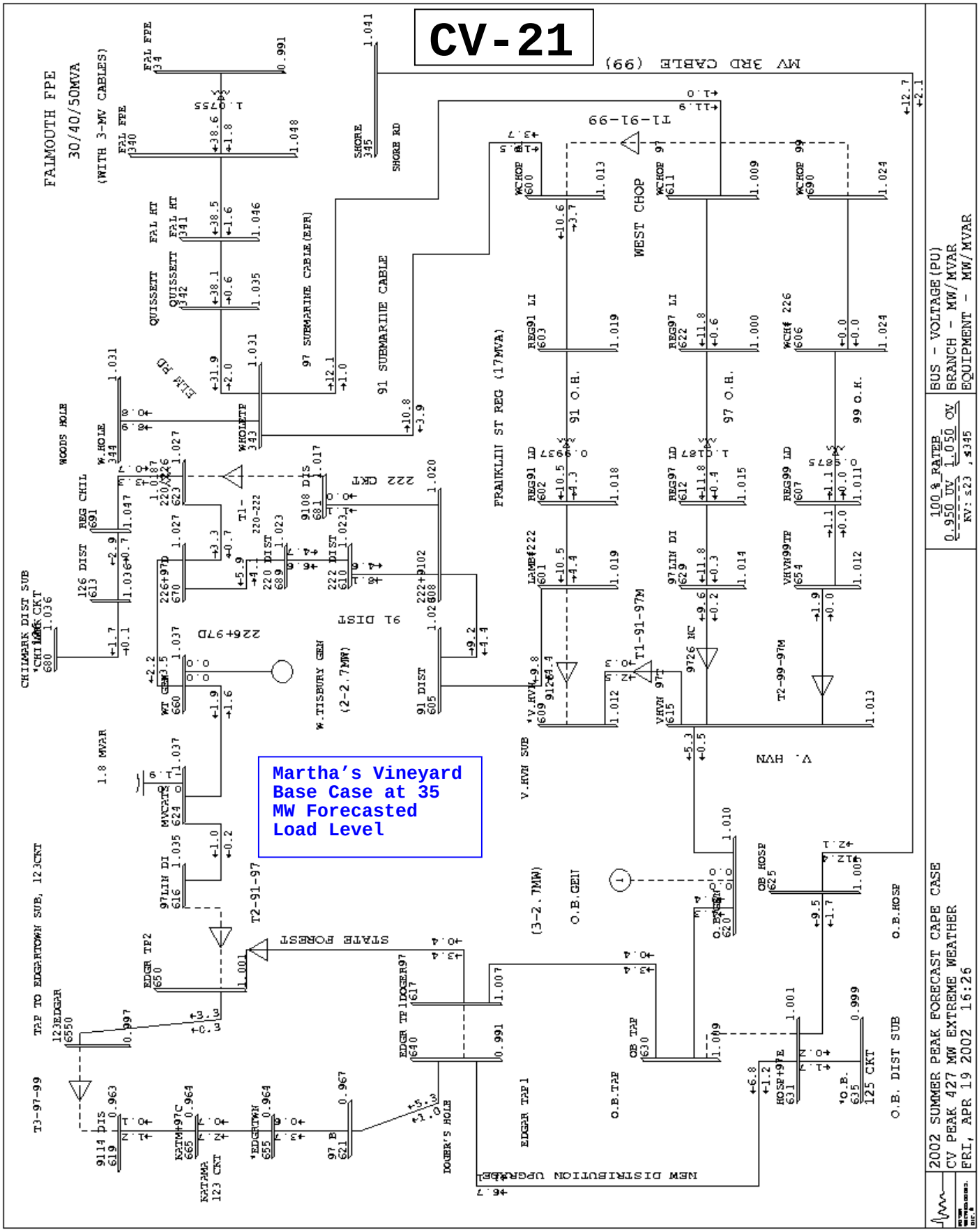

Martha's Vineyard Base Case at 35 MW Forecasted Load Level

CV-22

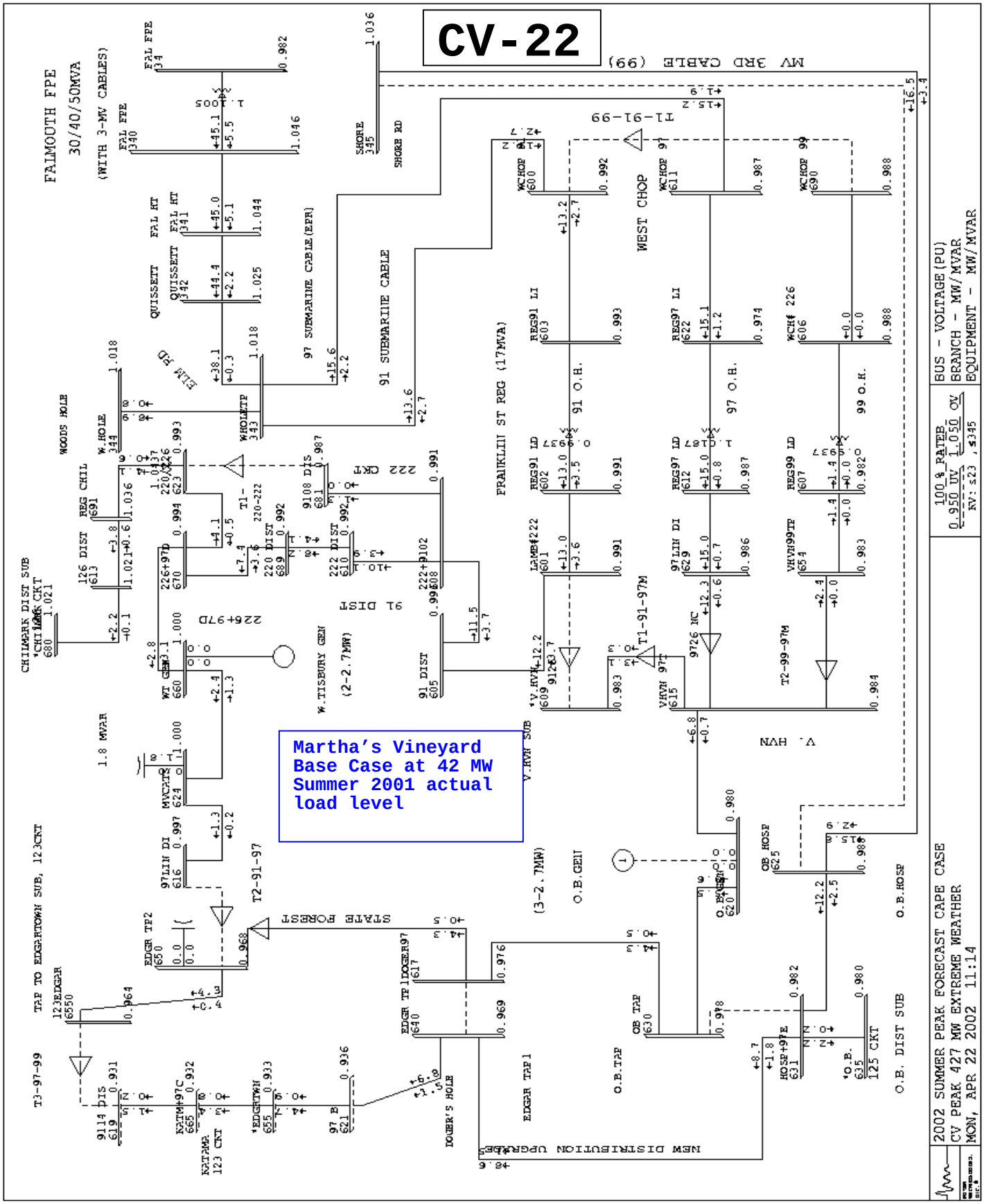

Martha's Vineyard
Base Case at 42 MW
Summer 2001 actual
load level

Results: Including SWITCHING SEQUENCE AND LOAD FLOW FOR EACH CABLE OUTAGE

Single-Contingency 23kV Submarine Cable Outages:

At Forecasted 35 MW Load Level:

91 cable outage conditions:
(Load flow # CV-23)

Open Switch #9186 at Elm Rd
Open Switch #9157 at W. Chop
Open Breaker #9722 at Vineyard Haven
Close Switch #T1-91-97 at Vineyard Haven.
Close Switch #T1-97-99 at Doger's Hole
0.0 MW Generation at West Tisbury
2.4 MW Generation at Oak Bluffs

#97 Cable Flow: 17.7 MW / 17.8 MVA
#99 Cable Flow: 15.9 MW / 15.9 MVA

97 Cable outage condition:
(Load flow # CV-24)

Open Switch #9786 at Elm Rd
Open Switch #9757 at W. Chop
Open Breaker #9722 at Vineyard Haven.
Close Switch #T1-91-97 at Vineyard Hvn.
Close Switch #T1-97-99 at Doger's Hole
0.0 MW Generation at West Tisbury
2.4 MW Generation at Oak Bluffs

#91 Cable Flow: 17.8 MW / 18.1 MVA
#99 Cable Flow: 15.8 MW / 15.9 MVA

99 Cable outage condition:
(Load flow # CV-25)

Open #9932 Breaker at Falmouth
Open Switch #9945 at Oak Bluffs
Open Switch #9704 at Vineyard Haven
Close T1-91-97 Switch at Vineyard Haven
Close Switch #T1-97-99 at Doger's Hole
0.0 MW Generation at West Tisbury
5.7 MW Generation at Oak Bluffs

#91 Cable Flow: 13.5 MW / 13.9 MVA

#97 Cable Flow: 16.9 MW / 17.9 MVA

Single-Contingency 23kV Submarine Cable Outages:

At Actual 2001 42 MW Load Level:

91 cable outage conditions:
(Load flow # CV-26)

Open Switch #9186 at Elm Rd
Open Switch #9157 at W. Chop
Close Switch #T1-91-97 at Vineyard Haven.
2.5 MW Generation at West Tisbury
8.1 MW Generation at Oak Bluffs

#97 Cable Flow: 18.3 MW / 18.3 MVA
#99 Cable Flow: 16.4 MW / 16.7 MVA

There may be low voltage conditions within the Katama area.

97 Cable outage condition:
(Load flow # CV-27)

Open Switch #9786 at Elm Rd
Open Switch #9757 at W. Chop
Close Switch #T1-91-97 at Vineyard Hvn.
2.5 MW Generation at West Tisbury
8.1 MW Generation at Oak Bluffs

#91 Cable Flow: 18.3 MW / 18.5 MVA
#99 Cable Flow: 16.4 MW / 16.7 MVA

Low voltages ~0.94 per unit Katama area

99 Cable outage condition:
(Load flow # CV-28)

Open #9932 Breaker at Falmouth
Open #9945 Switch at Oak Bluffs
Close T1-97-99 at Doger's Hole
Open #9977 Switch State Forest 97 Line
Close T2-91-97 at State Forest Tap
Close T3-97-99 between #123 and #223 taps.
Open Switch #9951
2.5 MW Generation at West Tisbury
8.1 MW Generation at Oak Bluffs

#91 Cable Flow: 14.2 MW / 14.3 MVA
#97 Cable Flow: 17.7 MW / 18.1 MVA

There may be low voltage conditions within the Katama area.

CV-23

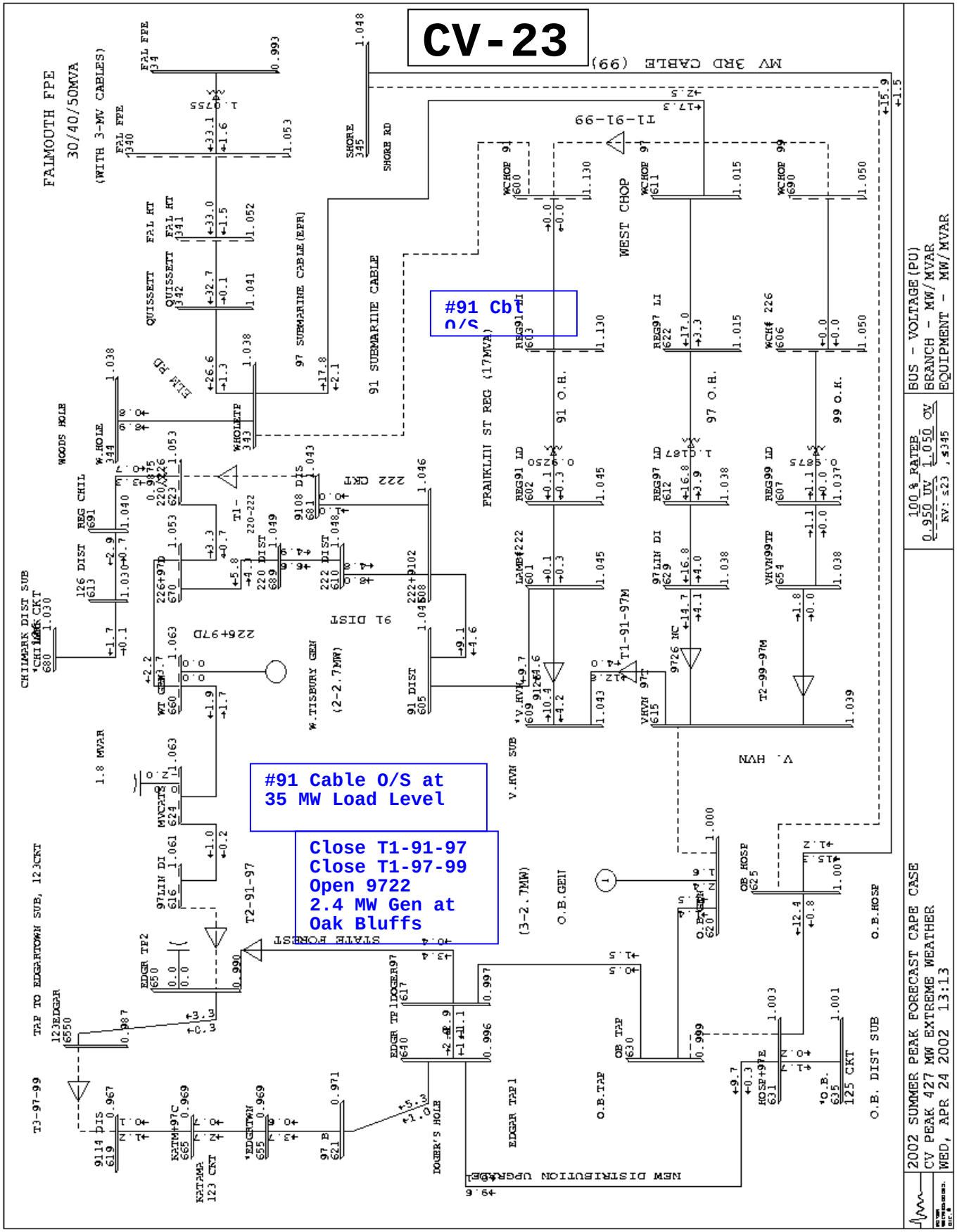

#91 Cbl O/S
#91 Cable O/S at 35 MW Load Level
Close T1-91-97
Close T1-97-99
Open 9722
2.4 MW Gen at Oak Bluffs
FALMOUTH FPE
30/40/50MVA
(WITH 3-MV CABLES)
MV 3RD CABLE (99)
91 SUBMARINE CABLE
97 SUBMARINE CABLE(EPR)
FRANKLIN ST REG (17MVA)
WEST CHOP
91 O.H.
97 O.H.
99 O.H.
222 CKT
91 DIST
W.TISBURY GEN
(2-2.7MW)
V.HVN SUB
V. HVN
STATE FOREST
(3-2.7MW)
O.B.GEN
O.B.HOSP
O.B.TAP
O.B. DIST SUB
NEW DISTRIBUTION UPGRADE
DOGER'S HOLE
EDGAR TAP1
TAP TO EDGARTOWN SUB, 123CKT
CHILMARK DIST SUB
WOODS HOLE
ELM RD
SHORE RD
T1-91-99
T1-91-97M
T2-99-97M
T2-91-97
T3-97-99
BUS - VOLTAGE(PU)
BRANCH - MW/MVAR
EQUIPMENT - MW/MVAR
100% RATEB
0.950 UV 1.050 OV
KV: ≤23 ,≤345
2002 SUMMER PEAK FORECAST CAPE CASE
CV PEAK 427 MW EXTREME WEATHER
WED, APR 24 2002 13:13

CV-24

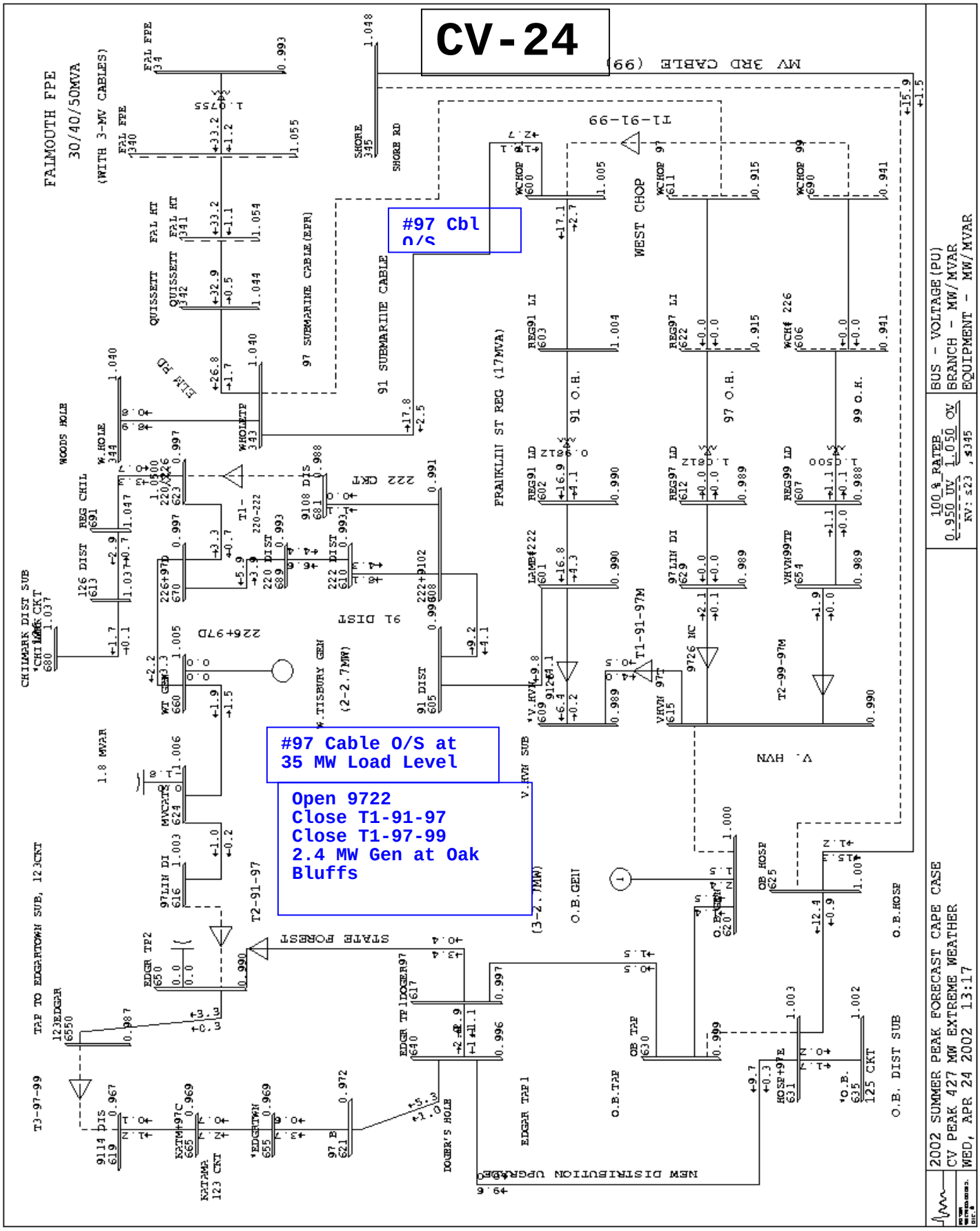

#97 Cbl O/S
#97 Cable O/S at 35 MW Load Level
Open 9722
Close T1-91-97
Close T1-97-99
2.4 MW Gen at Oak Bluffs
FALMOUTH FPE
30/40/50MVA
(WITH 3-MV CABLES)
MV 3RD CABLE (99)
T1-91-99
WEST CHOP
91 SUBMARINE CABLE
97 SUBMARINE CABLE(EPR)
FRANKLIN ST REG (17MVA)
91 O.H.
97 O.H.
99 O.H.
222 CKT
91 DIST
226+97D
STATE FOREST
NEW DISTRIBUTION UPGRADE
O.B. DIST SUB
V. HVN
T2-91-97
T2-99-97M
T1-91-97M
T3-97-99
BUS - VOLTAGE(PU)
BRANCH - MW/MVAR
EQUIPMENT - MW/MVAR
2002 SUMMER PEAK FORECAST CAPE CASE
CV PEAK 427 MW EXTREME WEATHER
WED, APR 24 2002 13:17

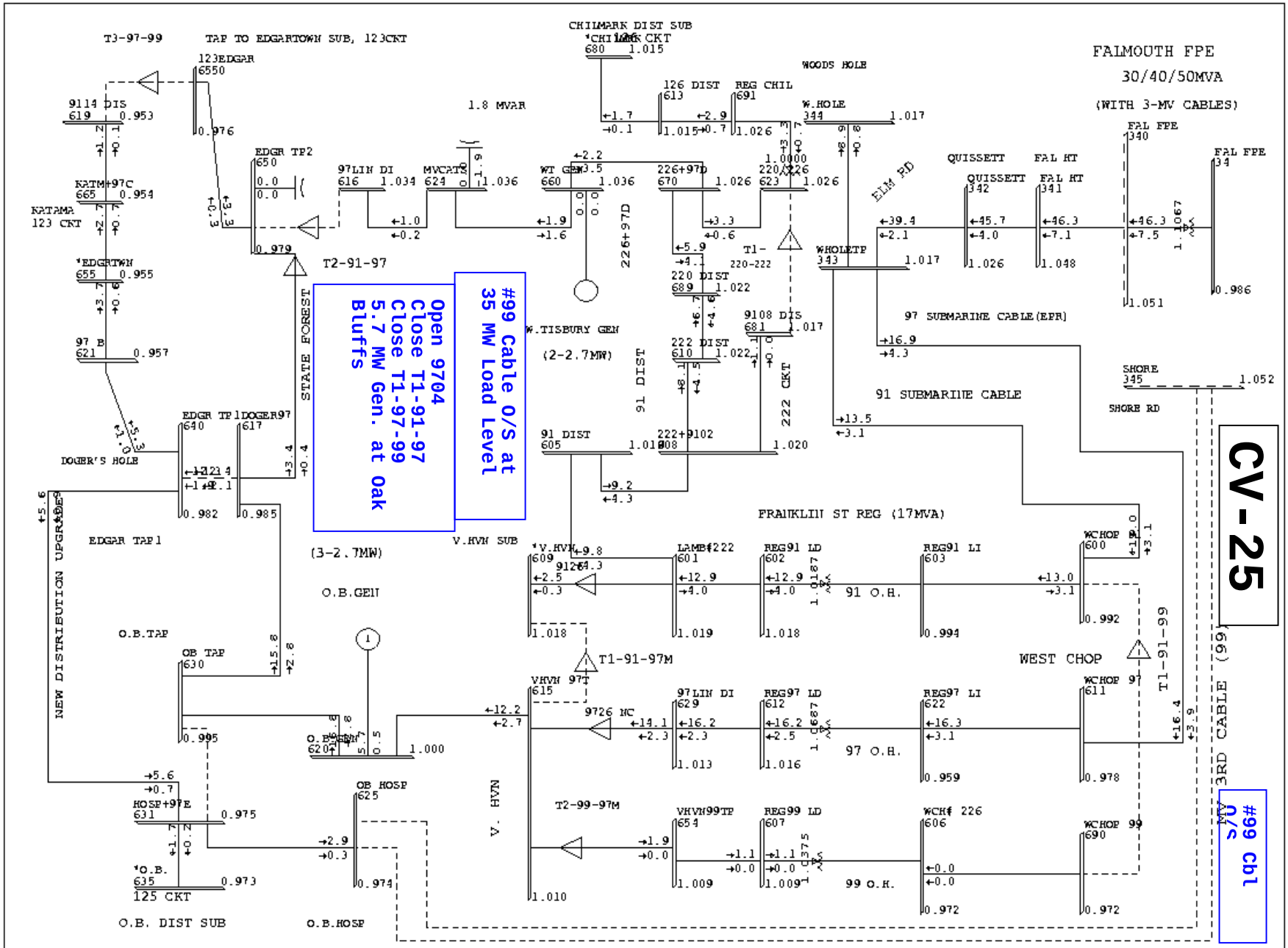
CV-25
#99 Cable O/S at 35 MW Load Level
Open 9704
Close T1-91-97
Close T1-97-99
5.7 MW Gen. at Oak Bluffs
#99 Cbl O/S
T3-97-99
TAP TO EDGARTOWN SUB, 123CKT
123EDGAR
6550
9114 DIS
619
KATM+97C
665
KATAMA
123 CKT
*EDGRTWN
655
97 B
621
EDGR TP2
650
T2-91-97
STATE FOREST
EDGR TP1
640
DOGER97
617
DOGER'S HOLE
EDGAR TAP1
NEW DISTRIBUTION UPGRADE
OB TAP
630
O.B.TAP
O.B.GEN
620
HOSP+97E
631
*O.B.
635
125 CKT
O.B. DIST SUB
OB HOSP
625
O.B.HOSP
97LIN DI
616
MVCATS
624
1.8 MVAR
CHILMARK DIST SUB
*CHILMARK CKT
680
126 DIST
613
REG CHIL
691
WOODS HOLE
W.HOLE
344
WT GEN
660
226+97D
670
220/226
623
226+97D
T1-220-222
220 DIST
689
W.TISBURY GEN
(2-2.7MW)
9108 DIS
681
222 DIST
610
91 DIST
222 CKT
91 DIST
605
222+9102
608
ELM RD
WHOLETP
343
QUISSETT
342
FAL HT
341
FALMOUTH FPE
30/40/50MVA
(WITH 3-MV CABLES)
FAL FPE
340
FAL FPE
34
97 SUBMARINE CABLE(EPR)
91 SUBMARINE CABLE
SHORE
345
SHORE RD
FRANKLIN ST REG (17MVA)
V.HVN SUB
*V.HVN
609
LAMB#222
601
REG91 LD
602
REG91 LI
603
91 O.H.
WCHOP 91
600
WEST CHOP
T1-91-97M
VHVN 97T
615
97LIN DI
629
REG97 LD
612
REG97 LI
622
97 O.H.
WCHOP 97
611
T1-91-99
V. HVN
T2-99-97M
VHVN99TP
654
REG99 LD
607
WCH# 226
606
99 O.H.
WCHOP 99
690
3RD CABLE (99)
2002 SUMMER PEAK FORECAST CAPE CASE
CV PEAK 427 MW EXTREME WEATHER
WED, APR 24 2002 13:18
100 % RATEB
0.950 UV 1.050 OV
KV: ≤23 , ≤345
BUS - VOLTAGE(PU)
BRANCH - MW/MVAR
EQUIPMENT - MW/MVAR

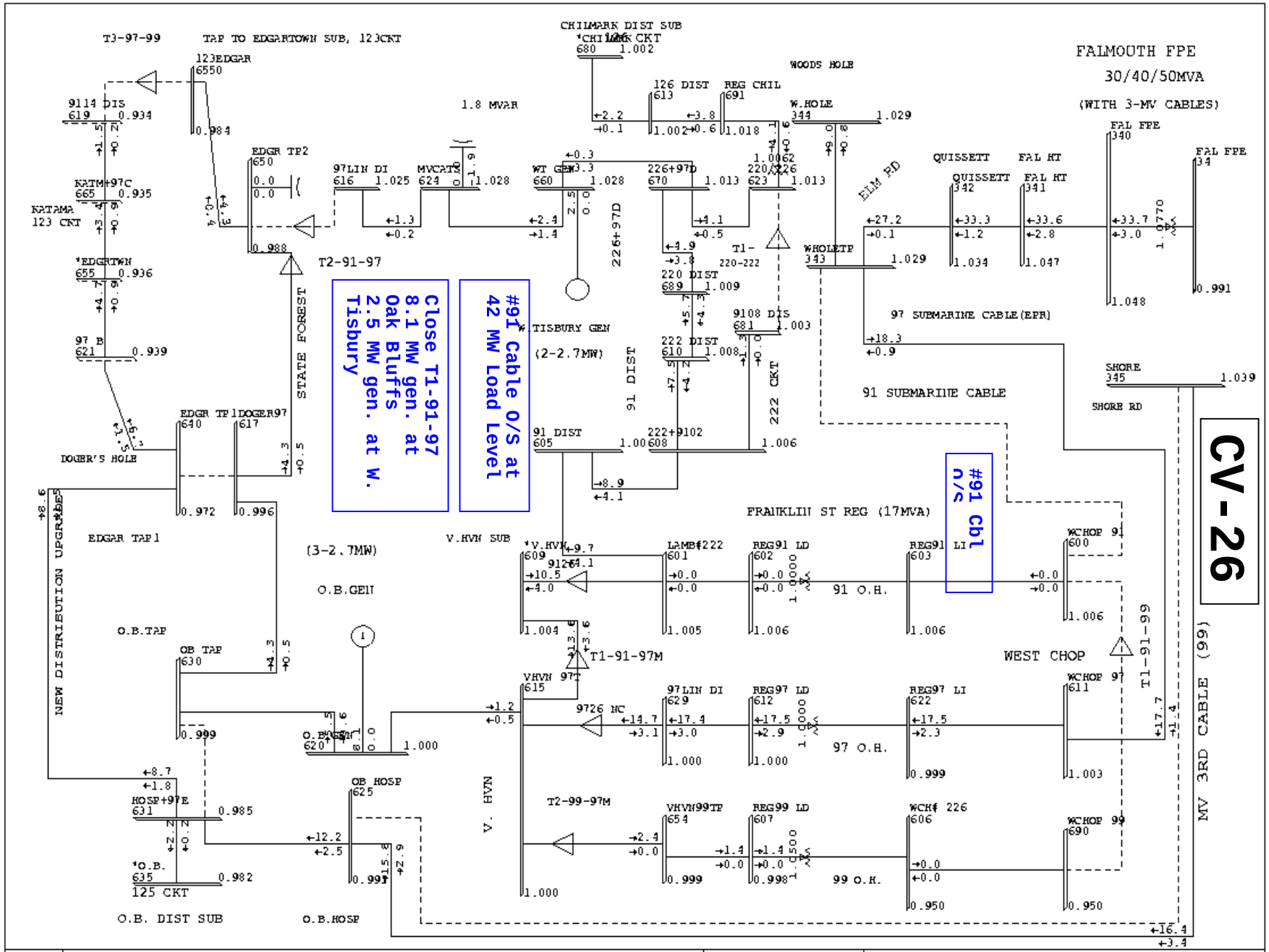

2002 SUMMER PEAK FORECAST CAPE CASE
CV PEAK 427 MW EXTREME WEATHER
MON, APR 22 2002 11:26

100 % RATEB
0.950 UV 1.050 OV
KV: ≤23 , ≤345

BUS - VOLTAGE(PU)
BRANCH - MW/MVAR
EQUIPMENT - MW/MVAR

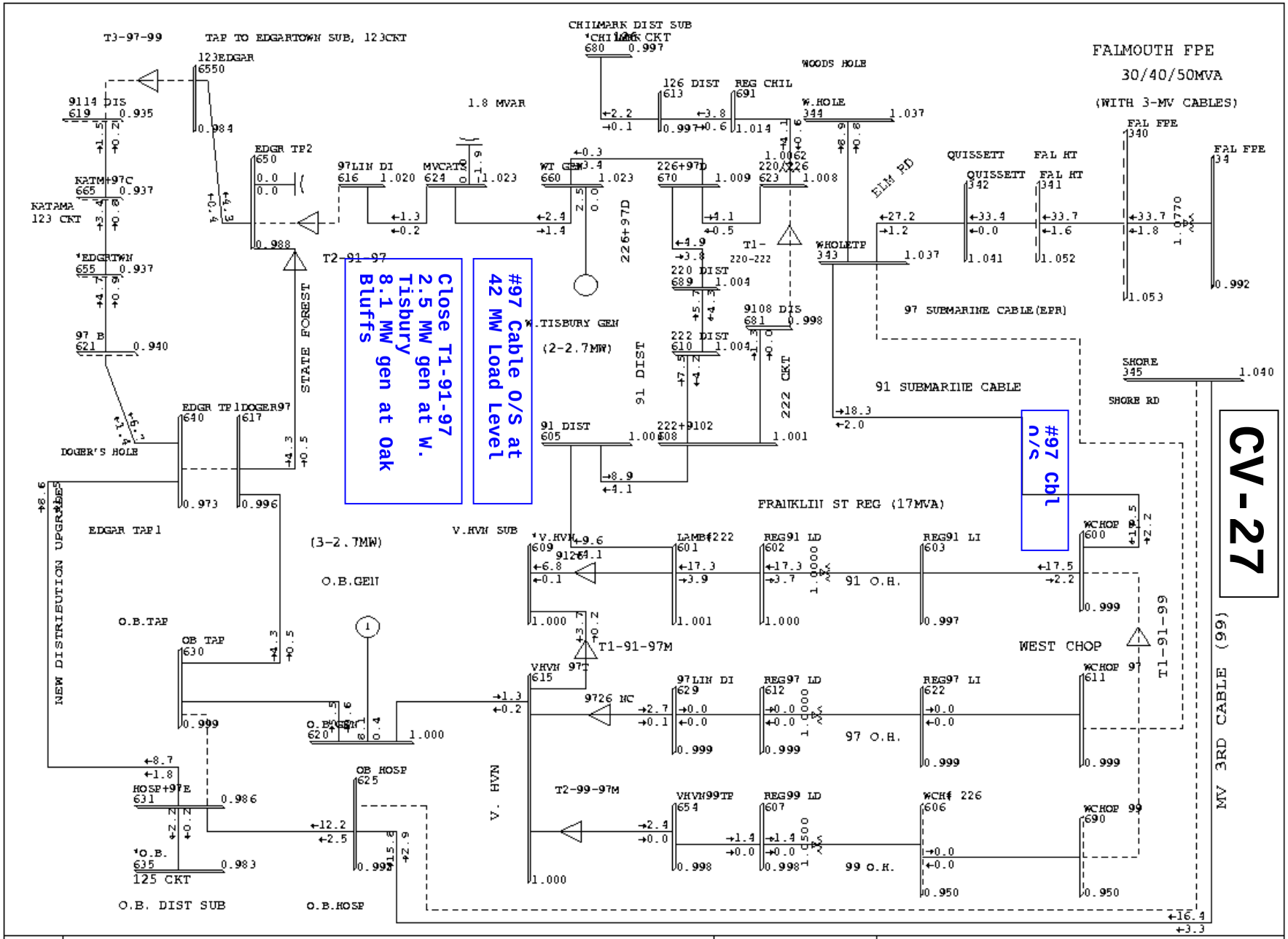

2002 SUMMER PEAK FORECAST CAPE CASE CV PEAK 427 MW EXTREME WEATHER MON, APR 22 2002 11:28	100 % RATEB 0.950 UV 1.050 OV KV: ≤23 , ≤345	BUS - VOLTAGE(PU) BRANCH - MW/MVAR EQUIPMENT - MW/MVAR

CV-28

#99 Cbl o/s

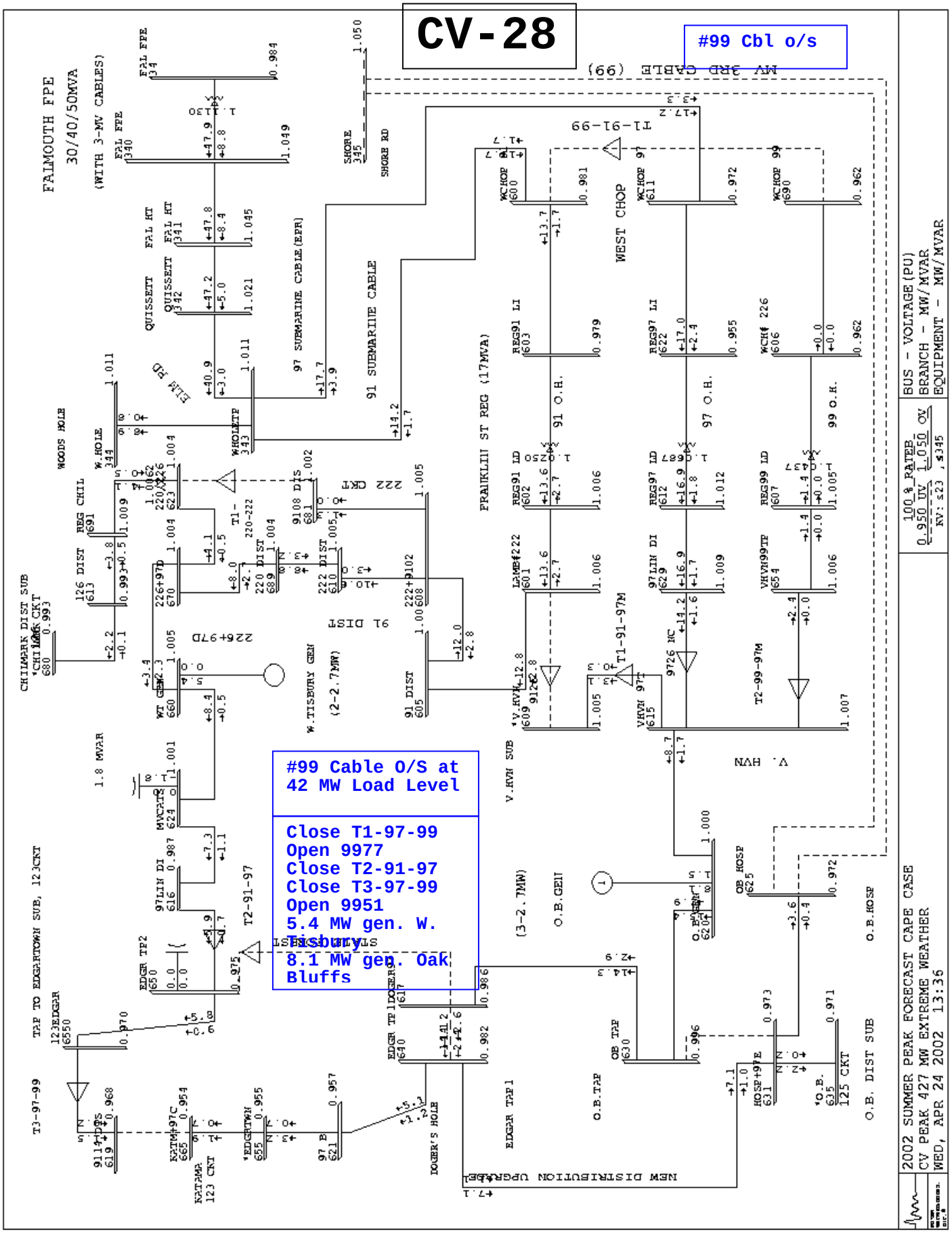

#99 Cable O/S at 42 MW Load Level

Close T1-97-99
Open 9977
Close T2-91-97
Close T3-97-99
Open 9951
5.4 MW gen. W. Tisbury
8.1 MW gen. Oak Bluffs

D.T.E. 03-121
Attachment AG-1-10 (c) (Supplemental)

Appendix D

NSTAR ELECTRIC

2003 MAJOR TRANSMISSION AND DISTRIBUTION IMPROVEMENT PROJECTS

NSTAR ELECTRIC

2003 MAJOR TRANSMISSION AND DISTRIBUTION IMPROVEMENT PROJECTS

The reliability of NSTAR's transmission and distribution system relies upon a determination that the systems are prepared to adequately serve customer load during normal and contingency outage conditions. The 2003 NSTAR Operating Study evaluated the performance of the NSTAR system for the projected 2003 summer-peak load conditions. The results of the Operating Study indicate that the capabilities of the NSTAR transmission and distribution system are adequate for both all-lines-in and post-contingency basis. In accordance with the Operating Study, system performance will generally meet or exceed the NSTAR reliability criteria, however, there are specific points on the system that will require upgrades and infrastructure development to continue to fulfill customer requirements. During 2003, NSTAR will initiate the following major projects to mitigate potential concerns in those areas:

- Oak Street Substation #920, Hyannis
- East Cambridge Substation #875, Cambridge
- New K Street Substation #385D, South Boston
- Cape Transmission Project -- 2nd Canal to Bourne Auto and 115 kV Line

This report provides a description of each project, analyzes the need for the improvement, and evaluates the alternatives considered to resolve the identified concern.

Oak Street Substation (#920), Hyannis

Project Description & Objectives (Including Strategic Fit):

This project calls for the construction of a new, 115kV to 23kV bulk distribution substation at Oak Street in the Town of Barnstable. The new substation will involve the addition of a new 30/40/50 MVA transformer bank, 115kV circuit switcher, 23kV buswork with three (3) 23kV feeder positions, control house, and associated protective relaying, metering, control wiring, foundations, and additional required equipment.

The proposed substation will be sited on NSTAR-owned land on Oak Street in W. Barnstable along a transmission right-of-way that supports three (3) 115kV lines and two (2) 23kV distribution supply system (DSS) feeders.

The proposed substation improves distribution supply in the mid-Cape power supply area for the Towns of Barnstable, Mashpee, Sandwich, and Barnstable, in accordance with NSTAR's established reliability criteria.

Scope & Justification:

The addition of this new substation is required to improve distribution capacity for the Towns of Barnstable, Yarmouth, Sandwich, and Mashpee, and to address potential normal and single-contingency distribution supply deficiencies in this area of the Cape.

- The projected normal (all lines in) Summer peak load at the Mashpee Substation exceeds both the normal and long-term emergency (LTE) ratings of the station's transformer. Loads can be transferred from Mashpee Substation to the Hyannis Substation during extreme Summer peak conditions to avoid overloads on this transformer. This however is not the recommended solution as such load transfers are preferably reserved for dealing with contingency outage conditions.

- For a single-contingency outage of one 115kV to 23kV bulk transformer at the Hyannis bulk substation, the 2nd transformer may see loadings beyond its LTE rating despite all possible load transfers to other substations via the 23kV distribution supply system. Load in excess of the rating of the remaining transformer may need to be shed to avoid excessive loading of the remaining station equipment.

- For a single-contingency outage of the same Hyannis transformer bank as described above, a 23kV distribution supply line out of Sandwich substation may see loading beyond its LTE rating. Load in excess of the rating of this line may need to be shed to avoid excessive loading of the remaining distribution lines.

Alternatives Considered:

Alternatives considered, and subsequently rejected, are as follows:

1. Upgrade the smaller (30/40/50 MVA) transformer bank to 45/60/75 MVA at Hyannis Junction. While it is a less expensive alternative than the proposed solution ($2.4 million versus $4.0 million estimated), the overload condition at Mashpee substation would not be solved with this alternative.

2. Upgrade the Mashpee 20/26/33 MVA transformer bank to a 30/40/50 MVA transformer, and upgrade 9.7 miles of 23kV DSS line from 477 ACSR to 795 ACSR conductor for an estimated $2.8 million. While less expensive than the estimated $4.0 million for the proposed project and it solves the deficiency at Mashpee Substation, does not effectively solve the deficiencies at the Hyannis and Sandwich Substations.

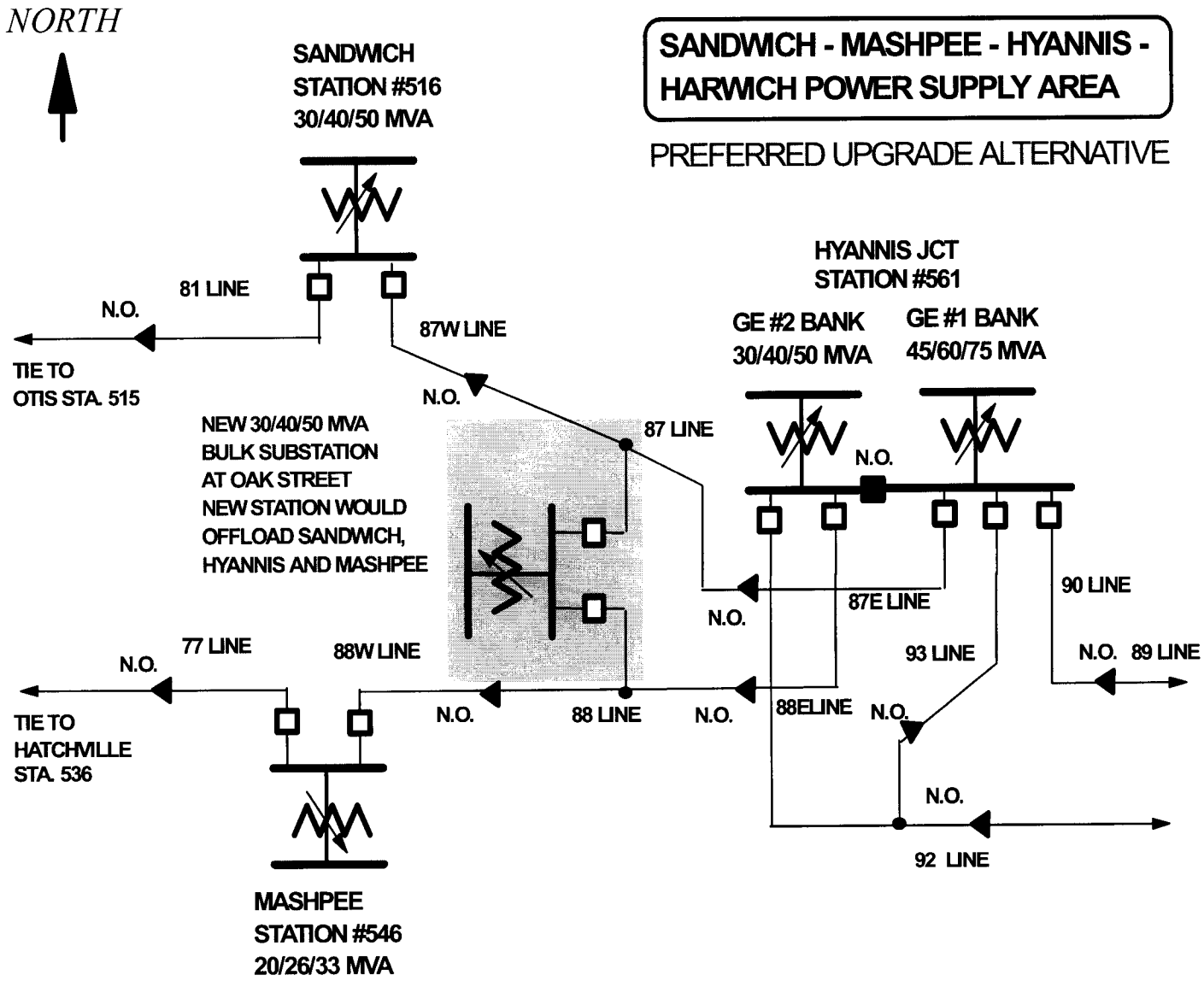
NORTH
SANDWICH - MASHPEE - HYANNIS - HARWICH POWER SUPPLY AREA
PREFERRED UPGRADE ALTERNATIVE
SANDWICH
STATION #516
30/40/50 MVA
81 LINE
N.O.
TIE TO
OTIS STA. 515
87W LINE
N.O.
HYANNIS JCT
STATION #561
GE #2 BANK
30/40/50 MVA
GE #1 BANK
45/60/75 MVA
NEW 30/40/50 MVA
BULK SUBSTATION
AT OAK STREET
NEW STATION WOULD
OFFLOAD SANDWICH,
HYANNIS AND MASHPEE
87 LINE
N.O.
N.O.
87E LINE
90 LINE
77 LINE
N.O.
88W LINE
93 LINE
N.O. 89 LINE
TIE TO
HATCHVILLE
STA. 536
N.O.
88 LINE
N.O.
88ELINE
N.O.
N.O.
92 LINE
MASHPEE
STATION #546
20/26/33 MVA

New East Cambridge Station #875 Substation

Project Description & Objectives:

The initial phase of the proposed East Cambridge Substation project consists of installing sufficient facilities to supply the customers in the Kendall load area in the City of Cambridge. The other two phases of substation expansion will be needed to address the long-term needs of load growth in the East Cambridge area. The new substation will be located in close proximity to both the existing and future customer load centers and to the existing customer feeders located at Kendall Station. Significant load growth has been identified as occurring in this immediate area through developments such as Lyme properties, which is currently under construction. The substation and associated distribution infrastructure will be developed to coincide with the anticipated load growth within the Kendall Square region.

There are several strategic and operational benefits provided by the new East Cambridge substation. This new substation will enable NSTAR Electric to utilize the 115kV system as its transmission backbone for the supply to the 13.8kV distribution system within East Cambridge. At present, NSTAR Electric uses the existing13.8kV system in Cambridge for both transmission and distribution. Further expansion of the 13.8 kV system as a transmission system has been determined as both infeasible and uneconomic. Additionally, the removal of generation directly connected to the 13.8 kV system and introduction of new 115kV transmission and substation supply capabilities will significantly reduce the amount of short circuit current available to the 13.8kV system. This has been a growing and significant concern for the design and operation of facilities in this part of the Cambridge system. The new East Cambridge substation will alleviate this concern. See Fig. 1 at the end of this document for a simplified one-line that illustrates the above condition.

The proposed new source will completely address both the immediate load growth concerns as well as the loss of generation at Kendall Station.

Scope:

Transmission:

Phase I for 2003 in service date:

Install one (1) 115kV solid dielectric cable from the new substation to the Mirant terminal structure and terminate at both ends.

Phase II for 2004 in service date:

Install one (1) 115kV solid dielectric cable from Putnam to the new substation and terminate at both ends.

Phase III for 2005 in service date:

Re-route one (1) 115kV solid dielectric cable (generator lead) from Mirant terminal structure to the new substation and terminate at substation via MH #7. The above cost figure includes $8.0 million payment to Mirant.

Substation:

Phase I for 2003 in service date:

- Install four (4) 115kV GIS breakers (vendor has this equipment available for immediate delivery)
- one (1) –115/14kV - 37.5/50/62.5 [70/75] MVA transformer
- one section of 14kV distribution switchgear and XY DSS circuits.

Phase II for 2004 in service date:

- Install one (1) –115/14kV - 37.5/50/62.5 [70/75] MVA transformer
- one section of 14kV distribution switchgear and relocation of some of the XY DSS lines in Phase I.

Phase III for 2005 in service date:

- Install one (1) –115/14kV - 37.5/50/62.5 [70/75] MVA transformer
- one section of 14kV distribution switchgear relocation of some of the XY DSS lines in Phase II.

Distribution:

Phase I for 2003 in service date:

Install distribution 6 lines (2 cables each) to existing switchgear in Kendall Station.

Phase II for 2004 in service date:

Re-route half of the distribution lines to new switchgear.

Phase III for 2005 in service date:

Re-route 2 of the distribution lines to new switchgear, and re-locate Potter Street LCU

The complete proposed bulk substation in East Cambridge #875, (see Fig. 2 at the end of this document,) will be supplied from the 115 kV Transmission system that was built to connect the Kendall Re-powering Project. The additional 115kV solid dielectric cable is being installed into an existing duct system.

Justification:

The existing firm supply capacity in the East Cambridge and Somerville areas is 175MVA. This capacity includes 63 MVA capability at Somerville Station #402, 37 MVA from Putnam Station #831 and 75 MW of generation capacity from Kendall Station #800. The peak load in this area was 175MVA in 2002 and is expected to be 186 MVA by 2003. The new substation when complete will provide firm capacity of 150 MVA.

The area firm will be 276 MVA which is expected to provide sufficient capacity for supplying the area beyond 2010.

MIRANT has modified the design of the existing steam generators at Kendall Station resulting in a requirement that they be dispatched during operation of the new combustion turbine (CT). This design introduces an interdependency that will result in loss of the entire generating source, including the existing steam units for lost of the CT generator. The loss of the 63MW of existing steam generation, as illustrated in the table above will result in a significant reduction in the Kendall region's capacity.

Even with MIRANT maintaining existing generation at 13.8kV (as stated above with a new contract), the impending load growth would require a major investment in a new source in the system by 2004 - 2005. The forecasted load growth in this area is based on the fact that this vicinity has the last available open space in Cambridge for residential and commercial property development and the city wants it to be developed.

Map of Kendall Supply Area

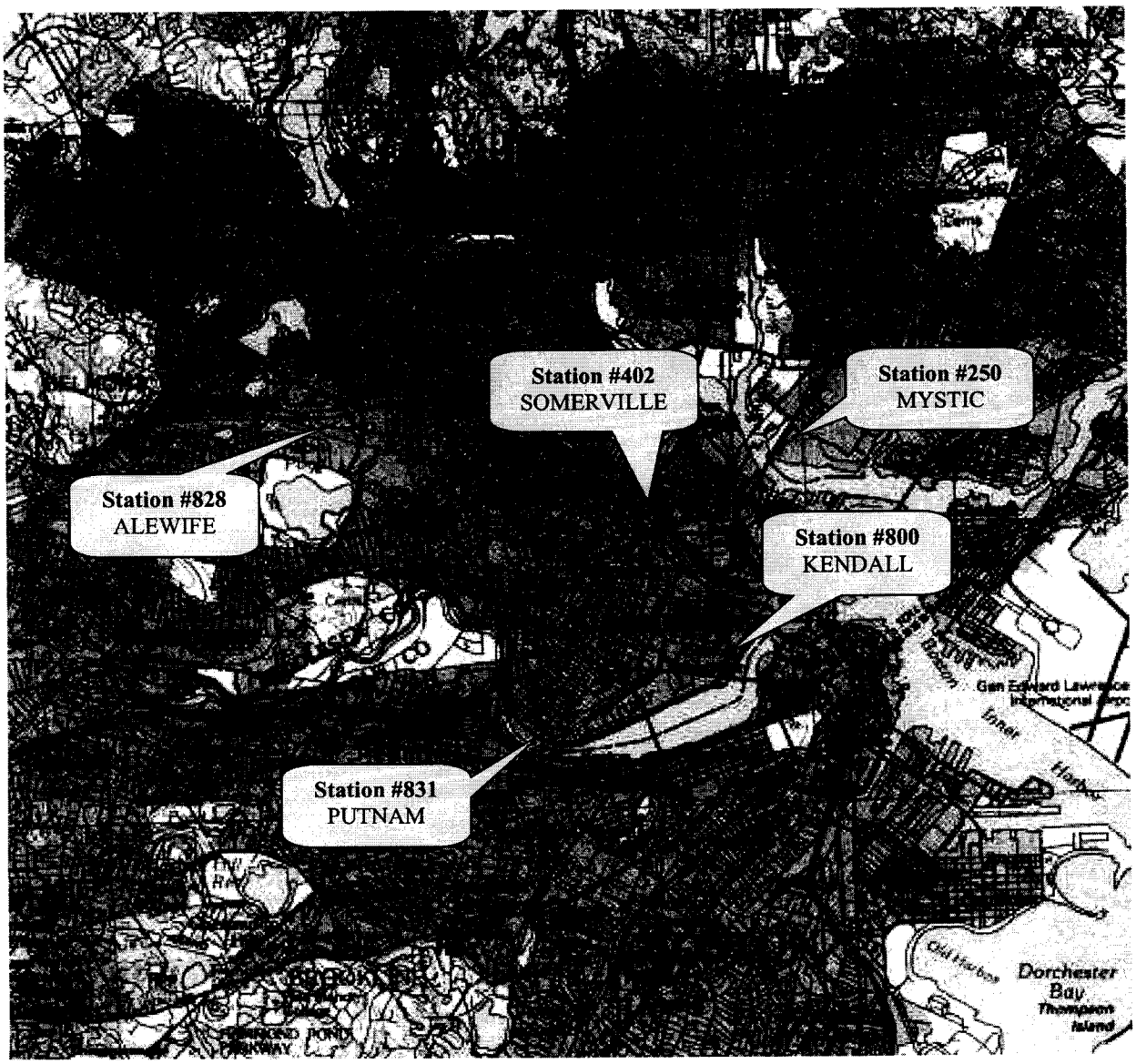

Table of Kendall load area:

Kendall Load Area of East Cambridge & Somerville: Load Projections/Supply (MVA)

Year	2002	2003	2004	2005	2006	2007	2008	2009	2010	2011
Projected Load	175	186	195	205	214	224	228	233	239	244
LCC w/o New Resource	175	138	119	119	119	119	119	119	119	119
Load at risk	0	48	76	86	95	105	109	114	120	125
LCC with New Resource		194	201	276	276	276	276	276	276	276
Load at risk		0	0	0	0	0	0	0	0	0

2002 LCC based on:
63 MVA Firm capacity from Somerville Station #402
75 MVA Firm capacity from 2 steam generators and 2 jet engine generators
37 MVA supply capacity from Putnam Station via 6 - 13.8 kV cables
175 MVA Total

2003 LCC based on: (reflecting Mirant's revised operational constraints)
63 MVA Firm capacity from Somerville Station #402
38 MVA Firm capacity from 2 jet engine generators
37 MVA of supply capacity from Putnam Station via 6 - 13.8 kV cables
138 MVA Total

2003 LCC based on: (new East Cambridge Substation Phase I construction completed)
63 MVA Firm capacity from Somerville Station #402
75 MVA Supply capacity from 1 transformer
19 MVA Supply capacity from 1 jet engine generator
37 MVA of supply capacity from Putnam Station via 6 - 13.8 kV cables
194 MVA Total

2004 LCC based on: (with East Cambridge Substation Phase I & II completed)
126 MVA Firm capacity from Somerville Station #402
75 MVA Firm capacity from new East Cambridge Substation #875
201 MVA

2005 LCC based on: (with East Cambridge Substation Phase III completed)
126 MVA Firm capacity from Somerville Station #402
150 MVA Firm capacity from new East Cambridge Substation #875
276 MVA Total

Alternatives Considered:

The initial investigation and analysis considered well in excess of 30 alternatives of which the remaining three acceptable alternatives were evaluated in depth as lowest cost remedies to the East Cambridge/Somerville supply deficiency. They are summarized below:

Alternative # 1 - Recommended Solution – East Cambridge Substation @ Mirant

Build a new 115/13.8kV East Cambridge Substation #875 with the capability of supporting existing loads at Kendall #850, and Prospect #819 at Kendall Station site. The Project would be comprised of the following:

Quantity	Description
2	Transmission lines UG rated at 250MVA at 115kV (one already installed for Mirant's Kendall re-powering)
1	GIS with a maximum of 6 breakers, in a ring configuration, to accommodate the 3 lines & 3 transformers.
3	13.8kV switchgear sections with a maximum of ten (10) feeder breakers per bus section, a main breaker, and a bus-tie breaker
3	115/13.8kV transformers 37.5/50/62.5[70] MVA each with emergency rating at 75MVA each for a total capacity of 210MVA and a firm capacity of 150MVA
1	Relaying, control, and battery systems
1	Set of walls with no roof to encompass the above equipment
1	Distribution work to support existing load at Kendall #850 and Prospect #819 from the new substation

The estimated cost for Kendall Station is estimated at $32.4 million

PROS:

- The supply is close to the load (new and existing).
- The station would use new 115kV infrastructure that has ample capacity. (There is a new 115kV line installed for the Kendall re-powering project and it has spare ducts installed that will be used for another cable to provide a primary and secondary feed to the new substation or equipment in the Mirant yard).
- Provides the fastest placement of resources in the Kendall load area.
- Provides a phased in approach so as not to overly burden the capital budget of the company in any one year.

CONS:

- Real Estate issues:
  - The Kendall site has minor and controllable environmental concerns. Requires relinquishing what has been determined as minimal transmission revenue.
  - Requires the moving of the Potter Street LCU when we release the easement on the property at Third Street.

Alternative # 2– East Cambridge Substation @ 5th Street

Build a new 115/13.8kV East Cambridge Substation #875 with the capability of supporting existing loads at Kendall #850, and Prospect #819 at 5th Street site. The Project would be comprised of the following:

Quantity	Description
2	Transmission lines UG rated at 250MVA at 115kV. One is already installed for Mirant's Kendall re-powering and would extended to 5th Street. One would be installed from Putnam #831 to the new station at 5th Street and a cable would be required from 5th Street to the Kendall generator.
1	Distribution work (longer runs) to support existing load at Kendall #850 and Prospect #819 from the new substation

Rest of equipment is identical to Alternative #1 above.

The estimated cost for 5th Street is estimated at $36.6million

PROS:

- The supply is close to the load (new and existing).
- Provides the fastest placement of resources in the Kendall load area.
- Provides a phased in approach so as not to overly burden the capital budget of the company in any one year.
- Would not require the moving of the Potter Street LCU on the property at Third Street.

CONS:

- The 5th Street site has environmental concerns.
- Developer that purchased land would not be required to pay $2 million to the Company for our relinquishing the easement on the property. There is additional transmission costs associated with this site. In addition, a filing with the EFSB would be required, due to distance that the lines from Kendall would be extended, and could take up to a year for approval.

Alternative # 3 – Upgrade Prospect Station #819

Upgrade the switching station Prospect Street #819 to a bulk substation by adding 115/13.8kV transformation, and upgrading the existing 13.8kV switchgear would be comprised of the following:

Quantity	Description
1	115kV source of transmission had several options and the best is to tap the existing lines that pass by the station, loop them in and out of the station, and add a radial line from Mystic #250 to the station. This meets the capacity requirement but adds equipment at the station and requires DTE approval and extensive construction ($6.3 million estimated for increase of 210MVA capacity + $1.7 million for loop tap). There is one existing spare pipe under the Mystic River, thus filing for a new crossing would not be required for this upgrade. Filing for the street work would be required.
1	GIS with a maximum of 8 breakers to accommodate the lines & transformers
2	115/13.8kV transformers with two (2) secondary windings rated at 37.5/50/62.5MVA each with emergency rating at 70MVA each for a total firm capacity of 140MVA
4	Replace 13.8kV switchgear with upgraded all breakers and busses with customer load off of it
1	Relaying, and control systems
1	Distribution work to supply existing load at Kendall #850 from the new upgraded substation
1	Set of walls to contain the transformers and GIS

The estimated cost for the Prospect Street expansion is $41.2 million

PROS:

- Transmission, looping the existing lines in to the station from the street, is less than a mile probably requiring no regulatory approval.

CONS:

- The supply is not as close to a majority of load (new and existing) as the Recommended Solution.
- The company owns most of the needed Real Estate However, due to the high short circuit current the 115kV breakers and connecting bus are larger and therefore more land is needed to accommodate the breakers. Adjacent Land has been assumed to be available at $500,000, approximately twice the assessed value.
- Requires the moving of the Potter Street LCU when we release the easement on the property at Third Street.

- The 13.8kV switchgear is under rated and needs to be replaced, which will require a construction sequence that will be in terms of months rather than days Customer reliability would be at risk during this time.
- Transmission will need to be upgraded from Mystic #250 since Sithe generation cannot be backed down sufficiently to remove overloads for a loss of line contingency.

Existing System One-Line:

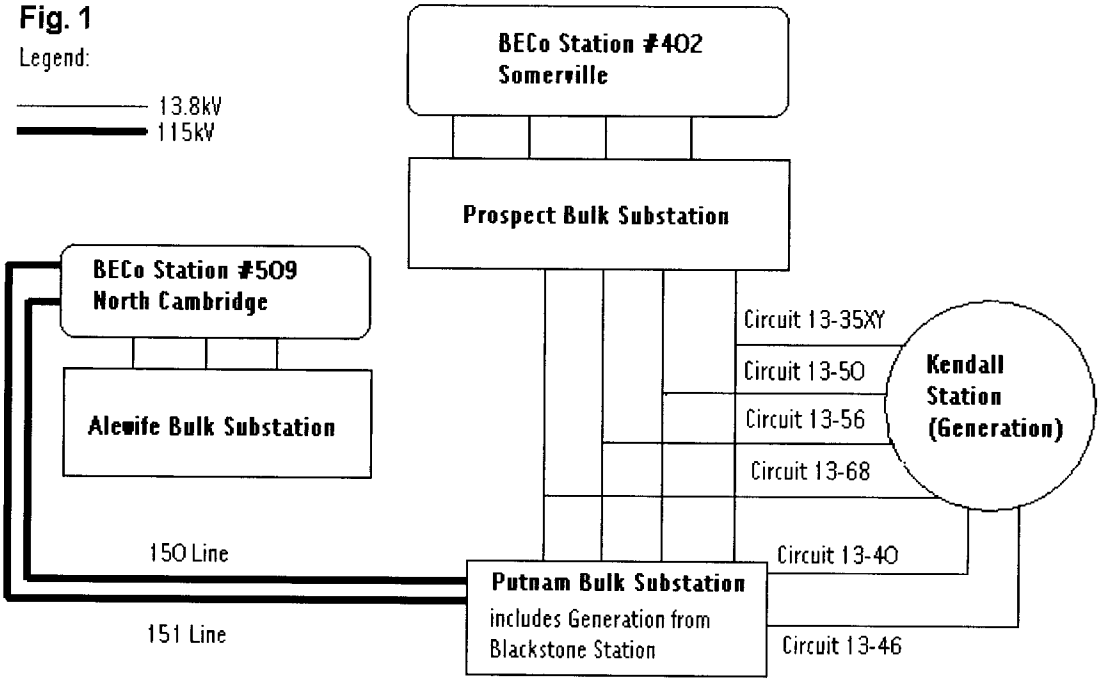

Phase III System One-Line:

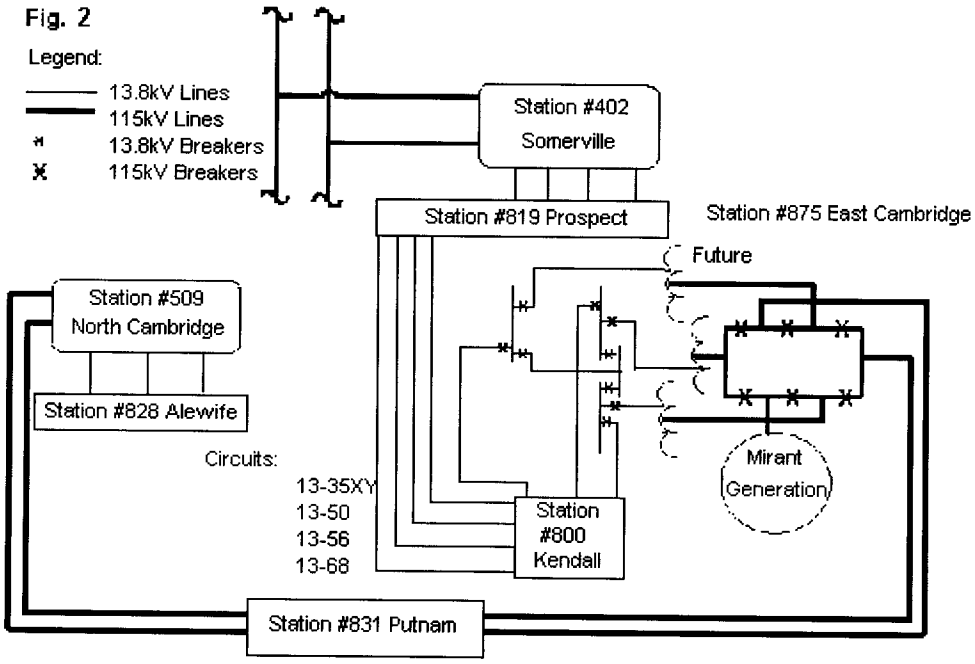

New K Street Substation #385D – South Boston Waterfront Supply

Project Description & Objectives (Including Strategic Fit):

The proposed project consists of building a new 115/14 kV substation at K Street, on NSTAR land that is adjacent to the existing Station #385 K Street. The substation and associated distribution infrastructure will be developed to coincide with the anticipated load growth within the South Boston area, including the Waterfront region. The initial firm capacity of the new K Street station will be 75 MVA (Phase 1 In-service date 2003) through the installation of two 115/14 kV 62.5 MVA transformers. The station will be designed to accommodate an ultimate firm capacity of 225 MVA. The additional capacity will be provided through the installation of a third and fourth 115/14 kV 62.5 MVA transformers (Phase 2 In-service date 2004). The installation of the initial distribution infrastructure will commence in Fall 2003 and continue thorough Spring 2004. The development of the new K Street 115/14kV substation will support both the eventual retirement of L Street Station #4 by transferring loads presently supplied form L Street to K Street, thereby addressing a future potential reliability concern, as well as the anticipated load growth within the South Boston Region, including Andrew Square Station #106.

Scope:

K Street Station #385 Transmission Work ($3.0 Million)
The project scope includes the installation of four (4) new 115 kV solid dielectric cables from K Street, Station #385 approximately 1000 feet for each cable to the new K Street substation transformers, located on NSTAR property adjacent to Station #385. Each cable will be designed and sized to support the long-term emergency capability of the 115/14kV transformer, 75 MVA of capacity.

Phase 1 (2003 In-service)
Install two (2) 115 kV solid dielectric cables to supply two 115/14 kV 62.5 MVA transformers at the new K Street distribution substation.

Phase 2 (2004 In-service)
Install a two additional 115 kV solid dielectric cables to supply the third and fourth 115/14 kV 62.5 MVA transformer at the new K Street distribution substation.

K Street 115/14kV Substation (Distribution station)
Develop a new outdoor 115/14 kV substation on NSTAR land adjacent to K Street, Station #385. The initial firm capacity of the station will be 75 MVA. The station will be designed to accommodate an ultimate firm capacity of 225 MVA.

Phase 1 (2003)– 75 MVA Initial Firm Capacity
The new K Street 115/14kV station will consist of:

- Two (2) - 37/50/62.5 MVA LTC Transformers
- Four Distribution Metal Clad Switchgear Sections – thirty-two (32) - DSS/Distribution Feeders. Four of the distribution feeders will be equipped with 800 amp series reactors- reduces short circuit duty.
- Two (2) -14.4 kV 9.6 Mvar Station capacitor banks
- Control House
- Scada RTU

Phase 2 (2004) – Increase Firm Capacity to 225 MVA
The expansion of the new K Street 115/14kV station will consist of:

- Install a third and fourth 37/50/62.5 MVA LTC Transformer
- Four Distribution Metal Clad Switchgear Sections – thirty-two (32) - DSS/Distribution Feeders. (Phase 1 & 2 Total – 64 DSS/Distribution Feeders).
- Four (4) -14.4 kV 9.6 Mvar Station capacitor banks

L Street Substation and Transmission Retirements
The scope of work for the proposed retirements will consist of:

L Street Station #4

- Drain oil and dispose of Transformers 110A, 110B, 110C,110D and the two station service transformers
- Drain oil and dispose of L and G buses oil circuit breakers
- Dismantle and remove all L and G bus breaker cells.

Transmission

- Drain oil and dispose of cable for the 115 kV supply lines to the former L Street Station #4 Transformers 110A, 110B, and110C/110D.

Permitting
In support of the K Street distribution station there will be permitting related to Massachusetts Environmental Policy Act Chapter 91. The scope of work will include the actual permitting process, the reconstruction of the K Street seawall and the construction of public access to the water required by Chapter 91 permitting.

South Boston Waterfront Distribution System
This part of the project consist of four distinct components:

1. Cutover of 37 existing distribution lines from L Street Station #4 to the new K Street substation.
2. Distribution infrastructure to support 25 MVA of load relief from Andrew Square Station #106 to the new K Street distribution substation.
    a. Transfer of Station #139, Dorchester Avenue, South Boston to K Street -- reuse the cable for discontinued lines 4-0018, 4-0025 and 4-0023, and install 20 sections of new cable (3500 ft)
    b. Transfer of distribution circuits 106-H2 and 106-H3 to the new K Street Station – install 100 ft of conduit and 20 sections of cable (4200 ft), equipped 2 padmount switches with RADSEC capability

3. Re-supply of the L Street Sta #4 "n bus" switchgear to support the Sithe L Street including the L Street jet.
4. New distribution infrastructure to supply the Boston Convention Exposition Center.
   - 5 DSS Lines – Boston Convention Exposition Center

The new distribution infrastructure will be developed with adequate conduit to allow incremental expansion to coincide with the future region's load requirements.

Justification:

L Street Station #4 and Andrew Square Station #106 supply the South Boston section of the city of Boston (refer to enclosed regional diagram). This region continues to experience load growth.

L Street Station #4 (115/14 kV) serves a power supply area consisting of South Boston and the non-network load within portions of the South Station and Back Bay sections of the City of Boston. During the Summer 2002, the L Street Station #4 peak load was 113 MVA. L Street Station #4 consists of four 115/13.8 kV transformers. The station has a firm capacity of 140 MVA. There is no transfer switching to adjacent substations. L Street's load carrying capability (i.e. firm capacity + transfer switching) is 140 MVA.

Andrew Square Station #106 serves a power supply area consisting of the South Boston, South End and Roxbury regions of the City of Boston. During the Summer 2002, Andrew Square Station #106 peak load was 142 MVA. Andrew Square Station #106 consists of four 115/13.8 kV transformers. The station has a normal capacity of 160 MVA and a firm capacity of 120 MVA. There is no transfer switching to adjacent substations. Andrew Square's load carrying capability (i.e. firm capacity + transfer switching) is 120 MVA. Andrew Square currently employs an on-site 40 MVA spare transformer to provide emergency capacity under contingency conditions.

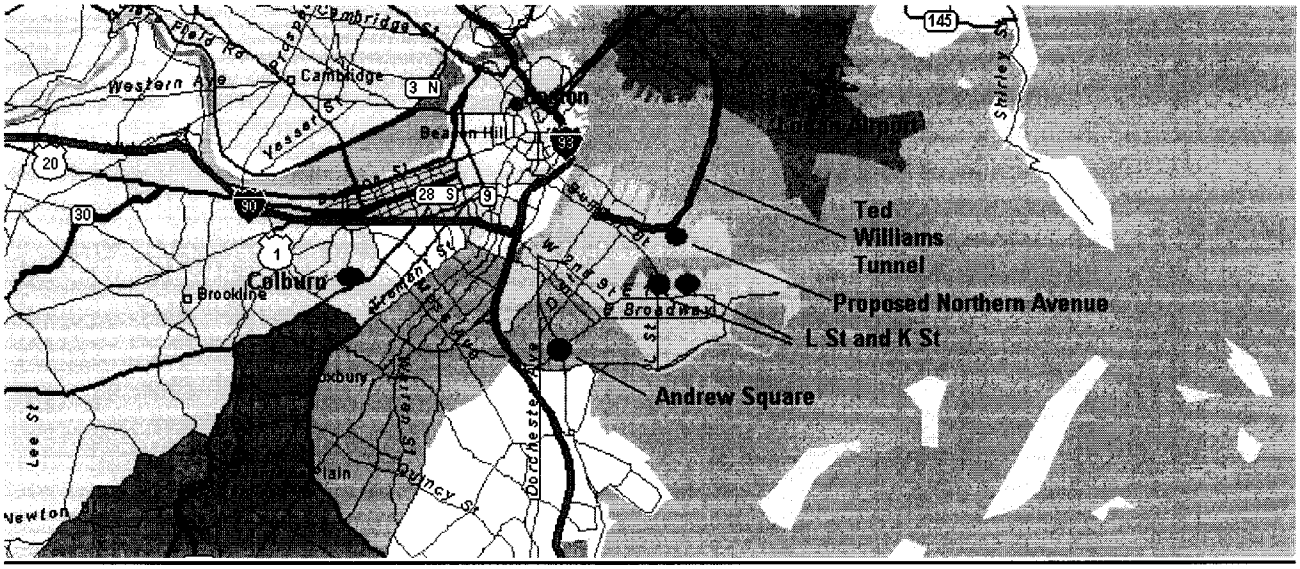

L Street Station #4 Reliability Concerns

L Street Station #4 was built in stages from 1896-1922. During the early to mid 1960's with the construction of the New Boston generating units and the retirement of L Street 14 kV generators, Station #4 was re-powered with four 115/14kV transformers. These are the same transformers presently supplying L Street and are in good condition for their age. We have completed preventive maintenance, including reprocessing the oil for these transformers. These mitigation actions should enable these transformers to continue to reliably supply L Street Station #4 for the foreseeable future. With the exception of these transformers and the installation of a small number of air circuit breakers during the 1960's most of the station equipment has remained unchanged since the 1930's. The 14kV oil circuit breakers are more than 70 years of age, are labor intensive to maintain and have experienced some electrical control problems (i.e. fail to close/fail to trip). There is no supervisory control. The inoperable breaker (i.e. stuck breaker) relay protection system is a very old design and relies on transformer overload relays to detect a stuck breaker. L Street's dated equipment requires extraordinary maintenance and operational efforts, which add to the ongoing cost of this station.

The vintage of L Street Station #4's facilities and infrastructure do pose some reliability concerns due to the difficulty in finding suitable replacement equipment, which could be a concern with respect to the performance of the region's power supply. The ABB "Substation Hardening Project – L Street Station", dated January 31, 2002 recommended that L Street Station#4 be refurbished/reconstructed to existing standards to support up to 140 MVA of load.

Thermal analysis of the L Street station #4's distribution cable getaways identified potential concerns in the duct banks on East First Street to support load levels above 130 - 140 MVA.

Load Capacity Needs -- Supply of the South Boston Region

The South Boston region continues to experience load growth. Many of the properties are being redeveloped for new economic uses. Much of the impetus for the development comes from the region's proximity to the Boston financial district, the downtown waterfront and new transportation infrastructure. The developers in the South Boston Waterfront region are essentially building a small city. The Waterfront region is evolving through various developmental stages. The district will be a highly mixed area including office buildings, hotels, residential condominiums, retail shops, restaurants and entertainment that will maintain a lively set of activities both day and evening. The ongoing developments throughout South Boston will substantially increase the load within the South Boston region. The projected probable new load will likely be 35-45 MVA by the middle of this decade. This new load will strain the capability of both the Andrew Square Station #106 and L Street Station #4 substation and distribution infrastructure to support the customer load requirements. New substation capacity and distribution infrastructure will be required to support the load growth in South Boston.

L Street Station #4 -- Load (MVA):

Year → Station	2002 MW	2003 MW	2004 MW	2005 MW	2006 MW	2007 MW	2008 MW	2009 MW	2010 MW	2011 MW	2012 MW
L Street Station #4 Load	113	121	139	143	146	154	161	170	178	185	192
Load Carrying Capability	140	140	140	140	140	140	140	140	140	140	140
Potential Deficiency of Load not being served:				(3)	(6)	(14)	(21)	(30)	(38)	(45)	(52)

The above table shows the projected load on L Street Station #4 for a 10-year period based on the probable New Waterfront load additions and the projected deficiency between load and supply. Based on load projections, starting in 2005 the L Street and South Boston Waterfront region's load is expected to exceed the 140 MVA LCC of Station #4.

Andrew Square Station #106 -- Load (MVA):

Year → Station	2002 MW	2003 MW	2004 MW	2005 MW	2006 MW	2007 MW	2008 MW	2009 MW	2010 MW	2011 MW	2012 MW
Andrew Square Station #106 Load	142	152	154	156	157	160	163	167	171	173	175
Load Carrying Capability	120	120	120	120	120	120	120	120	120	120	120
Load Carrying Capability w/ Spare in Service	160	160	160	160	160	160	160	160	160	160	160
Potential Deficiency LCC / LL+S	(22) / 0	(32) / 0	(34) / 0	(36) / 0	(37) / 0	(40) / 0	(43) / (3)	(47) / (7)	(51) / (11)	(53) / (13)	(55) / (15)

The above table shows the projected load on Andrew Square Station #106 for a 10-year period based on the probable load additions and the projected deficiency between load and supply. Due to continued heavy load growth within the Andrew Square supply region, the Andrew Square Station #106 load exceeds the 120 MVA LCC of Station #106 and is expected to exceed the LCC plus spare equipment capacity by 2007.

Should all of the known South Boston Waterfront projects occur, there is the potential for 40 MVA of new load by 2006 in addition to the 35-45 MVA of probable load.

The Phase 1 development of the new K Street115/14kV substation will provide 75 MVA of firm capacity. By the summer 2004 the region's load supplied by the new K Street distribution station is projected to exceed the 75 MVA firm capacity. Phase 2 with a 2004 In-Service date will install the third and fourth 62.5 MVA transformers and increase the New K Street station firm capacity to 225 MVA.

The development of the new K Street 115/14kV substation will provide 225 MVA of firm capacity and depending upon the region's load growth would support the L Street Station and future near term South Boston Waterfront region load growth, including the Boston Convention and Exposition Center and Fan Pier. When fully loaded to 225 MVA the new K Street substation will have a capacity utilization of 90%, as compared to L Street Sta #4's potential capacity utilization of 62%.

Considering the close proximity of the new K Street 115/14kV substation to L Street Station #4, Station #4's inherent reliability concerns, the K Street 115/14kV station will support the retirement of L Street Station #4. The new K Street station will provide a measure of load relief of Andrew Square Station #106, approximately 25 MVA.

Alternatives Considered:

Engineering has performed a comprehensive supply study to determine the optimal long-term solution. The study evaluated well in excess of twenty options, which consisted of the use of existing substations, expanding existing substations and constructing new substations within the South Boston Waterfront region and various combinations. The alternatives considered included:

1. **Expand Andrew Square Station #106 and relieve L Street Station #4 by permanent load transfers to Andrew Square.** Limited land is available at Andrew Square Station #106 to support the required expansion. No conduit exists between Andrew Square Station #106 and the South Boston Waterfront region. There are significant infrastructure issues and egress concerns in developing the required distribution system to supply the South Boston Waterfront load. During the 1999-2002 time period the Andrew Square supply region has experienced continued steady load growth. As a result of this load growth, the Andrew Square Station exceeds its firm capacity and will require load relief. This alternative does not provide adequate capability to support the retirement of L Street Station #4 or new South Boston load.

2. **Relieve L Street Station #4 by load transfers to the Downtown Boston Network substation, specifically High Street Station #53 and Chatham Street Station #12.** Extend DSS lines from the network substations into the Fan Pier area of South Boston. This alternative could support some of the new South Boston load. The estimated cost is $4 Million. This option does not have adequate capacity to support the 113 MVA of existing load presently supplied by L Street Station, it does not address the L Street reliability concerns. These stations also serve downtown Boston load and use of this capacity would limit the ability to serve new load in the downtown Boston area.

3. **Refurbish L Street Station #4.** This option will refurbish L Street Station #4 ageing civil and electrical infrastructure. The work increases L Street's Firm capacity from 140 MVA to 150 MVA and addresses the L Street reliability concerns. The estimated cost of the L Street Station #4 refurbishment is $17.2 Million. The option by itself does not provide adequate capability to support the South Boston load growth. This option would require another substation be developed within the South Boston Region at an additional cost of $50-$70 Million.

4. **Develop a new South Boston Waterfront Enclosed 115/14KV Station in the vicinity of the Boston Convention and Exposition Center.** This site would be centrally located to the load and result in shorter distribution feeders to supply the load. The land for this substation site must be acquired. The firm capacity of this substation would be limited to 150 MVA. This alternative is a near-term solution that supports the retirement of L Street Station #4 and a small portion of the initial load growth within the South Boston region. The estimated cost is $57 Million (assumes $7,000,000 million for land acquisition). This option would require another substation be developed within the South Boston Region at an additional cost of $50-$70 Million.

5. **Develop a K Street open–air 115/14KV substation on NSTAR land adjacent to K Street Station #385.** The substation and associated distribution infrastructure will be developed to provide expanded substation capacity to supply loads within the South Boston region. The initial firm capacity of the new station will be 150 MVA (Phase 1 In-Service date of 2003), which supports the retirement of L Street Station #4 and the initial load growth within the South Boston. The station will be designed to accommodate a firm capacity of 225 MVA. This alternative is part of an integrated long-term solution, which will provide the necessary capacity additions needed to meet the new load requirements as well as insure the reliability of service of this area.

The study has determined a K Street open-air 115/14KV substation is the preferred solution.

2003 NSTAR Major Projects

New K Street Substation – South Boston Waterfront Supply

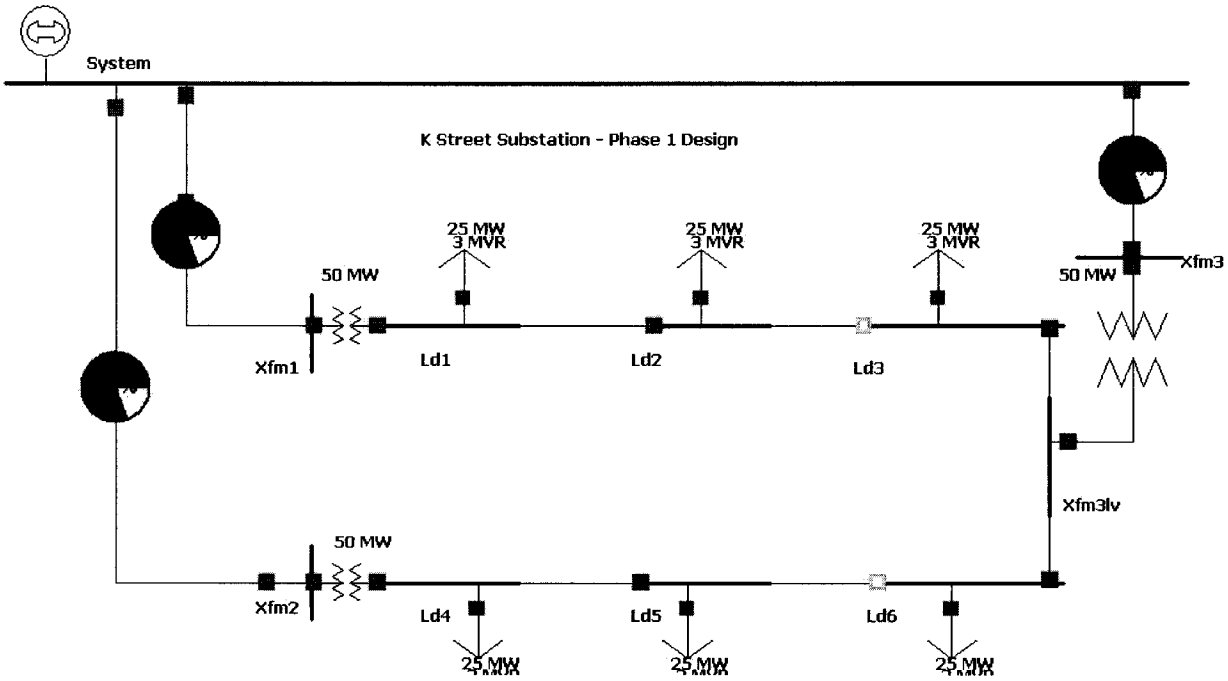

Cape Transmission Project -- 2nd Canal to Bourne Auto and 115 kV Line

Project Description & Objectives (including Strategic Fit):

In the Summer 2003, the Canal to Bourne #121 345/115kV autotransformer is projected to encounter loading beyond its 485 MVA LTE limit for a single-contingency outage of the Canal to Barnstable #120 autotransformer and 115kV transmission line. These two autotransformers comprise two of the three autotransformers supplying the NSTAR/South service territory, and comprise two of five sources into the NSTAR/South 115kV transmission system.

Also, starting Summer 2003, the Canal to Bourne #121 autotransformer is projected to encounter loading beyond its 485 MVA LTE limit for a single-contingency outage of the Carver autotransformer in the Plymouth District.

Scope

The 2nd Canal to Bourne autotransformer and line are required to improve transmission capacity for the Cape District, and for the NSTAR/South service territory as a whole, which is comprised of 41 municipalities in Southeastern Massachusetts.

Justification

NSTAR's Cape District is served by several 345/115kV transmission facilities and by thirteen (13) bulk substations.

The NSTAR 115kV transmission system is fed from the New England 345kV EHV system via three (3) autotransformers. The three transformers, in conjunction with two 115kV tie lines, operate together to feed the 115kV transmission system of Commonwealth Electric, and tend not be segregated by individual District loading patterns:

- The #121 line and autotransformer offers a connection between the Canal 345kV ring bus and the Bourne Switching Station, located in the upper Cape near the Cape Cod Canal. The Bourne Switching station serves as a load center serving the Cape via two (2) 115kV lines heading South and East, and for the Plymouth and New Bedford Districts via two (2) 115kV lines heading West across the Canal.

- The #120 line and autotransformer connects the Canal 345kV ring bus at the Barnstable Switching Station, located mid-Cape in Barnstable. The Barnstable switching station serves as a load center for the mid- and lower-Cape areas.

2003 NSTAR Major Projects

Year → Area	2002	2003	2004	2005	2006	2007	2008	2009	2010	2011	2012
Cape District	449	455	462	472	479	490	510	521	532	543	555
NSTAR Total	883	906	928	949	966	987	1030	1054	1078	1098	1124

- The Carver autotransformer offers a 345kV connection and load injection point in NSTAR's Plymouth District, with 115kV lines heading back to the Cape through the Tremont Switching Station and serves the Plymouth and New Bedford areas.

Forecasted substation loading in megawatts for the Cape District (including Nantucket) and NSTAR as a whole is summarized in the Table below. Please note that the Cape District forecasted peak is non-coincident with the NSTAR forecasted peak.

The actual Cape District peak load in 2002, including Nantucket load, was 480 MW. Over the past five years, 1997 through 2002, the Cape District load growth has averaged from 4.8% to 6.5% per year. Therefore for the purposes of this analysis, a nominal 5% Cape load growth was used for the 2003 total Cape District load, including Nantucket, which resulted in a projected combined load of 504 MW. The forecast for this area of the system is currently under review to establish a more technically sound set of forecast values. The analysis presented here was conducted more to establish the loading levels at which future upgrades may be needed then to establish the specific year in which such upgrades would need to completed.

First, starting in Summer 2003**, for a sudden loss of the Canal-Barnstable #120 autotransformer or 115kV transmission line (19.1 miles), the #121 Canal-Bourne autotransformer and line will exceed its 485 MVA long-term-emergency (LTE) rating at 118 %, with 93 MW of load at risk. The overload will increase to 119% of LTE by Summer 2004, with 133 MW of load at risk.

** This result assumes the following:

Interruptible loads such as non-firm service provided to National Grid's Nantucket Electric Company (approximately 30 MW) have not been shed to relieve loading on the #121 autotransformer.

Additional shunt reactive compensation, such as switched capacitor banks, are installed at Barnstable Switching Station to hold acceptable voltages.

With load shedding of Nantucket the loading of the 121 autotransformer, in 2003, is 112% of its LTE rating following the loss of the 120 autotransformer and an additional 67 MW of Cape load needs to be shed in order to bring the 121 auto loading below its LTE rating.

Second, starting Summer 2004**, for the sudden loss of the Carver 345/115kV autotransformer in the Plymouth District, the #121 Canal to Bourne autotransformer will exceed its 485 MVA long-term-emergency (LTE) rating at 103%, with 33 MW of load at risk (without shedding Nantucket load).

Third, starting in Summer 2007**, for a sudden loss of the Canal-Barnstable #121 autotransformer or 115kV transmission line, the #127 SEMASS Tap to Carver 115kV line in the Plymouth District will exceed its 398 MVA long-term-emergency (LTE) rating at 104%. The limiting element on this line is terminal equipment at the substation and not the conductor.

The loss of one of the three (3) autotransformers and the various Cape District 115kV supply facilities has been extensively analyzed in the past. Upgrades that address the following deficiencies have been deemed necessary:

- An increase in autotransformer capability. Emergency overload ratings are already applied to three autotransformers. The addition of a fourth autotransformer somewhere in the NSTAR system would be required.
- An enhancement in transmission or transformer capability to Cape District. Loss of the #120 line into Barnstable can result in system voltage collapse prior to SCADA switching of system capacitor banks.

Alternatives Considered

Alternative #1 (Recommended Solution)

- Extend the 345kV ring bus at Canal with a 3rd 345 kV bay with three circuit breakers.
  Install the spare West Walpole 345/115 kV autotransformer, currently stored at West Walpole, at the Canal 345 kV Substation and connect to a breaker position on the new on the new bay (see Figure 2). Figure 1 is a one line of the existing Canal 345 kV Substation. There is space at the Canal substation to extend the 345 kV bus and install a 345/115 kV autotransformer.

- String a new circuit (labeled 126) on the "blank" side of the existing #122 double circuit tower structures by running 2.5 miles of 2338 ACAR conductor between

Canal and Bourne. The existing 120 autotransformer will be reconnected to feed the new Canal to Bourne line in parallel with the #121 autotransformer.

- Relay modifications at Bourne 115 kV and Barnstable 115 kV Substations for the installation of the new auto-transformer.

- Reconnect the existing Canal to Bourne 121 autotransformer to a new position on the 3rd bay via 345 kV underground cable.

The net result would be the addition of a fourth autotransformer to the NSTAR system and improved firm transmission support to the Cape District.

PROS: Fourth 345/115kV autotransformer added to NSTAR system avoids overload of #121 autotransformer for loss of the #120 autotransformer.

The overload of the 121 Canal to Bourne autotransformer for the loss of the Carver 345/115 autotransformer starting in 2004 will be avoided.

Firm supply capacity to the Cape area increased to 607 MW.

CONS: none.

Alternative #2

Similar to Alternative #1 except install the old North Cambridge transformer, presently in service at the Woburn 345 kV Substation, instead of the West Walpole autotransformer as the 3rd autotransformer at Canal connected to the 120 line.

PROS: Fourth 345/115kV autotransformer added to NSTAR system avoids overload of #121 autotransformer for loss of the #120 autotransformer.

The overload of the 121 Canal to Bourne autotransformer for the loss of the Carver 345/115 autotransformer starting in 2004 will be avoided.

Avoid possible voltage collapse on the Cape system for the loss of the Canal to Barnstable 120 autotransformer or line.

Firm supply capacity to the Cape area increased to 575 MW.

CONS: The firm supply to the Cape District is 32 MW less for this alternate than the firm supply capability in Alternate #1.

The LTE rating, without derating, for the old North Cambridge autotransformer use in the analysis is 423 MVA. It is possible that due to gassing problems this transformer has a lower LTE rating of 370 MVA. At an LTE rating of 370 MVA the firm supply capability to the Cape District only 530 MW.

The transportation cost to relocate the old North Cambridge auto to the Canal Substation is more expensive that relocating the West Walpole auto by approximately $200,000.

FIGURE 1 – Existing Canal 345 kV Substation

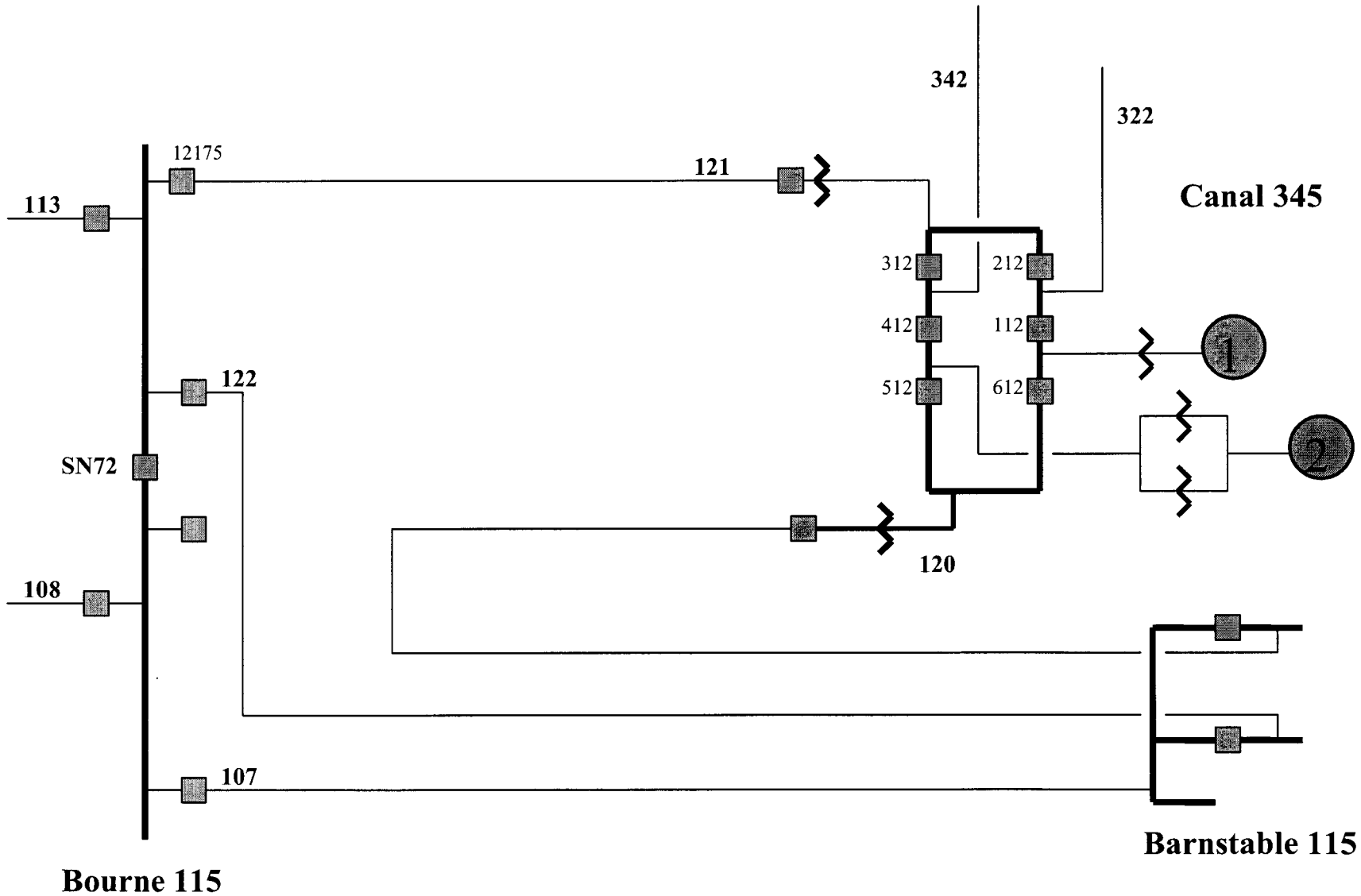
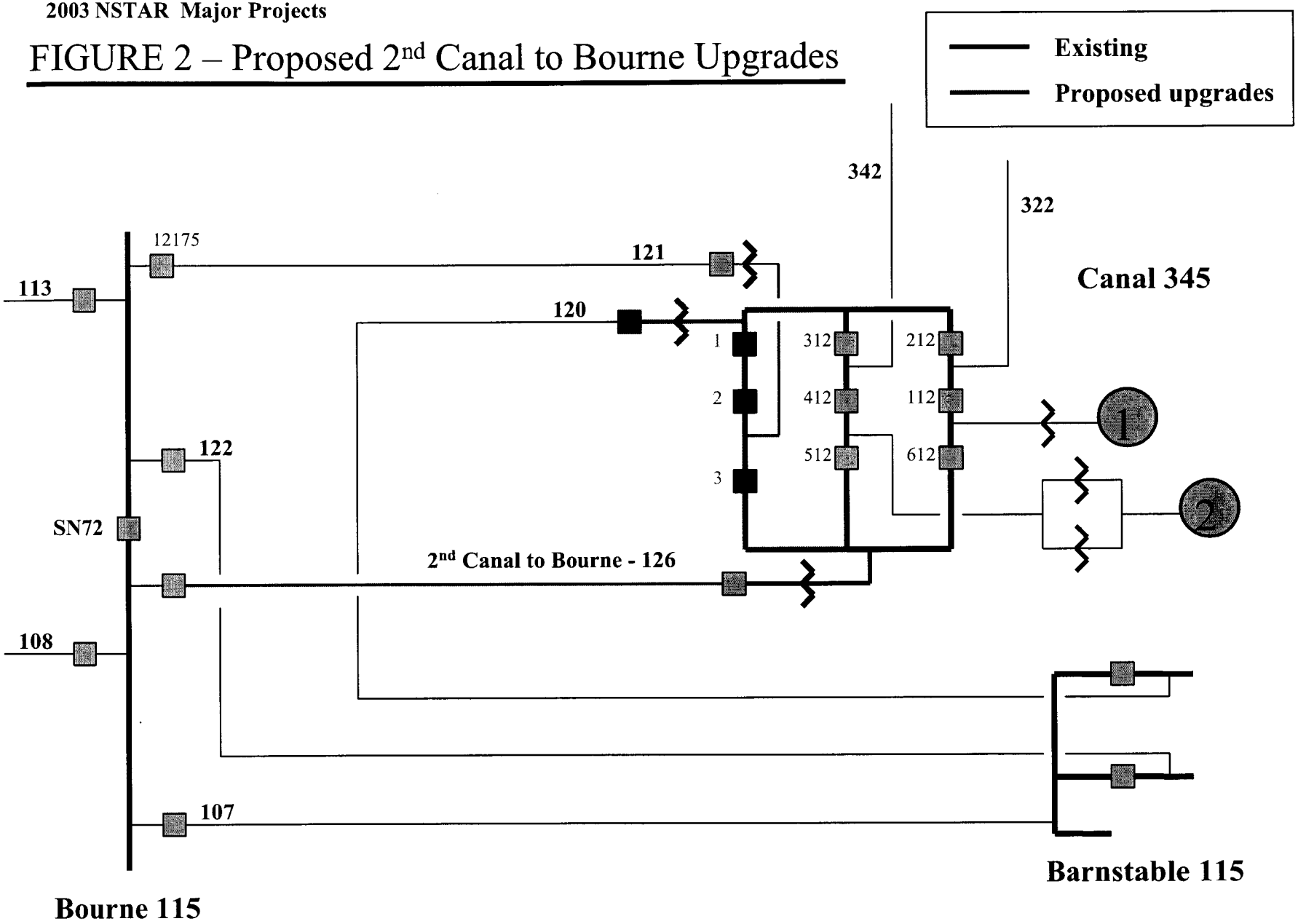
FIGURE 2 – Proposed 2nd Canal to Bourne Upgrades