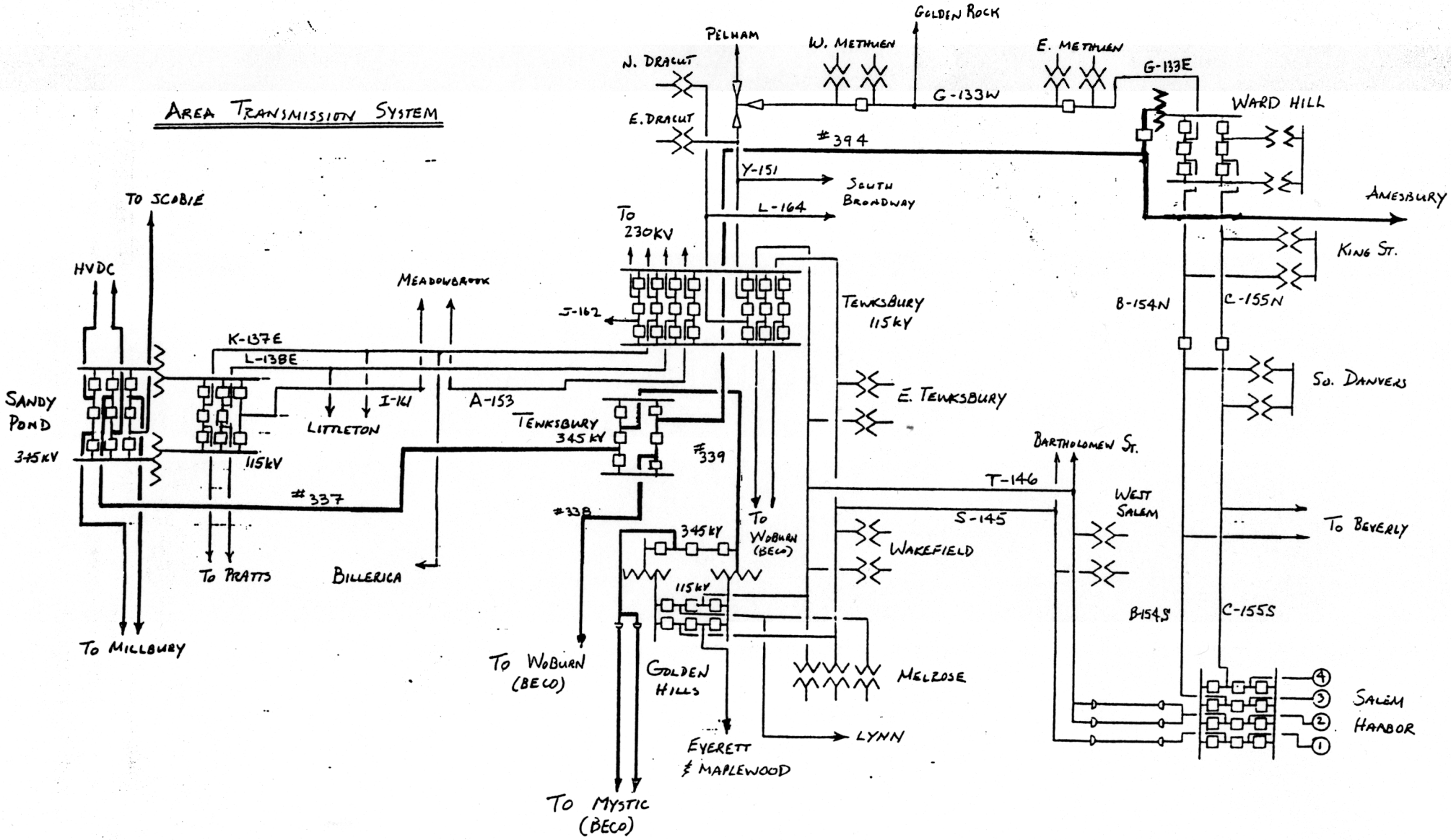
AREA TRANSMISSION SYSTEM
GOLDEN ROCK
PELHAM
W. METHUEN
E. METHUEN
N. DRACUT
G-133E
G-133W
WARD HILL
E. DRACUT
#394
Y-151
SOUTH BROADWAY
L-164
AMESBURY
TO SCOBIE
TO 230KV
KING ST.
HVDC
MEADOWBROOK
J-162
TEWKSBURY 115KV
B-154N
C-155N
K-137E
L-138E
SO. DANVERS
SANDY POND
I-161
A-153
E. TEWKSBURY
LITTLETON
TEWKSBURY 345 KV
345KV
115KV
#339
BARTHOLOMEW ST.
T-146
#337
WEST SALEM
#338
S-145
TO WOBURN (BECO)
345KV
TO BEVERLY
WAKEFIELD
TO PRATTS
BILLERICA
115KV
B-154S
C-155S
TO MILLBURY
TO WOBURN (BECO)
GOLDEN HILLS
MELROSE
SALEM HARBOR
EVERETT & MAPLEWOOD
LYNN
TO MYSTIC (BECO)