Optimal runoff

60' x 180' Perimeter - 8 students

Minimal runoff

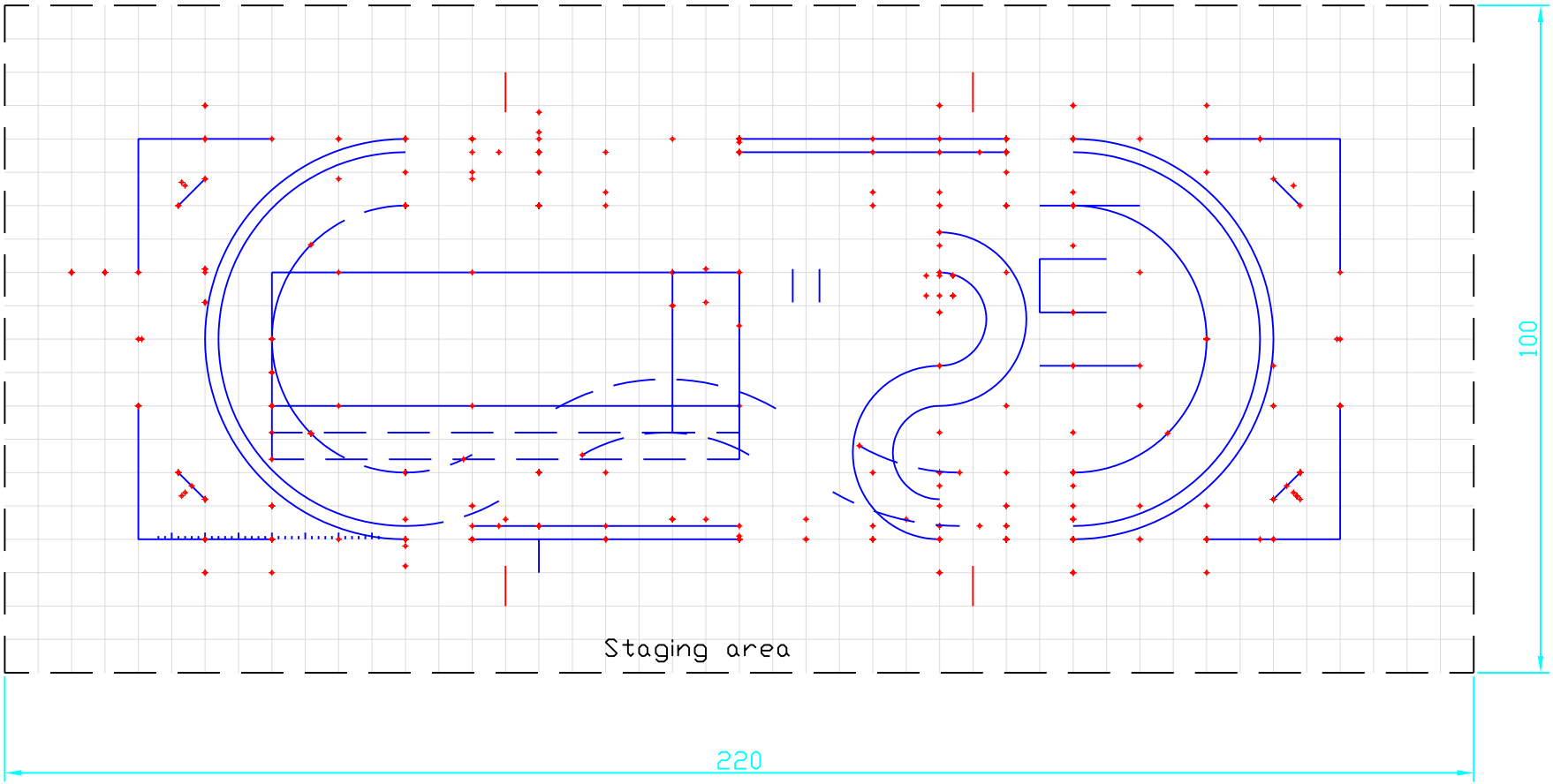

Optimal runoff
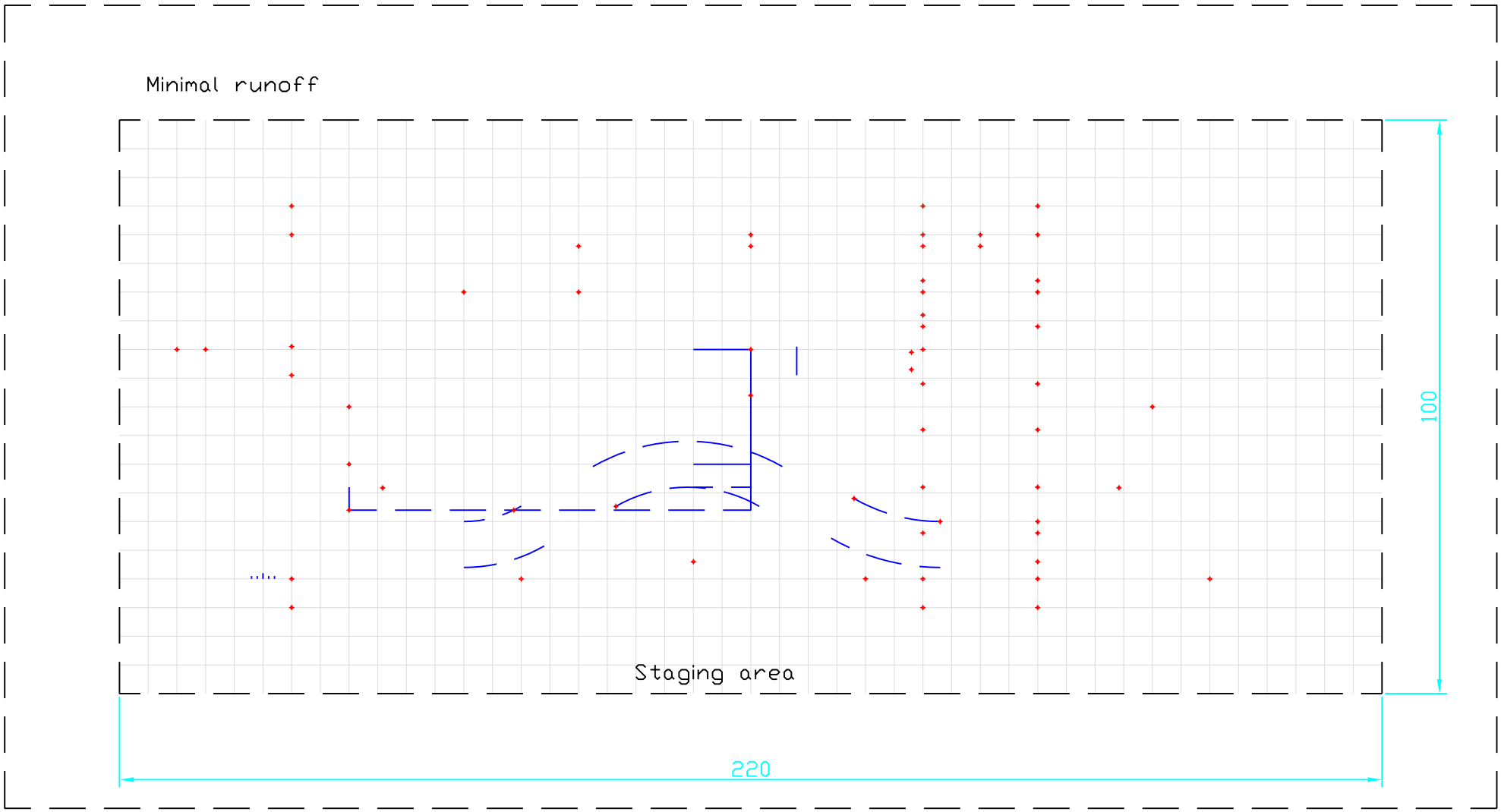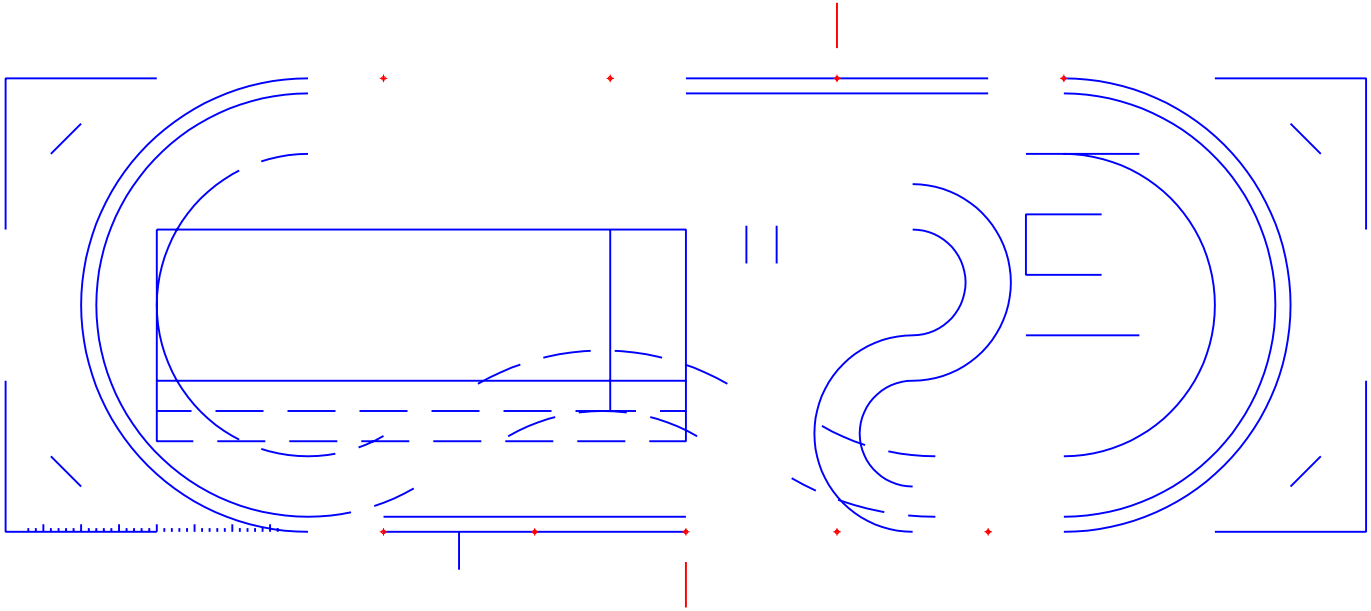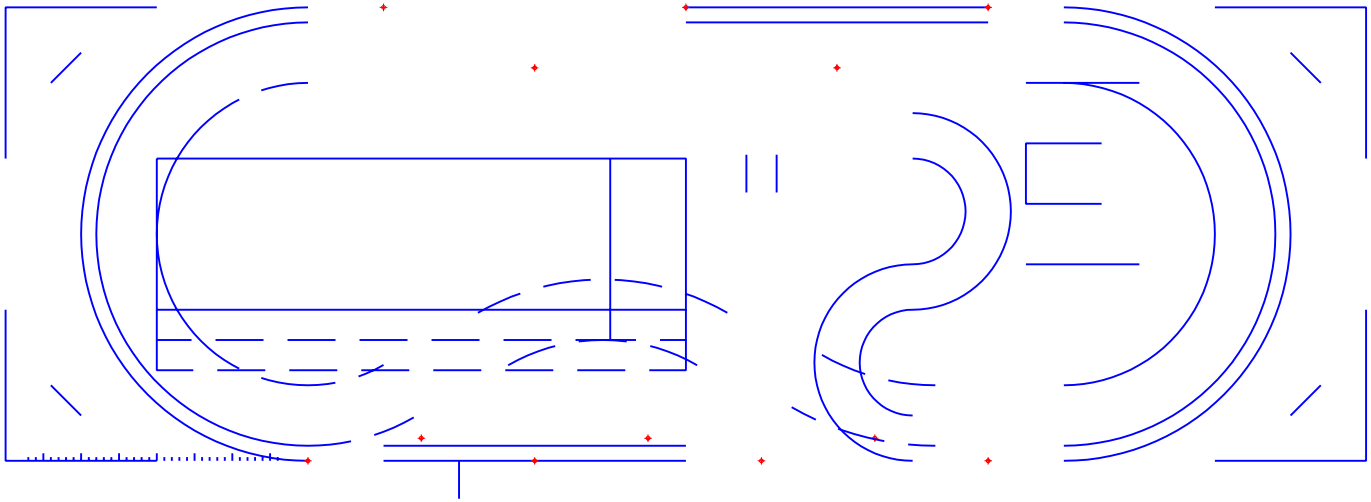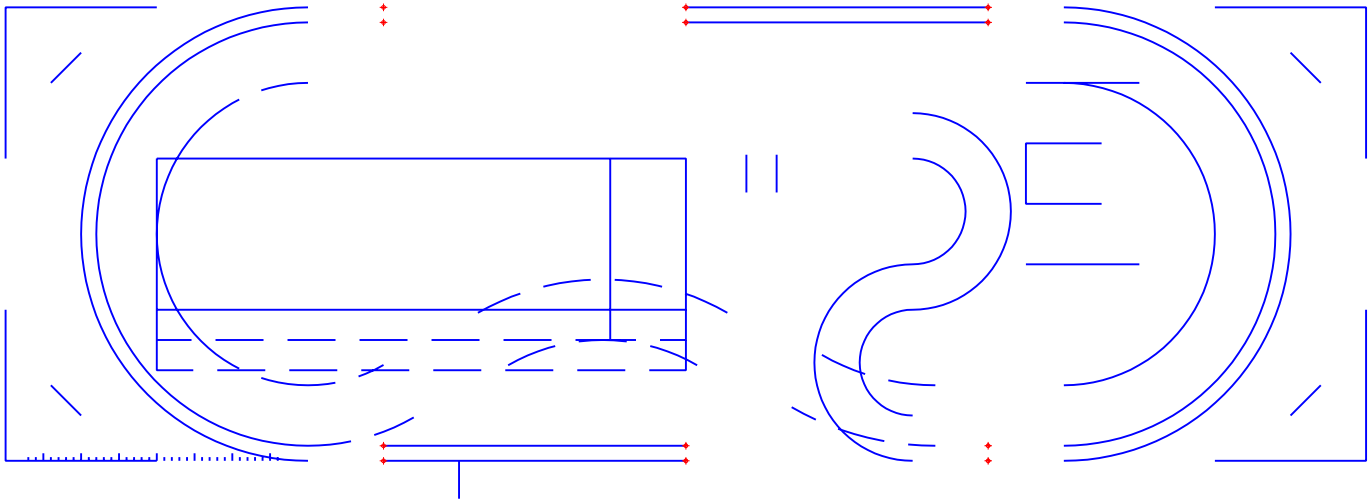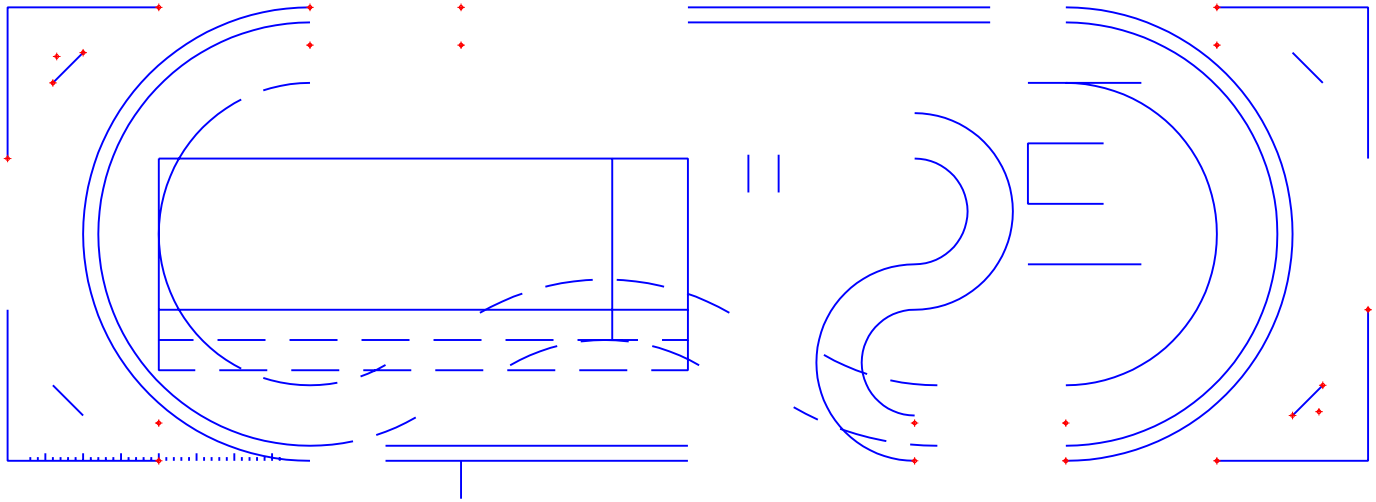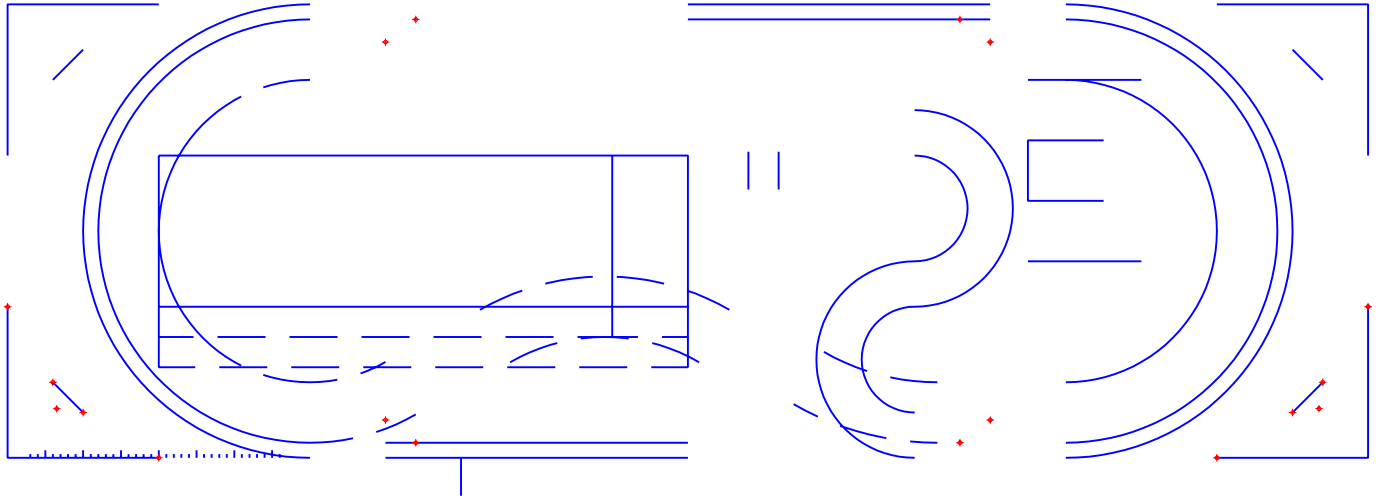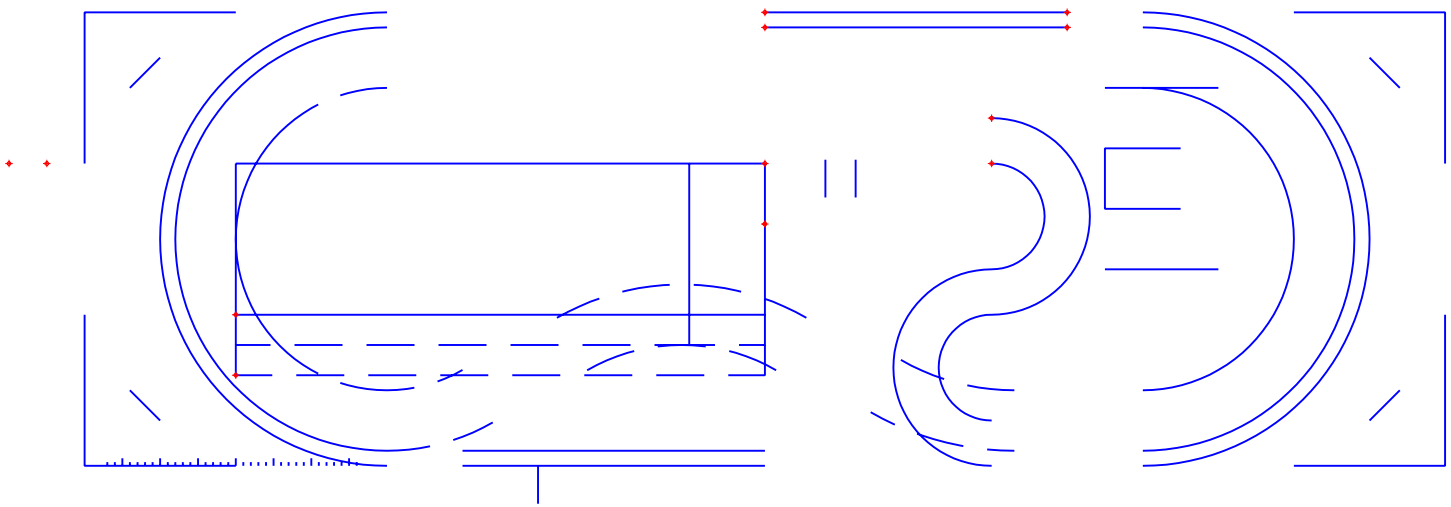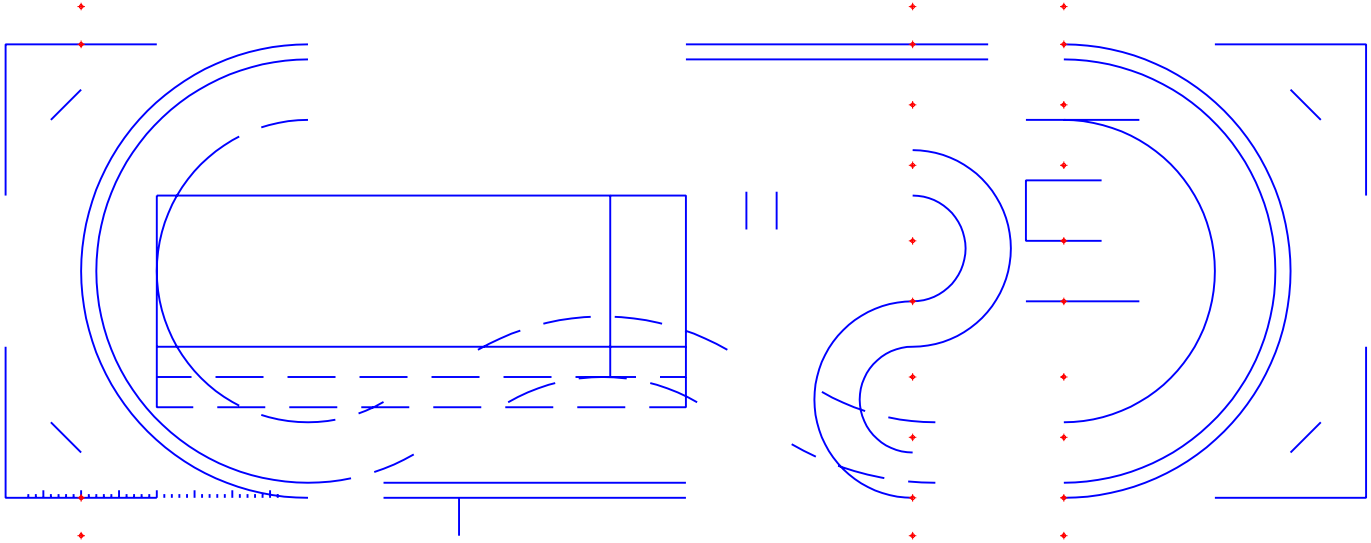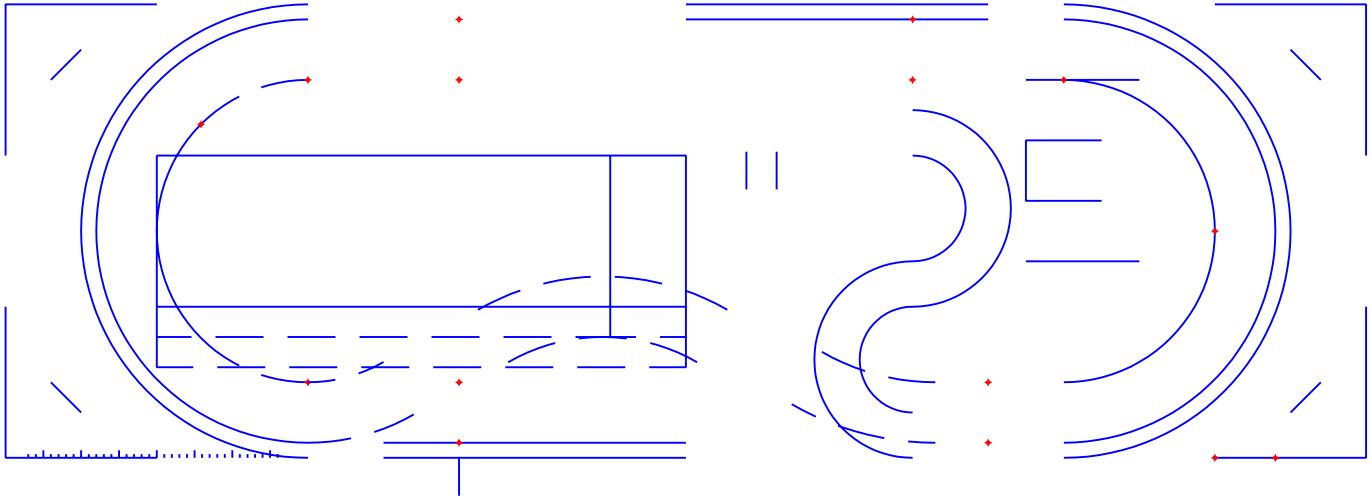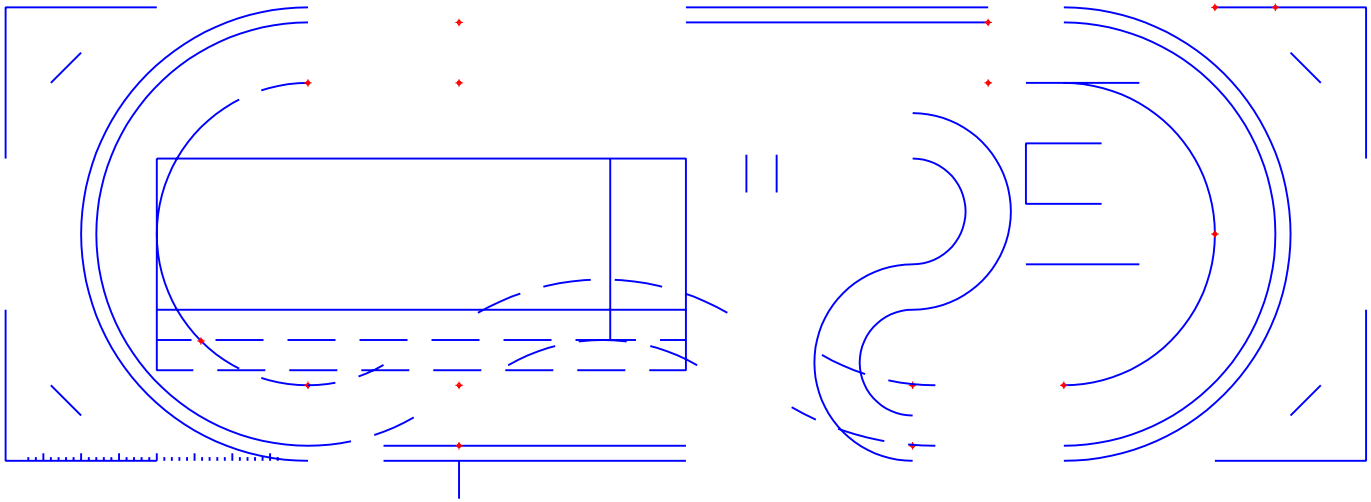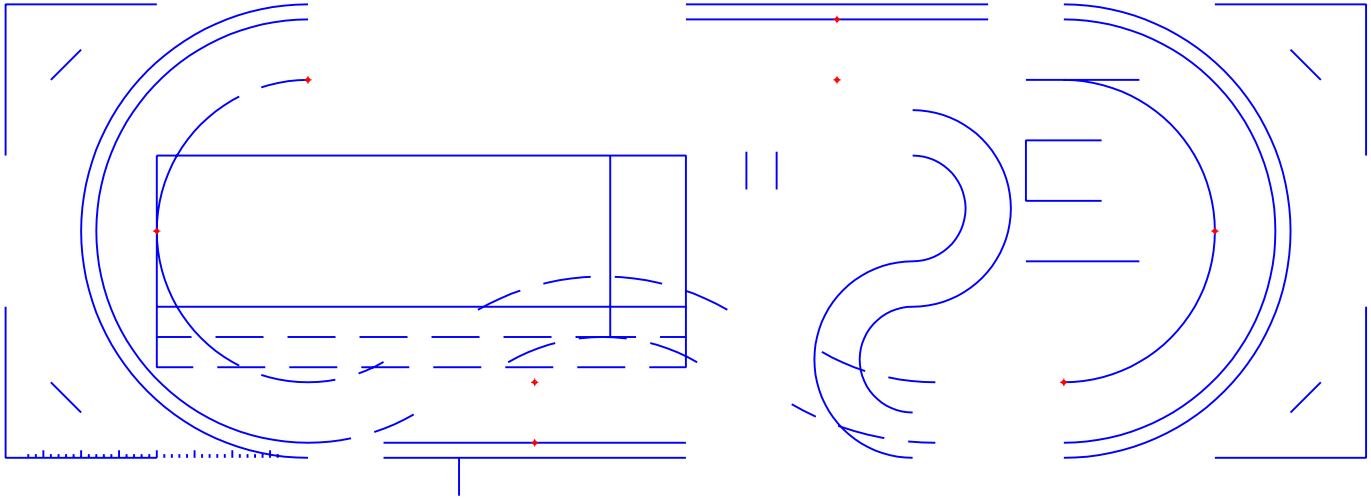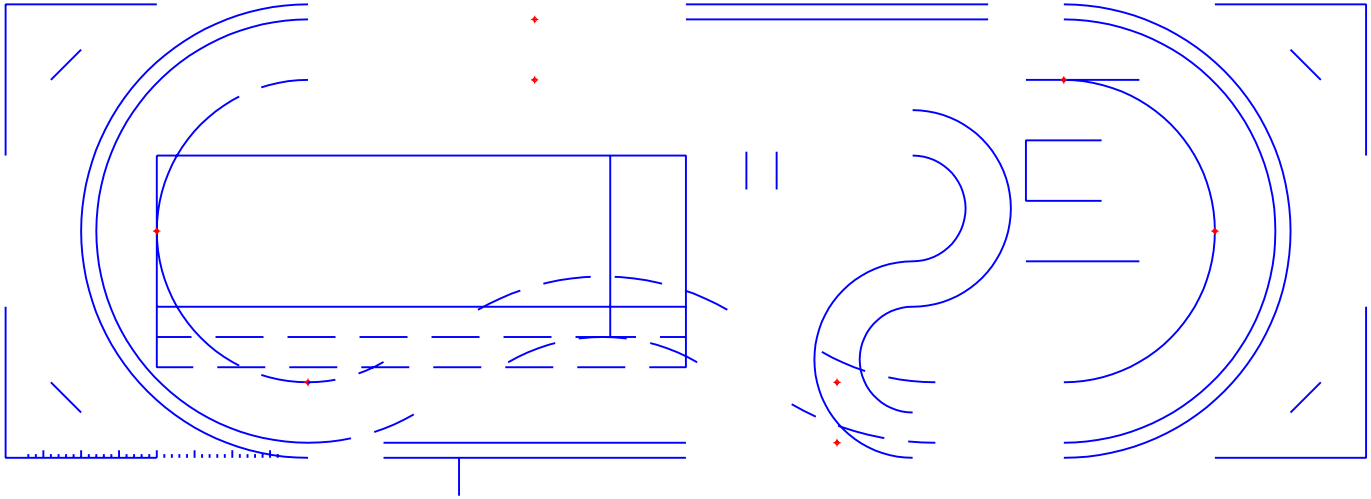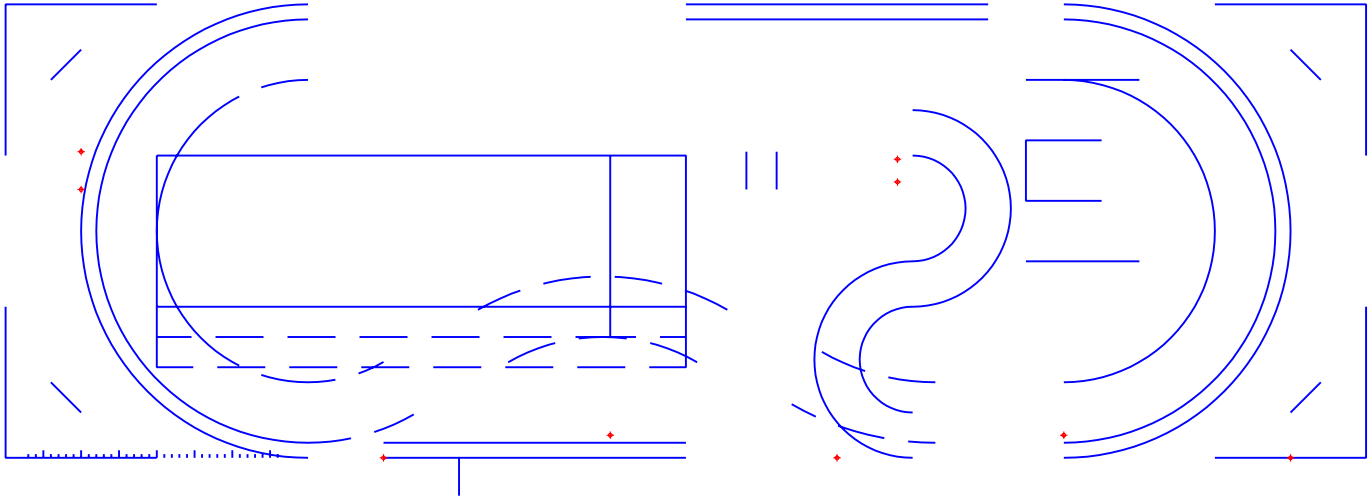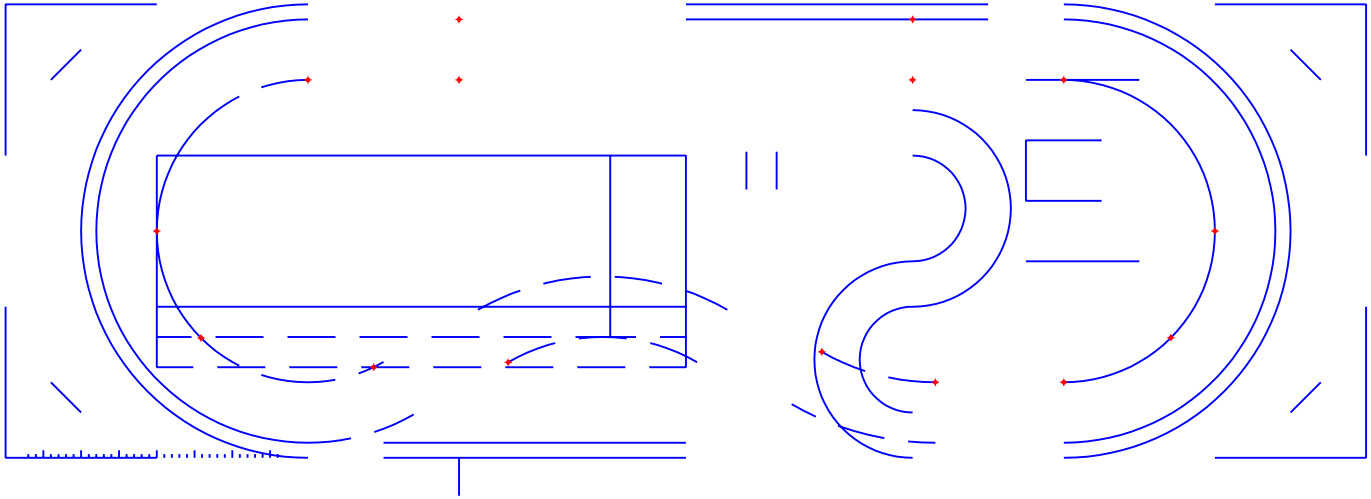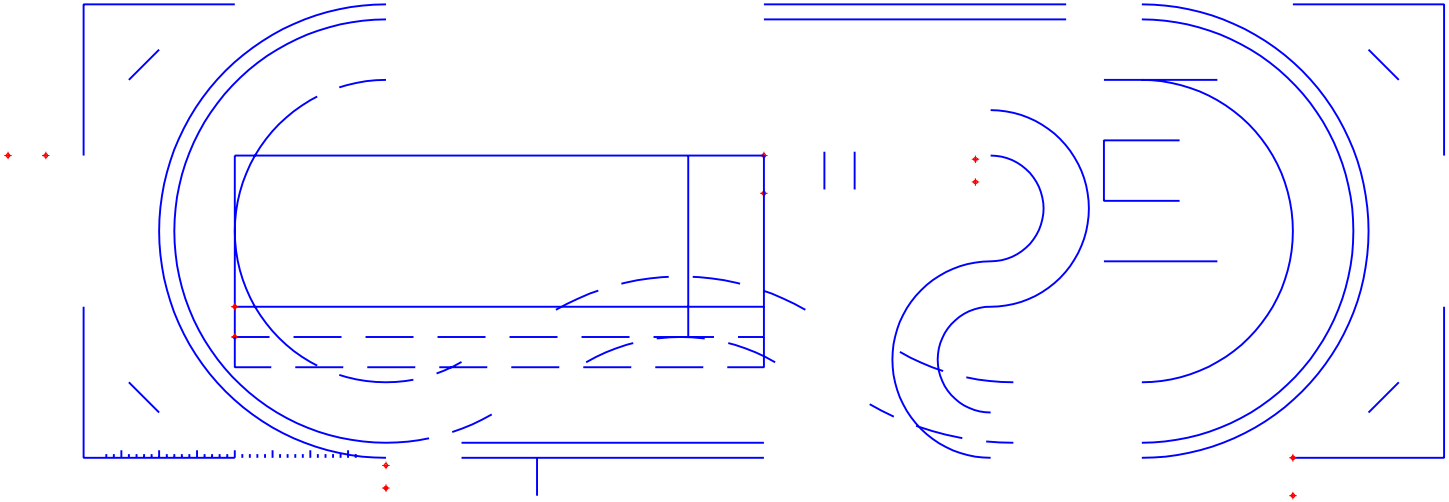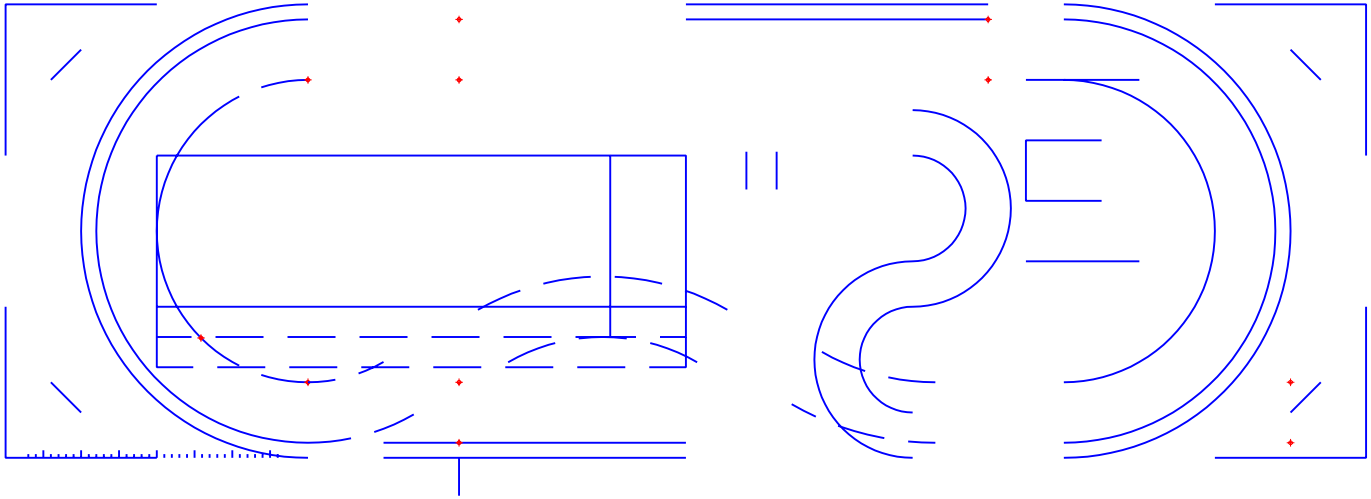
60' x 180' Perimeter - 8 students