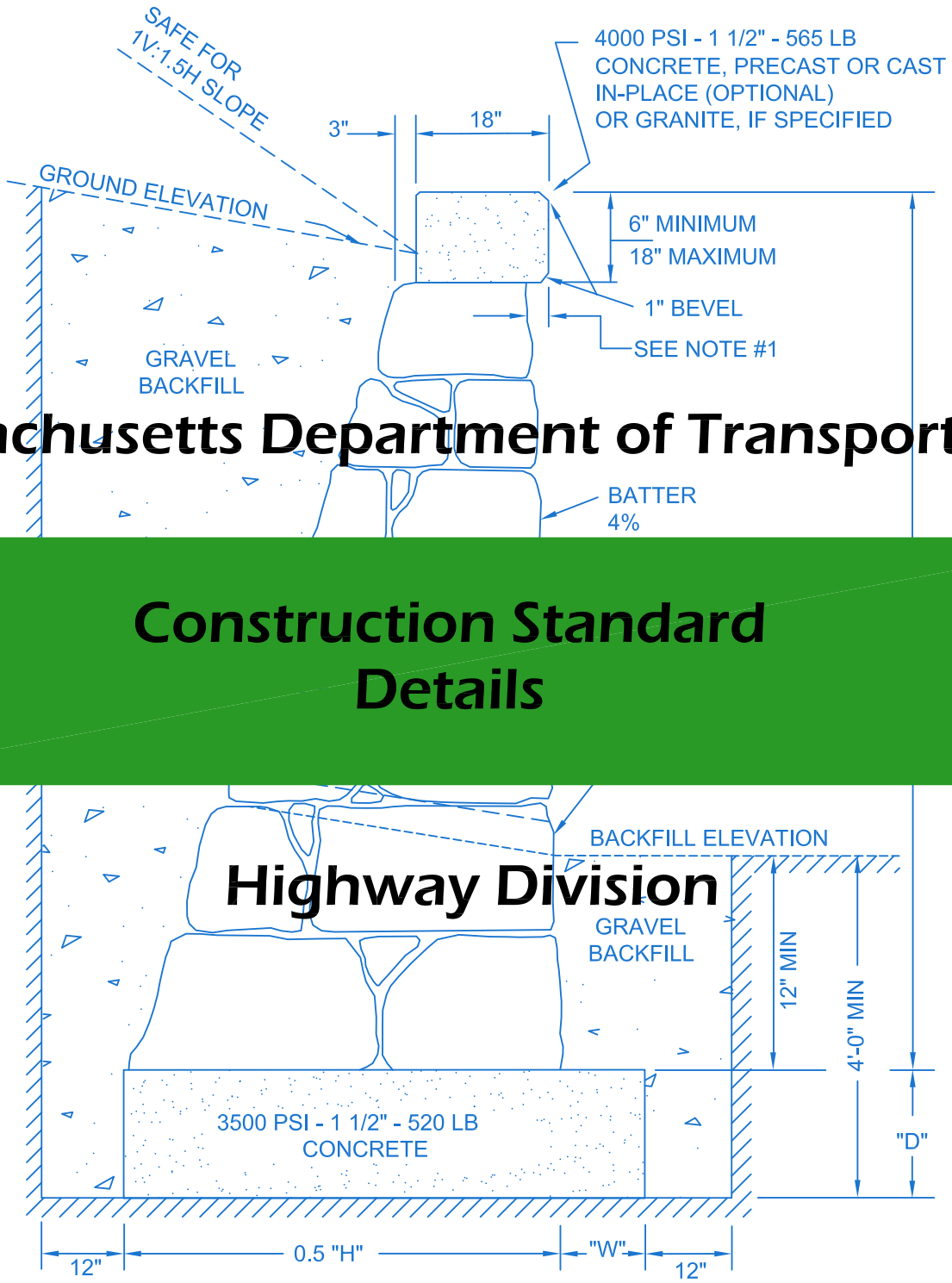

Massachusetts Department of Transportation

Construction Standard Details

Highway Division

massDOT
Massachusetts Department of Transportation
Highway Division

MARCH 2012

The Commonwealth of Massachusetts

Deval L. Patrick
Governor

Timothy P. Murray
Lieutenant Governor

Richard A. Davey
Secretary & CEO

Frank DePaola, P.E.
Administrator

Prepared by
The Massachusetts Department of Transportation- Highway Division

March 2012

EXAMPLE: DRAWING NUMBER - 201.1.0R

2 0 1 . 1 . 0 R

SECTION NUMBER (1,2,3,4 OR 5)
(100, 200, 300, 400 OR 500 SERIES)

- SECTION 1 (100 SERIES)
  - HIGHWAY DESIGN AND PAVEMENT DETAILS
- SECTION 2 (200 SERIES)
  - DRAINAGE
- SECTION 3 (300 SERIES)
  - CEMENT CONCRETE, MASONRY STANDARDS
- SECTION 4 (400 SERIES)
  - HIGHWAY GUARD RAIL AND FENCES
- SECTION 5 (500 SERIES)
  - MISCELLANEOUS

CATEGORY IN SERIES:

- 01 FOR CATCH BASINS
- 02 FOR MANHOLES
- 03 FOR DROP INLETS, ETC.

DRAWING NUMBER IN EACH CATEGORY

AUXILIARY DRAWING NUMBER:
A NUMBER OTHER THAN ZERO WILL APPEAR IN THIS POSITION WHEN IT IS SUBSEQUENTLY NECESSARY TO INSERT ONE OR MORE ADDITIONAL DRAWINGS BETWEEN TWO EXISTING DRAWING NUMBERS IN THE SAME CATEGORY.

REVISED DRAWING

massDOT Massachusetts Department of Transportation Highway Division CONSTRUCTION STANDARDS	KEY TO NUMBERING SYSTEM	DATE OF ISSUE MARCH 2012 DRAWING NUMBER **KEY 1**

DESCRIPTION	DRAWING NUMBER

SECTION 1
HIGHWAY DESIGN AND PAVEMENT DETAILS

LIMIT OF MUCK EXCAVATION..... E 101.1.0
ROCK CUT SELECTION..... E 102.1.0
METHOD OF ROUNDING SLOPES- CUT AND FILL SLOPES..... E 103.1.0
METHOD OF STEPPING SURFACE AND BASE COURSE LAYERS..... E 104.1.0
TRANSVERSE JOINTS AT EXPANSION JOINTS..... E 104.1.1
LOCATION OF SAW CUT FOR TRANSVERSE JOINTS
AT BRIDGE ABUTMENT..... E 104.1.2
SCORED CEMENT CONCRETE PAVEMENT AT RAMPS..... E 105.2.0
SHOULDER SECTION OF SCORED CEMENT CONCRETE PAVEMENT.... E 105.2.1
HOT MIX ASPHALT BERM TYPE A..... E 106.1.0
HOT MIX ASPHALT CURBS..... E 106.2.0
METHOD OF SETTING VERTICAL CURB..... E 106.3.0R
METHOD OF SETTING SLOPED EDGING..... E 106.5.0
INTERSECTIONS..... E 107.1
WHEELCHAIR RAMPS LESS THAN 12'-4" SIDEWALK..... E 107.2.0R
WHEELCHAIR RAMP ON NARROW SIDEWALK WITH
DETECTABLE WARNING PANEL..... E 107.2.1R
WHEELCHAIR RAMPS GREATER THAN 12'-4" SIDEWALK..... E 107.3.0R
WHEELCHAIR RAMP FOR ONE CONTINUOUS DIRECTION
OF PEDESTRIAN TRAFFIC..... E 107.6.0R
WHEELCHAIR RAMP WITH 3" CURB REVEAL..... E 107.6.3R
"T" INTERSECTION WHEELCHAIR RAMP..... E 107.6.4R
DETECTABLE WARNING PANEL FOR WHEELCHAIR RAMPS
AND STANDARD RAMP TERMINOLOGY..... E 107.6.5R
WHEELCHAIR RAMP WITH LANDSCAPING STRIP..... E 107.6.9R
SIDEWALK THROUGH DRIVEWAYS WITHOUT CURB RETURNS 6'..... E 107.7.0
SIDEWALK THROUGH DRIVEWAYS WITH CURB
RETURNS 2' CURB CORNERS..... E 107.8.0
RESIDENTIAL DRIVEWAYS..... E 107.8.1
CURB TRANSITION LENGTH FOR WHEELCHAIR RAMPS..... E 107.9.0

DESCRIPTION	DRAWING NUMBER

SECTION 2
DRAINAGE

CONCRETE BLOCK CATCH BASIN..... E 201.3.0R
PRECAST CONCRETE CATCH BASIN..... E 201.4.0
PRECAST CONCRETE CATCH BASIN TUB..... E 201.5.0
CATCH BASIN FRAME..... E 201.6.0
HOOK LOCK CASCADE GRATE- FLOW FROM LEFT..... E 201.7.0
HOOK LOCK CASCADE GRATE- FLOW FROM RIGHT..... E 201.7.1
FRAME AND HOOK LOCK CASCADE GRATE- FLOW FROM LEFT-
ASSEMBLY DETAILS..... E 201.9.0
FRAME AND HOOK LOCK CASCADE GRATE- FLOW FROM RIGHT-
ASSEMBLY DETAILS..... E 201.9.1
HOOK LOCK BAR GRATE..... E 201.10.0
FRAME AND HOOK LOCK BAR GRATE- FRAME ASSEMBLY DETAILS..... E 201.10.1
DROP INLET GRATE..... E 201.11.0
CATCH BASIN HOOD..... E 201.12.0
CONCRETE BLOCK MANHOLE - MANHOLES 9' OR LESS IN DEPTH..... E 202.2.0
CONCRETE BLOCK MANHOLE - MANHOLES OVER 9' IN DEPTH..... E 202.3.0
PRECAST CONCRETE MANHOLES 9' OR LESS IN DEPTH..... E 202.4.0
SPECIAL MANHOLES FOR 36” TO 84” DIAMETER R.C. PIPE..... E 202.5.0
MANHOLE FRAME AND COVER - A FRAME..... E 202.6.0R
MANHOLE FRAME AND COVER - B FRAME..... E 202.7.0
MANHOLE COVER DETAILS..... E 202.8.0
CONCRETE COLLARS..... E 202.9.0
DROP INLETS TYPE A- PRECAST CONCRETE TYPE B
CONCRETE BLOCK..... E 203.1.0
DROP INLETS TYPE AF- PRECAST CONCRETE TYPE BF-
CONCRETE BLOCK..... E 203.2.0
DROP INLET TYPE C..... E 203.3.0
DROP INLET TYPE CF..... E 203.4.0
DROP INLET TYPE D..... E 203.5.0
DROP INLET TYPE DF..... E 203.6.0
FLUSH DROP INLET THROAT..... E 203.7.0
GUTTER INLET..... E 204.2.0
DRY STONE MASONRY LEACHING BASIN..... E 205.1.0
CONCRETE BLOCK LEACHING BASIN..... E 205.2.0
CORRUGATED STEEL METAL PIPE - TABLE OF
MINIMUM WALL THICKNESS..... E 206.1.0

DESCRIPTION	DRAWING NUMBER

SECTION 2
DRAINAGE CONT.

CORRUGATED STEEL METAL PIPE ARCH - TABLE OF MINIMUM WALL THICKNESS..... E 206.2.0
CORRUGATED METAL PIPE UNDER FILL SLOPE..... E 206.3.0
CONCRETE AND FIELD STONE MASONRY PIPE ENDS FOR 8" TO 30" PIPE..... E 206.4.0
QUANTITY TABLES FOR CONCRETE AND FIELD STONE MASONRY PIPE ENDS..... E 206.4.1
CONCRETE AND FIELDSTONE MASONRY PIPE ENDS FOR COMBINATION PIPES UP TO 30"..... E 206.5.0
CONCRETE AND FIELDSTONE MASONRY PIPE ENDS FOR 30" TO 84" PIPE CULVERTS..... E 206.6.0
STONE PIPE ENDS FOR PIPES 24" AND LESS IN DIA. ..... E 206.7.0
REINFORCED CONCRETE PIPE FLARED ENDS..... E 206.8.0
STANDARD METAL END..... E 206.9.0
CONCRETE SPLASH PADS..... E 208.1.0
SUBDRAIN..... E 209.1.0
DITCH CHECK DAMS FOR EROSION CONTROL..... E 210.2.0
HAY BALES AND SILT FENCES FOR EROSION CONTROL..... E 210.3.0
HALF CIRCLE CCM PIPE WATERWAYS..... E 211.1.0
PAVED WATERWAYS AND APRON..... E 211.2.0
PAVED WATERWAYS..... E 211.3.0

SECTION 3
CEMENT CONCRETE & MASONRY STRUCTURES

CEMENTED STONE MASONRY WALL..... E 302.2.0
SPECIAL SLOPE PAVING UNDER BRIDGES REINFORCED CONCRETE SLAB..... E 303.1.0
SPECIAL SLOPE PAVING UNDER BRIDGES REINFORCED CONCRETE SLAB DETAILS..... E 303.1.1
CEMENT CONCRETE STEPS 1/2..... E 304.1.0
CEMENT CONCRETE STEPS 2/2..... E 304.2.0
TYPICAL CANTILEVER RETAINING WALL SECTION..... E 305.1.0
CANTILEVER RETAINING WALLS DENSE FOUNDATION SOILS, SLOPING BACKFILL..... E 305.2.0
CANTILEVER RETAINING WALLS DENSE FOUNDATION SOILS, LEVEL BACKFILL, SURCHARGE..... E 305.3.0

DESCRIPTION	DRAWING NUMBER

SECTION 3
CEMENT CONCRETE & MASONRY STRUCTURES CONT.

CANTILEVER RETAINING WALLS LOOSE FOUNDATION SOILS, SLOPING BACKFILL..... E 305.4.0
CANTILEVER RETAINING WALLS LOOSE FOUNDATION SOILS, LEVEL BACKFILL, SURCHARGE..... E 305.5.0
CANTILEVER RETAINING WALLS ROCK FOUNDATION, SLOPING BACKFILL..... E 305.6.0
CANTILEVER RETAINING WALLS ROCK FOUNDATION, LEVEL BACKFILL, SURCHARGE..... E 305.7.0

SECTION 4
HIGHWAY GUARD RAIL & FENCES

STEEL W BEAM HIGHWAY GUARD ..... E 401.1.0
STEEL W BEAM HIGHWAY GUARD SECTIONS..... E 401.1.1
STEEL W BEAM HIGHWAY GUARD FOR SIGN PROTECTION..... E 401.2.0R
STEEL W BEAM HIGHWAY GUARD BURIED IN BACK-SLOPE PLAN VIEW..... E 401.2.1A
STEEL W BEAM HIGHWAY GUARD BURIED IN BACK-SLOPE POST LOCATION..... E 401.2.1B
STEEL W BEAM HIGHWAY GUARD BURIED IN BACK-SLOPE POST LOCATION..... E 401.2.1C
STEEL W BEAM HIGHWAY GUARD BURIED IN BACK-SLOPE ANCHORAGE DETAILS..... E 401.2.1D
STEEL W BEAM HIGHWAY GUARD BURIED IN BACK-SLOPE END ANCHORAGE DETAILS FOR POSTS 1, 2 AND 3..... E 401.2.1E
TABLE OF OFFSETS FOR HIGHWAY GUARD FLARED ENDS..... E 401.3.0
STEEL THRIE BEAM HIGHWAY GUARD RAIL DETAILS..... E 401.5.0
BRIDGE RAIL TO HIGHWAY GUARD TRANSITION..... E 401.5.1R
BRIDGE RAIL TO HIGHWAY GUARD TRANSITION SECTIONS..... E 401.5.2
STEEL THRIE BEAM HIGHWAY TERMINAL CONNECTOR ..... E 401.5.3
BRIDGE RAIL TO HIGHWAY GUARD COLLAPSING TUBE ..... E 401.5.4
BRIDGE RAIL TO HIGHWAY GUARD AT SIDEWALK ..... E 401.5.5
BRIDGE RAIL TO HIGHWAY GUARD AT SIDEWALK SECTIONS..... E 401.5.6
STEEL THRIE BEAM HIGHWAY GUARD DETAILS..... E 401.6.0R
STEEL HIGHWAY GUARD TRANSITION BEAM ..... E 401.6.1
STEEL W BEAM HIGHWAY GUARD RAIL DETAILS ..... E 401.7.0
STEEL W BEAM HIGHWAY GUARD POSTS AND TERMINAL SECTION DETAILS..... E 401.8.0R

DESCRIPTION	DRAWING NUMBER

SECTION 4
HIGHWAY GUARD RAIL & FENCES CONT.

STEEL BEAM HIGHWAY GUARD WITH WOOD POST..... E 401.10.0
SPECIAL BASE ANCHOR FOR HIGHWAY GUARD
INSTALLATION ON CONCRETE..... E 401.11.0R
MODIFIED HIGHWAY GUARD POST INSTALLATION WHERE
STANDARD EMBEDMENT IS NOT FEASIBLE ..... E 401.12.0
STEEL THRIE BEAM HIGHWAY GUARD MEDIAN - BARRIER..... E 401.16.0R
OFFSET BLOCKS FOR STEEL W BEAM HIGHWAY GUARD..... E 401.20.0
OFFSET BLOCKS FOR STEEL THRIE BEAM HIGHWAY GUARD ..... E 401.21.0
STEEL W BEAM HIGHWAY GUARD TERMINAL CONNECTORS ON EXIST.
BRIDGE W-RAIL LEADING END AT ABUTMENTS & END POSTS..... E 402.2.0
INSTALLATION OF STEEL W BEAM HIGHWAY GUARD (TRAILING END)
AT EXISTING BRIDGE ABUTMENTS AND END POSTS (W-RAIL)..... E 402.3.0
MASONRY BRACKET FOR STEEL W BEAM HIGHWAY GUARD ON
ABUTMENTS AND END POSTS (TRAILING END)..... E 402.4.0
MASONRY BRACKET FOR STEEL W BEAM HIGHWAY GUARD ON
ABUTMENTS AND END POSTS (TRAILING END)..... E 402.5.0
STEEL THRIE BEAM HIGHWAY GUARD TERMINAL CONNECTORS ON
AN EXIST. BRIDGE LEADING END AT ABUTMENTS & END POST..... E 402.7.0
STEEL THRIE BEAM HIGHWAY GUARD (TRAILING END) AT EXISTING
BRIDGE ABUTMENTS AND END POSTS..... E 402.8.0
MASONRY BRACKET FOR STEEL THRIE BEAM HIGHWAY GUARD ON
ABUTMENTS AND END POSTS (TRAILING END)..... E 402.9.0
GUARDRAIL RETROFIT ON BRIDGES (PLAN VIEW)..... E 402.9.1
GUARDRAIL RETROFIT ON BRIDGES (DETAILS)..... E 402.9.2
GUARDRAIL RETROFIT ON BRIDGES (NOTES) ..... E 402.9.3
F SHAPE CONCRETE BARRIER..... E 402.10.0
F SHAPE CONCRETE BARRIER SYMMETRICAL SECTION
REINFORCING DETAILS..... E 402.11.0
F SHAPE CONCRETE BARRIER ASYMMETRICAL SECTION
REINFORCING DETAILS..... E 402.12.0
F SHAPE CONCRETE BARRIER DOWEL DETAILS..... E 402.13.0
F SHAPE CONCRETE BARRIER WITH CONCRETE SEPARATOR..... E 402.20.0
F SHAPE CONCRETE BARRIER WITH CONCRETE SEPARATOR
REINFORCING DETAILS..... E 402.21.0
F SHAPE CONCRETE BARRIER WITH CONCRETE SEPARATOR
DOWEL DETAILS..... E 402.22.0

DESCRIPTION	DRAWING NUMBER

SECTION 4
HIGHWAY GUARD RAIL & FENCES CONT.

PRECAST PORTABLE CONCRETE BARRIER 1/3..... E 403.1.0
PRECAST PORTABLE CONCRETE BARRIER 2/3..... E 403.2.0
PRECAST PORTABLE CONCRETE BARRIER 3/3..... E 403.3.0
CHAIN LINK FENCE (SPRING TENSION WIRE) ..... E 404.1.0
CHAIN LINK FENCE (SPRING TENSION WIRE) ..... E 404.2.0
CHAIN LINK FENCE (PIPE TOP RAIL) ..... E 404.4.0
CHAIN LINK FENCE DETAILS OF CABLE ATTACHMENTS
& POST BASES..... E 404.5.0
CHAIN LINK FENCE - SWING GATE..... E 404.6.0
CHAIN LINK FENCE CANTILEVER GATE ..... E 404.7.0
CHAIN LINK FENCE MOUNTED ON GUARD RAIL..... E 404.8.0
CHAIN LINK FENCE POST DETAILS ..... E 404.10.0

SECTION 5
MISCELLANEOUS

WETLANDS PROTECTION ACT SIGN..... E 501.1.0
TREE WELLS..... E 502.1.0
SETTING RURAL MAILBOXES..... E 504.1.0
DEMOUNTABLE REFLECTORIZED STATION MARKER AND
PROJECT MARKER..... E 505.1.0
BOUND LETTERED GRANITE ..... E 506.2.0

massDOT
Massachusetts Department of Transportation
Highway Division

CONSTRUCTION STANDARDS

LIMIT OF MUCK EXCAVATION

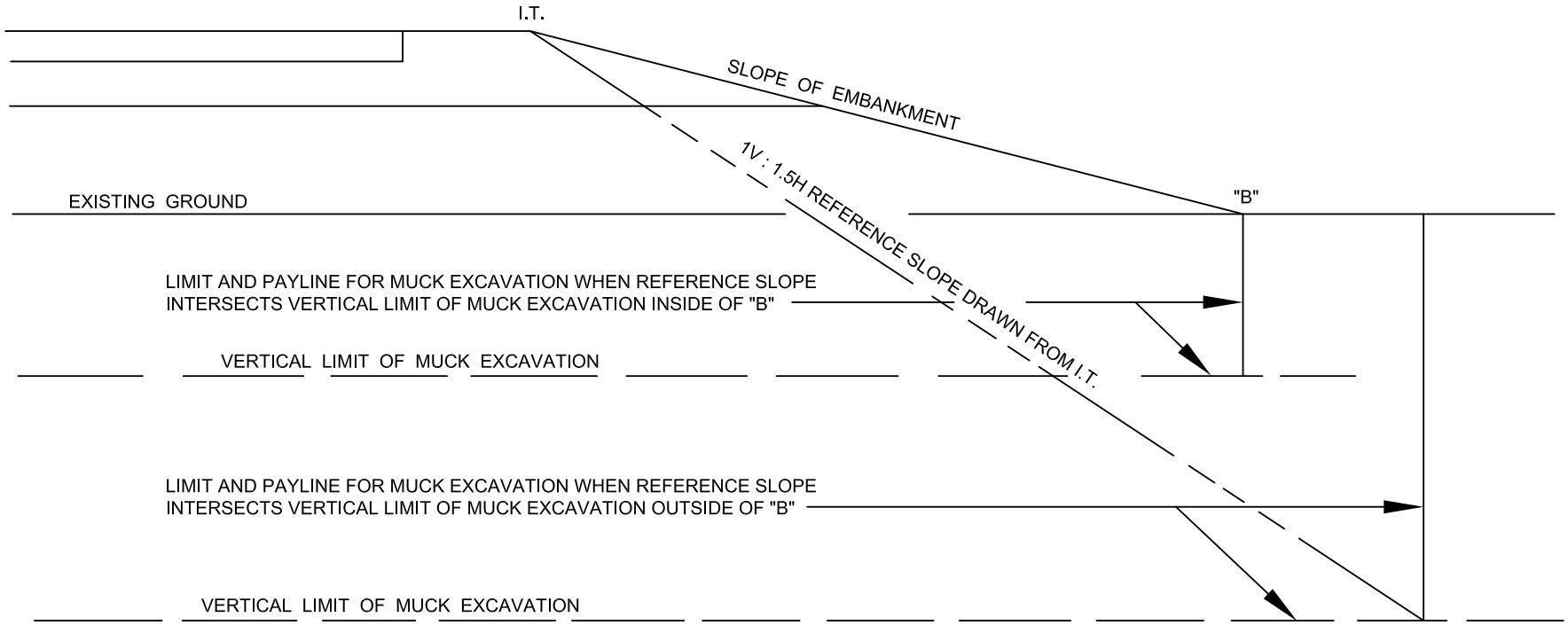

NOTES:

1. "B" - INTERSECTION OF EXISTING GROUND AND SLOPE OF EMBANKMENT
2. THE ABOVE METHOD MAY ALSO BE USED TO DETERMINE THE LIMIT FOR EXCAVATION OF OTHER UNSUITABLE MATERIALS
3. I.T. - INTERSECTION OF TANGENT

DATE OF ISSUE
MARCH 2012

DRAWING NUMBER
E 101.1.0

massDOT
Massachusetts Department of Transportation
Highway Division

CONSTRUCTION STANDARDS

ROCK CUT SELECTION

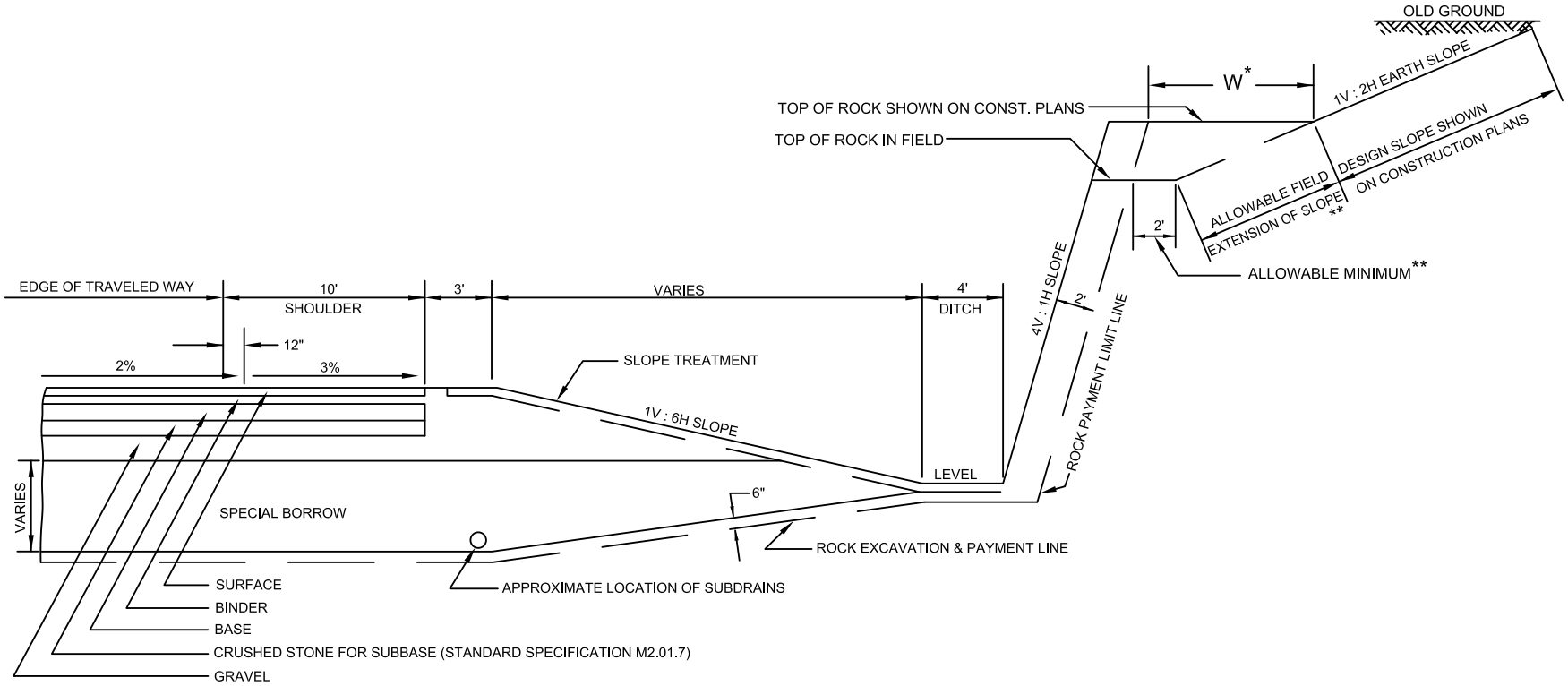

* DESIGN
- W=12' FOR ROCK CUTS OF 20' OR LESS
- W=17' FOR ROCK CUTS 25' OR MORE
- W-VARIES 12' - 17' FOR ROCK CUTS BETWEEN 20' - 25'; DETERMINE PROPORTIONATELY

** THE EXTENSION OF THE DESIGN SLOPE IN THE FIELD IS PERMISSIBLE WITHIN THE LIMITS SHOWN (2' SHELF ON TOP OF THE ROCK), WHEN THE HEIGHT OF THE ROCK CUT IN THE FIELD IS LESS THAN THAT SHOWN ON THE CONSTRUCTION PLANS

NOTES:

1. ONLY ROCK ACTUALLY REMOVED IS PAYABLE. NO PAYMENT WILL BE MADE BEYOND THE ROCK PAYMENT LINE

DATE OF ISSUE
MARCH 2012

DRAWING NUMBER
E 102.1.0

METHOD OF ROUNDING CUT SLOPES

ROUNDING TABLE FOR 1V : 2H SLOPE

D FEET	A	B
3 <	1'	2'
>3 TO 20	$\frac{D}{3}$	$\frac{2}{3}D$
> 20	7'	14'

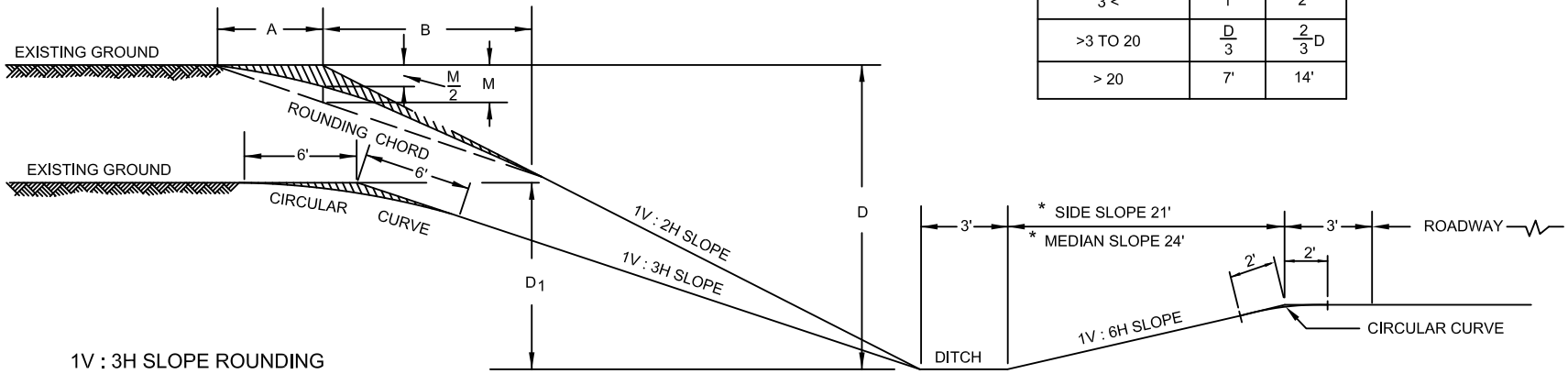

1V : 3H SLOPE ROUNDING

1. WHEN "D1" IS 2' OR MORE ROUND AS SHOWN IN TABLE ABOVE.
2. WHEN "D1" IS LESS THAN 2' ROUND FULL LENGTH OF SLOPE.

METHOD OF ROUNDING FILL SLOPES

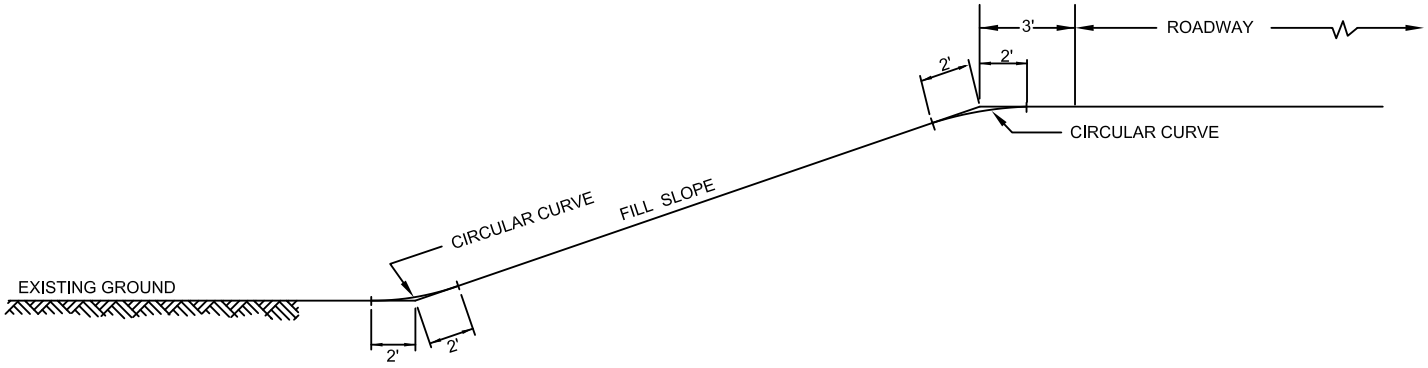

* USE SLOPE LENGTHS FOR LIMITED ACCESS OR HIGH SPEED ROADWAYS.

NOTE:

1. THE DIMENSIONS SHOWN FOR ROUNDING CUT AND FILL SLOPES ARE APPROXIMATE; THEY ARE TO BE USED AS GUIDES.

massDOT Massachusetts Department of Transportation Highway Division

CONSTRUCTION STANDARDS

METHOD OF ROUNDING SLOPES

CUT AND FILL SLOPES

DATE OF ISSUE MARCH 2012

DRAWING NUMBER E 103.1.0

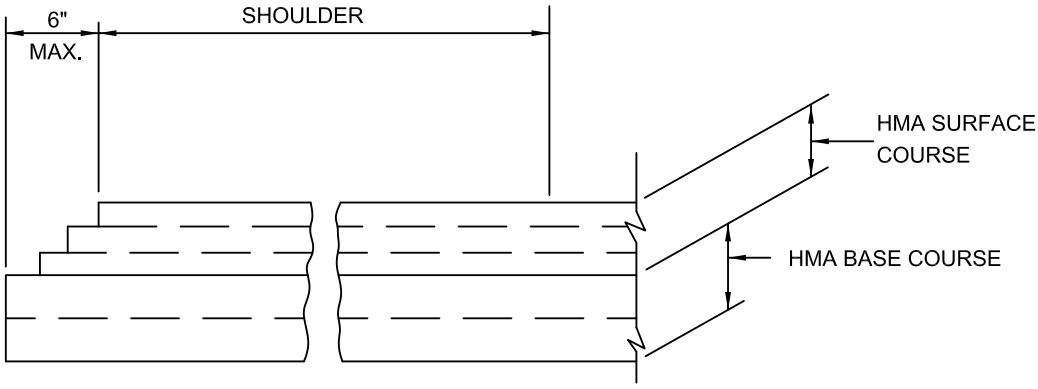

3 - LAYERED SURFACE AND 2 - LAYERED BASE COURSE

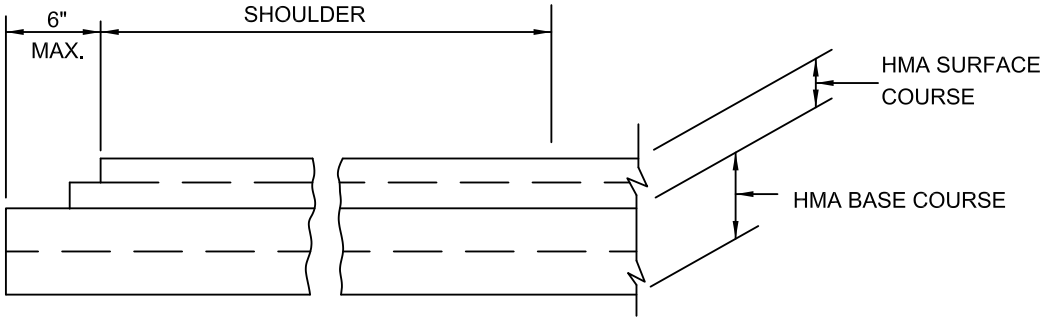

2 - LAYERED SURFACE AND 2 - LAYERED BASE COURSE

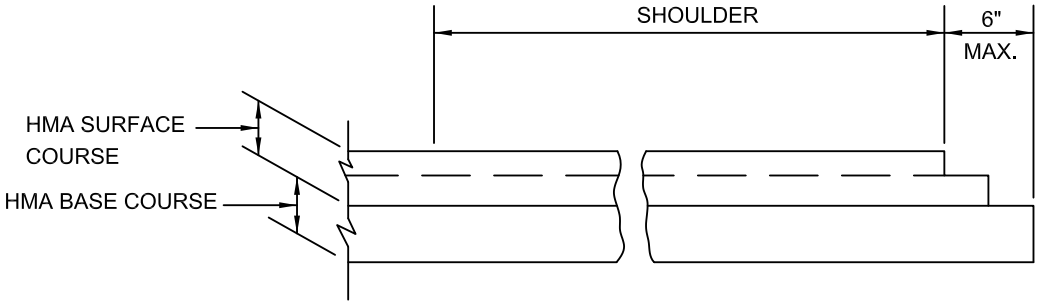

2 - LAYERED SURFACE AND 1 - LAYER BASE COURSE

NOTES:

1. ONLY APPLICABLE STEPPING METHODS OF THIS DRAWING ARE TO BE SHOWN IN THE TYPICAL SECTION OF THE CONSTRUCTION PLANS. THIS SHALL BE SHOWN AS A SEPARATE DETAIL AND NOT INCLUDED ON EACH SECTION.
2. STEPPING SHALL NOT BE SHOWN ON THE CROSS SECTION TEMPLATES.
3. ADDITIONAL MATERIAL REQUIRED FOR STEPPING SHALL BE INCLUDED IN ESTIMATED QUANTITIES.

massDOT Massachusetts Department of Transportation Highway Division
CONSTRUCTION STANDARDS

METHOD OF STEPPING SURFACE AND BASE COURSE LAYERS

DATE OF ISSUE
MARCH 2012

DRAWING NUMBER
E 104.1.0

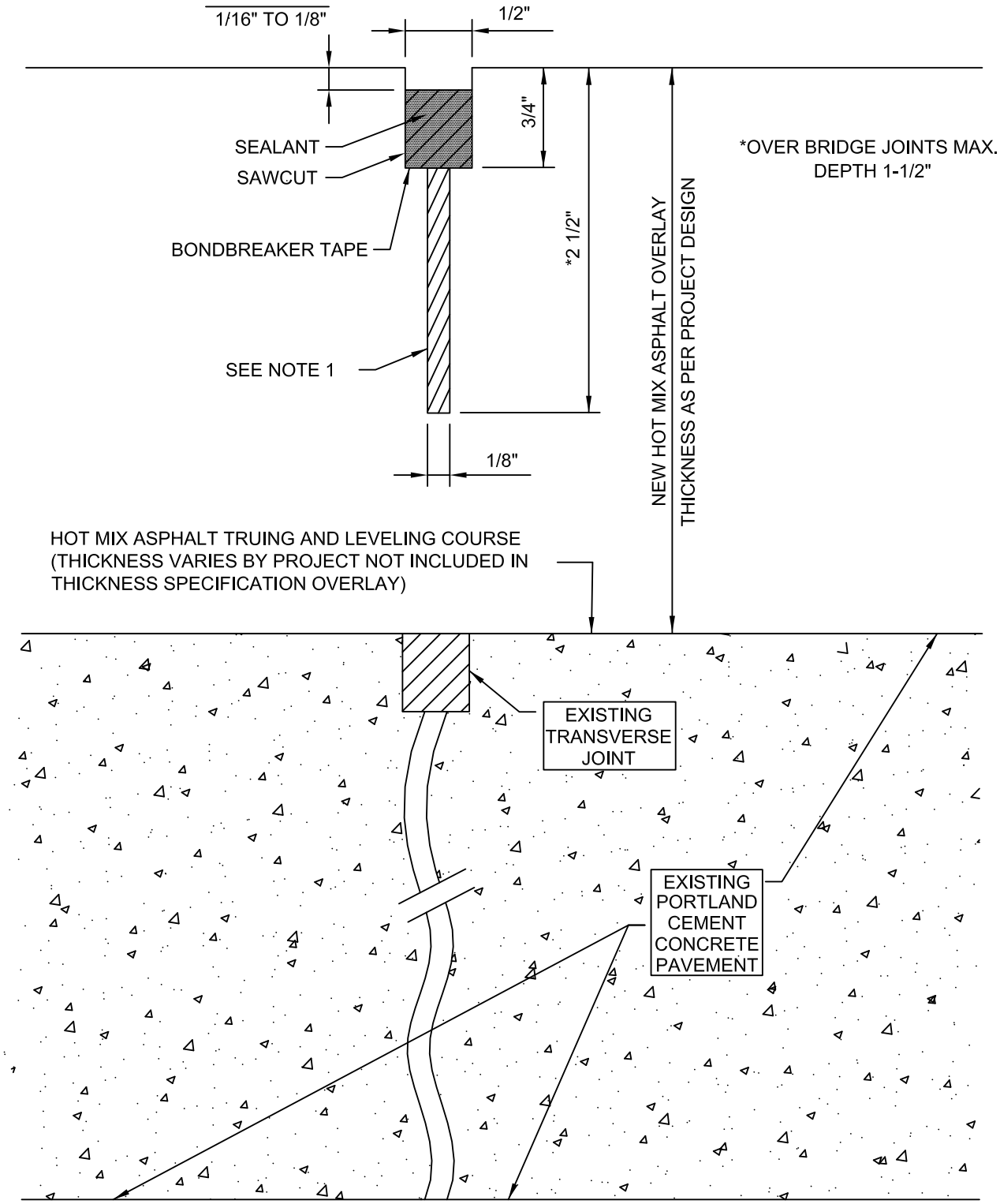

NOTES:

1. WHEN THE TOTAL THICKNESS OF HOT MIX ASPHALT OVER THE EXISTING JOINT EXCEEDS 4-3/8", A 1/8" SAWCUT SHALL BE INCLUDED IN THE JOINT AS SHOWN TO A MINIMUM DEPTH OF 2-1/2".
2. PRIOR TO PLACING THE OVERLAY, ALL JOINTS SHALL BE LOCATED AND REFERENCED.

massDOT Massachusetts Department of Transportation Highway Division

CONSTRUCTION STANDARDS

TRANSVERSE JOINTS AT EXPANSION JOINTS

DATE OF ISSUE
MARCH 2012

DRAWING NUMBER
E 104.1.1

massDOT
Massachusetts Department of Transportation
Highway Division

CONSTRUCTION STANDARDS

LOCATION OF SAW CUT FOR TRANSVERSE JOINTS AT BRIDGE ABUTMENT

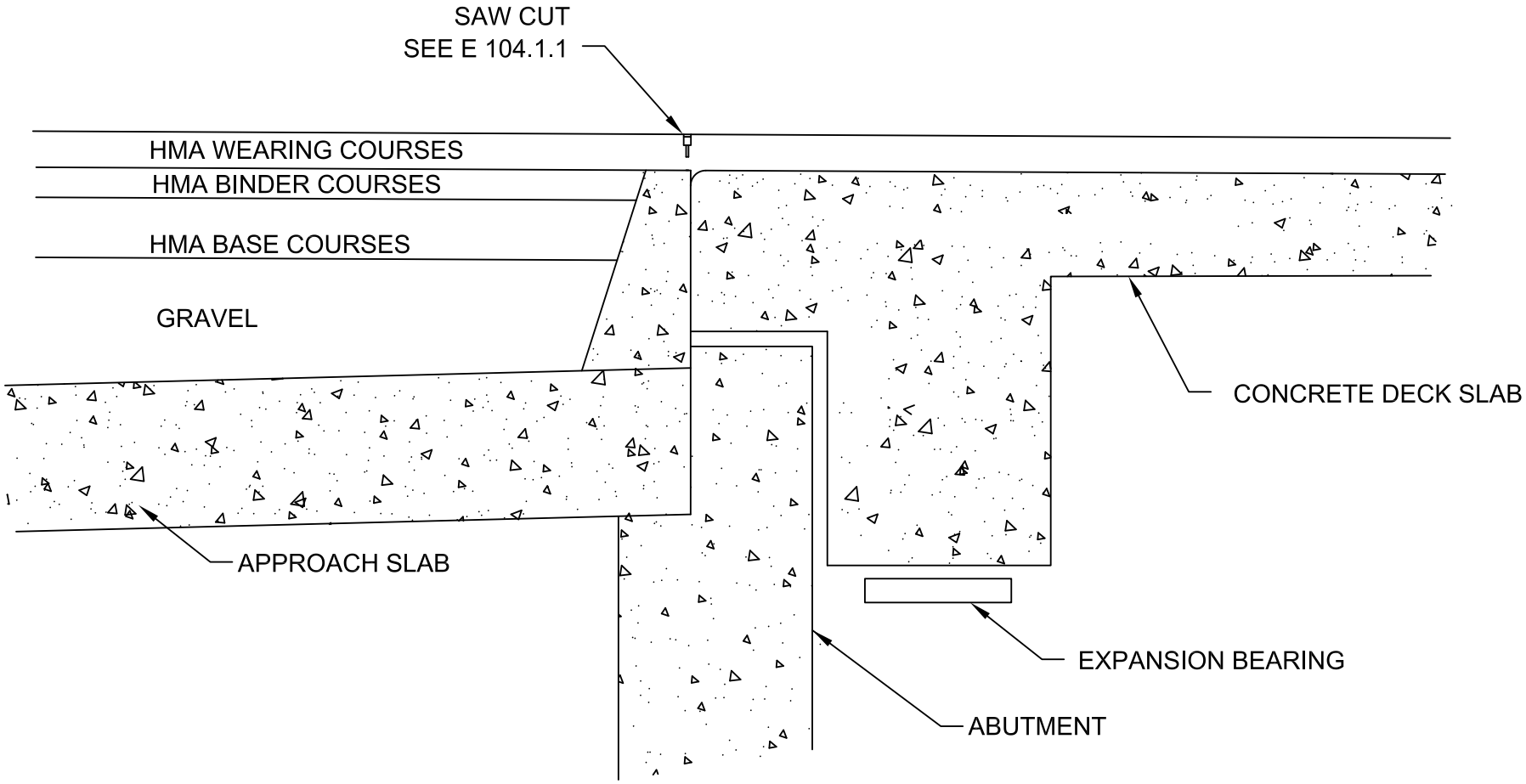

NOTES:

1. BEFORE SAW-CUTTING THE TRANSVERSE JOINT THE CONTRACTOR SHALL LOCATE THE END OF THE BRIDGE DECK. SAW-CUTTING MUST TAKE INTO ACCOUNT THE SKEW ANGLE OF THE BRIDGE.
2. ONLY EXPANSION JOINTS SHALL BE SAW-CUT AND SEALED.
3. ONLY REQUIRED WITH A CONTINUOUS BITUMINOUS CONCRETE SURFACE FROM ROADWAY TO BRIDGE.

DATE OF ISSUE
MARCH 2012

DRAWING NUMBER
E 104.1.2

massDOT
Massachusetts Department of Transportation
Highway Division

CONSTRUCTION STANDARDS

SCORED CEMENT CONCRETE PAVEMENT AT RAMPS

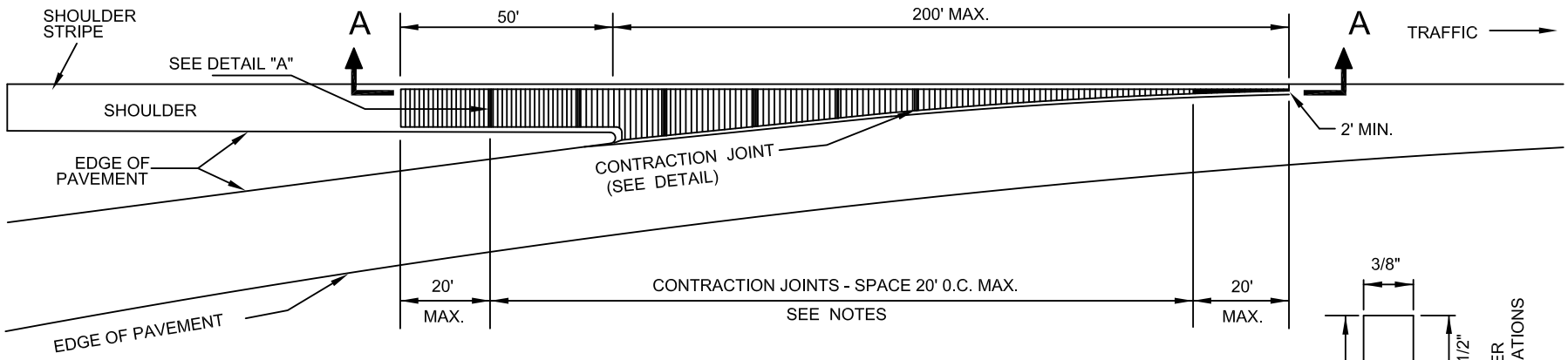

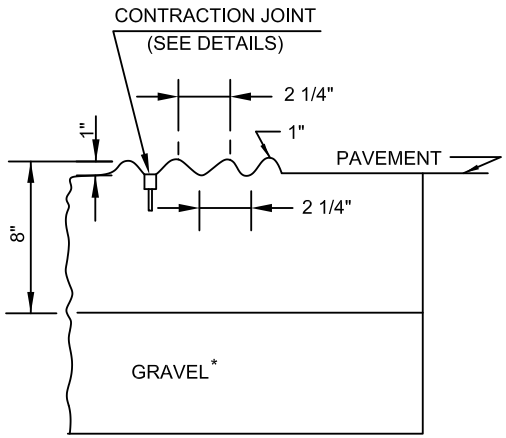

DETAIL OF CORRUGATIONS

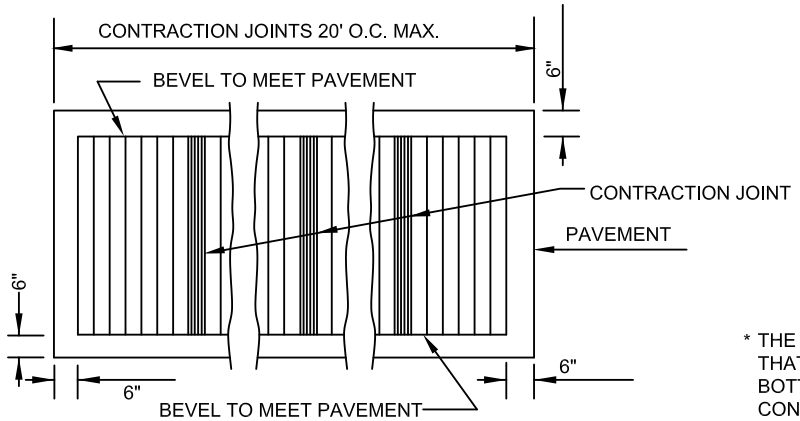

DETAIL "A"

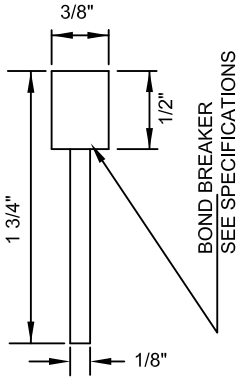

CONTRACTION JOINT DETAIL

* THE DEPTH OF THE GRAVEL IS TO BE SUCH THAT ITS BOTTOM LINE MEETS THE BOTTOM OF THE GRAVEL LINE OF THE CONTIGUOUS PAVEMENT.

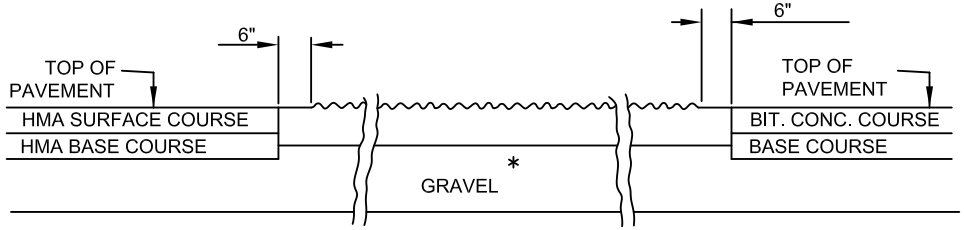

SECTION A - A

NOTES:

1. CONTRACTION JOINTS ARE TO BE SPACED AT A MAXIMUM OF 20' APART.
2. THE JOINTS ARE TO BE SAWED AND LOCATED IN THE DEPRESSIONS OF THE CORRUGATIONS, SEE DETAIL OF CORRUGATIONS.
3. END OF CORRUGATED RIDGES TO BE BEVELED.
4. FOR DESCRIPTON OF MATERIAL AND CONSTRUCTION METHODS SEE STANDARD SPECIFICATIONS AND SPECIAL PROVISIONS.
5. SCORED CEMENT CONCRETE TO BE: 5000 psi-3/4"-705 lb/Cu.Yd.
6. TROUGH FLUSH WITH OR ABOVE ADJACENT PAVEMENT FOR DRAINAGE.

DATE OF ISSUE
MARCH 2012

DRAWING NUMBER
E 105.2.0

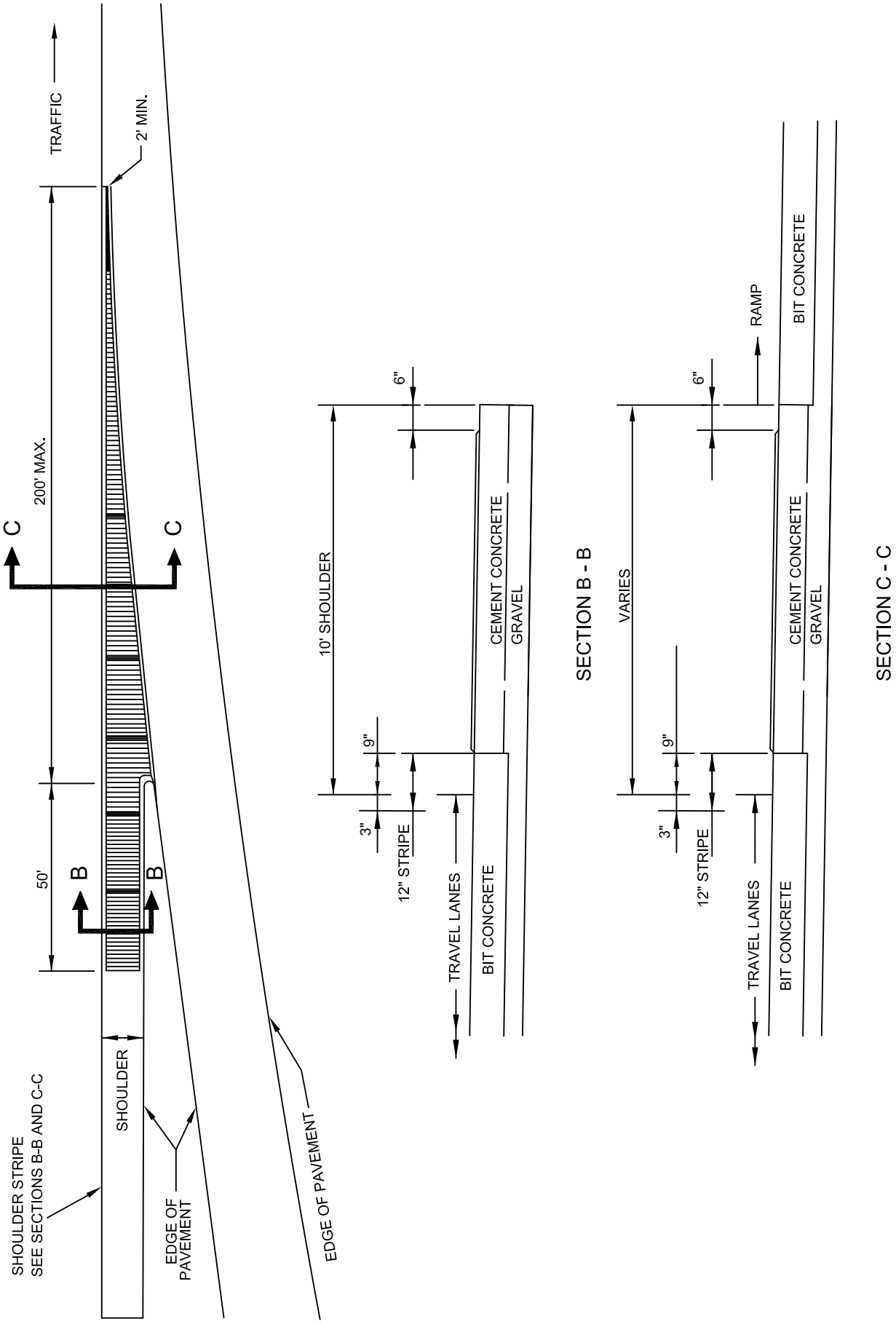

massDOT
Massachusetts Department of Transportation
Highway Division

CONSTRUCTION STANDARDS

SHOULDER SECTION OF SCORED CEMENT CONCRETE PAVEMENT

DATE OF ISSUE
MARCH 2012

DRAWING NUMBER
E 105.2.1

massDOT
Massachusetts Department of Transportation
Highway Division

CONSTRUCTION STANDARDS

HOT MIX ASPHALT BERM
TYPE A

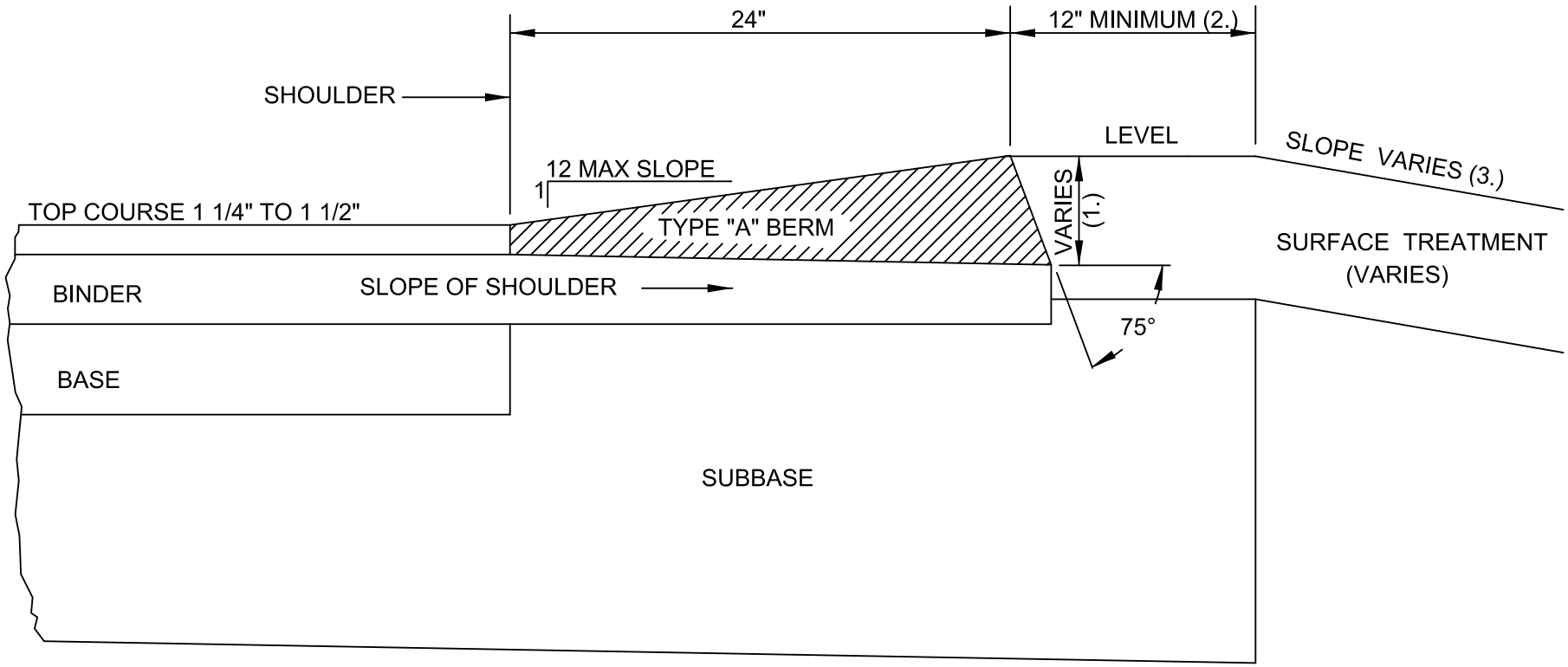

NOTE:

FOR MODIFIED BERM THE SLOPE REMAINS CONSTANT AT 1 (V) TO 12 (H)

1. THIS DIMENSION VARIES WITH THE THICKNESS OF THE TOP COURSE AND SLOPE OF BINDER
2. SEE E 401.1.1 FOR TYPICAL SECTION AT GUARDRAIL LOCATIONS
3. SEE TYPICAL SECTIONS FOR PROJECT

DATE OF ISSUE
MARCH 2012

DRAWING NUMBER
E 106.1.0

massDOT
Massachusetts Department of Transportation
Highway Division

CONSTRUCTION STANDARDS

HOT MIX ASPHALT CURBS

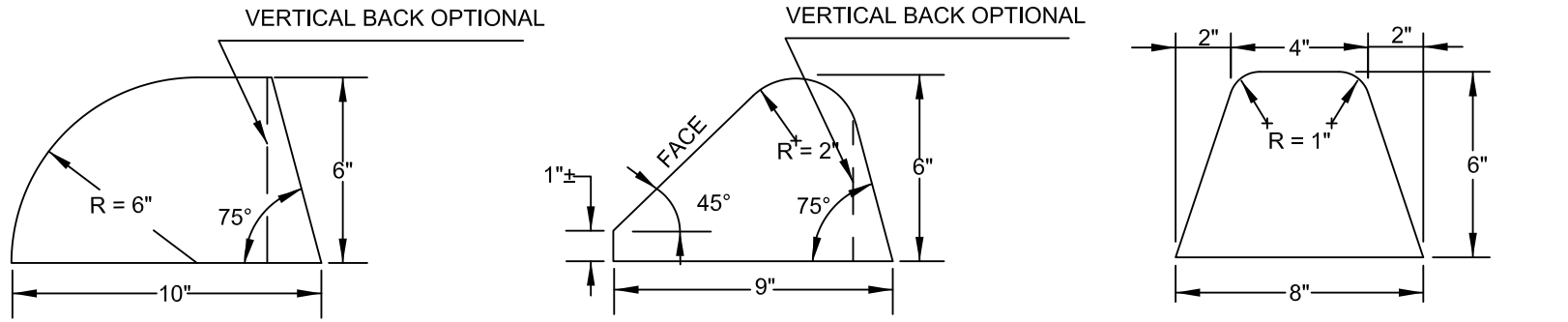

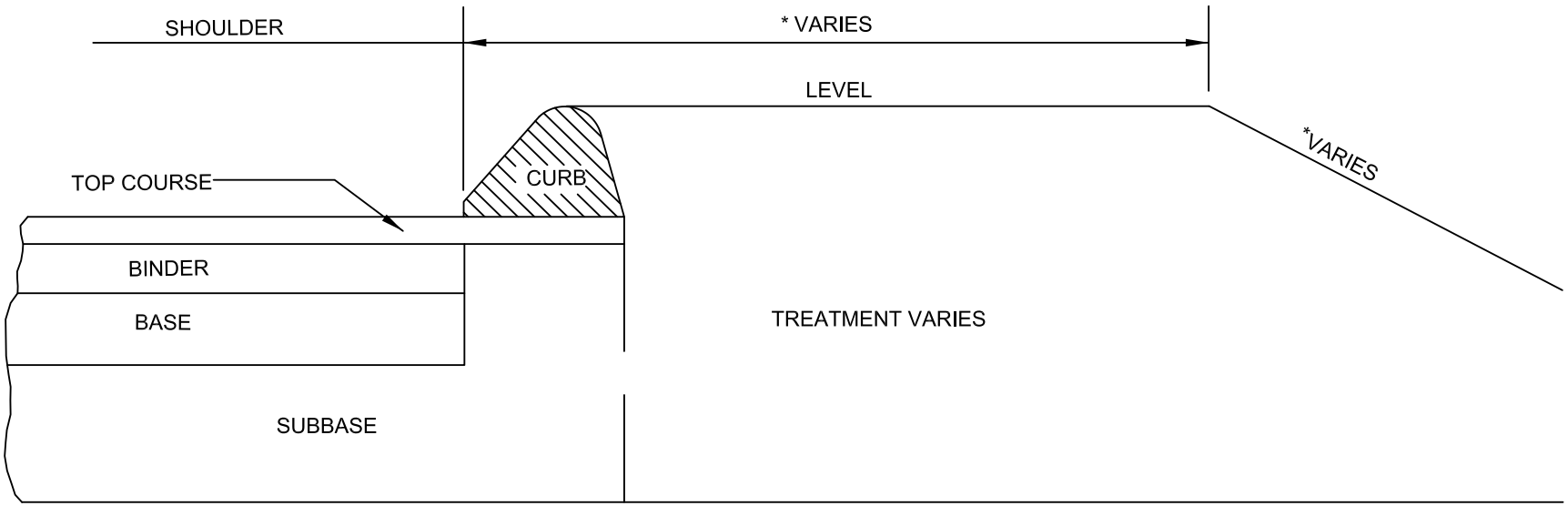

METHOD OF SETTING-TYPICAL FOR ALL TYPES

* SEE TYPICAL SECTIONS FOR PROJECT.

DATE OF ISSUE
MARCH 2012

DRAWING NUMBER
E 106.2.0

massDOT
Massachusetts Department of Transportation
Highway Division

CONSTRUCTION STANDARDS

METHOD OF SETTING VERTICAL CURB

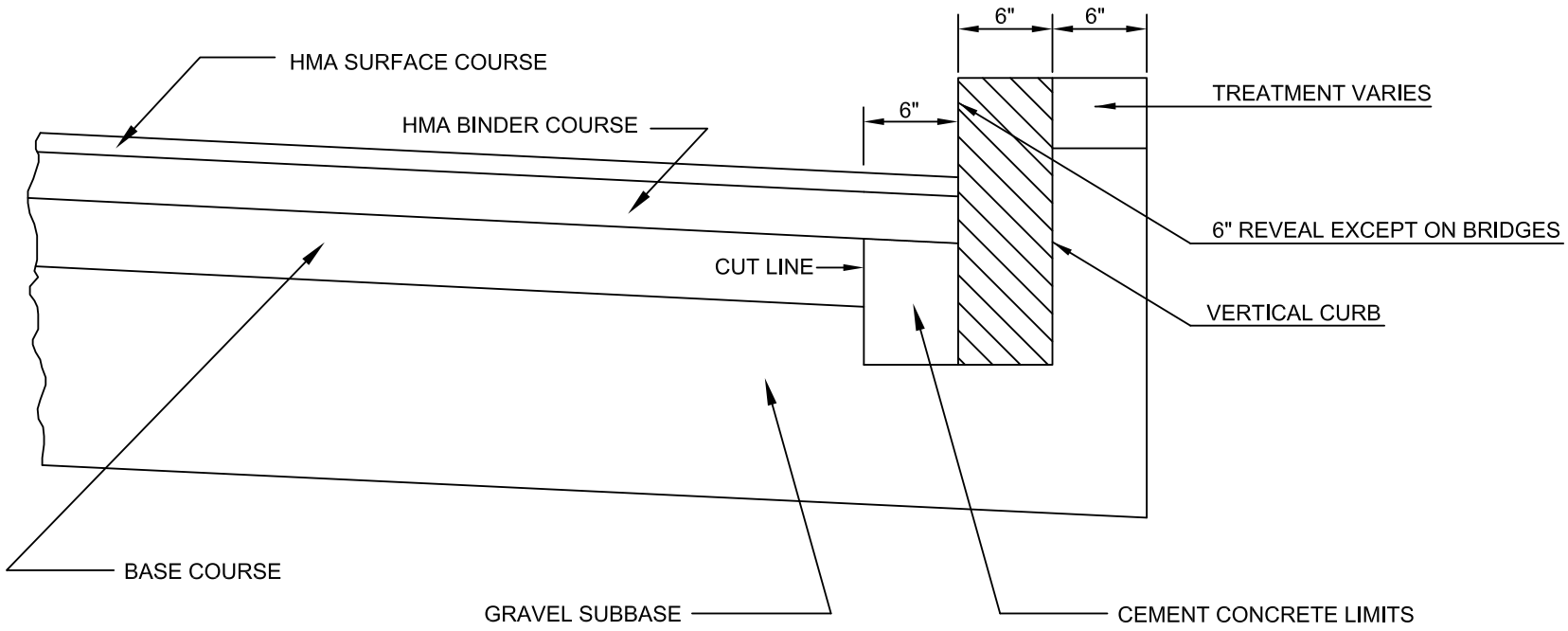

NOTES:

1. THIS PROCEDURE IS APPLICABLE ONLY IF CURB IS TO BE SET AFTER BASE COURSE IS IN PLACE PRIOR TO BINDER AND TOP PLACEMENT.

2. CUT NEAT LINE 6" FROM CURB LINE AND REMOVE BASE AND GRAVEL. REPLACE WITH CEMENT CONCRETE.

3. ANY DESIGNATED CEMENT CONCRETE THAT IS ACCEPTABLE UNDER SECTION M4 OF THE STANDARD SPECIFICATIONS MAY BE USED; ALL TEST REQUIREMENTS ARE WAIVED. HOT MIX ASPHALT SHALL NOT TO BE USED AS A SUBSTITUTE.

4. PAYMENT PER FOOT OF CURB IS INCLUSIVE OF ALL ITEMS OF WORK REQUIRED TO COMPLETE PROPER INSTALLATION OF THE CURB.

DATE OF ISSUE
MARCH 2012

DRAWING NUMBER
E 106.3.0R

massDOT
Massachusetts Department of Transportation
Highway Division

CONSTRUCTION STANDARDS

METHOD OF SETTING
SLOPED EDGING

DATE OF ISSUE
MARCH 2012

DRAWING NUMBER
E 106.5.0

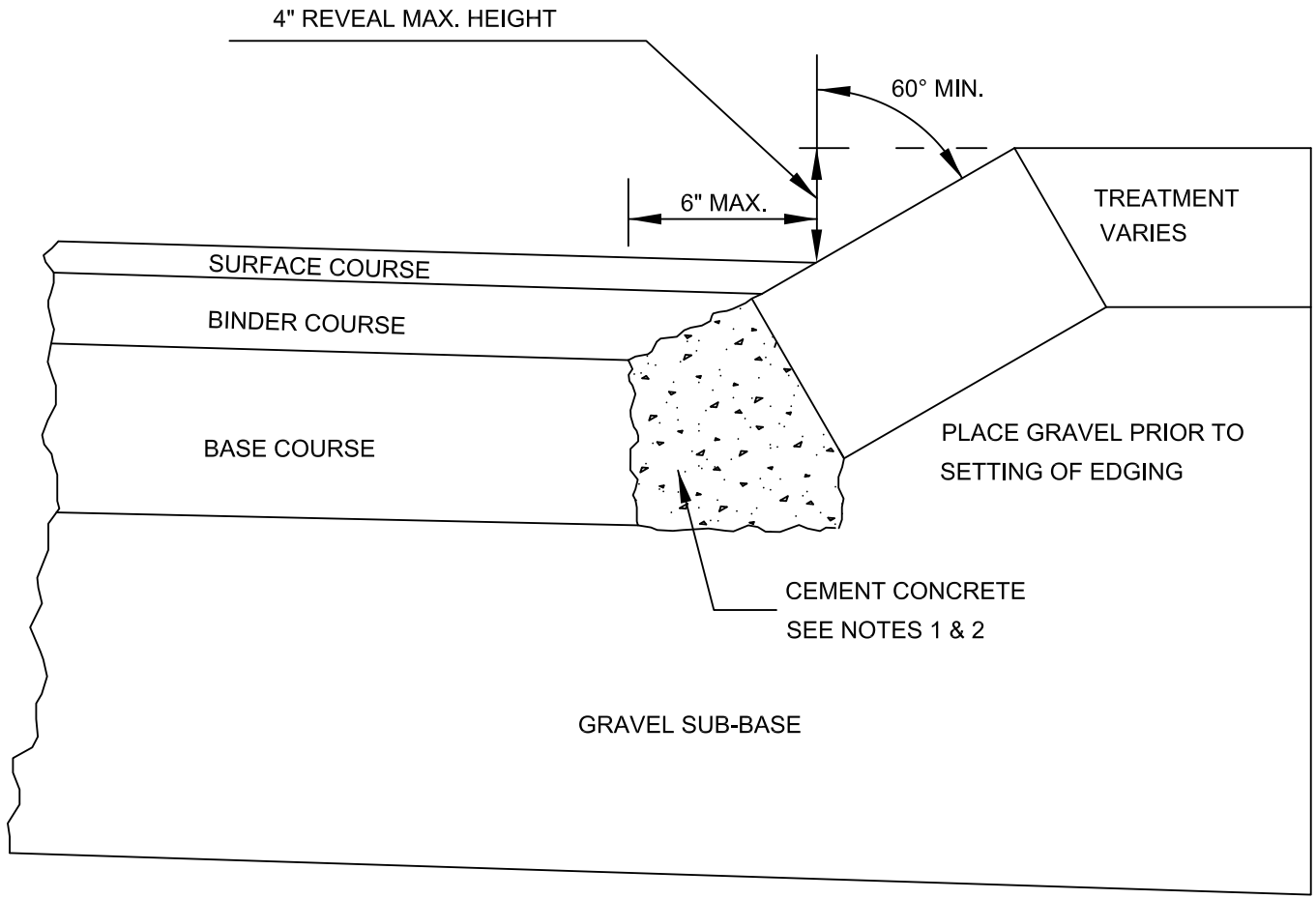

SLOPED EDGING

NOTES:

1. ANY DESIGNATED CEMENT CONCRETE THAT IS ACCEPTABLE TO THE DEPARTMENT UNDER SECTION M4 OF THE STANDARD SPECIFICATIONS; ALL TEST REQUIREMENTS ARE WAIVED. HOT MIX ASPHALT SHALL NOT TO BE USED AS A SUBSTITUTE.

2. PAYMENT FOR CEMENT CONCRETE WILL BE INCLUDED IN THE PRICE PER FOOT OF EDGING.

3. THE REVEAL IS TO BE A MAXIMUM OF 4" UNDER ALL CONDITIONS, THE ANGLE IS TO BE A MINIMUM OF 60° FROM VERTICAL UNDER ALL CONDITIONS.

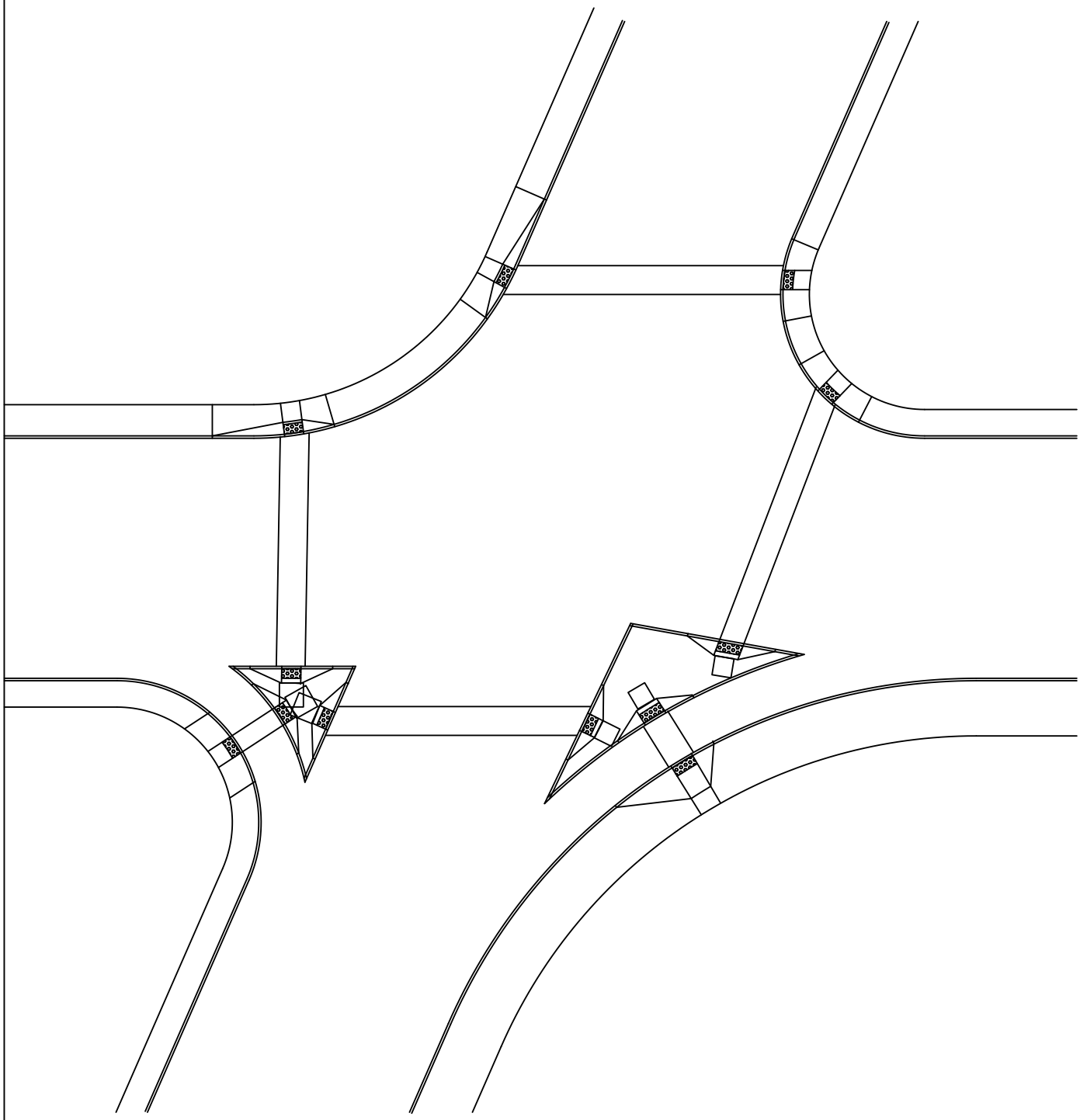

NOTES:

1. LEVEL LANDINGS CAN OVERLAP
2. ISLAND AREAS SUBJECT TO TRAVEL SHOULD BE TREATED AS PLAZAS "NOT MORE THAN 2% SLOPE IN ANY DIRECTION"
3. ALL RAMPS BY REGULATION MUST BE PERPENDICULAR TO THE CURB AT THE GUTTER
4. RAMPS SHOULD BE BOTH ALIGNED TOWARD THE RECEIVING RAMP AND WITHIN THE GENERALLY PREFERRED PEDESTRIAN PHASE OF TRAFFIC

massDOT Massachusetts Department of Transportation Highway Division

CONSTRUCTION STANDARDS

TYPICAL INTERSECTION CROSS WALK LAYOUT

DATE OF ISSUE
MARCH 2012

DRAWING NUMBER
E 107.1.0

massDOT
Massachusetts Department of Transportation
Highway Division

CONSTRUCTION STANDARDS

WHEELCHAIR RAMPS
LESS THAN 12'-4" SIDEWALK

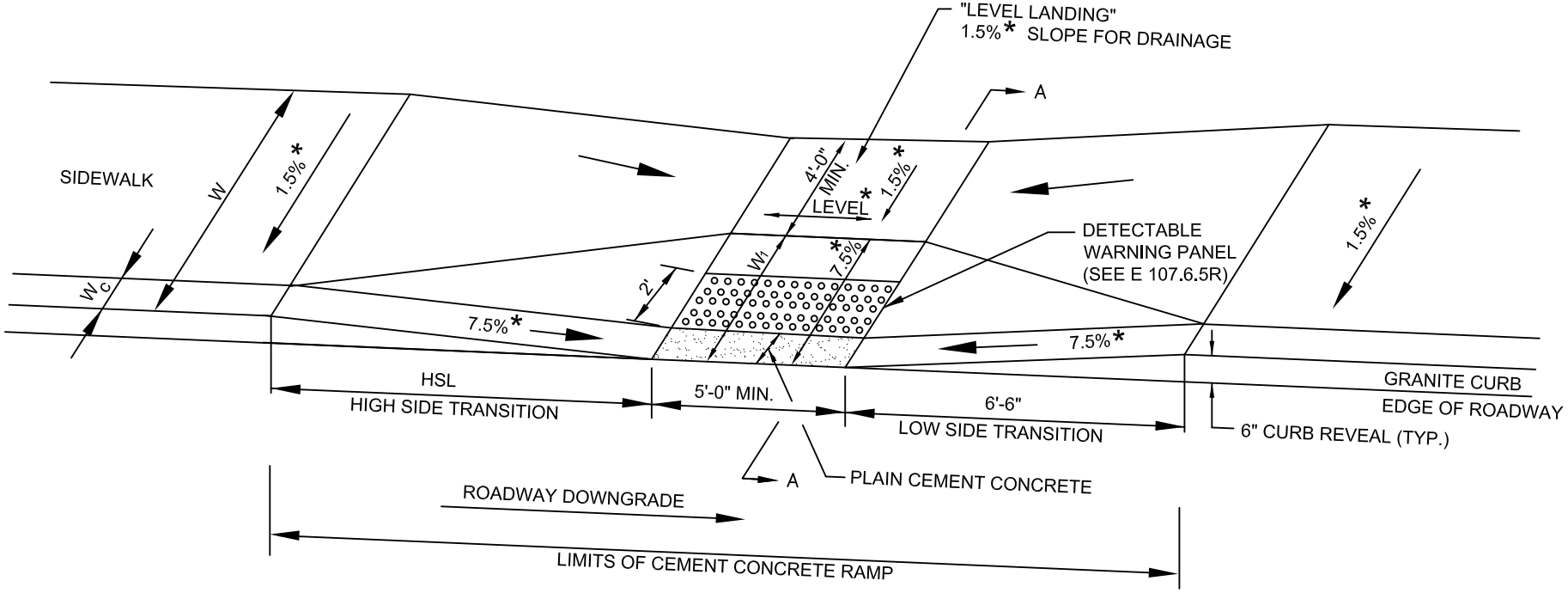

LEGEND

HSL = HIGH SIDE TRANSITION LENGTH (SEE E 107.9.0R)

W = SIDEWALK WIDTH

W_c = CURB WIDTH

W_1 = PERPENDICULAR RAMP LENGTH

CC = CEMENT CONCRETE

* = TOLERANCE FOR CONSTRUCTION ±0.5%

USABLE SIDEWALK WIDTH PER AAB = W-Wc

RAMP LENGTH, W1 = W-4'-0" Min

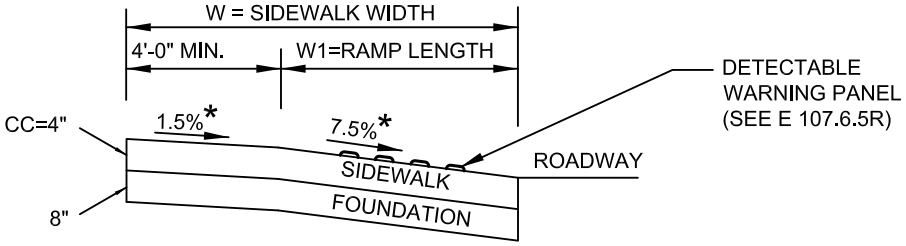

SECTION A-A

DATE OF ISSUE
MARCH 2012

DRAWING NUMBER
E 107.2.0R

massDOT
Massachusetts Department of Transportation
Highway Division

CONSTRUCTION STANDARDS

WHEELCHAIR RAMP ON NARROW SIDEWALK WITH DETECTABLE WARNING PANEL

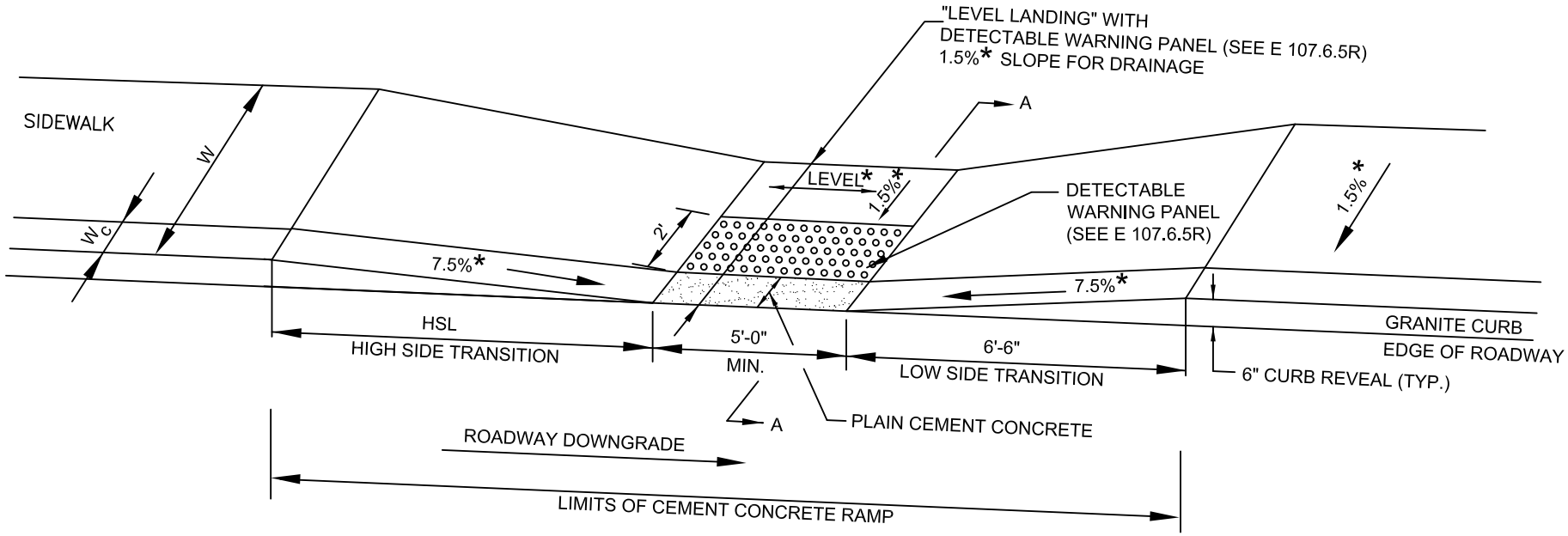

LEGEND

HSL = HIGH SIDE TRANSITION LENGTH (SEE E 107.9.0R)

W = SIDEWALK WIDTH

W_C = CURB WIDTH

CC = CEMENT CONCRETE

* = TOLERANCE FOR CONSTRUCTION ±0.5%

USABLE SIDEWALK WIDTH PER AAB = W-Wc
USABLE SIDEWALK WIDTH PER AAB IS NOT TO BE LESS THAN 4'0"
SEE E 107.6.5R FOR DETAILS OF DETECTABLE WARNING PANEL

NOTE:

ROADWAY, GUTTER, AND FIRST 6" OF SIDEWALK TO BE ADJUSTED FOR FIELD CONDITIONS

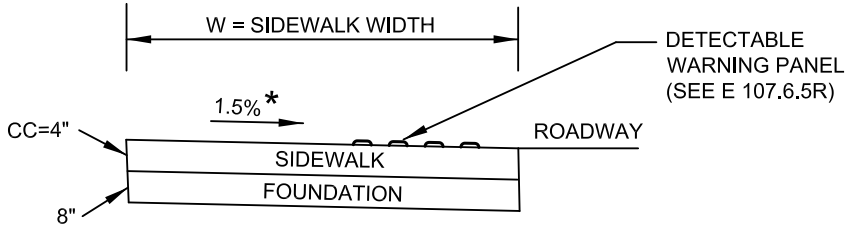

SECTION A-A

DATE OF ISSUE
MARCH 2012

DRAWING NUMBER
E 107.2.1R

massDOT
Massachusetts Department of Transportation
Highway Division

CONSTRUCTION STANDARDS

WHEELCHAIR RAMPS
GREATER THAN 12'–4" SIDEWALK

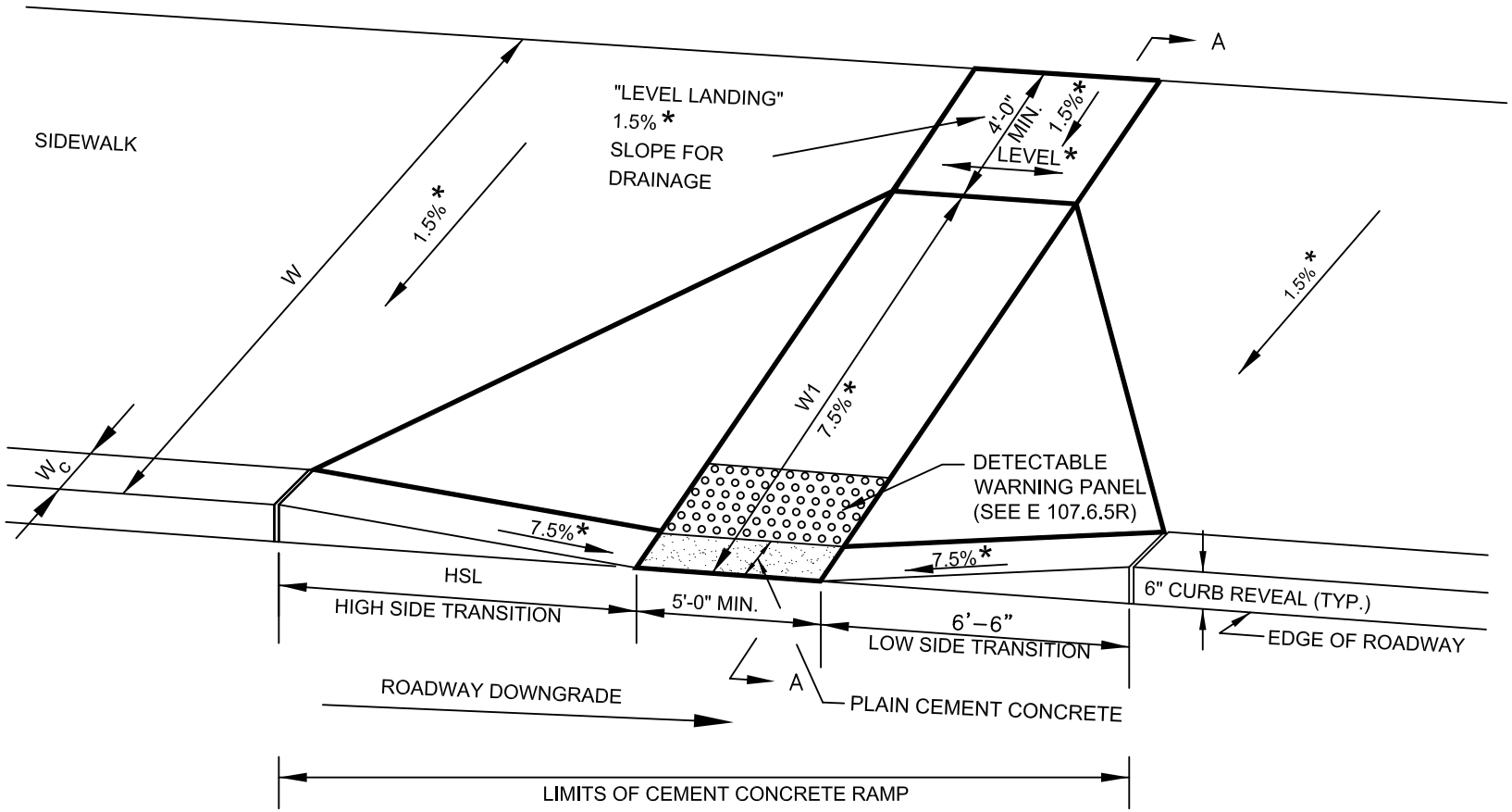

LEGEND

HSL = HIGH SIDE TRANSITION LENGTH (SEE E 107.9.0R)

W = SIDEWALK WIDTH

W_C = CURB WIDTH

W 1 = PERPENDICULAR RAMP LENGTH

Cc = CEMENT CONCRETE

* = TOLERANCE FOR CONSTRUCTION ±0.5%

USABLE SIDEWALK WIDTH PER AAB = W-Wc

RAMP LENGTH, W1 = W-4'-0" Min

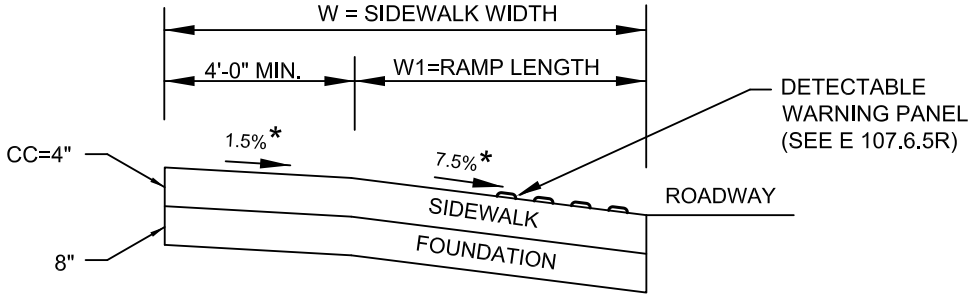

SECTION A-A

DATE OF ISSUE
MARCH 2012

DRAWING NUMBER
E 107.3.0R

massDOT
Massachusetts Department of Transportation
Highway Division

CONSTRUCTION STANDARDS

WHEELCHAIR RAMP FOR ONE CONTINUOUS DIRECTION OF PEDESTRIAN TRAVEL

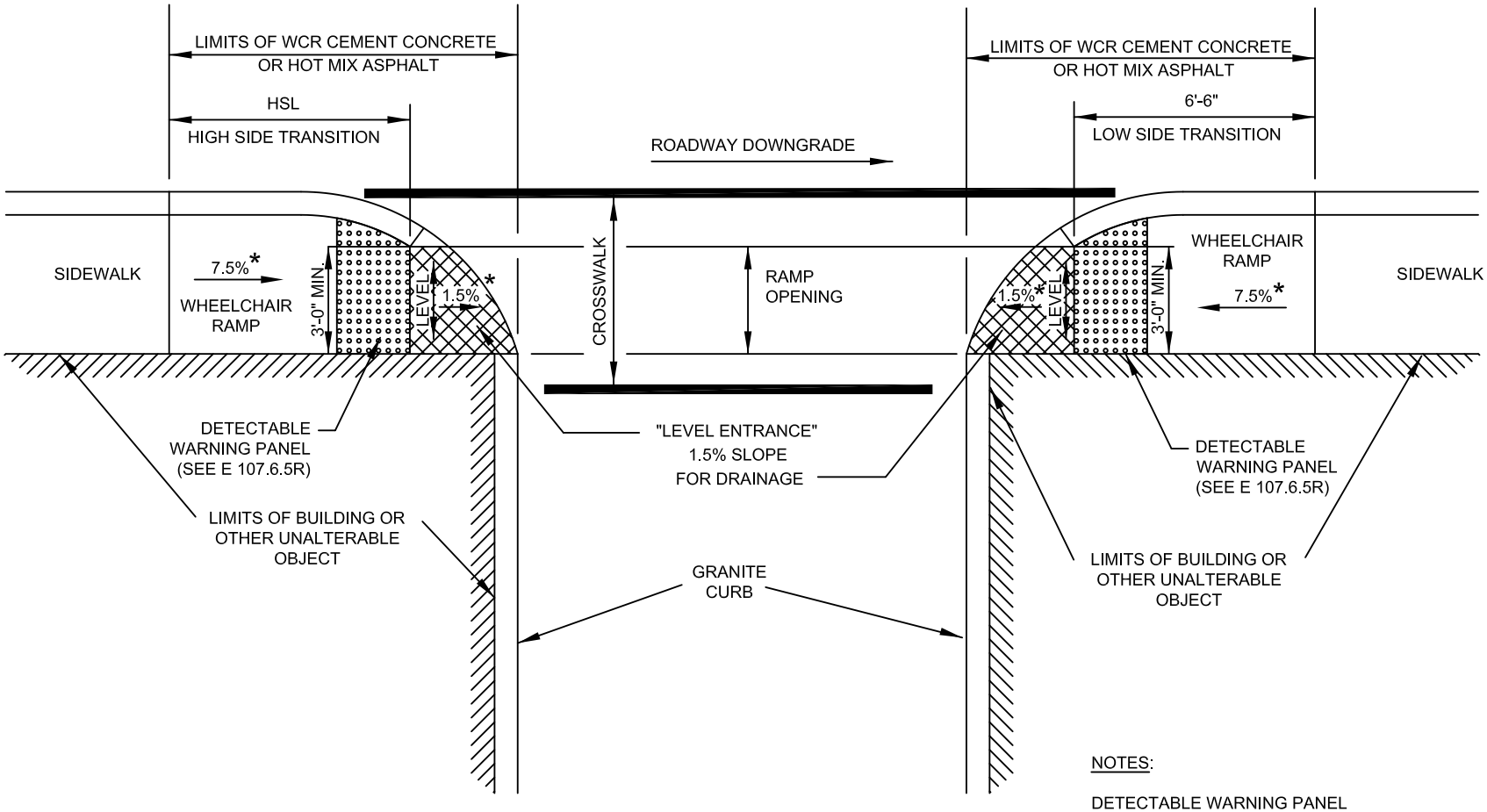

LEGEND

HSL = HIGH SIDE TRANSITION LENGTH
(SEE E 107.9.0R)

* = TOLERANCE FOR CONSTRUCTION ±0.5%

NOTES:

DETECTABLE WARNING PANEL
LOCATED NOT LESS THAN 6" OR MORE THAN 24"
FROM ROADWAY EDGE (GUTTER LINE). TRUNCATED
DOMES TO BE ALIGNED WITH DIRECTION OF TRAVEL.

FOR DETAILS OF TRUNCATED DOMES SEE DRAWING
E 107.6.5R.

ROADWAY, GUTTER, AND FIRST 6" OF SIDEWALK TO
BE ADJUSTED FOR FIELD CONDITIONS.

DATE OF ISSUE
MARCH 2012

DRAWING NUMBER
E 107.6.0R

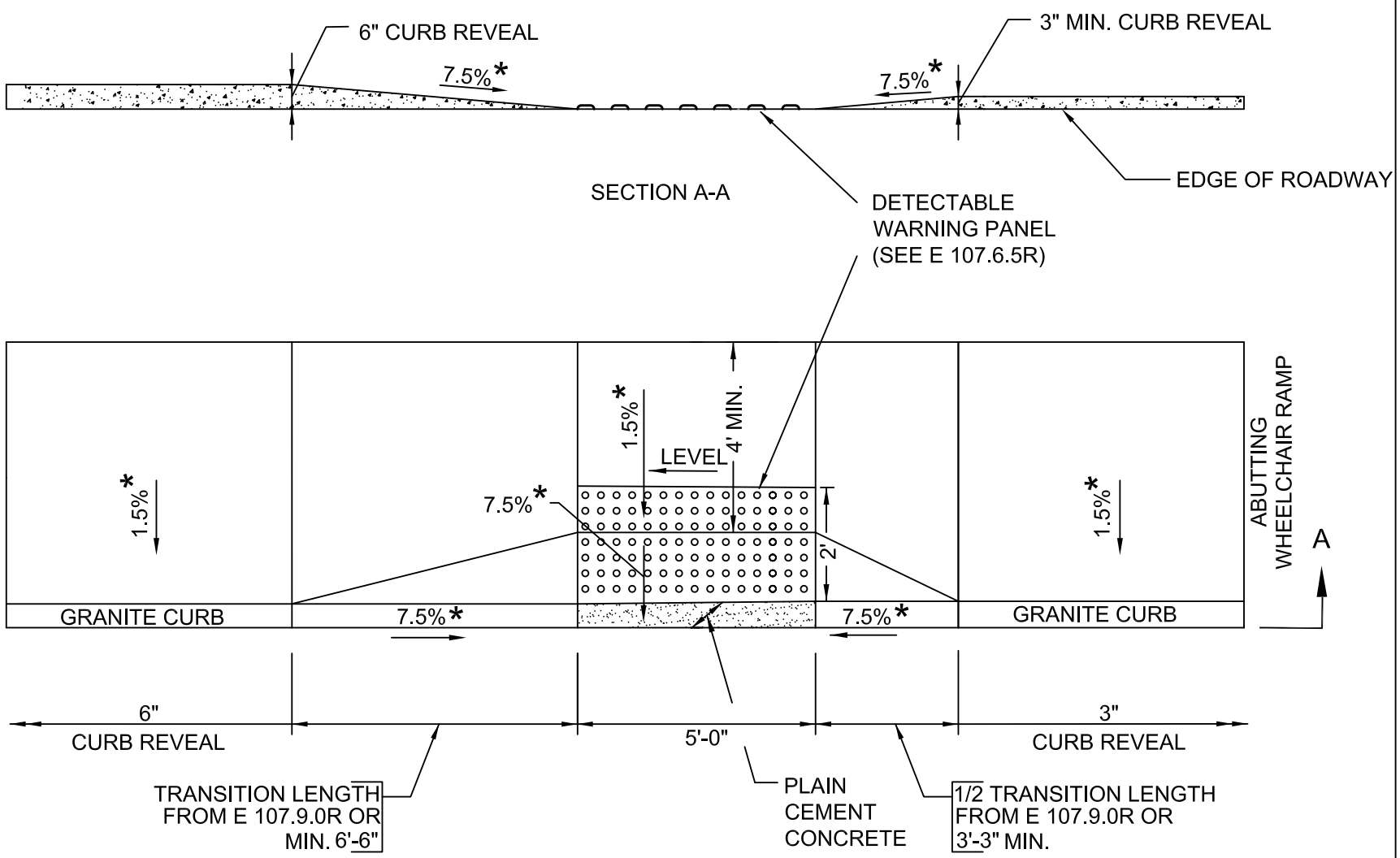

LEGEND

HSL = HIGH SIDE TRANSITION LENGTH
SEE E 107.9.0R

* = TOLERANCE FOR CONSTRUCTION ±0.5%

massDOT
Massachusetts Department of Transportation
Highway Division

CONSTRUCTION STANDARDS

WHEELCHAIR RAMP
WITH 3" CURB REVEAL

DATE OF ISSUE
MARCH 2012

DRAWING NUMBER
E 107.6.3R

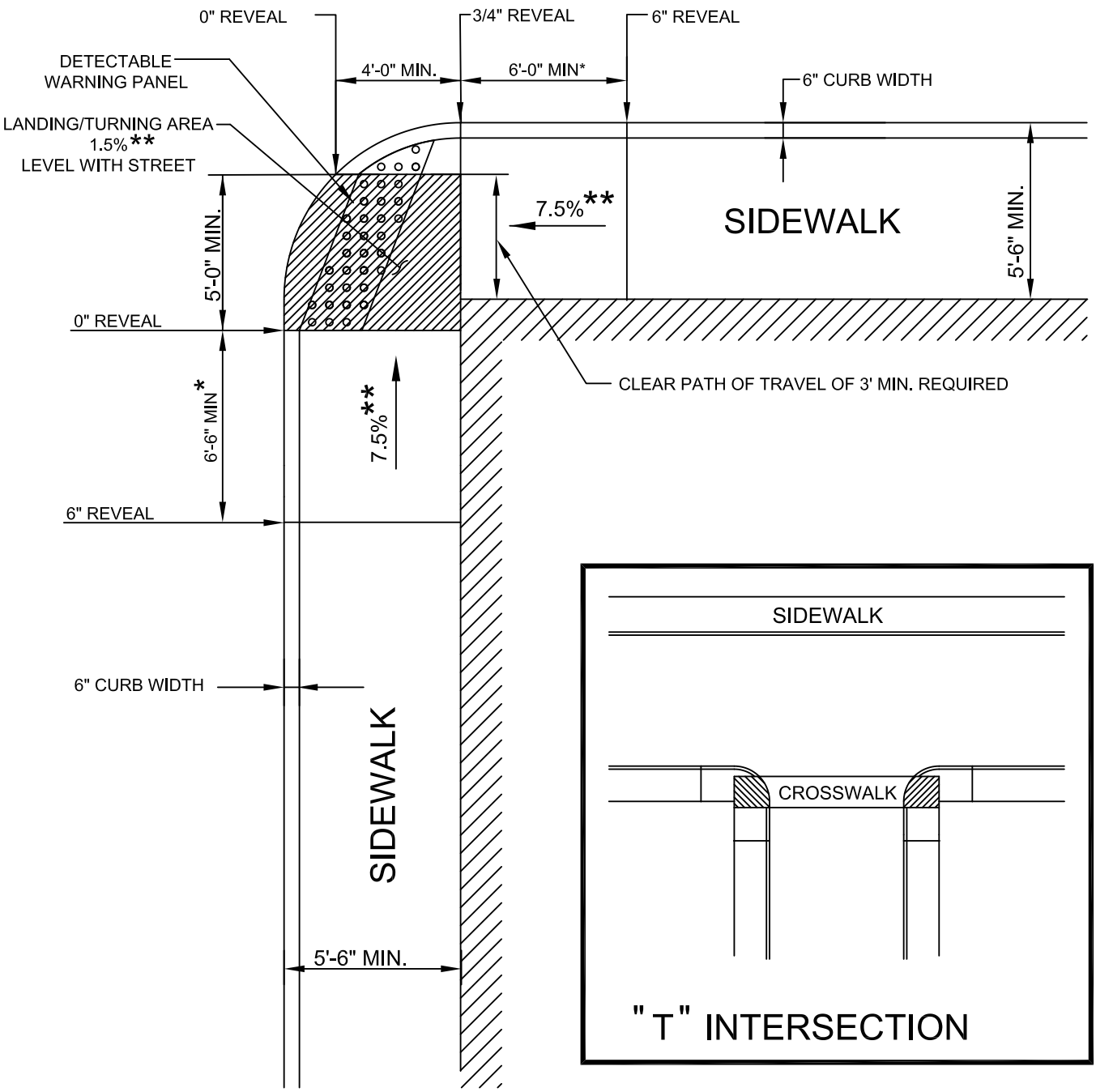

LEGEND

BUILDING OR OTHER UNALTERABLE CONDITION

* TRANSITION LENGTH SHOWN IS MINIMUM. (SEE E 107.9.0R)

** TOLERANCE FOR CONSTRUCTION ±0.5%

NOTE:

ROADWAY, GUTTER, AND FIRST 6" OF SIDEWALK TO BE ADJUSTED FOR FIELD CONDITIONS

massDOT Massachusetts Department of Transportation Highway Division

CONSTRUCTION STANDARDS

"T" INTERSECTION WHEELCHAIR RAMP

DATE OF ISSUE MARCH 2012

DRAWING NUMBER **E 107.6.4R**

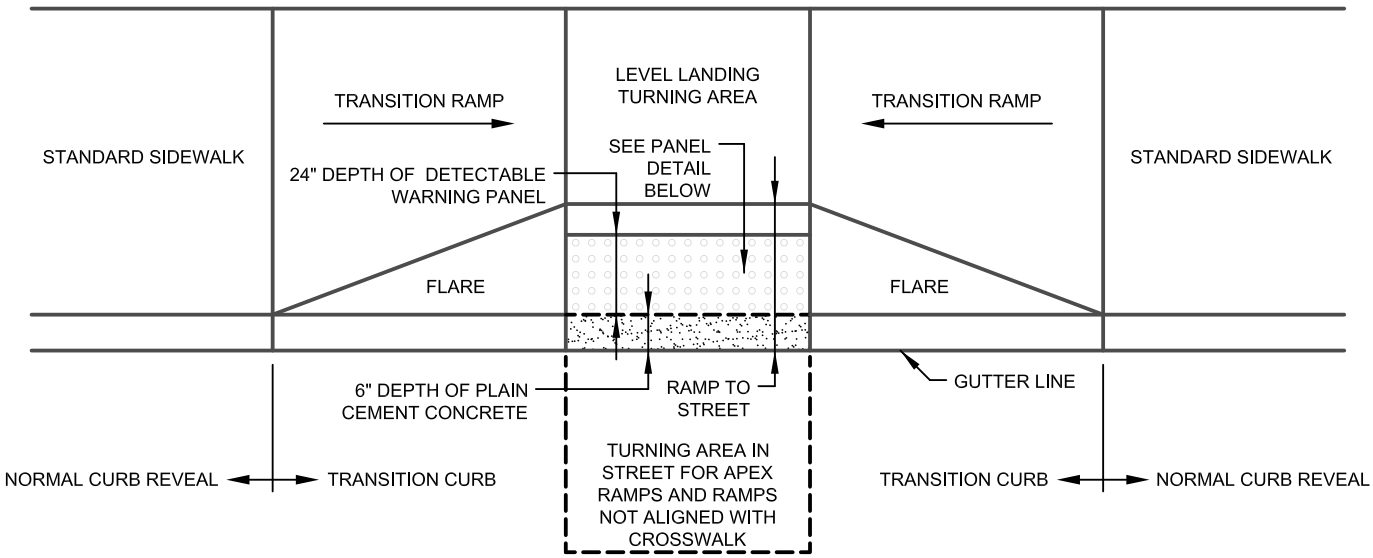

TYPICAL INSTALLATION

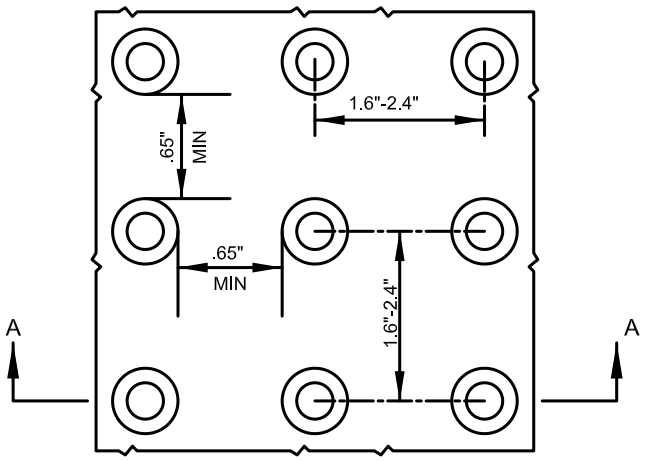

DETAIL OF DETECTABLE WARNING PANEL

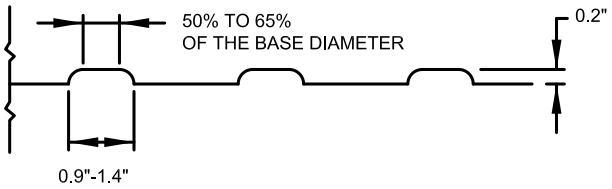

SECTION A-A

NOTE:

PANELS MAY BE CONCRETE PRECAST OR CAST IN PLACE OR OTHER SUITABLE MATERIAL PERMANENTLY APPLIED TO THE RAMP. DETECTABLE WARNING SURFACES SHALL CONTRAST VISUALLY WITH ADJACENT WALKING SURFACES EITHER LIGHT-ON-DARK, OR DARK-ON-LIGHT.

massDOT Massachusetts Department of Transportation Highway Division CONSTRUCTION STANDARDS	DETECTABLE WARNING PANEL FOR WHEELCHAIR RAMPS AND STANDARD RAMP TERMINOLOGY	DATE OF ISSUE MARCH 2012 DRAWING NUMBER **E 107.6.5R**

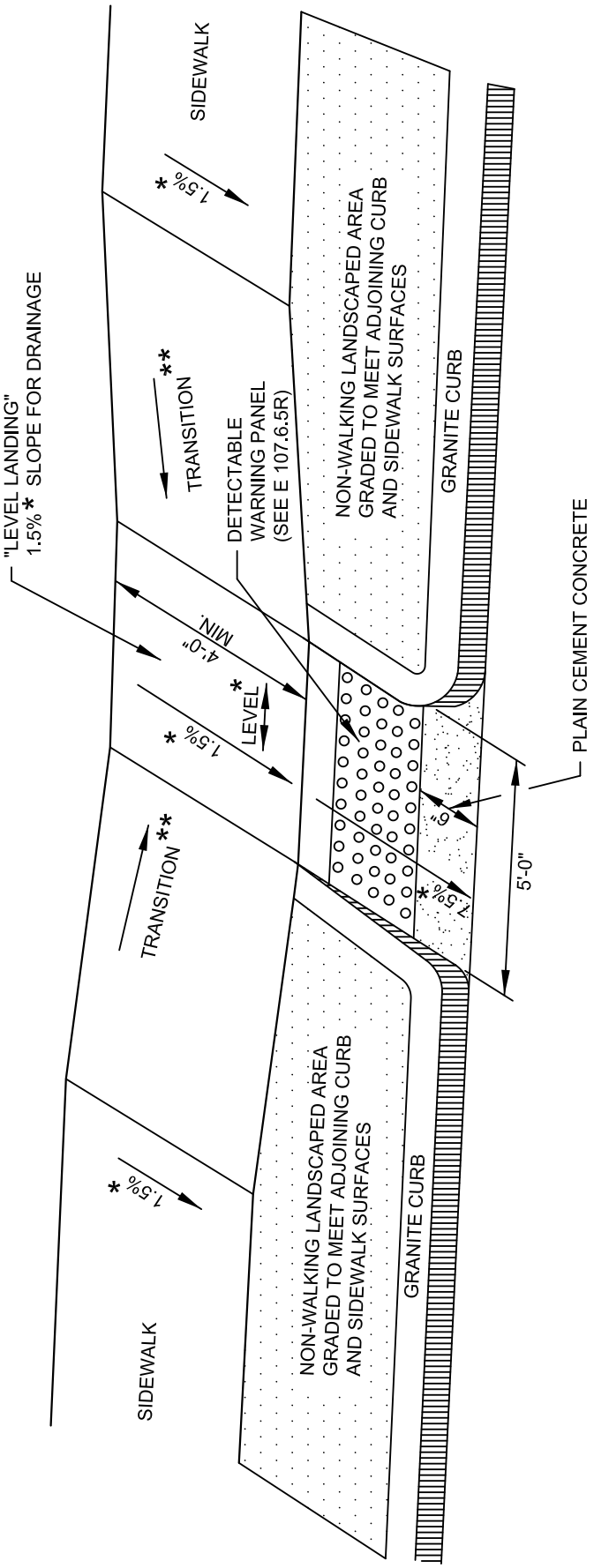

LEGEND

* = TOLERANCE FOR CONSTRUCTION ±0.5%

** = SEE E 107.9R FOR TRANSITION LENGTH

massDOT
Massachusetts Department of Transportation
Highway Division

CONSTRUCTION STANDARDS

WHEELCHAIR RAMP WITH LANDSCAPING STRIP

DATE OF ISSUE
MARCH 2012

DRAWING NUMBER
E 107.6.9R

massDOT
Massachusetts Department of Transportation
Highway Division

CONSTRUCTION STANDARDS

SIDEWALK THROUGH DRIVEWAYS WITHOUT CURB RETURNS

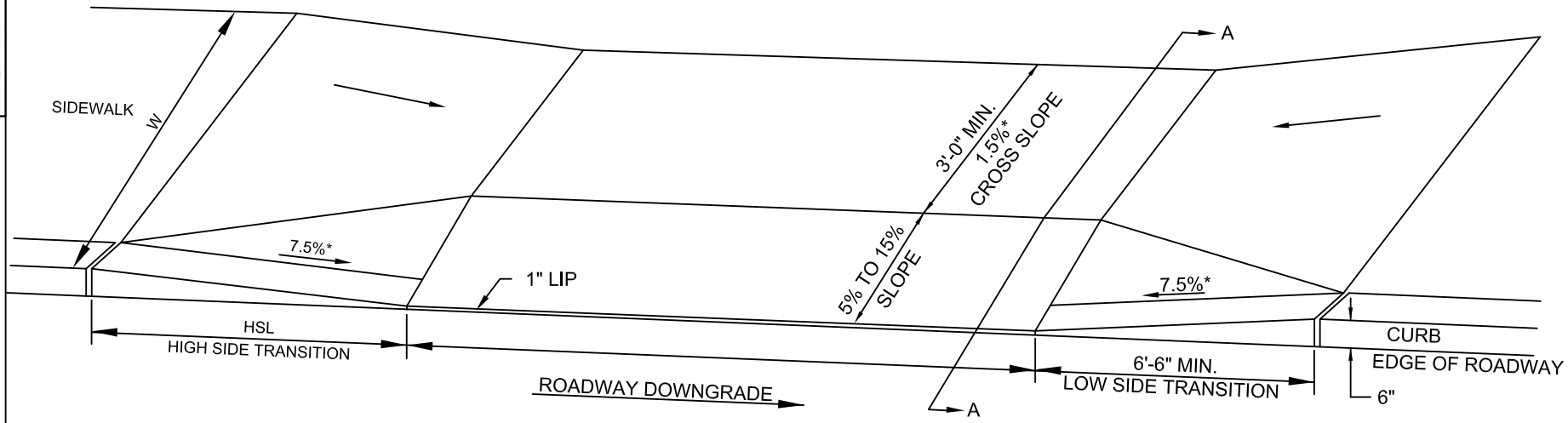

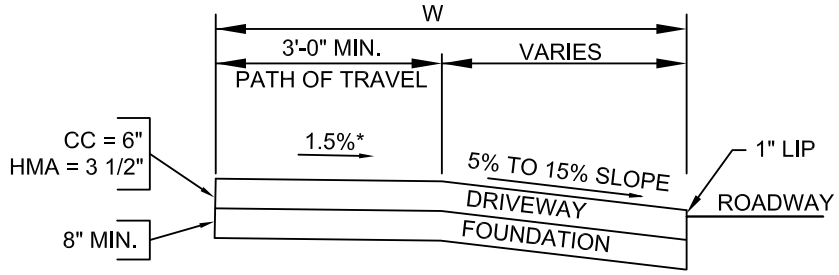

SECTION A-A

LEGEND

HSL = HIGH SIDE TRANSITION LENGTH. SEE E 107.9.0
W = SIDEWALK WIDTH
* = TOLERANCE FOR CONSTRUCTION ±0.5%
CC = CEMENT CONCRETE
HMA = HOT MIX ASPHALT

DATE OF ISSUE
MARCH 2012

DRAWING NUMBER
E 107.7.0

massDOT
Massachusetts Department of Transportation
Highway Division

CONSTRUCTION STANDARDS

SIDEWALK THROUGH DRIVEWAYS WITH CURB RETURNS 2' CURB CORNERS

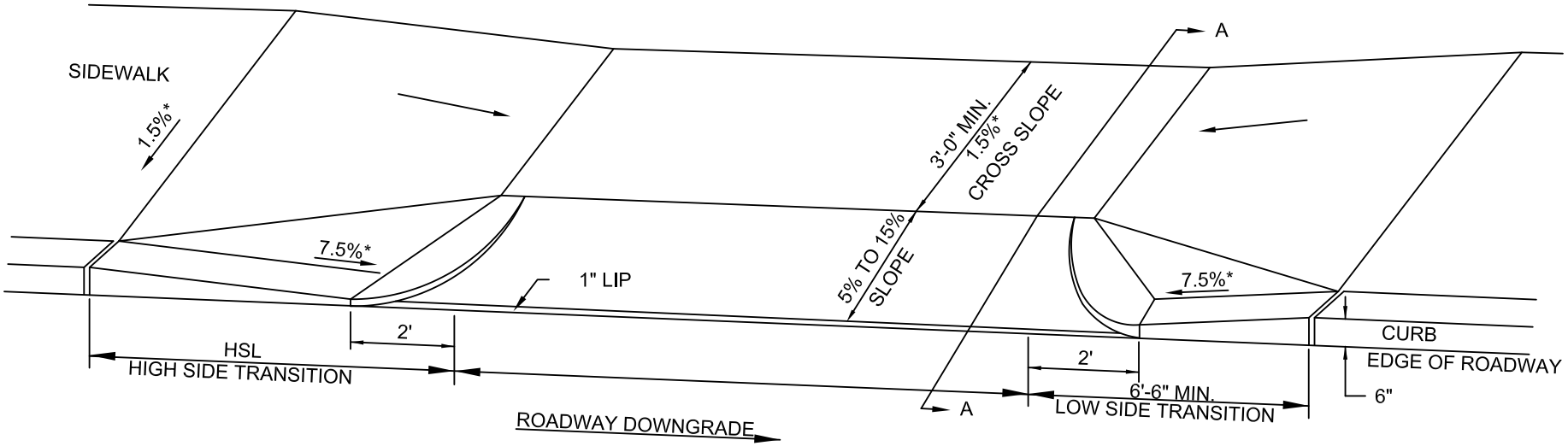

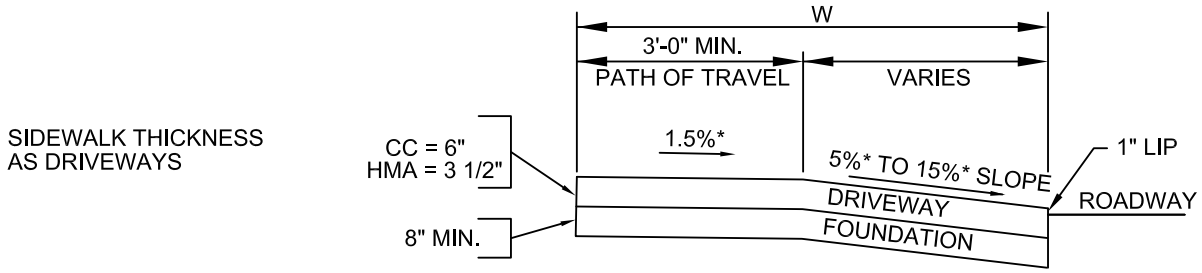

SECTION A-A

LEGEND

HSL = HIGH SIDE TRANSITION LENGTH
W = SIDEWALK WIDTH
* = TOLERANCE FOR CONSTRUCTION ±0.5%
CC = CEMENT CONCRETE
HMA = HOT MIX ASPHALT

DATE OF ISSUE
MARCH 2012

DRAWING NUMBER
E 107.8.0

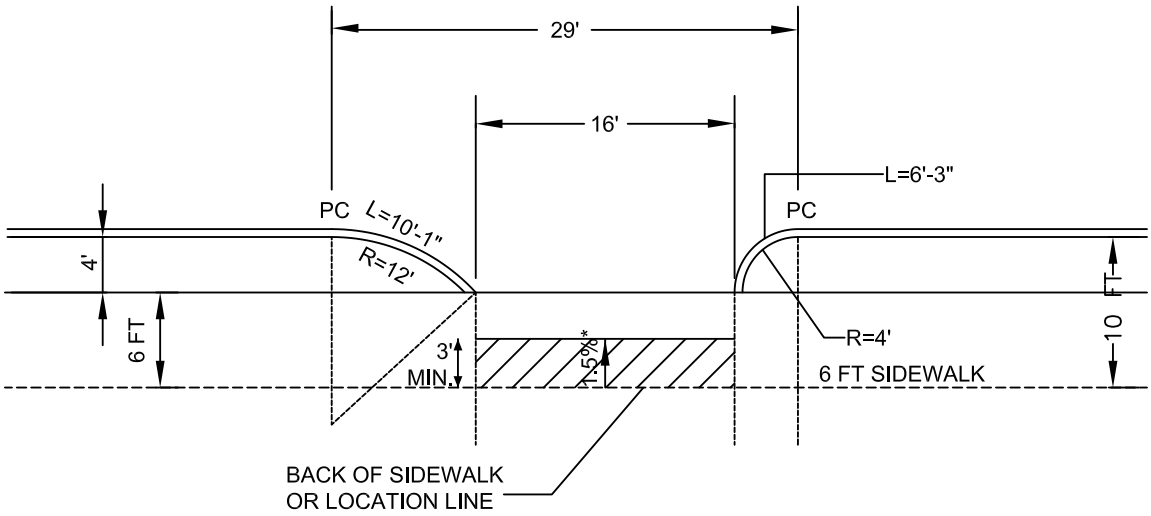

10 FT SIDEWALK LAYOUT

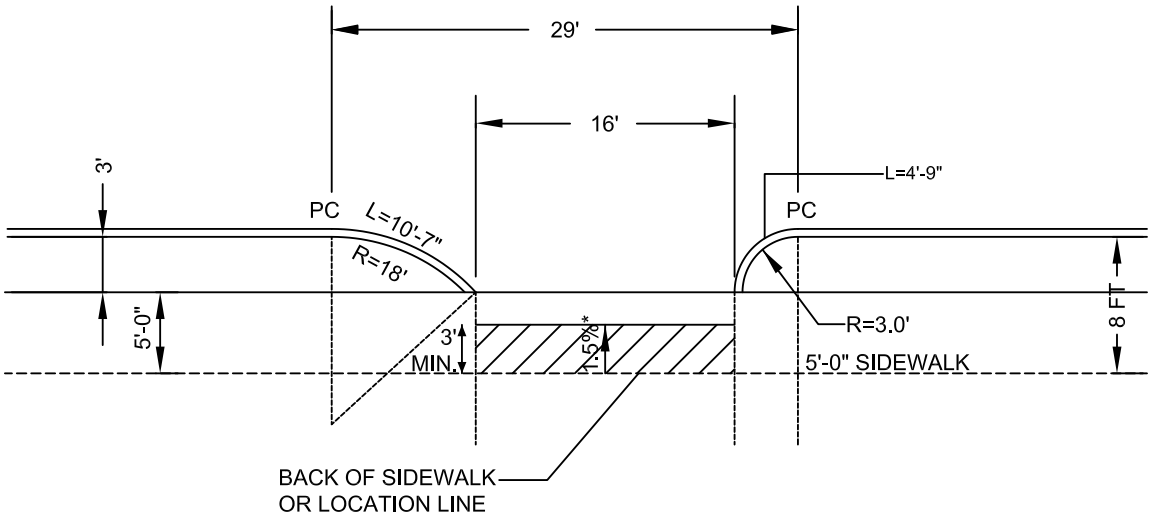

8 FT SIDEWALK LAYOUT

NOTES:

1. WHEN THE SIDEWALK IS PAVED TO THE CURB LINE, USE SHORT CURB RETURNS AT THE HIGHWAY CURB LINE PC'S, SHOWN IN THESE DESIGNS.

*MUST MAINTAIN PATH OF TRAVEL WITH 1.5% CROSS SLOPE (± 0.5% CONSTRUCTION TOLERANCE)

massDOT Massachusetts Department of Transportation Highway Division CONSTRUCTION STANDARDS	RESIDENTIAL DRIVEWAYS	DATE OF ISSUE MARCH 2012 DRAWING NUMBER **E 107.8.1**

ROADWAY PROFILE GRADE	* HIGH SIDE TRANSITION LENGTH
%	ENGLISH UNITS
=0%	6'-6"
>0% TO 1%	7'-8"
>1% TO 2%	9'-0"
>2% TO 3%	11'-0"
>3% TO 4%	14'-0"
>4% TO 5%	15'-0" Max

NOTE:

* BASED ON A DESIGN SLOPE OF 7.5% AND A REVEAL OF 6".

massDOT Massachusetts Department of Transportation Highway Division

CONSTRUCTION STANDARDS

CURB TRANSITION LENGTH FOR WHEELCHAIR RAMPS

DATE OF ISSUE MARCH 2012

DRAWING NUMBER E 107.9.0

massDOT
Massachusetts Department of Transportation
Highway Division

CONSTRUCTION STANDARDS

CONCRETE BLOCK CATCH BASIN

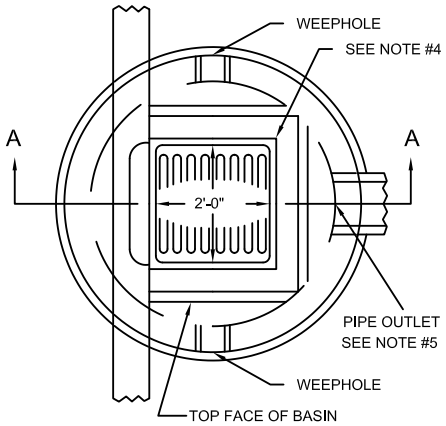

BASIN WITH CURB INLET

* MINIMUM DEPTH OF SUMP TO BE 2'
STANDARD DEPTH 3"

NOTES:

1. WEEPHOLES SHALL BE 4" PIPE OPENING OR EQUIVALENT WITH 1/4 IN. MESH, 23 GAGE GALVANIZED WIRE SCREEN COVERING. 2 CUBIC FEET OF CRUSHED STONE SHALL BE PLACED AROUND EACH WEEPHOLE.
2. BRICKS MAY BE USED BETWEEN TOP COURSE AND C.B. FRAME FOR GRADE ADJUSTMENT. FRAME SHALL BE SET IN FULL BED OF MORTAR.
3. FOR DESCRIPTION, MATERIALS AND CONSTRUCTION METHODS, SEE STANDARD SPECIFICATIONS.
4. DETAILS SHOWN ON DRAWINGS E 201.6.0 - E 201.11.0
5. FACE OF PIPE FLUSH OR NOT TO PROJECT MORE THAN 4 IN. FROM FACE OF WALL ALONG CENTERLINE OF PIPE.

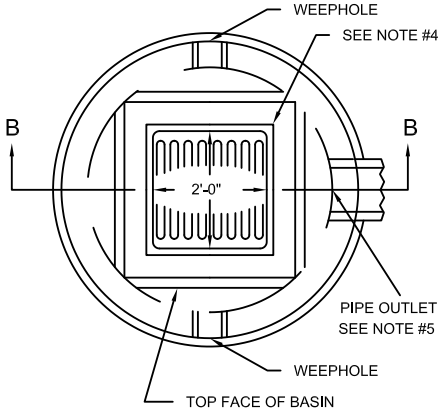

BASIN WITH 4 FLANGE INLET

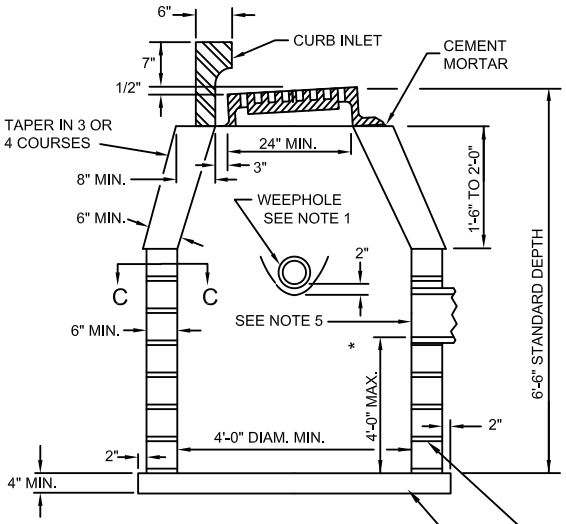

SECTION A-A

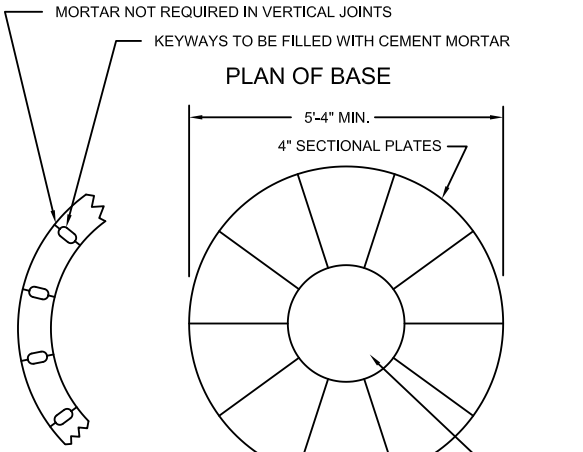

SECTION C-C

SOLID SECTION, OR FILL HOLE WITH BRICKS AND MORTAR, OR FILL WITH
4000 PSI - 1 1/2" - 565LB
OR 4000 PSI - 3/4" - 610 LB
(IF CONCRETE IS HAND MIXED SEE LATEST SPECIFICATIONS.)

BLOCKS TO BE SET IN FULL BED OF CEMENT MORTAR

4000 PSI - 1 1/2" - 565LB
OR 4000 PSI - 3/4" - 610 LB
CEMENT COMCRETE OR PRECAST
CONCRETE SECTIONAL PLATES. SEE ABOVE.

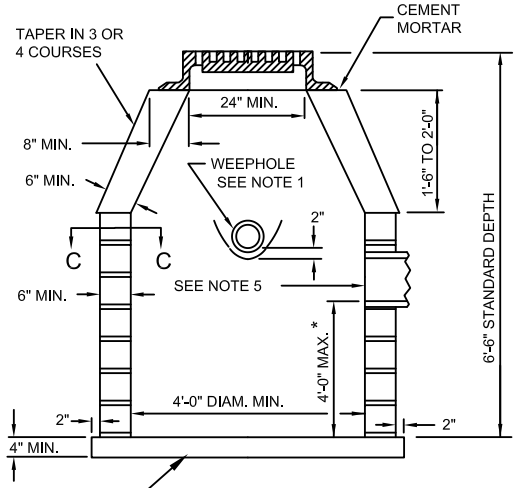

SECTION B-B

DATE OF ISSUE
MARCH 2012

DRAWING NUMBER
E 201.3.0R

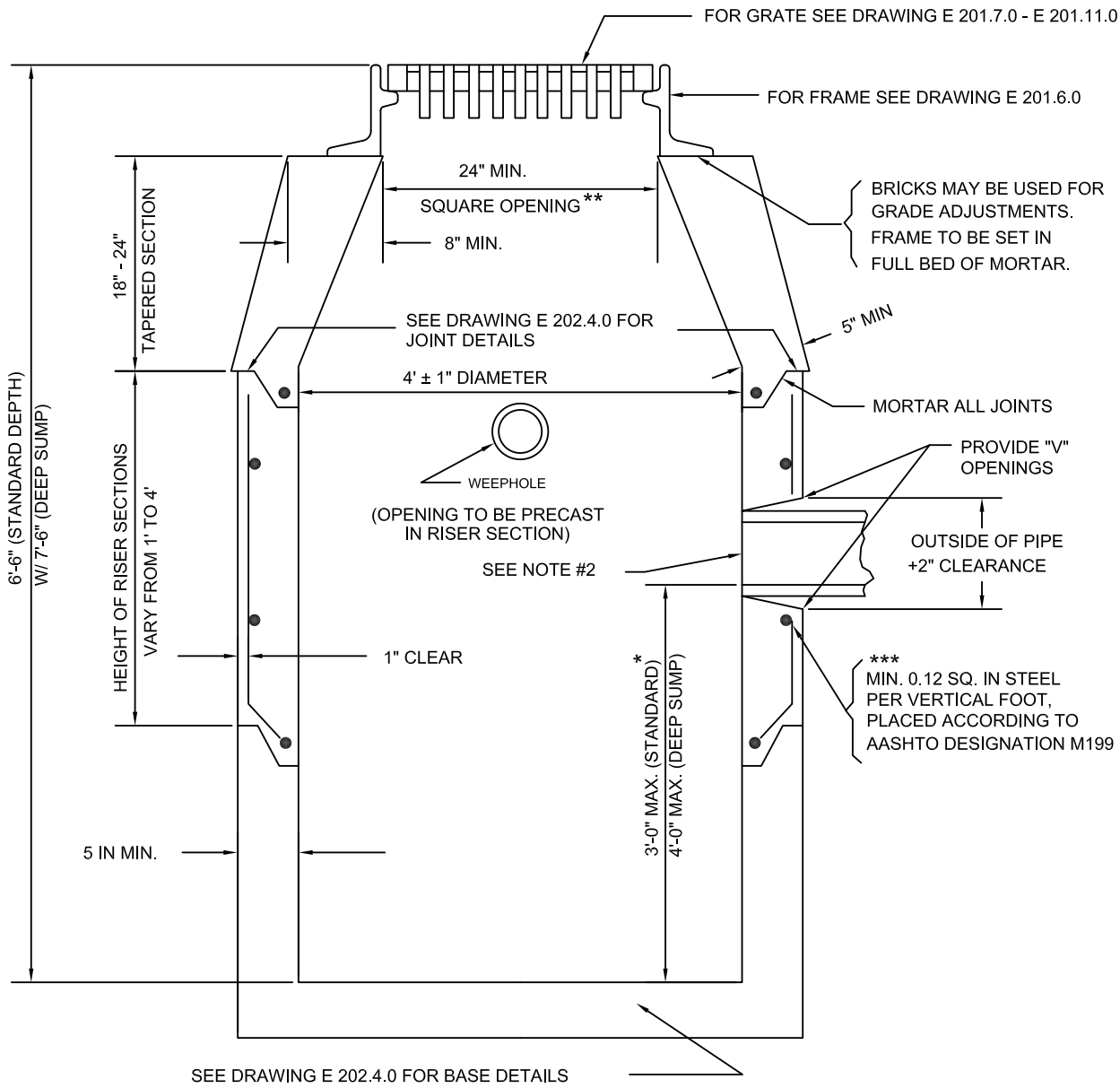

* MINIMUM DEPTH OF SUMP TO BE 2 FT

** WHEN A CURB INLET IS INSTALLED, THE OPENING IS TO BE 24"±1" X 27"±1"

*** REINFORCING STEEL BASED ON A WALL THICKNESS OF 5".

NOTES:

1. DETAILS NOT INDICATED ABOVE ARE TO BE SIMILAR TO THOSE SHOWN ON E 201.3.0
2. FACE OF PIPE FLUSH OR NOT TO PROJECT MORE THAN 4" FROM FACE OF WALL ALONG CENTERLINE OF PIPE.
3. FOR DESCRIPTION, MATERIALS AND CONSTRUCTION METHOD, SEE STANDARD SPECIFICATIONS.
4. ALL CONCRETE TO BE AIR ENTRAINED

massDOT Massachusetts Department of Transportation Highway Division
CONSTRUCTION STANDARDS

PRECAST CONCRETE CATCH BASIN

DATE OF ISSUE
MARCH 2012

DRAWING NUMBER
E 201.4.0

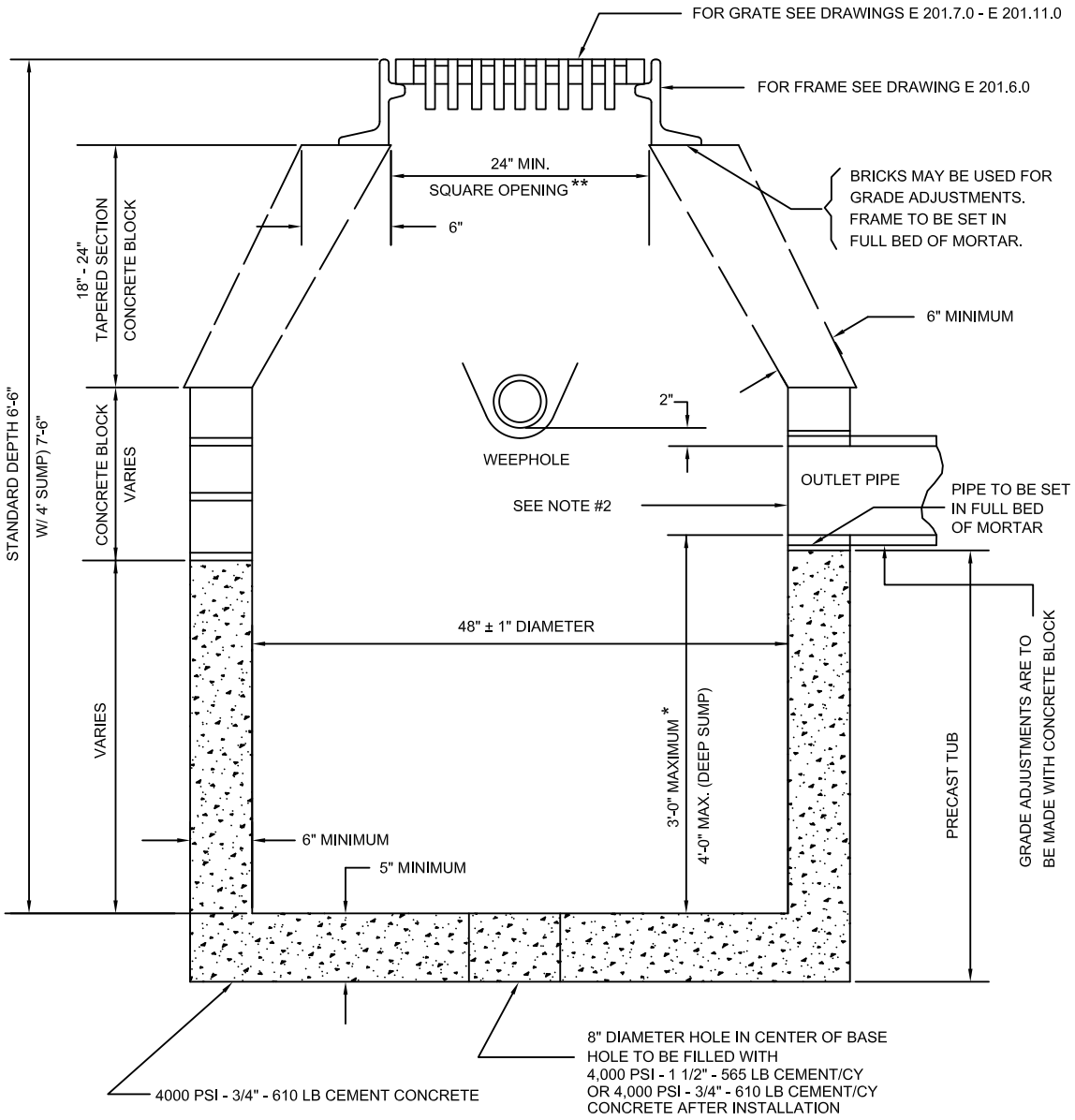

* MINIMUM DEPTH OF SUMP TO BE 2'

** WHEN A CURB INLET IS INSTALLED, THE OPENING IS TO BE 24"±1" X 27"±1"

NOTES:

1. DETAILS NOT INDICATED ABOVE ARE TO BE SIMILAR TO THOSE SHOWN ON DRAWING E 201.3.0
2. FACE OF PIPE FLUSH OR NOT TO PROJECT MORE THAN 4" FROM FACE OF WALL ALONG CENTERLINE OF PIPE.
3. FOR DESCRIPTION, MATERIALS AND CONSTRUCTION METHOD, SEE STANDARD SPECIFICATIONS.
4. ALL CONCRETE TO BE AIR ENTRAINED

massDOT Massachusetts Department of Transportation Highway Division
CONSTRUCTION STANDARDS

PRECAST CONCRETE CATCH BASIN TUB

DATE OF ISSUE
MARCH 2012

DRAWING NUMBER
E 201.5.0

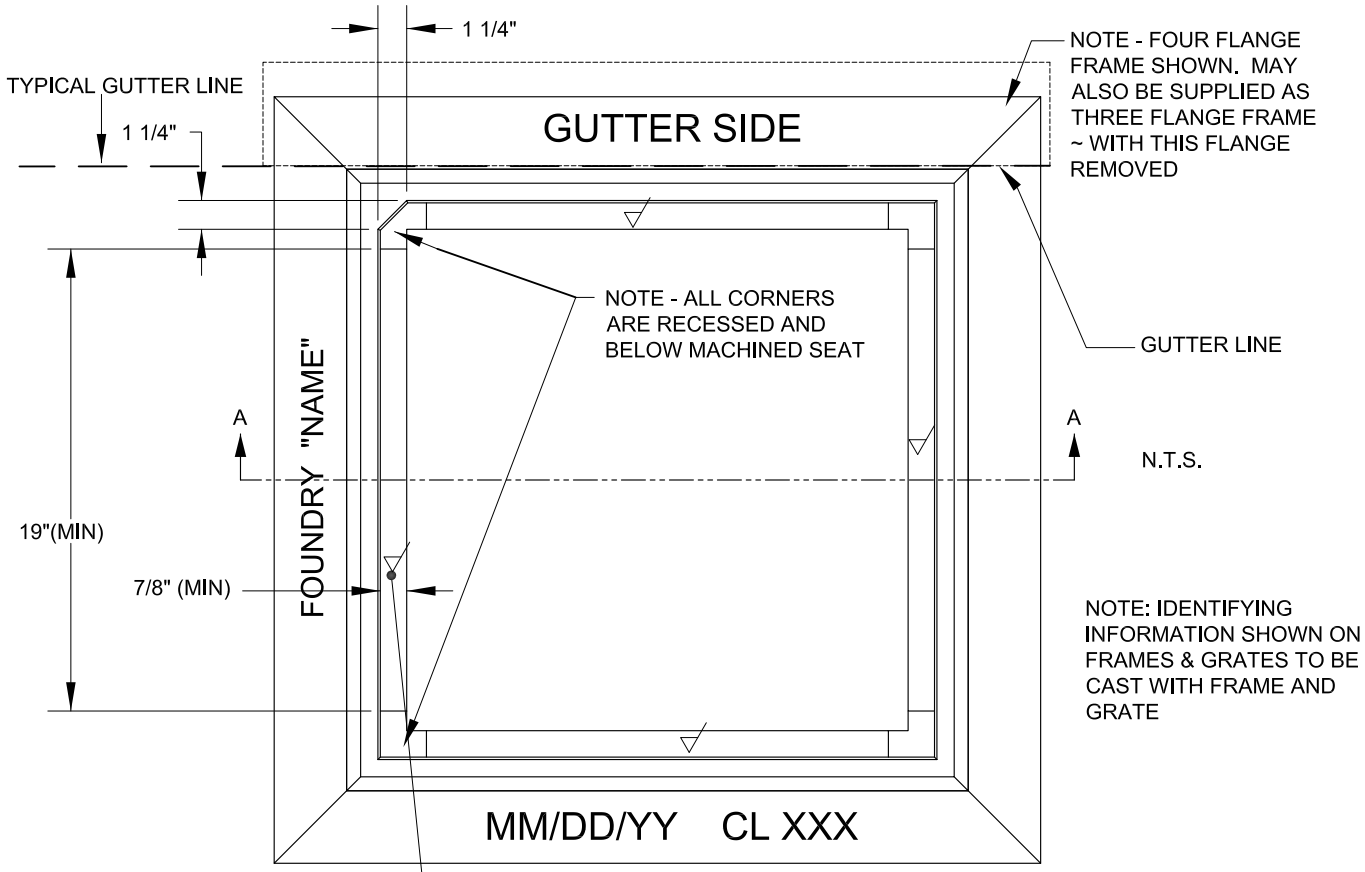

MACHINE TOLERANCES:

▽MACHINED SEATS (4) REQUIRED FLAT AND IN PLANE WITHIN .010" TOTAL INDICATOR READING

CLASSIFICATION:
ASTM A48 CLASS 30B GRAY CAST IRON
WITH NO BLACK ASPHALT COATING ALLOWED

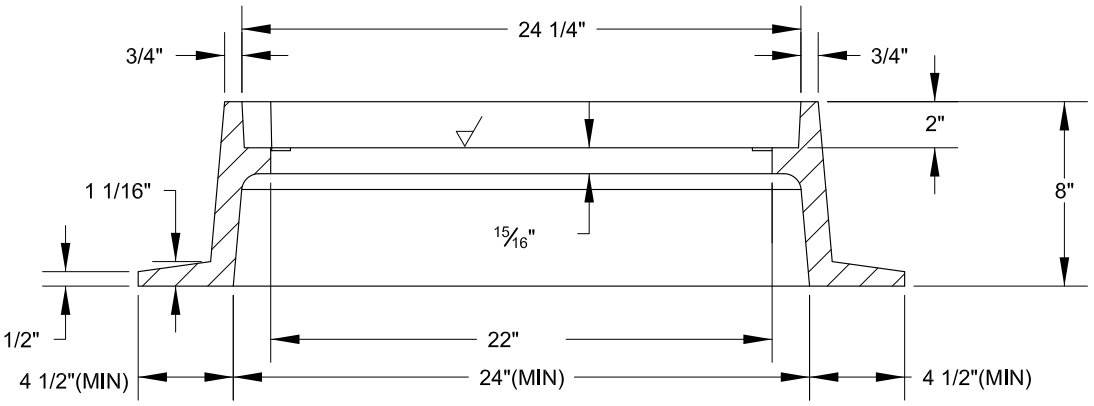

WEIGHTS:

3-FLANGE FRAME	240 LBS. MIN
4-FLANGE FRAME	270 LBS. MIN

AASHTO HS 20 LOAD RATED

CASTING TOLERANCES:
SHALL CONFORM TO AASHTO M306

massDOT Massachusetts Department of Transportation Highway Division
CONSTRUCTION STANDARDS

CATCH BASIN FRAME

DATE OF ISSUE
MARCH 2012

DRAWING NUMBER
E 201.6.0

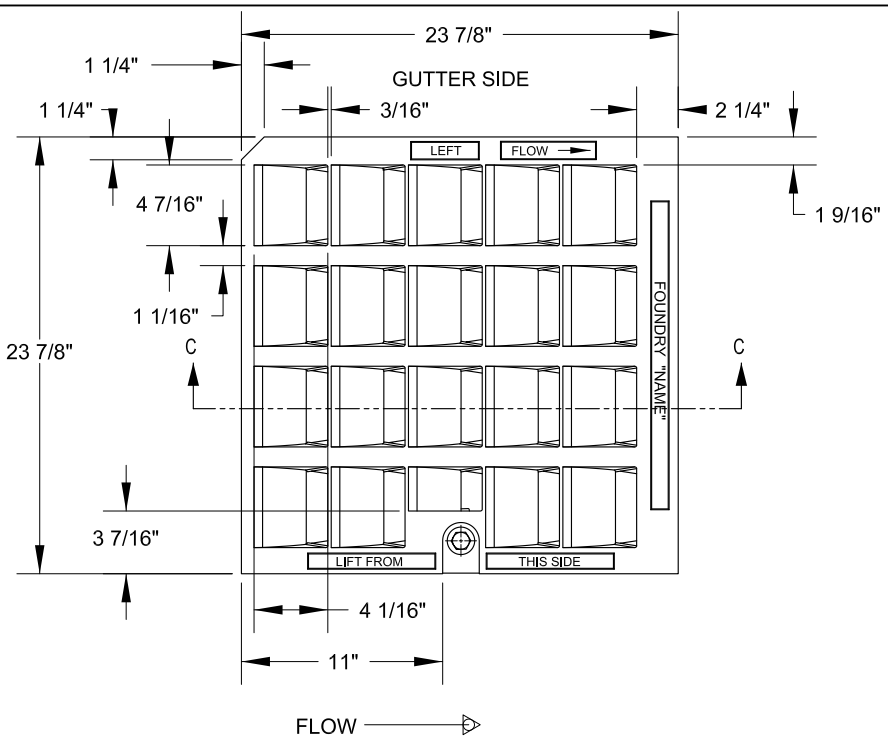

END VIEW

N.T.S.

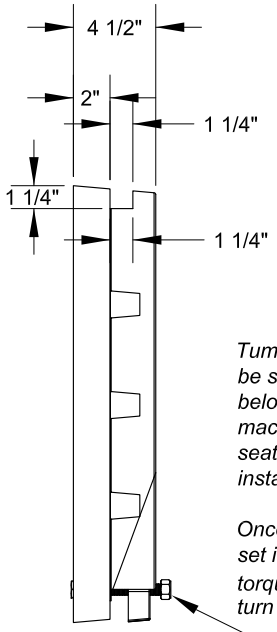

Tumbler should be set at 1 1/4" below machined grate seat for installation.

Once grate is set in frame, torque bolt ¼ turn past snug.

SECTION C-C

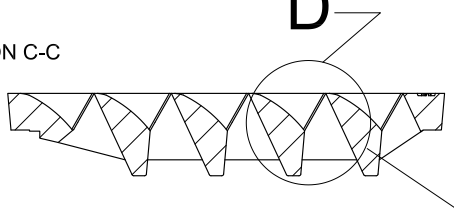

LOCK TUMBLER ASSEMBLY
(1) REQUIRED~CONSISTS OF:

5/8" x 5" ST. STL. BOLT
5/8" ST.STL. FLAT WASHER
CAST IRON TUMBLER
ST. STL. CAPTURE NUT

STAINLESS STEEL GRADE 304

CLASSIFICATION:
ASTM A48 CLASS 30B GRAY CAST IRON
WITH NO BLACK ASPHALT COATING ALLOWED

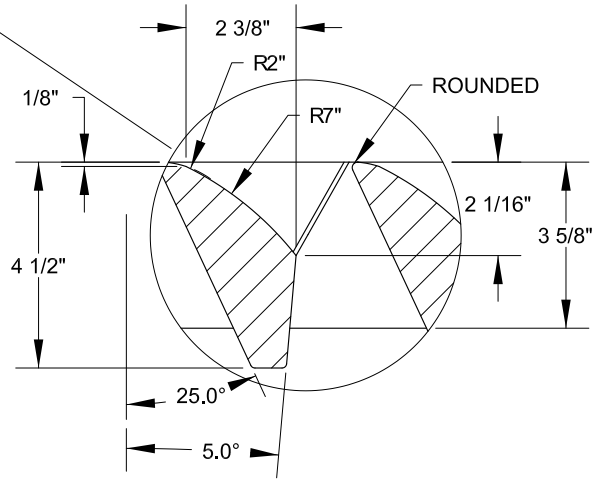

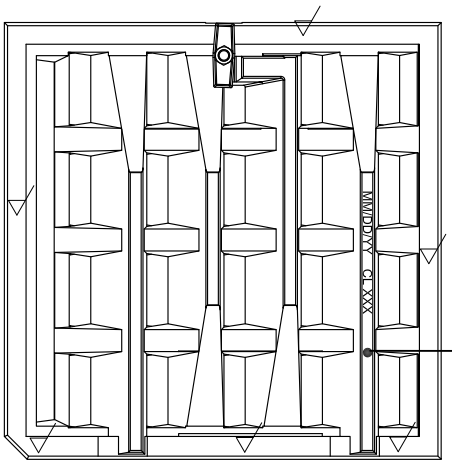

CAST BACK FACE WITH MOLD DATE AND PART NO.

CASTING TOLERANCES:
SHALL CONFORM TO AASHTO M306

WEIGHT: 265 LBS. MIN
AASHTO HS 20 PROOF LOAD

Machine tolerances:

Surfaces noted ▽ must be machined flat and in-plane within .010" Total Indicator Reading

NOTE: CASCADE GRATE ONLY TO BE USED ON FACILITIES WHERE BICYCLE TRAVEL IS LEGALLY ALLOWED.

NOTE: IDENTIFYING INFORMATION SHOWN ON FRAMES & GRATES TO BE CAST WITH FRAME AND GRATE

massDOT Massachusetts Department of Transportation Highway Division
CONSTRUCTION STANDARDS

HOOK LOCK CASCADE GRATE FLOW FROM LEFT

DATE OF ISSUE
MARCH 2012

DRAWING NUMBER
E 201.7.0

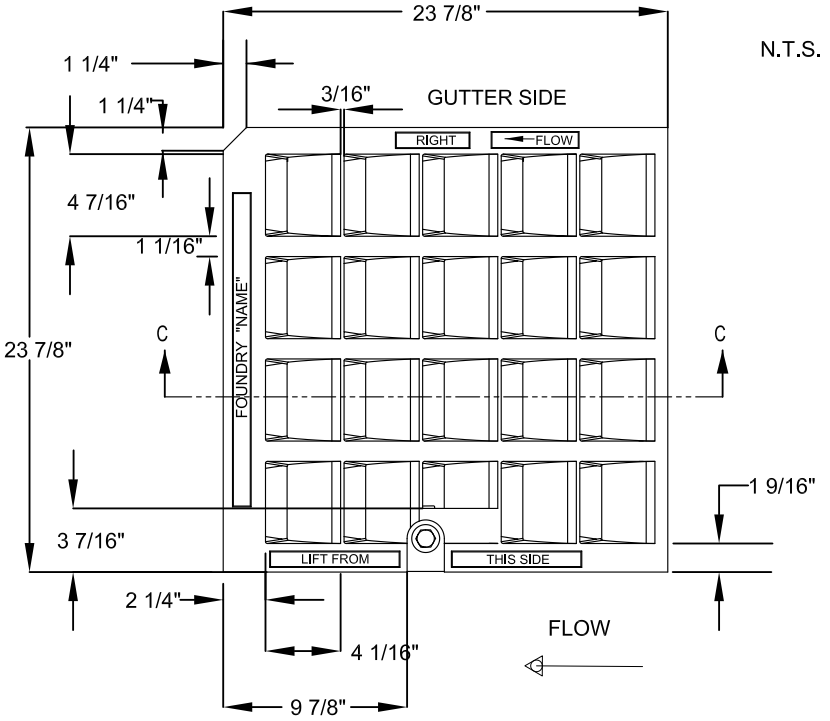

N.T.S.

END VIEW

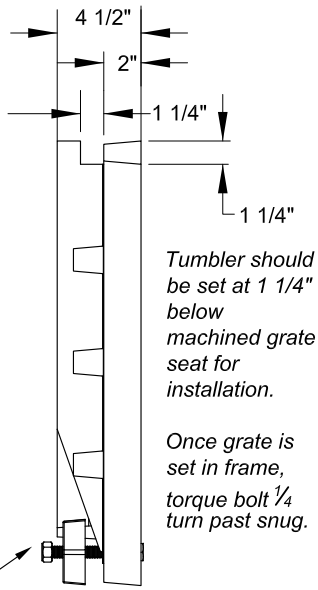

Tumbler should be set at 1 1/4" below machined grate seat for installation.

Once grate is set in frame, torque bolt ¼ turn past snug.

LOCK TUMBLER ASSEMBLY
(1) REQUIRED~CONSISTS OF:

5/8" x 5" ST. STL. BOLT
5/8" ST.STL. FLAT WASHER
CAST IRON TUMBLER
ST. STL. CAPTURE NUT

STAINLESS STEEL GRADE 304

SECTION C-C

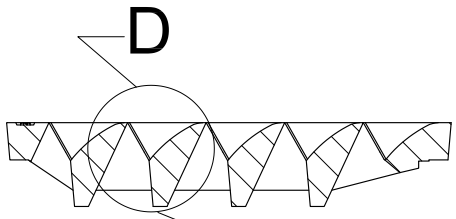

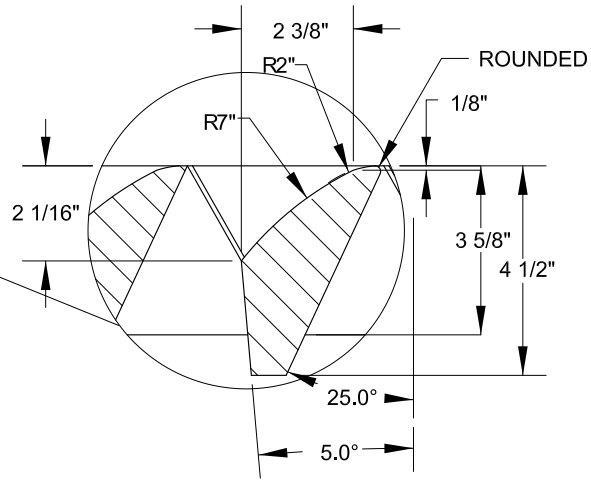

WEIGHT: 265 LBS. MIN
AASHTO HS 20 PROOF LOAD

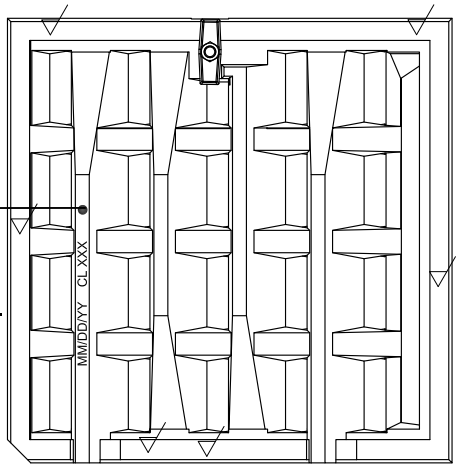

CAST BACK FACE WITH MOLD DATE AND PART NO.

CLASSIFICATION:
ASTM A48 CLASS 30B
GRAY CAST IRON
WITH NO BLACK ASPHALT COATING ALLOWED

CASTING TOLERANCES:
SHALL CONFORM TO AASHTO M306

Machine tolerances:

Surfaces noted ▽ must be machined flat and in-plane within .010" Total Indicator Reading

NOTE: CASCADE GRATE ONLY TO BE USED ON FACILITIES WHERE BICYCLE TRAVEL IS LEGALLY ALLOWED.

NOTE: IDENTIFYING INFORMATION SHOWN ON FRAMES & GRATES TO BE CAST WITH FRAME AND GRATE

massDOT Massachusetts Department of Transportation Highway Division
CONSTRUCTION STANDARDS

HOOK LOCK CASCADE GRATE FLOW FROM RIGHT

DATE OF ISSUE
MARCH 2012

DRAWING NUMBER
E 201.7.1

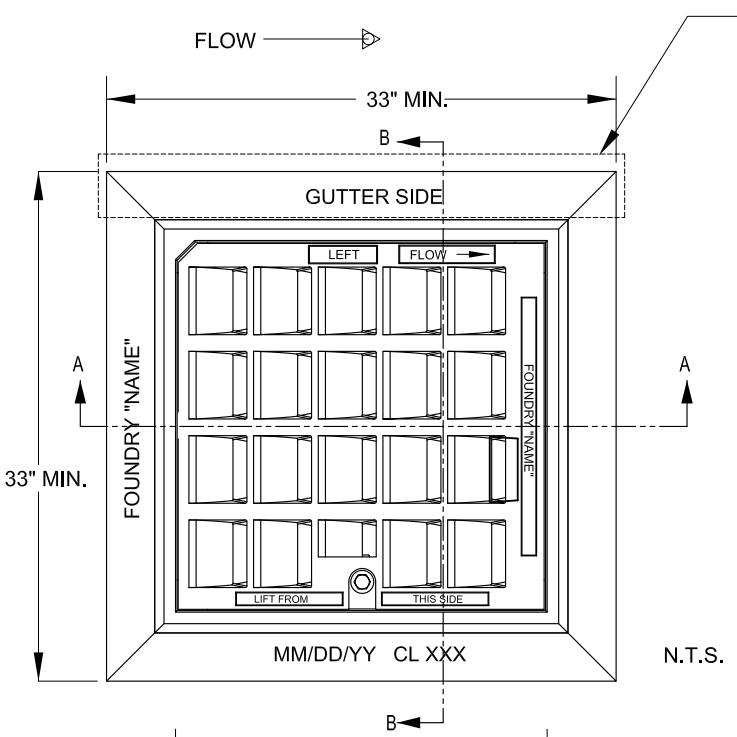

N.T.S.

FRAME MAY BE INSTALLED WITH THIS FLANGE REMOVED FOR CURB INLET. FOUR FLANGE IS SHOWN. ~ SEE DWG E 201.6.0 FOR MORE INFORMATION.

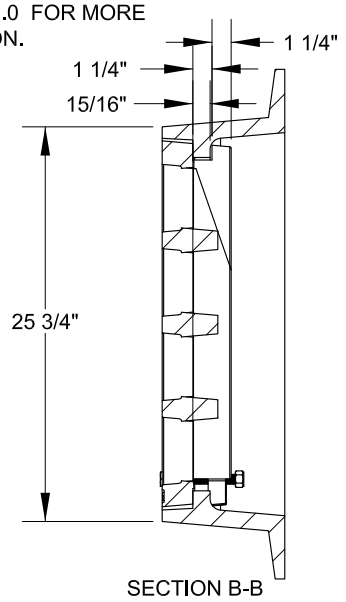

SECTION B-B

AASHTO HS 20 PROOF LOAD

SECTION A-A

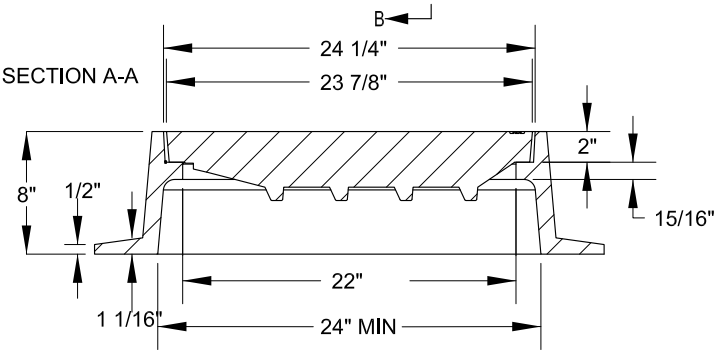

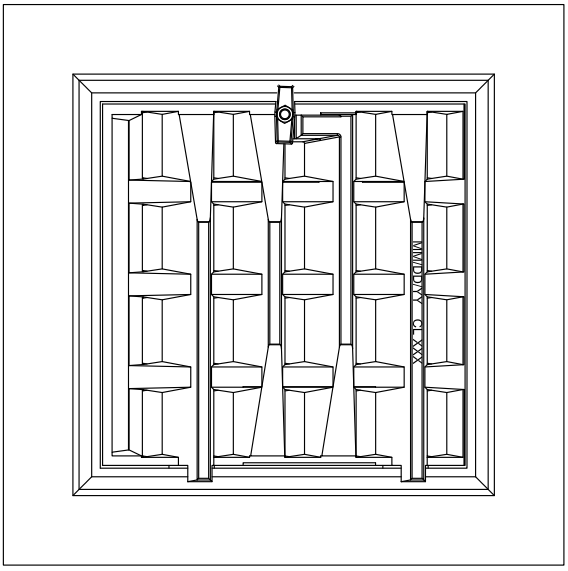

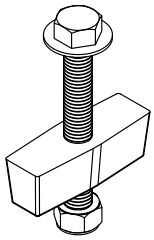

LOCK TUMBLER ASSEMBLY
(1) REQUIRED~CONSISTS OF:

5/8" x 5" ST. STL. BOLT
5/8" ST.STL. FLAT WASHER
CAST IRON TUMBLER
ST. STL. CAPTURE NUT

STAINLESS STEEL GRADE 304

CLASSIFICATION:
ASTM A48 CLASS 30B GRAY CAST IRON
WITH NO BLACK ASPHALT COATING ALLOWED

Tumbler should be set at 1 1/4" below machined grate seat for installation.

Once grate is set in frame, torque bolt ¼ turn past snug.

WEIGHTS:

3-FLANGE FRAME	240 LBS. MIN
4-FLANGE FRAME	270 LBS. MIN
B-1 GRATE	265 LBS. MIN

NOTE: SEAT SURFACES ON BOTH FRAME AND GRATE ARE MACHINED AND GRATE MUST NOT ROCK IN FRAME WHEN ASSEMBLED.

NOTE: IDENTIFYING INFORMATION SHOWN ON FRAMES & GRATES TO BE CAST WITH FRAME AND GRATE

CASTING TOLERANCES:
SHALL CONFORM TO AASHTO M306

massDOT Massachusetts Department of Transportation Highway Division
CONSTRUCTION STANDARDS

FRAME AND HOOK LOCK CASCADE GRATE – FLOW FROM LEFT ASSEMBLY DETAILS

DATE OF ISSUE
MARCH 2012

DRAWING NUMBER
E 201.9.0

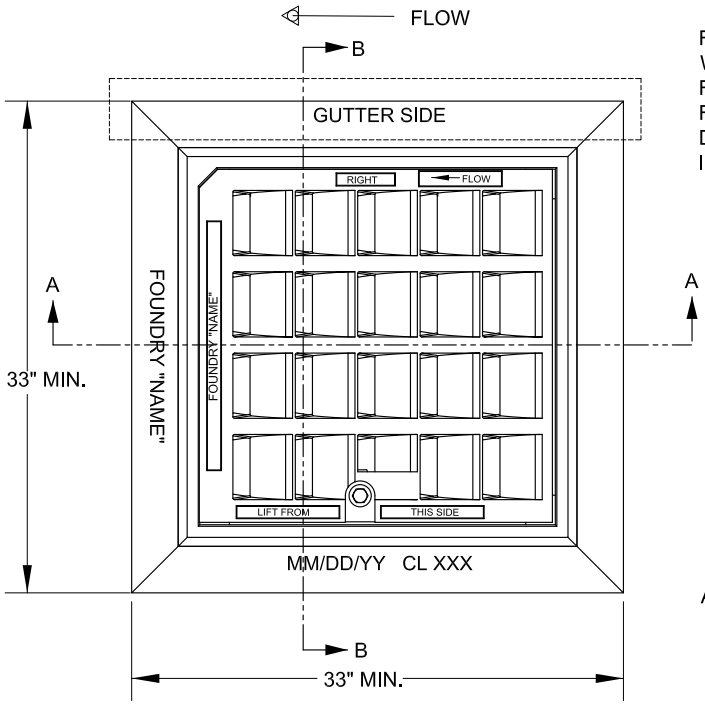

FRAME MAY BE INSTALLED WITH THIS FLANGE REMOVED FOR CURB INLET. FOUR FLANGE IS SHOWN. ~ SEE DWG E 201.6.0 FOR MORE INFORMATION.

CLASSIFICATION:
ASTM A48 CLASS 30B GRAY CAST IRON
WITH NO BLACK ASPHALT COATING ALLOWED

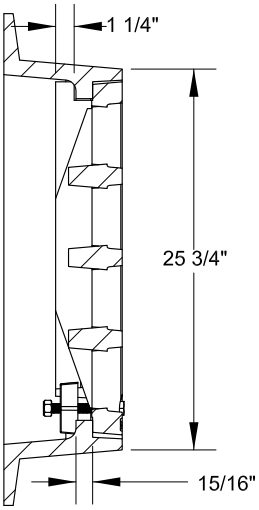

AASHTO HS 20 PROOF LOAD
N.T.S.

SECTION A-A

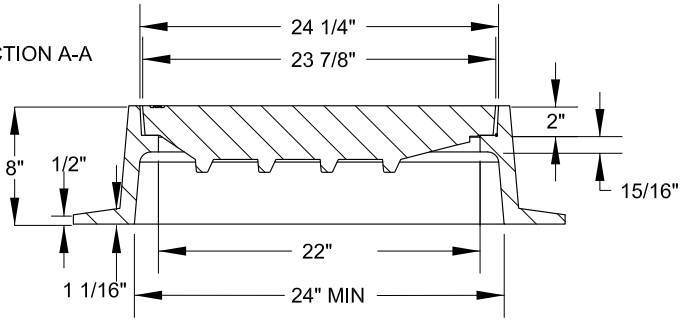

SECTION B-B

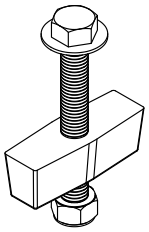

LOCK TUMBLER ASSEMBLY
(1) REQUIRED~CONSISTS OF:

5/8" x 5" ST. STL. BOLT
5/8" ST.STL. FLAT WASHER
CAST IRON TUMBLER
ST. STL. CAPTURE NUT

STAINLESS STEEL GRADE 304

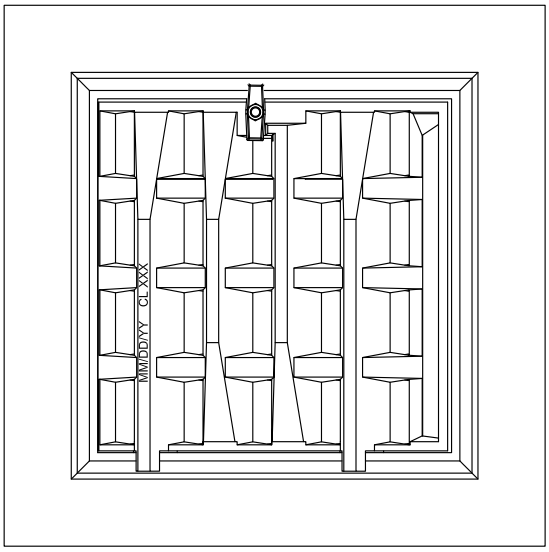

Tumbler should be set at 1 1/4" below machined grate seat for installation.

Once grate is set in frame, torque bolt ¼ turn past snug.

WEIGHTS:

3-FLANGE FRAME	240 LBS. MIN
4-FLANGE FRAME	270 LBS. MIN
B-2 GRATE	265 LBS. MIN

NOTE: SEAT SURFACES ON BOTH FRAME AND GRATE ARE MACHINED AND GRATE MUST NOT ROCK IN FRAME WHEN ASSEMBLED.

CASTING TOLERANCES:
SHALL CONFORM TO AASHTO M306

NOTE: IDENTIFYING INFORMATION SHOWN ON FRAMES & GRATES TO BE CAST WITH FRAME AND GRATE

massDOT Massachusetts Department of Transportation Highway Division
CONSTRUCTION STANDARDS

FRAME AND HOOK LOCK CASCADE GRATE – FLOW FROM RIGHT ASSEMBLY DETAILS

DATE OF ISSUE
MARCH 2012

DRAWING NUMBER
E 201.9.1

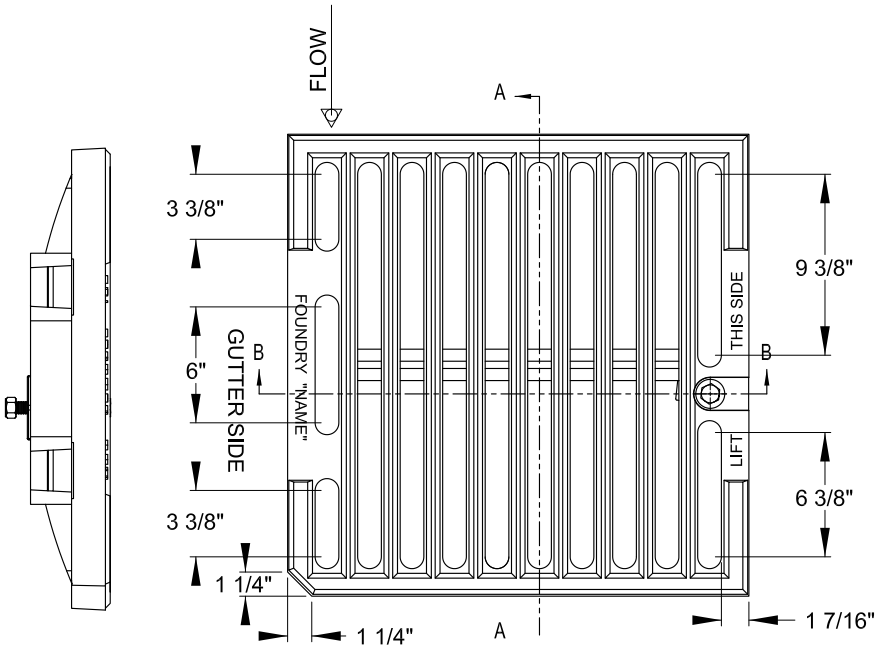

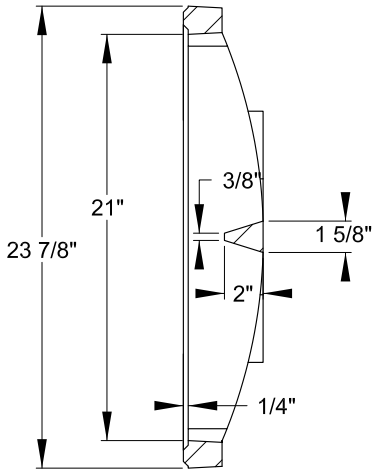

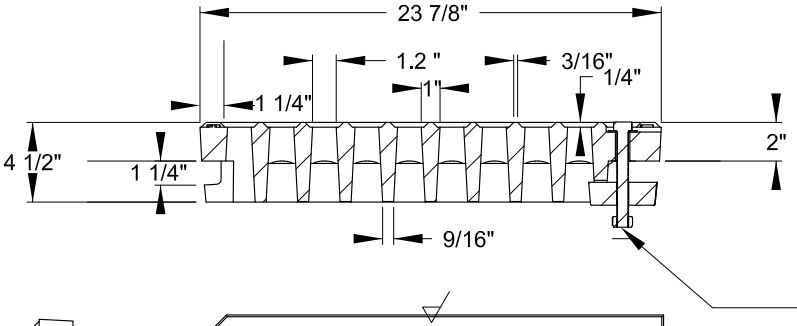

N.T.S.

WEIGHT: 205 LBS. (MIN)

NOTE: IDENTIFYING INFORMATION SHOWN ON FRAMES & GRATES TO BE CAST WITH FRAME AND GRATE

LOCK TUMBLER ASSEMBLY

(1) REQUIRED~CONSISTS OF:

5/8" x 5" ST. STL. BOLT
5/8" ST.STL. FLAT WASHER
CAST IRON TUMBLER
ST. STL. CAPTURE NUT
STAINLESS STEEL GRADE 304

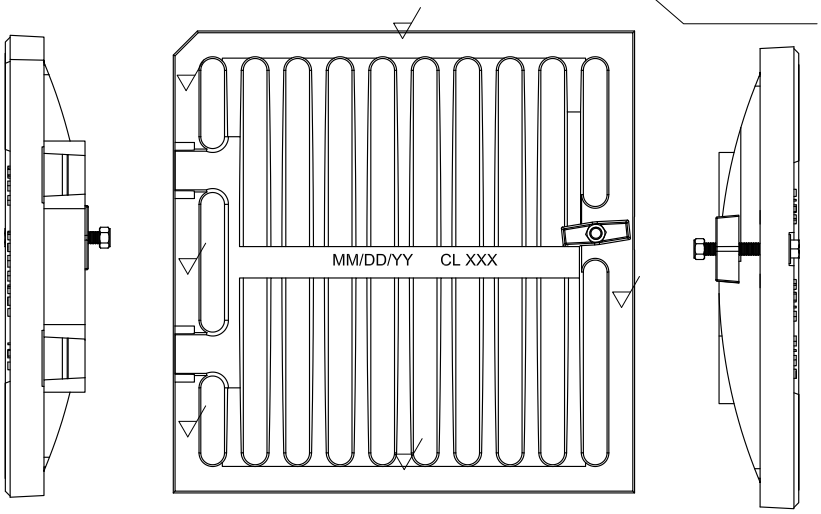

AASHTO HS 20 PROOF LOAD

CLASSIFICATION:
ASTM A48 CLASS 30B GRAY CAST IRON
WITH NO BLACK ASPHALT COATING ALLOWED

Machine tolerances:

Surfaces noted ▽ must be machined flat and in-plane within .010" Total Indicator Reading

CASTING TOLERANCES:
SHALL CONFORM TO AASHTO M306

Tumbler should be set at 1 1/4" below machined grate seat for installation.

Once grate is set in frame, torque bolt $\frac{1}{4}$ turn past snug.

NOTE: BAR GRATE NOT TO BE USED ON FACILITIES WHERE BICYCLE TRAVEL IS LEGALLY ALLOWED.

massDOT Massachusetts Department of Transportation Highway Division
CONSTRUCTION STANDARDS

HOOK LOCK BAR GRATE

DATE OF ISSUE
MARCH 2012

DRAWING NUMBER
E 201.10.0

FRAME MAY BE INSTALLED WITH THIS FLANGE REMOVED FOR CURB INLET. FOUR FLANGE IS SHOWN. SEE DWG 201.6.0 R2 FOR MORE INFORMATION.

NOTE: IDENTIFYING INFORMATION SHOWN ON FRAMES & GRATES TO BE CAST WITH FRAME AND GRATE

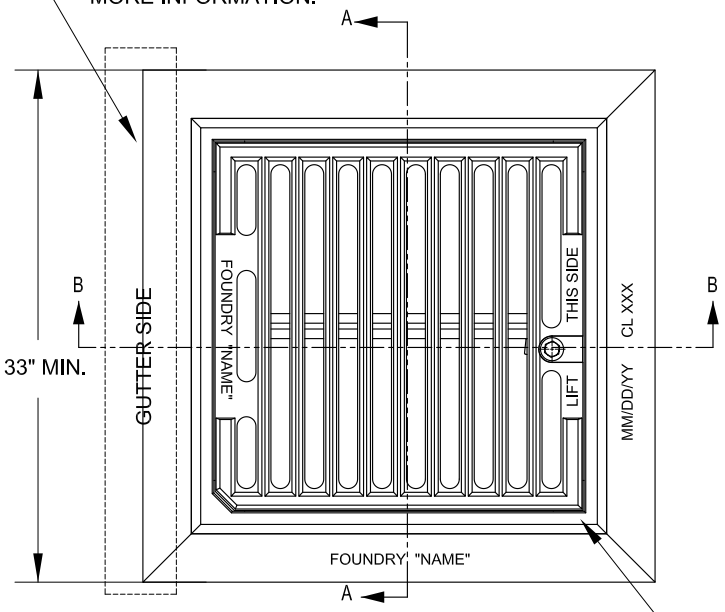

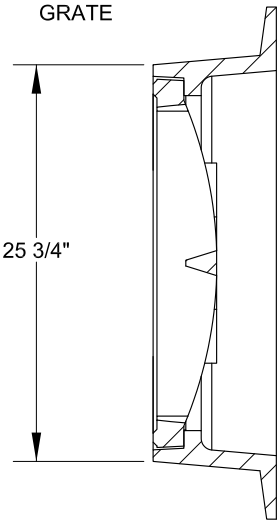

SEE DWG # FOR MORE INFORMATION ON GRATE GEOMETRY.

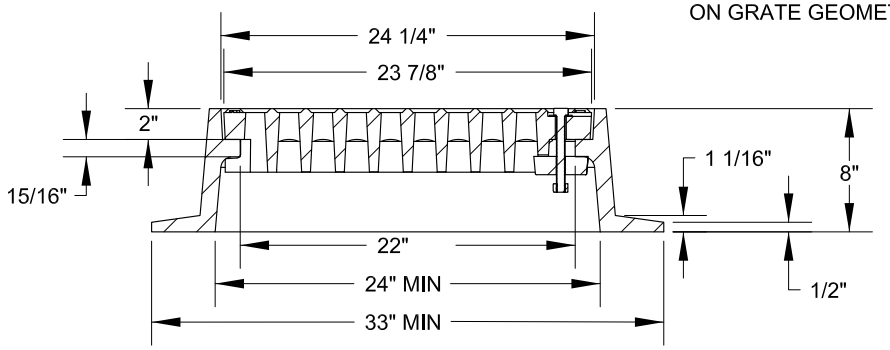

N.T.S.

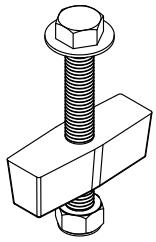

LOCK TUMBLER ASSEMBLY
(1) REQUIRED~CONSISTS OF:

5/8" x 5" ST. STL. BOLT
5/8" ST.STL. FLAT WASHER
CAST IRON TUMBLER
ST. STL. CAPTURE NUT

STAINLESS STEEL GRADE 304

AASHTO
HS 20
PROOF
LOAD

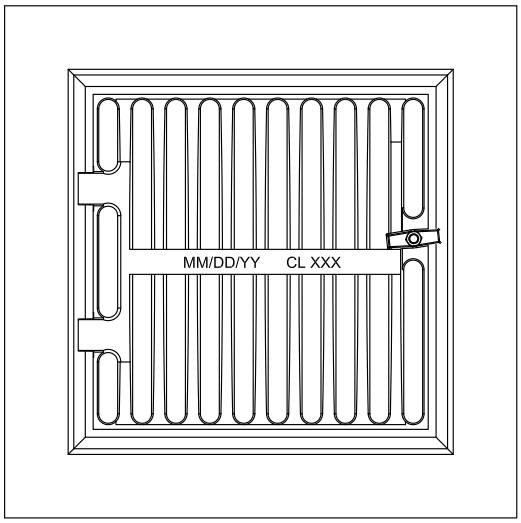

CASTING TOLERANCES:
SHALL CONFORM TO AAASHTO M306

CLASSIFICATION:
ASTM A48 CLASS 30B GRAY CAST IRON
WITH NO BLACK ASPHALT COATING ALLOWED

NOTE: SEAT SURFACES ON BOTH FRAME AND GRATE ARE MACHINED AND GRATE MUST NOT ROCK IN FRAME WHEN ASSEMBLED.

Tumbler should be set at 1 1/4" below machined grate seat for installation.

Once grate is set in frame, torque bolt $\frac{1}{4}$ turn past snug.

WEIGHTS:

3-FLANGE FRAME	240 LBS. MIN
4-FLANGE FRAME	270 LBS. MIN
A-4 GRATE	205 LBS. MIN

massDOT Massachusetts Department of Transportation Highway Division
CONSTRUCTION STANDARDS

FRAME AND HOOK LOCK BAR GRATE–FRAME ASSEMBLY DETAILS

DATE OF ISSUE
MARCH 2012

DRAWING NUMBER
E 201.10.1

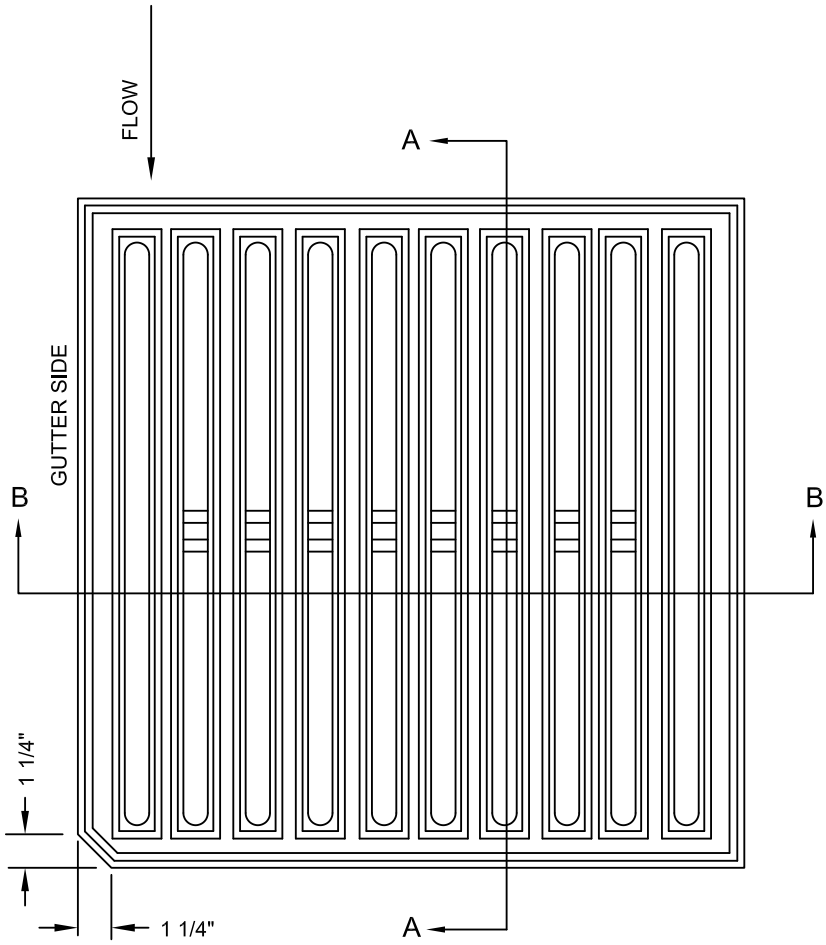

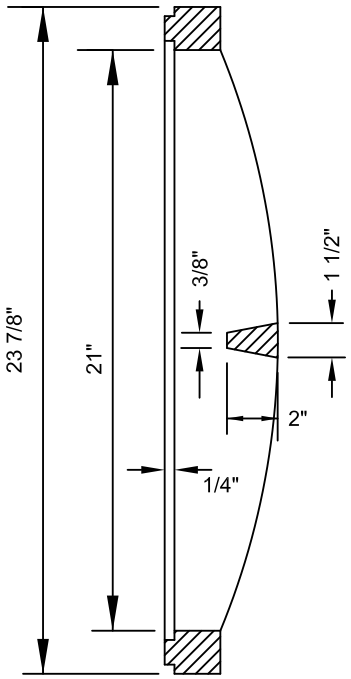

SECTION A-A

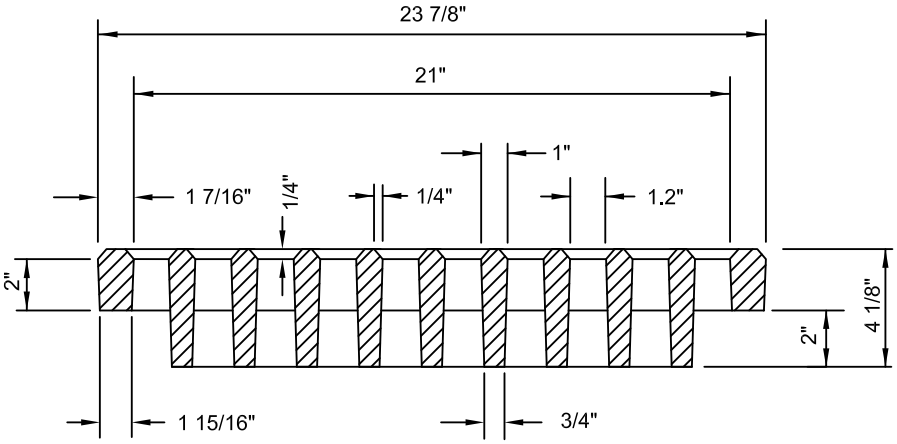

SECTION B-B

NOTES:

1. MATERIAL-CAST IRON; SEE STANDARD SPECIFICATIONS
2. MINIMUM MASS - 210 LBS.

massDOT Massachusetts Department of Transportation Highway Division

CONSTRUCTION STANDARDS

DROP INLET GRATE

DATE OF ISSUE
MARCH 2012

DRAWING NUMBER
E 201.11.0

massDOT
Massachusetts Department of Transportation
Highway Division

CONSTRUCTION STANDARDS

CATCH BASIN HOOD

DIMENSIONS (in.)	A	B	C	D	E	F	G	H
8" and 10" PIPE	15	15	8	9	2	7/8	1 7/8	14
12" and 15" PIPE	18	18	10	11 1/4	2	1	1 7/8	14

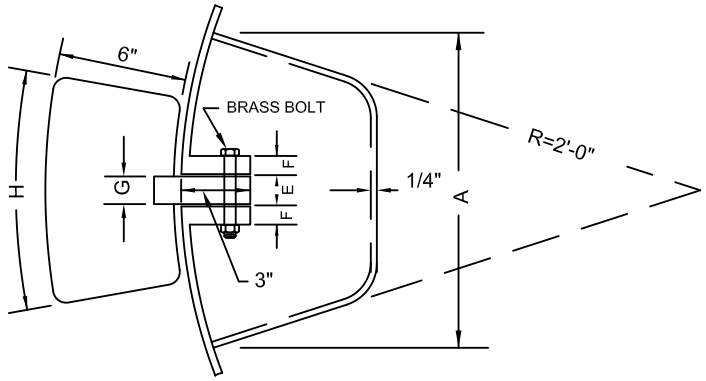

TOP

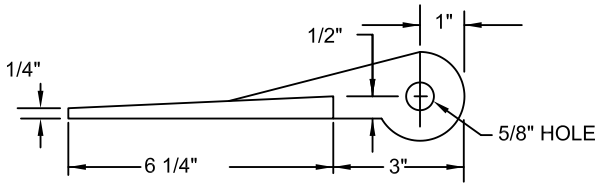

DETAIL "A" HINGE

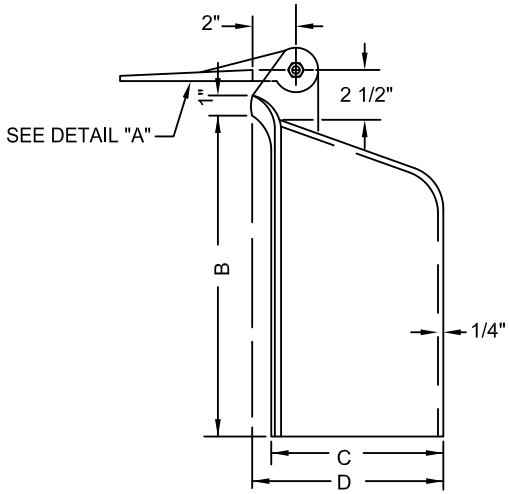

SIDE

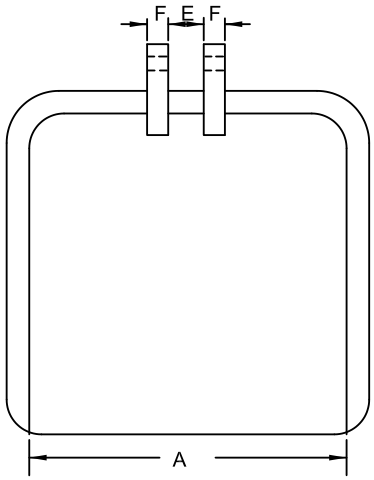

BACK

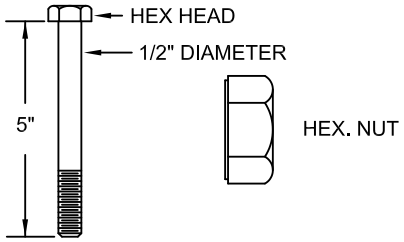

BRASS BOLT & NUT

NOTE:

1. HOODS TO BE GRAY CAST IRON AASHTO CLASS #30

DATE OF ISSUE
MARCH 2012

DRAWING NUMBER
E 201.12.0

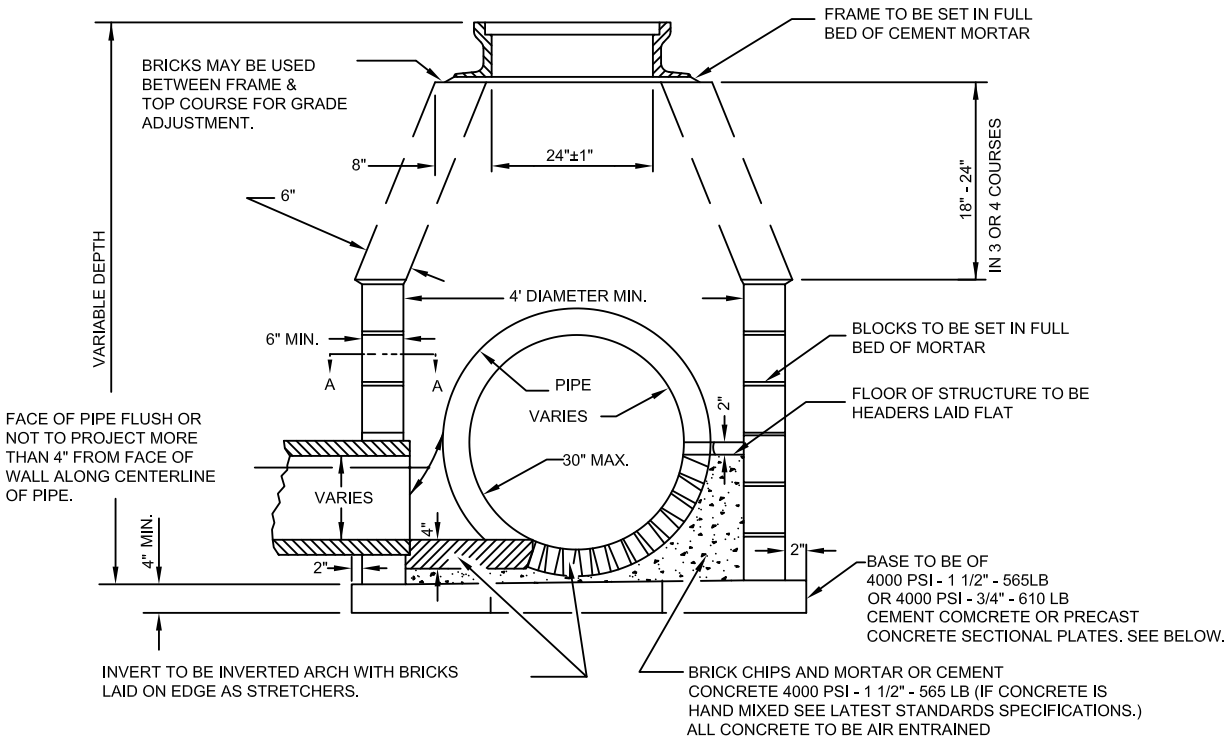

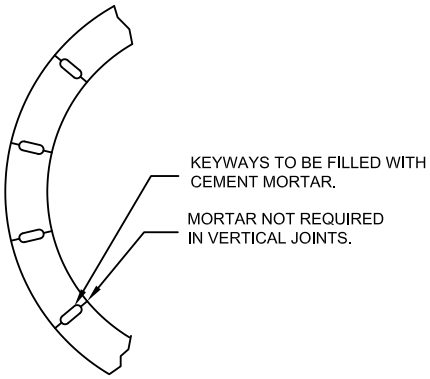

SECTION A-A

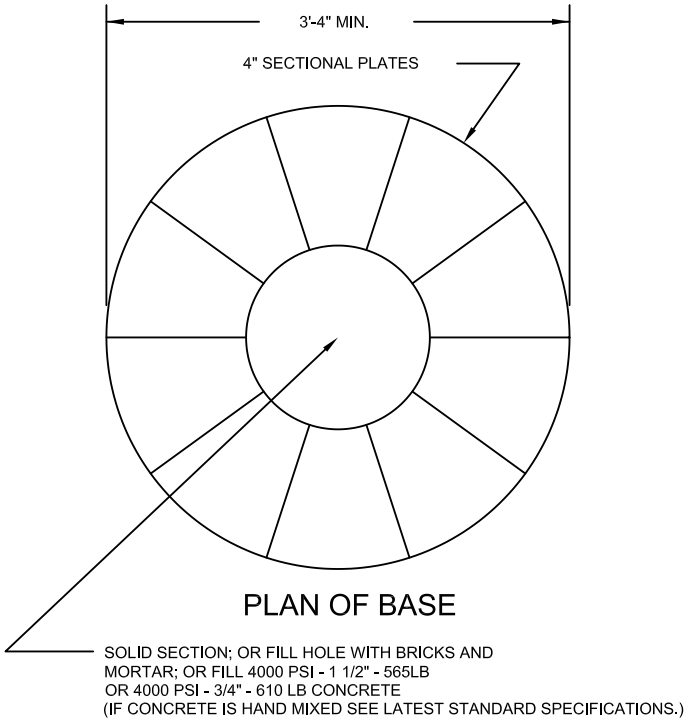

PLAN OF BASE

NOTE:

1. DESIGN SHOWN IS FOR MANHOLE OF 9' OR LESS AND PIPE DIAMETER OF 30" OR LESS.
2. STANDARD MANHOLE DEPTH TO BE 6'-6" OR LESS

massDOT Massachusetts Department of Transportation Highway Division

CONSTRUCTION STANDARDS

CONCRETE BLOCK MANHOLE

MANHOLES 9' OR LESS IN DEPTH

DATE OF ISSUE
MARCH 2012

DRAWING NUMBER
E 202.2.0

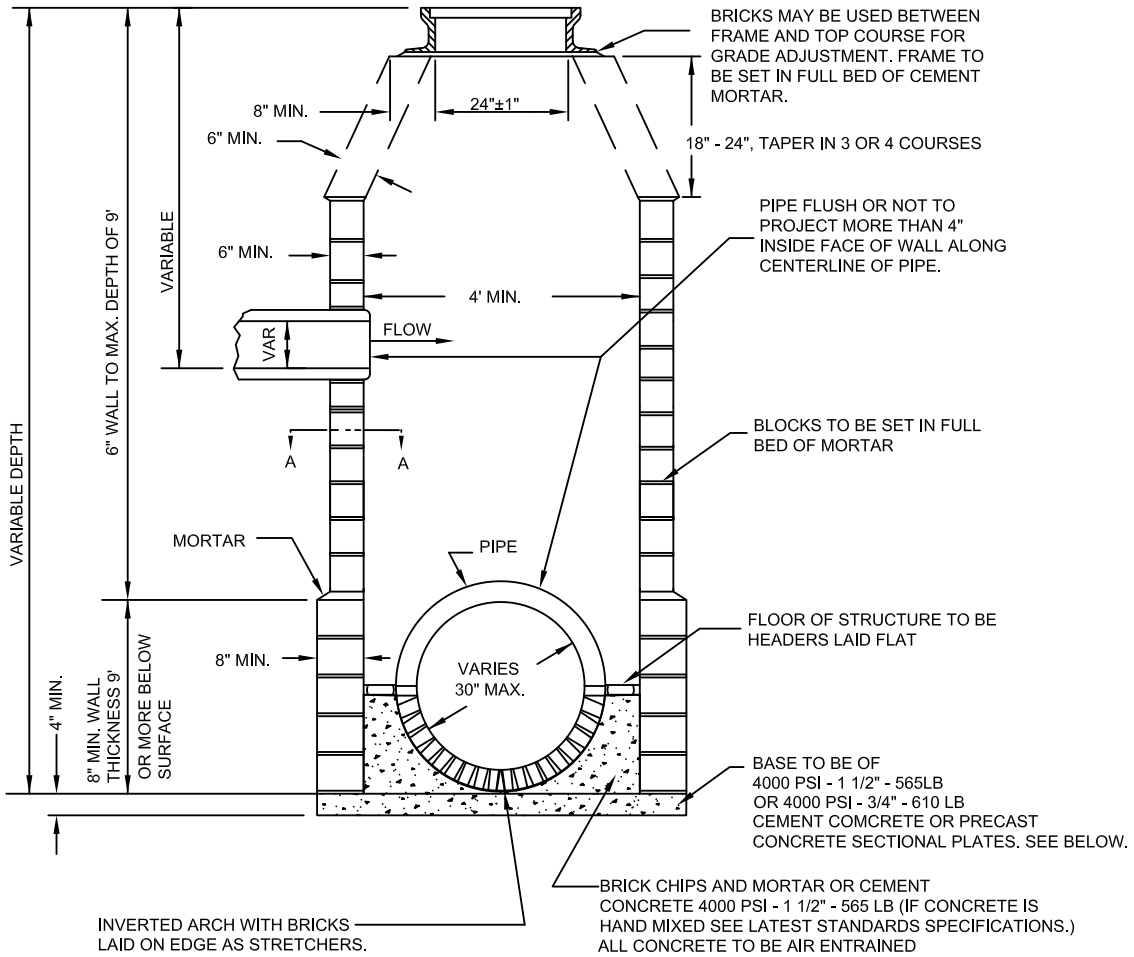

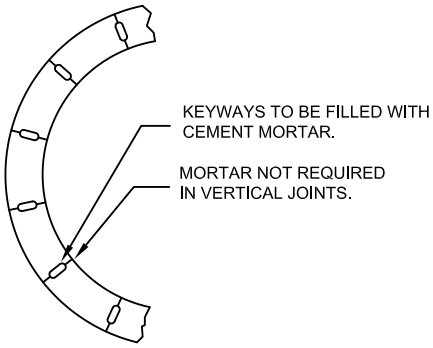

SECTION A-A

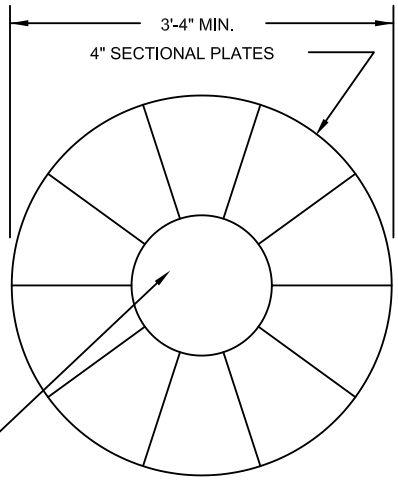

PLAN OF BASE

SOLID SECTION; OR FILL HOLE WITH BRICKS AND MORTAR; OR FILL 4000 PSI - 1 1/2" - 565LB OR 4000 PSI - 3/4" - 610 LB CONCRETE (IF CONCRETE IS HAND MIXED SEE LATEST STANDARD SPECIFICATIONS.)

NOTE:

1. MANHOLE DESIGN IS FOR PIPE DIAMETER OF 30" OR LESS

massDOT Massachusetts Department of Transportation Highway Division

CONSTRUCTION STANDARDS

CONCRETE BLOCK MANHOLE

MANHOLES OVER 9' IN DEPTH

DATE OF ISSUE
MARCH 2012

DRAWING NUMBER
E 202.3.0

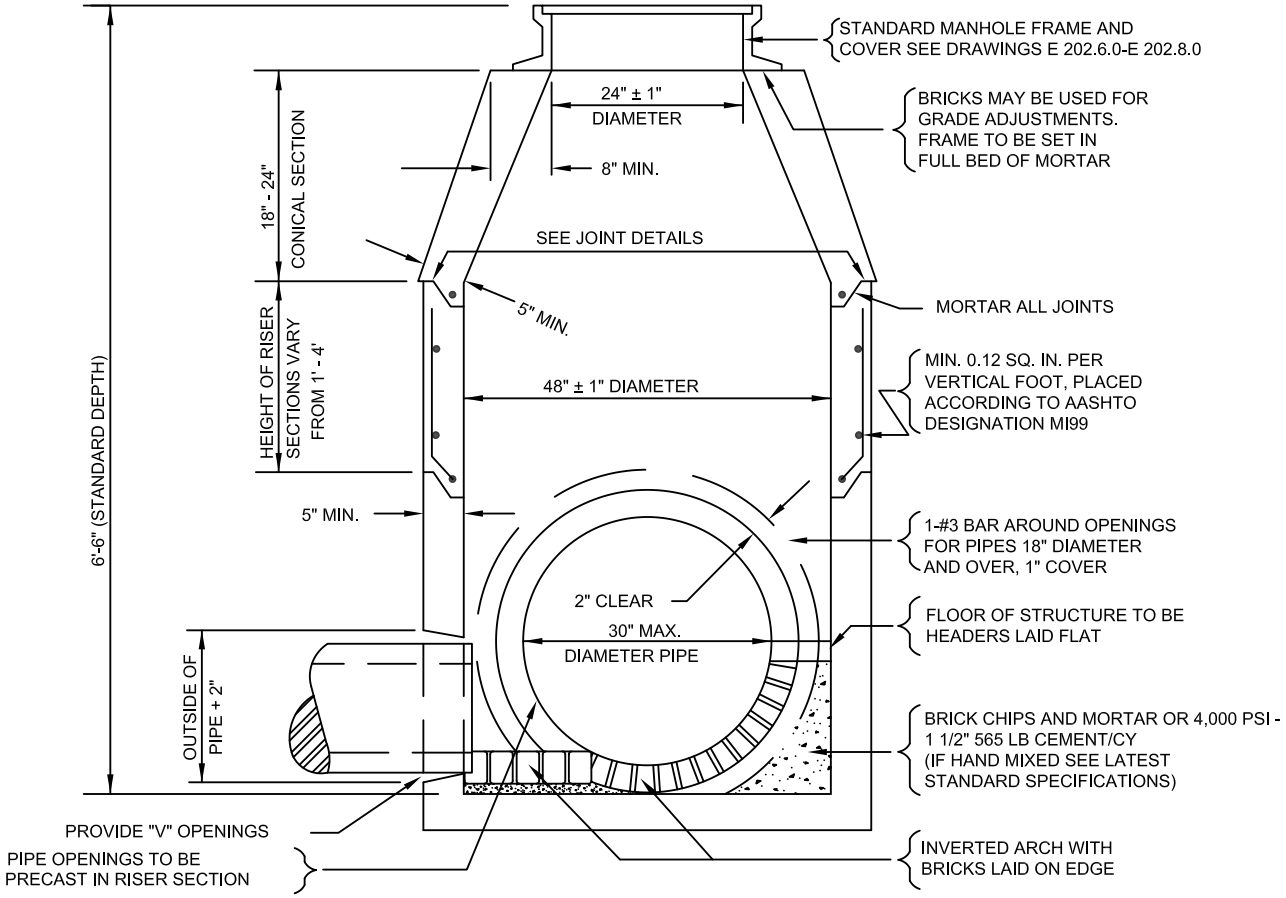

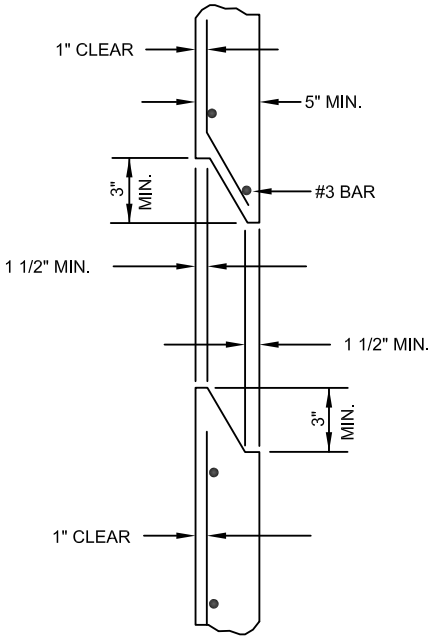

JOINT DETAILS

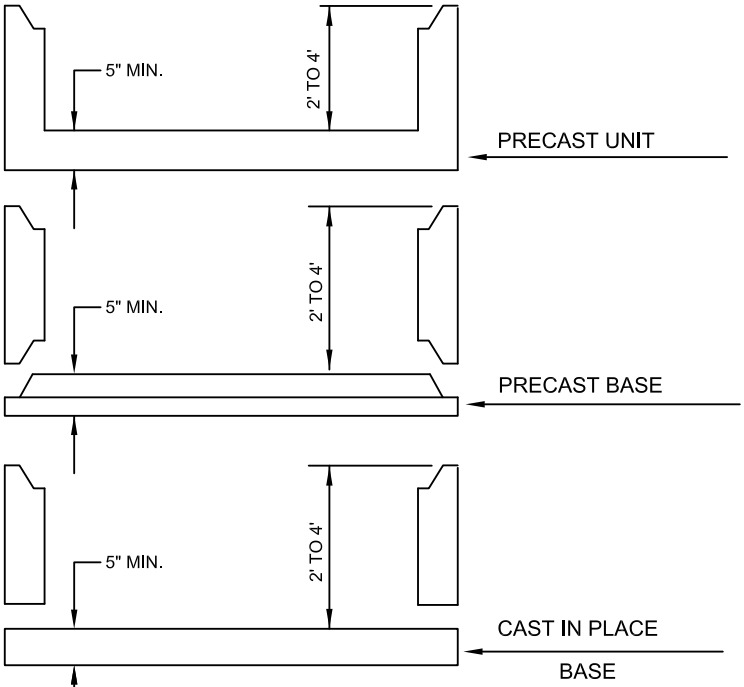

BASE DETAILS

NOTE:

1. FOR DESCRIPTIONS, MATERIALS AND CONSTRUCTION METHODS, SEE LATEST STANDARD SPECIFICATIONS.

massDOT Massachusetts Department of Transportation Highway Division

CONSTRUCTION STANDARDS

PRECAST CONCRETE MANHOLES 9' OR LESS IN DEPTH

DATE OF ISSUE MARCH 2012

DRAWING NUMBER **E 202.4.0**

massDOT
Massachusetts Department of Transportation
Highway Division

CONSTRUCTION STANDARDS

SPECIAL MANHOLES FOR 36" TO 84" DIAMETER R.C. PIPE

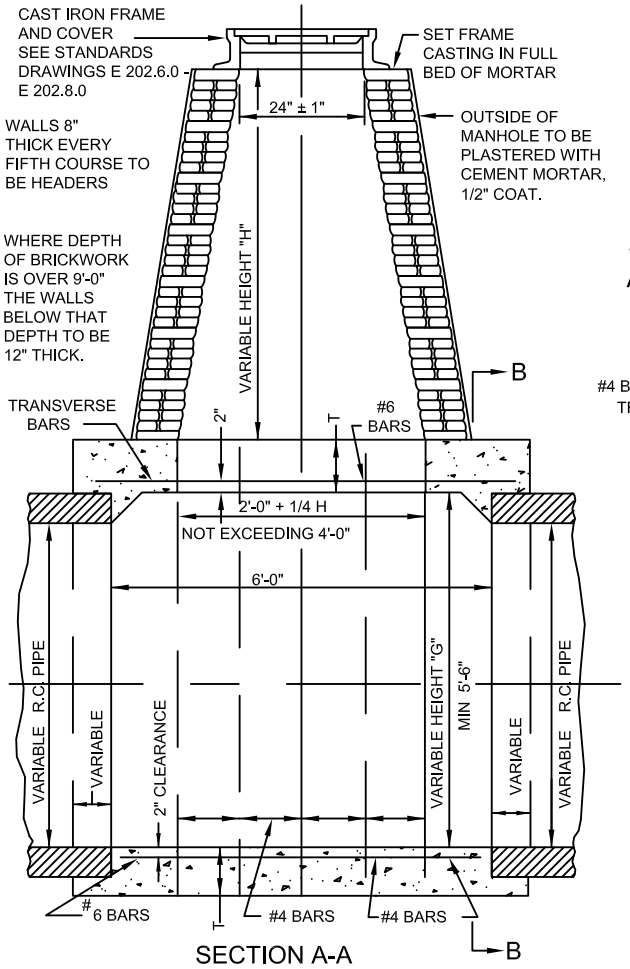

SECTION A-A

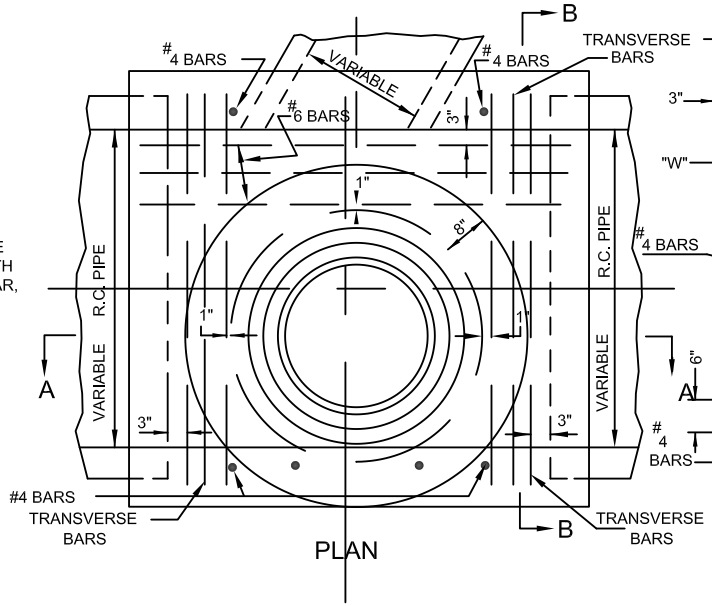

PLAN

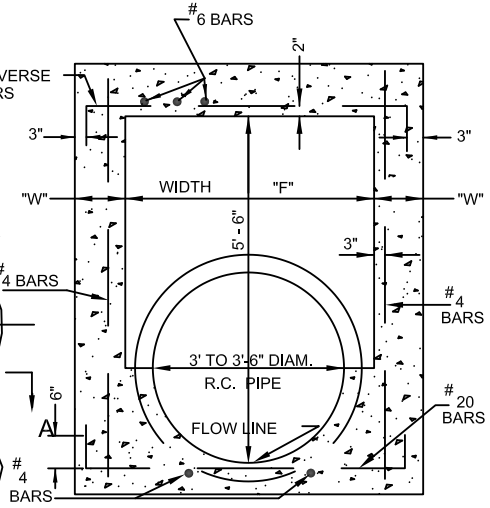

36" TO 42" DIAM. R.C. PIPE
SECTION B-B

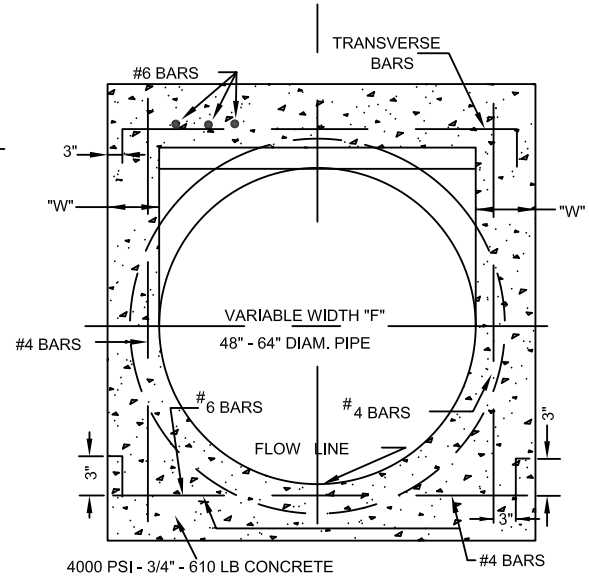

48" TO 84" DIAM. R.C. PIPE
SECTION B-B

TOP AND BOTTOM SLABS & SIDEWALLS TO BE CLASS "B" CONC.

SIZE OF PIPE	WIDTH "F"	HEIGHT "G"	HEIGHT "H"					
			8.0'-15.9'		16.0'-23.9'		24.0'&UP	
			T	W	T	W	T	W
36"	4'-0"	5'-6"	8"	10"	8"	12"	9"	12"
42"	4'-0"	5'-6"	8"	10"	8"	12"	9"	12"
48"	4'-0"	5'-6"	8"	10"	8"	12"	9"	12"
54"	4'-6"	5'-6"	8"	10"	8"	12"	10"	12"
60"	5'-0"	5'-6"	8"	10"	9"	12"	11"	12"
72"	6'-0"	6'-0"	9"	10"	10"	12"	12"	12"
84"	7'-0"	7'-0"	10"	10"	11"	12"	13"	12"

SIZE NUMBER AND SPACING OF BARS.

T	TOP SLAB		BOTTOM SLAB		SIDEWALLS
	TRANS. BARS	LONG BARS	TRANS. #6 BARS	LONG # 4 BARS	VERTICAL #4 BARS
8"	6-#7	3-#6	6 1/2" OC	24" OC	12" OC
9"	6-#7	3-#6	5 1/2" OC	DO	DO
10"	6-#8	3-#6	5" OC	DO	DO
11"	6-#8	3-#6	4 1/2" OC	DO	DO
12"	6-#9	3-#6	4" OC	DO	DO
13"	6-#10	3-#6	4" OC	DO	DO

DATE OF ISSUE
MARCH 2012

DRAWING NUMBER
E 202.5.0

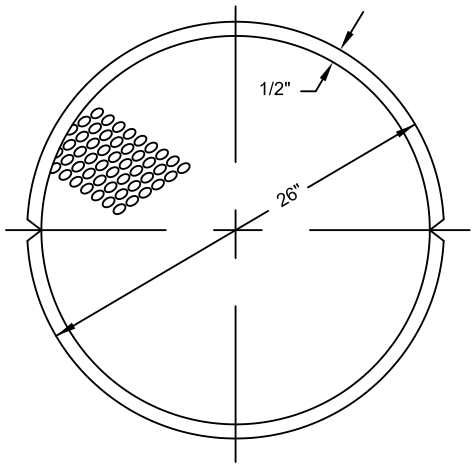

STANDARD COVER

FOR COVER DETAILS SEE DRAWING E 202.8.0

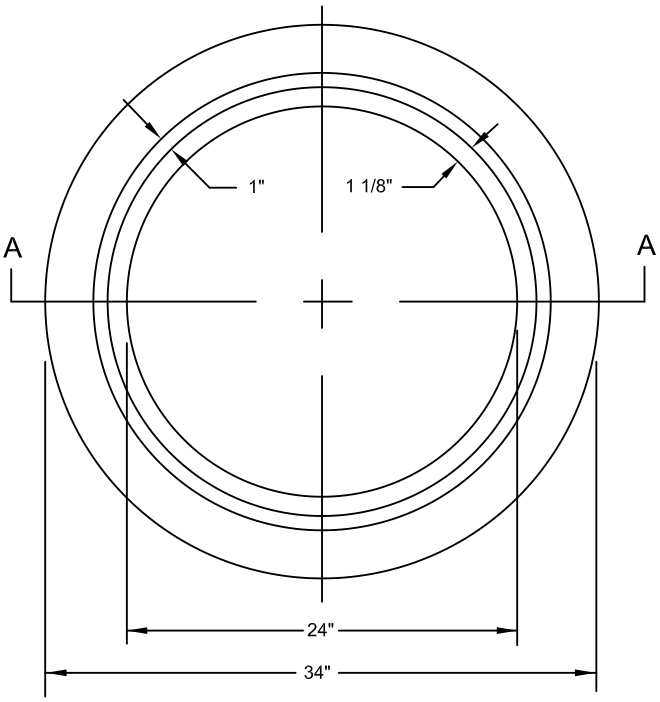

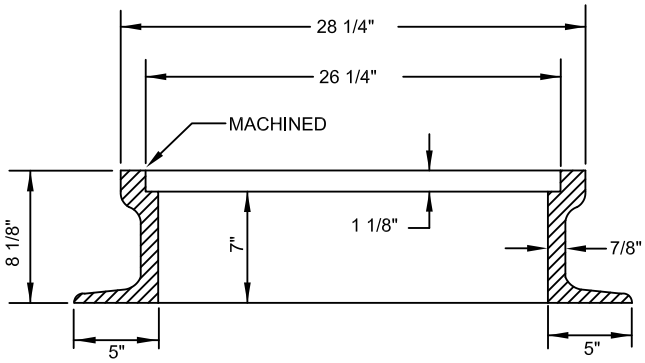

TYPE - A FRAME

NOTES:

1. MINIMUM MASS - 265 LBS.
2. MATERIAL - CAST IRON

massDOT Massachusetts Department of Transportation Highway Division

CONSTRUCTION STANDARDS

MANHOLE FRAME AND COVER – A FRAME

DATE OF ISSUE
MARCH 2012

DRAWING NUMBER
E 202.6.0R

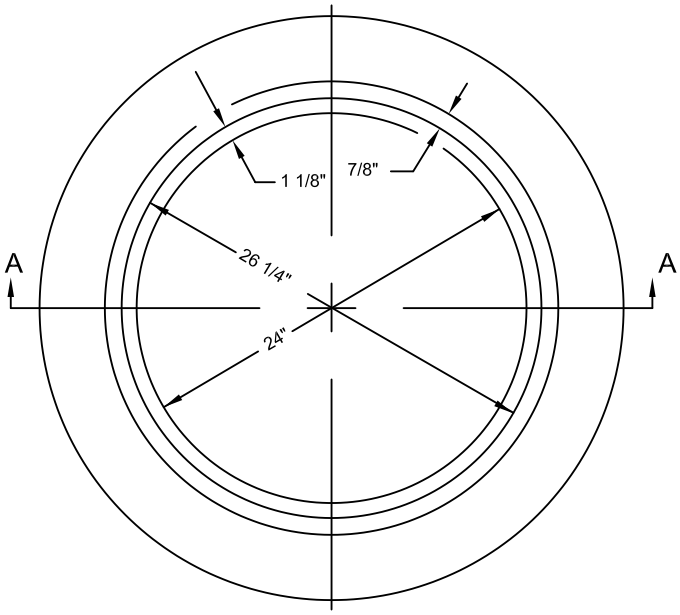

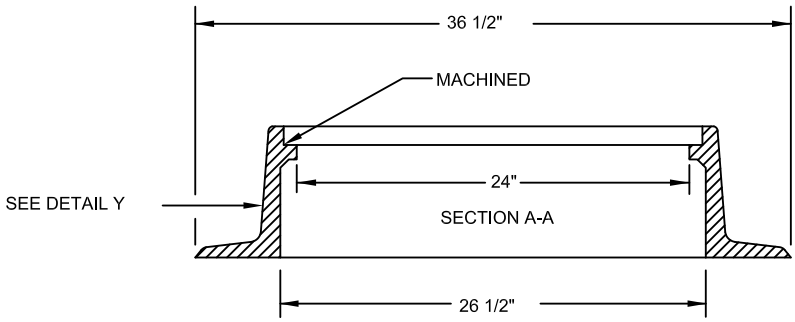

TYPE - B FRAME

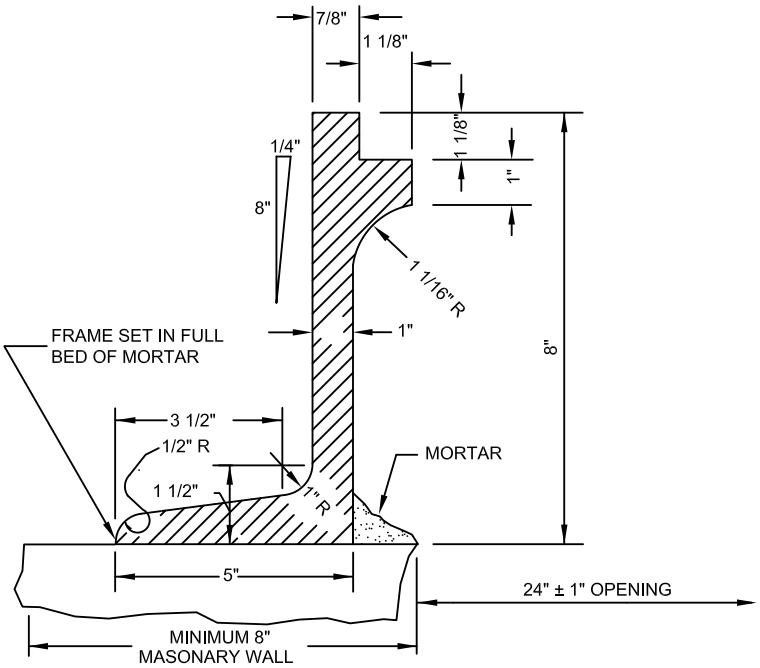

DETAIL Y

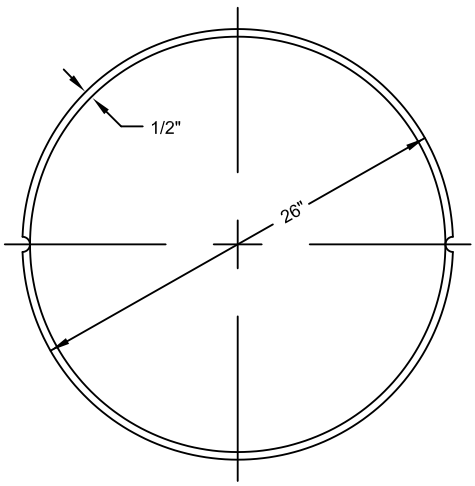

STANDARD COVER

FOR COVER DETAIL, SEE DRAWING E 202.8.0

NOTES:

1. MINIMUM FRAME MASS 265 LBS.
2. MATERIAL - CAST IRON

massDOT Massachusetts Department of Transportation Highway Division

CONSTRUCTION STANDARDS

MANHOLE FRAME AND COVER– B FRAME

DATE OF ISSUE
MARCH 2012

DRAWING NUMBER
E 202.7.0

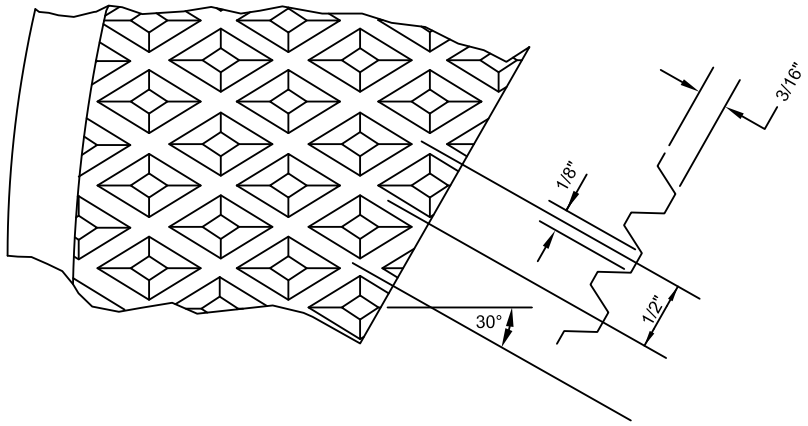

DETAIL OF TREAD

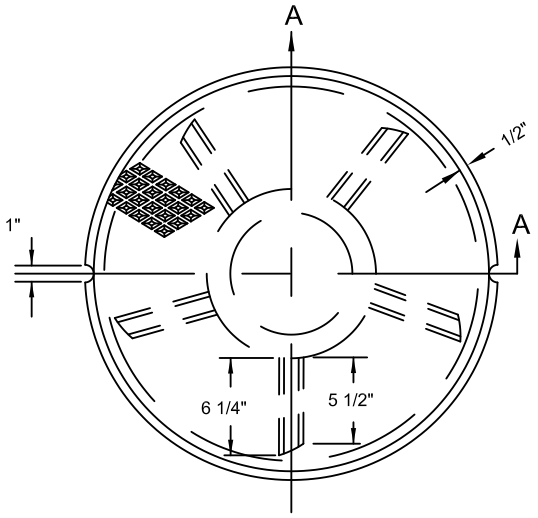

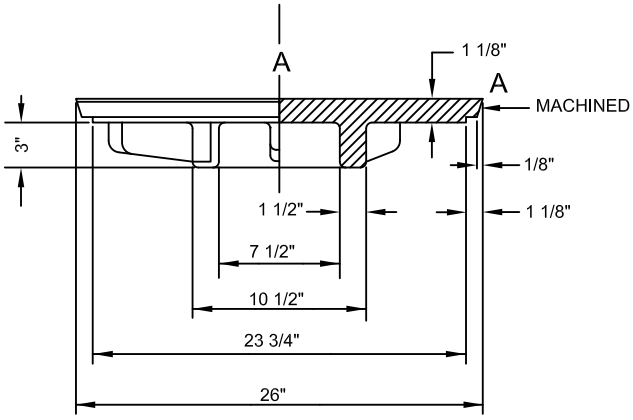

MANHOLE COVER FOR TYPE A & B FRAMES

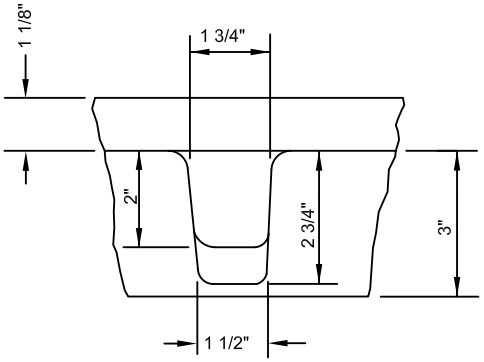

DETAIL OF FIN

NOTES:
1. MATERIAL - CAST IRON: SEE STANDARD SPECIFICATIONS.
2. MINIMUM COVER MASS - 200 LBS.

massDOT Massachusetts Department of Transportation Highway Division
CONSTRUCTION STANDARDS

MANHOLE COVER DETAILS

DATE OF ISSUE
MARCH 2012

DRAWING NUMBER
E 202.8.0

massDOT
Massachusetts Department of Transportation
Highway Division

CONSTRUCTION STANDARDS

CONCRETE COLLARS

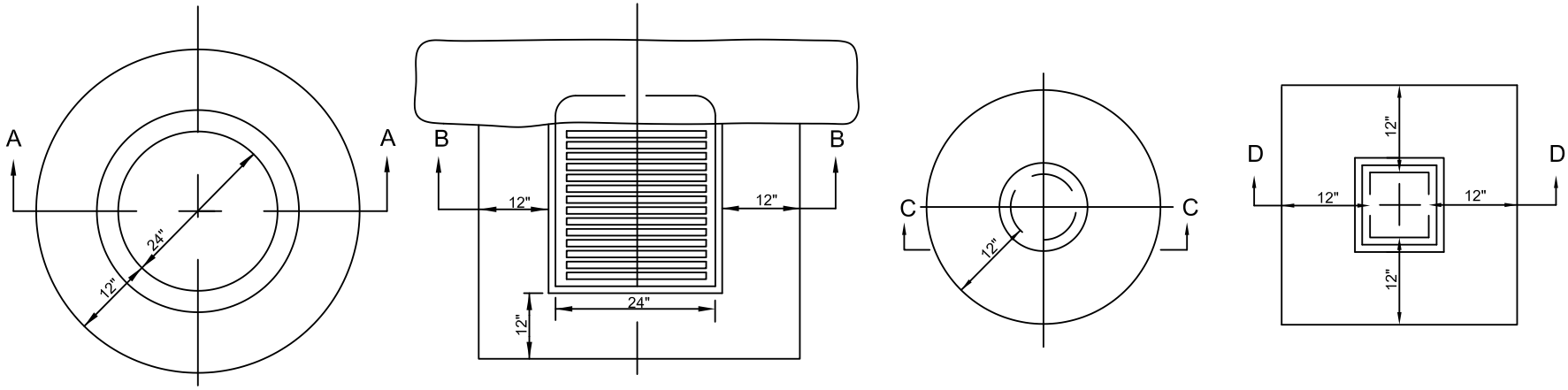

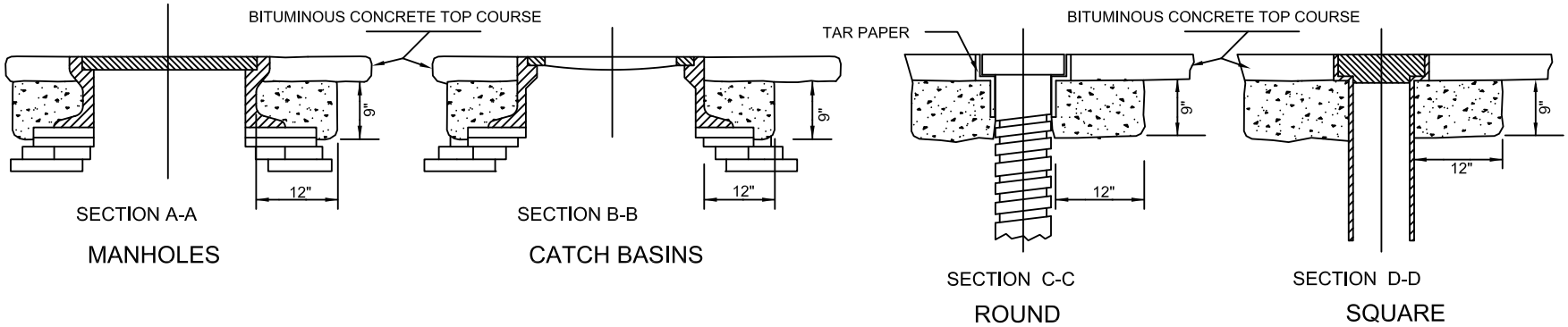

NOTES:

1. COLLARS TO BE 4000PSI - 1 1/2" - 565 LB. CEMENT CONCRETE MASONARY REGULAR OR H.E.S. AS DIRECTED (IF HAND MIXED, SEE LATEST STANDARD SPECIFICATIONS).
2. NO CONCRETE REQUIRED IN CONCRETE PAVEMENT.

DATE OF ISSUE
MARCH 2012

DRAWING NUMBER
E 202.9.0

massDOT
Massachusetts Department of Transportation
Highway Division

CONSTRUCTION STANDARDS

DROP INLETS

TYPE A– PRECAST CONCRETE
TYPE B CONCRETE BLOCK

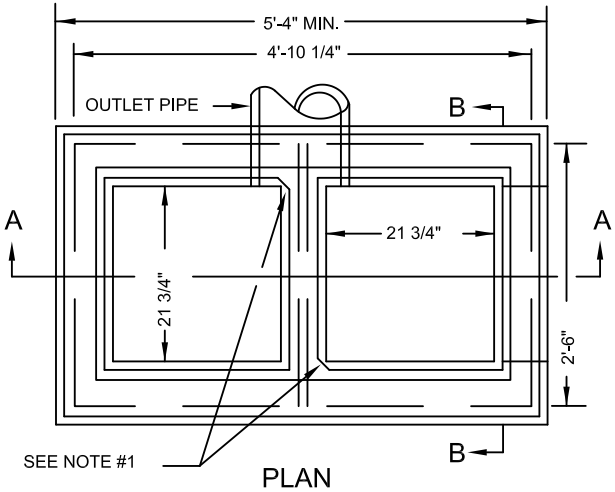

PLAN

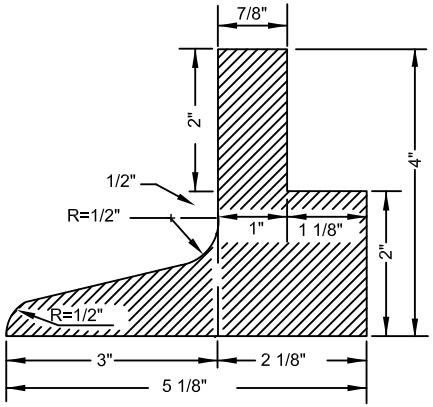

FRAME SECTIONS

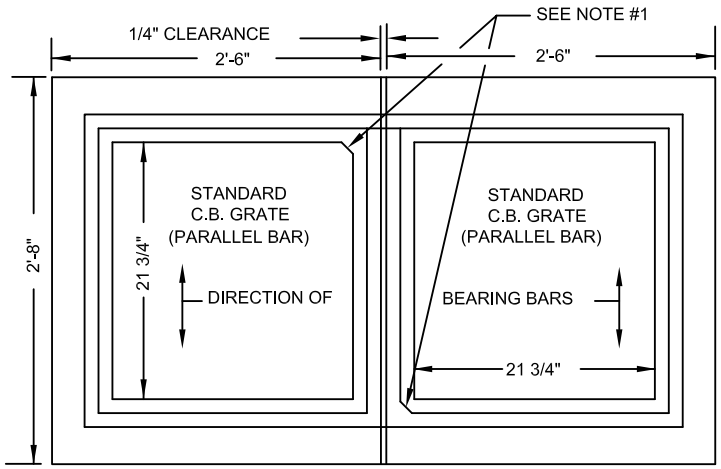

2-3 FLANGE 4" C.I. FRAMES

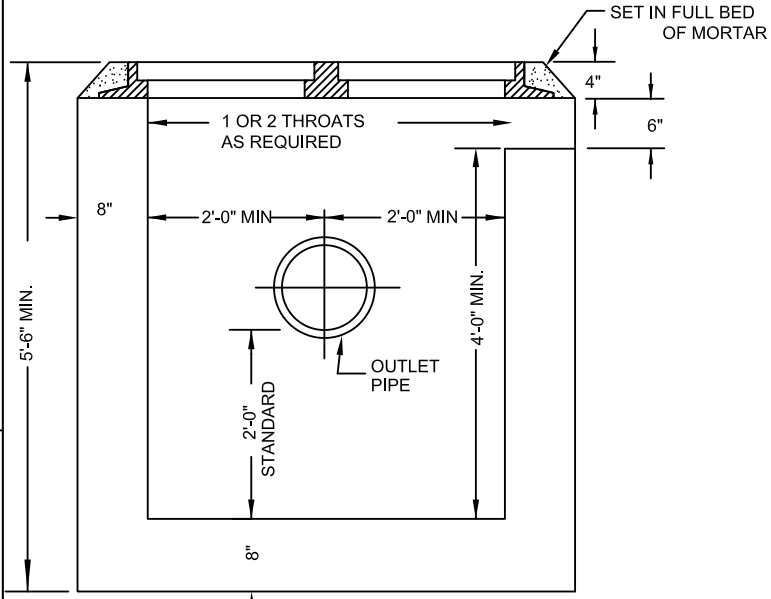

SECTION A-A

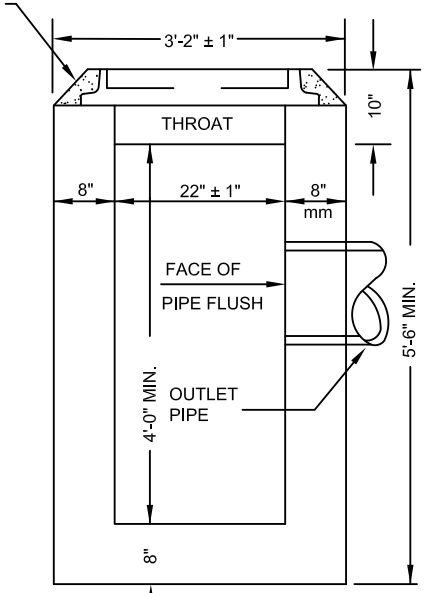

SECTION B-B

NOTES:

1. STANDARD PARALLEL BAR GRATES TO BE USED. SEE DETAILS ON DRAWINGS E 201.10.0
2. MINIMUM C.I. FRAME MASS - 205 LBS. EACH
3. FOR DESCRIPTIONS, MATERIALS AND CONSTRUCTION METHODS SEE LATEST STANDARD SPECIFICATIONS

TYPE"A"

4. 4000 PSI - 1 1/2" - 565 LB

TYPE"B"

5. NOMINAL CONCRETE BLOCK DIMENSIONS
   HEIGHT, 4" TO 8"
   WIDTH, 8"
   LENGTH, 8" TO 16"
6. BLOCKS TO BE SET IN FULL BED OF MORTAR
7. THIS DROP INLET IS NOT TO BE USED AT ANY LOCATION WHERE IT MAY PRESENT A HAZARD TO VEHICLES THAT RUN OFF THE ROAD. FOR FLUSH TYPE SEE DRAWING E 203.2.0

DATE OF ISSUE
MARCH 2012

DRAWING NUMBER
E 203.1.0

massDOT
Massachusetts Department of Transportation
Highway Division

CONSTRUCTION STANDARDS

DROP INLETS

TYPE AF– PRECAST CONCRETE
TYPE BF– CONCRETE BLOCK

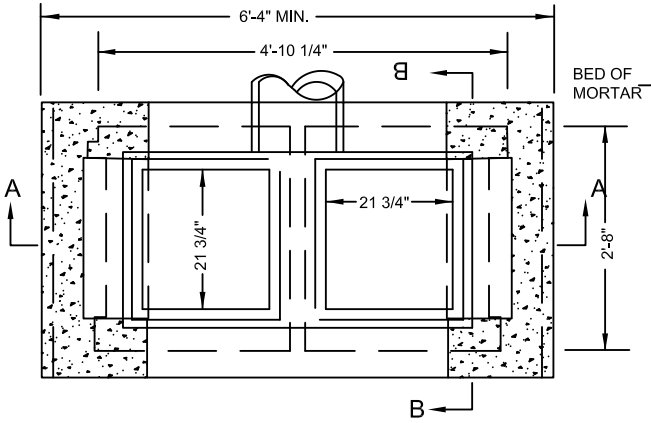

PLAN

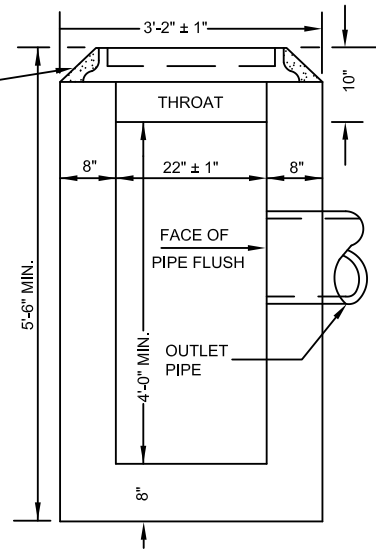

SECTION B-B

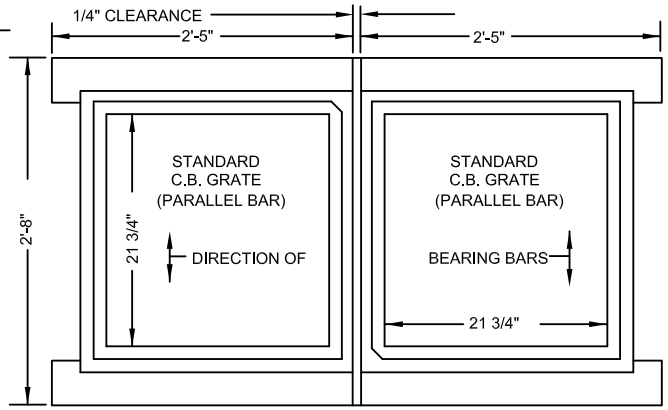

EXCESS FLANGE AREA TO BE REMOVED

2-3 FLANGE 4" C.I. FRAMES

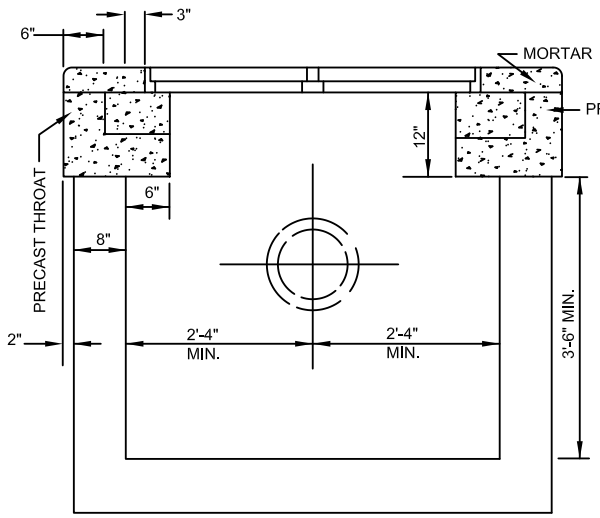

ELEVATION

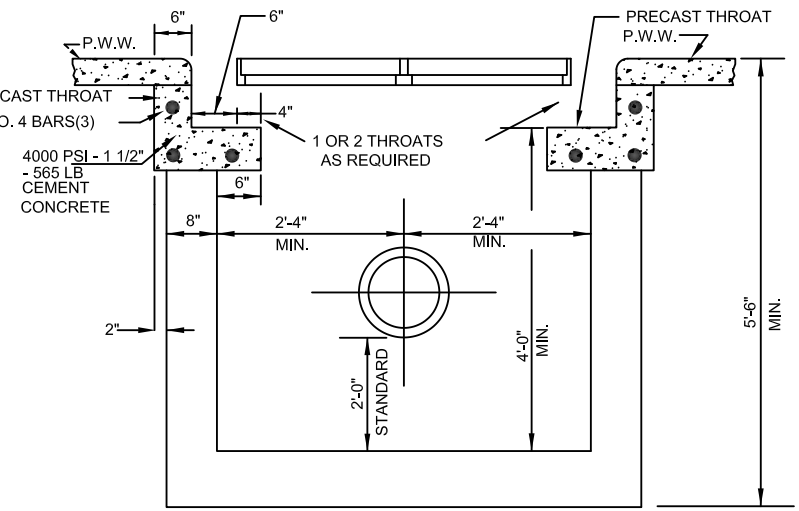

SECTION A-A

NOTES:

1. FOR DETAILS OF PRECAST THROAT SEE DRAWING E 203.7.0
2. SEE DRAWING 203.1.0 FOR DETAILS NOT SHOWN

DATE OF ISSUE
MARCH 2012

DRAWING NUMBER
E 203.2.0

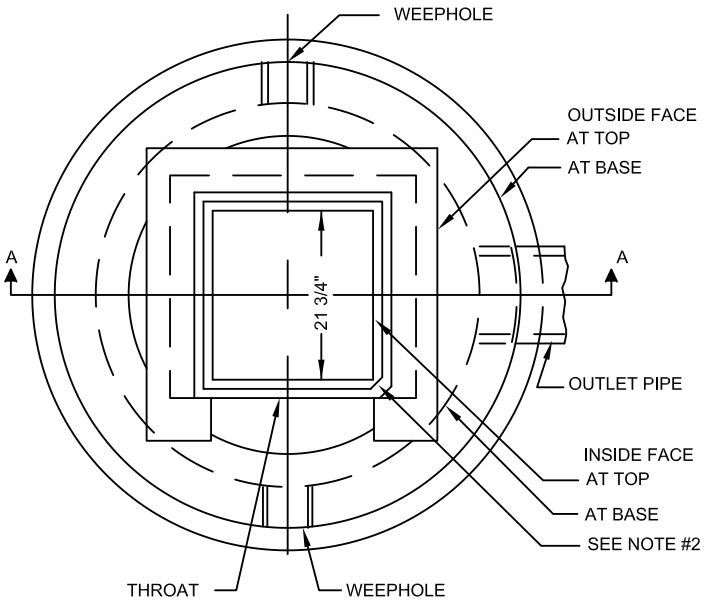

PLAN

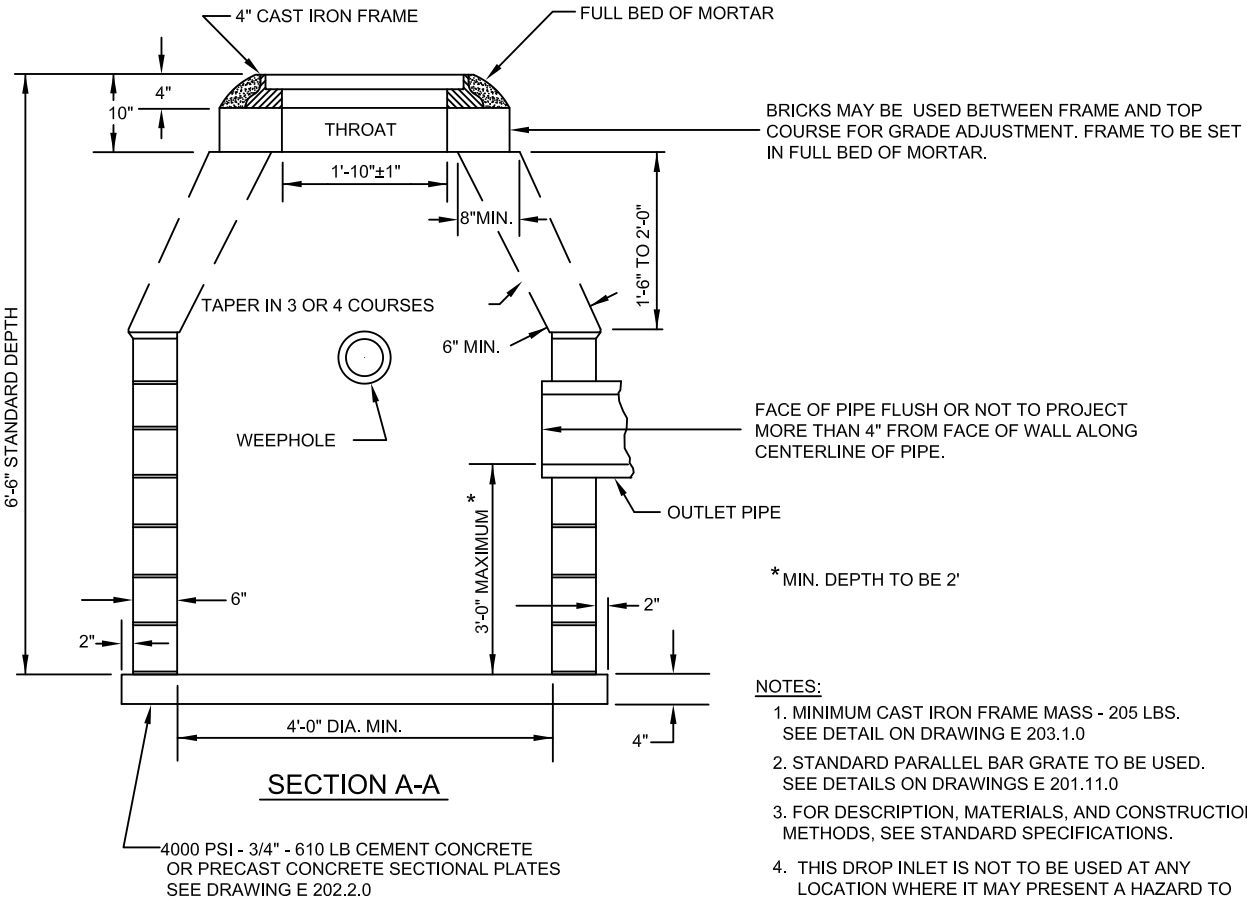

SECTION A-A

NOTES:

1. MINIMUM CAST IRON FRAME MASS - 205 LBS. SEE DETAIL ON DRAWING E 203.1.0
2. STANDARD PARALLEL BAR GRATE TO BE USED. SEE DETAILS ON DRAWINGS E 201.11.0
3. FOR DESCRIPTION, MATERIALS, AND CONSTRUCTION METHODS, SEE STANDARD SPECIFICATIONS.
4. THIS DROP INLET IS NOT TO BE USED AT ANY LOCATION WHERE IT MAY PRESENT A HAZARD TO VEHICLES THAT RUN OFF THE ROAD FOR FLUSH TYPE SEE DRAWING E 203.4.0
5. SEE DRAWING E 201.3.0 CONCRETE BLOCK CATCH BASIN FOR DETAILS

massDOT Massachusetts Department of Transportation Highway Division

CONSTRUCTION STANDARDS

DROP INLET TYPE C

DATE OF ISSUE
MARCH 2012

DRAWING NUMBER
E 203.3.0

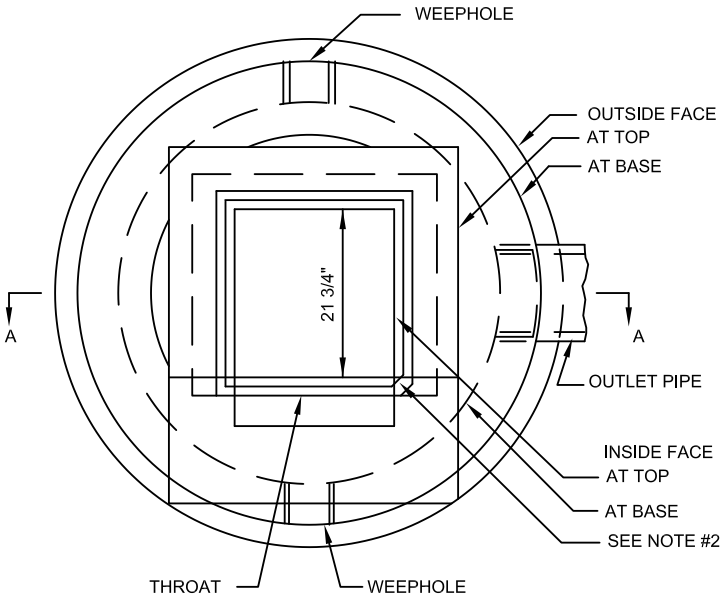

PLAN

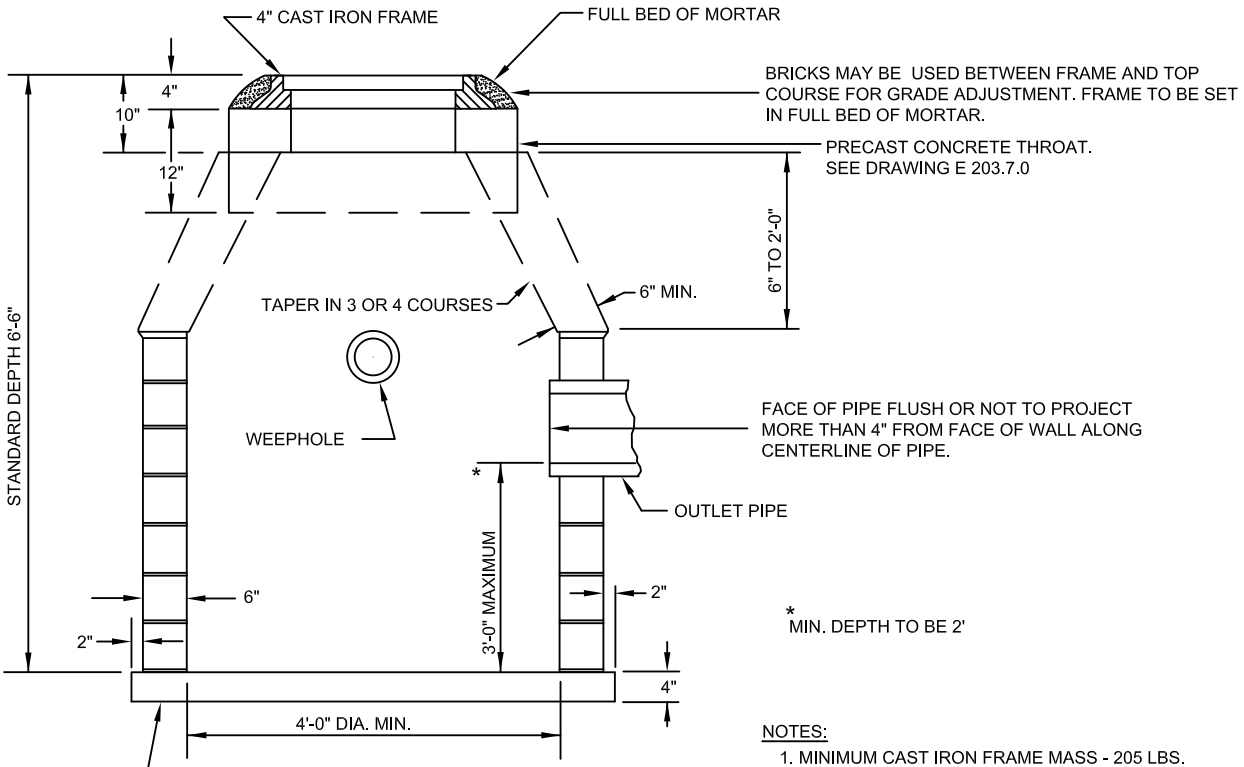

SECTION A-A

* MIN. DEPTH TO BE 2'

NOTES:

1. MINIMUM CAST IRON FRAME MASS - 205 LBS. SEE DETAIL ON DRAWING E 203.1.0
2. STANDARD PARALLEL BAR GRATE TO BE USED. SEE DETAILS DRAWINGS E 201.11.0
3. FOR DESCRIPTION, MATERIALS, AND CONSTRUCTION METHODS, SEE STANDARD SPECIFICATIONS.
4. TO BE USED IN MEDIANS AND DITCHES THAT ARE WITHIN THE RECOVERY AREA.
5. SEE DRAWING E 201.3.0 CONCRETE BLOCK CATCH BASIN FOR DETAILS

massDOT Massachusetts Department of Transportation Highway Division

CONSTRUCTION STANDARDS

DROP INLET TYPE CF

DATE OF ISSUE
MARCH 2012

DRAWING NUMBER
E 203.4.0

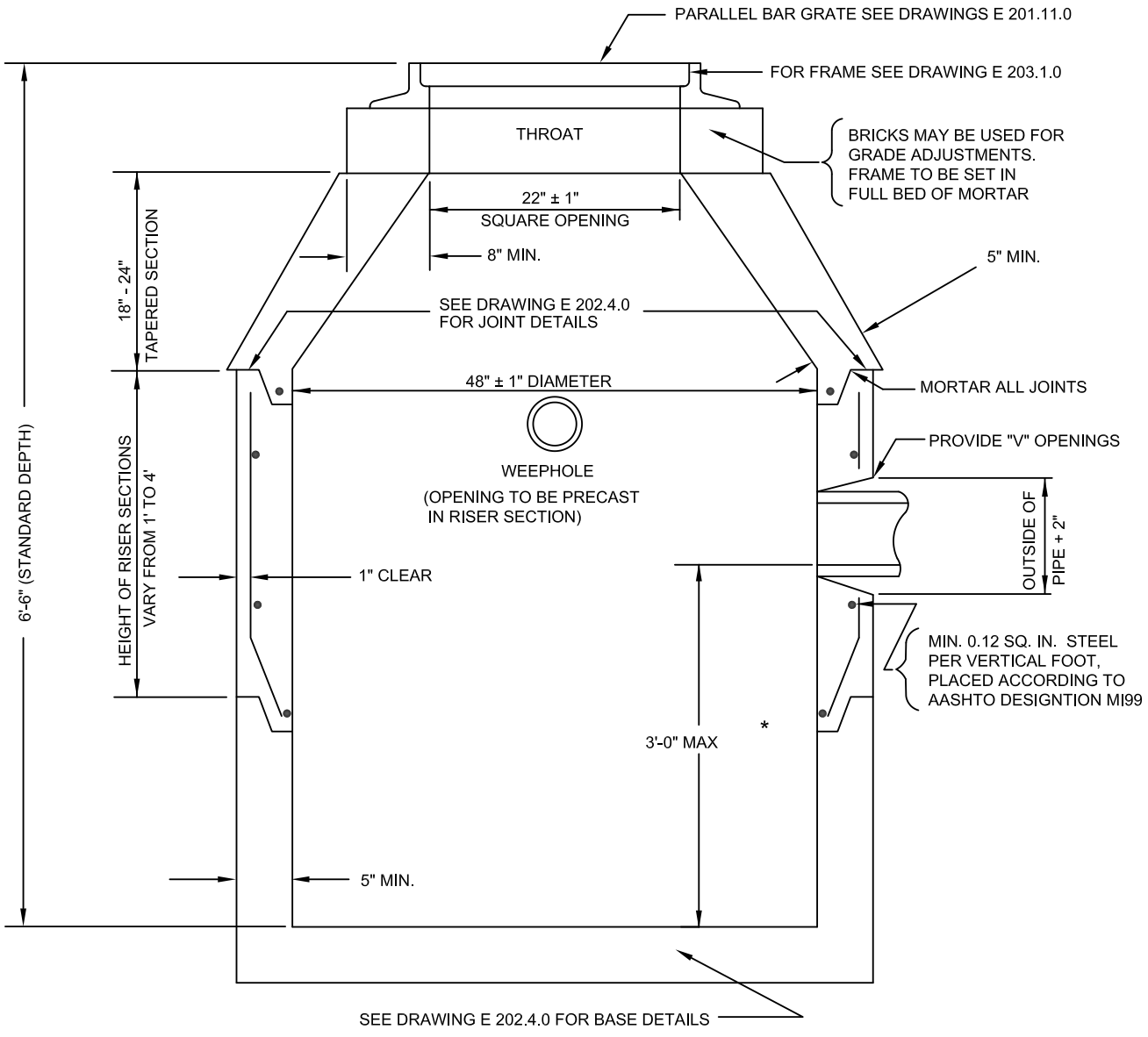

* MINIMUM DEPTH OF SUMP TO BE 2'

NOTES:

1. DETAILS NOT INDICATED ABOVE ARE TO BE SIMILAR TO THOSE SHOWN ON DRAWING E 203.3.0
2. FOR DESCRIPTIONS, MATERIALS AND CONSTRUCTION METHOD, SEE LATEST STANDARD SPECIFICATIONS
3. THIS DROP INLET IS NOT TO BE USED AT ANY LOCATION WHERE IT MAY PRESENT A HAZARD TO VEHICLES THAT RUN OFF THE ROAD. FOR FLUSH TYPE SEE DRAWING E 203.6.0

massDOT Massachusetts Department of Transportation Highway Division CONSTRUCTION STANDARDS	DROP INLET TYPE D	DATE OF ISSUE MARCH 2012 DRAWING NUMBER **E 203.5.0**

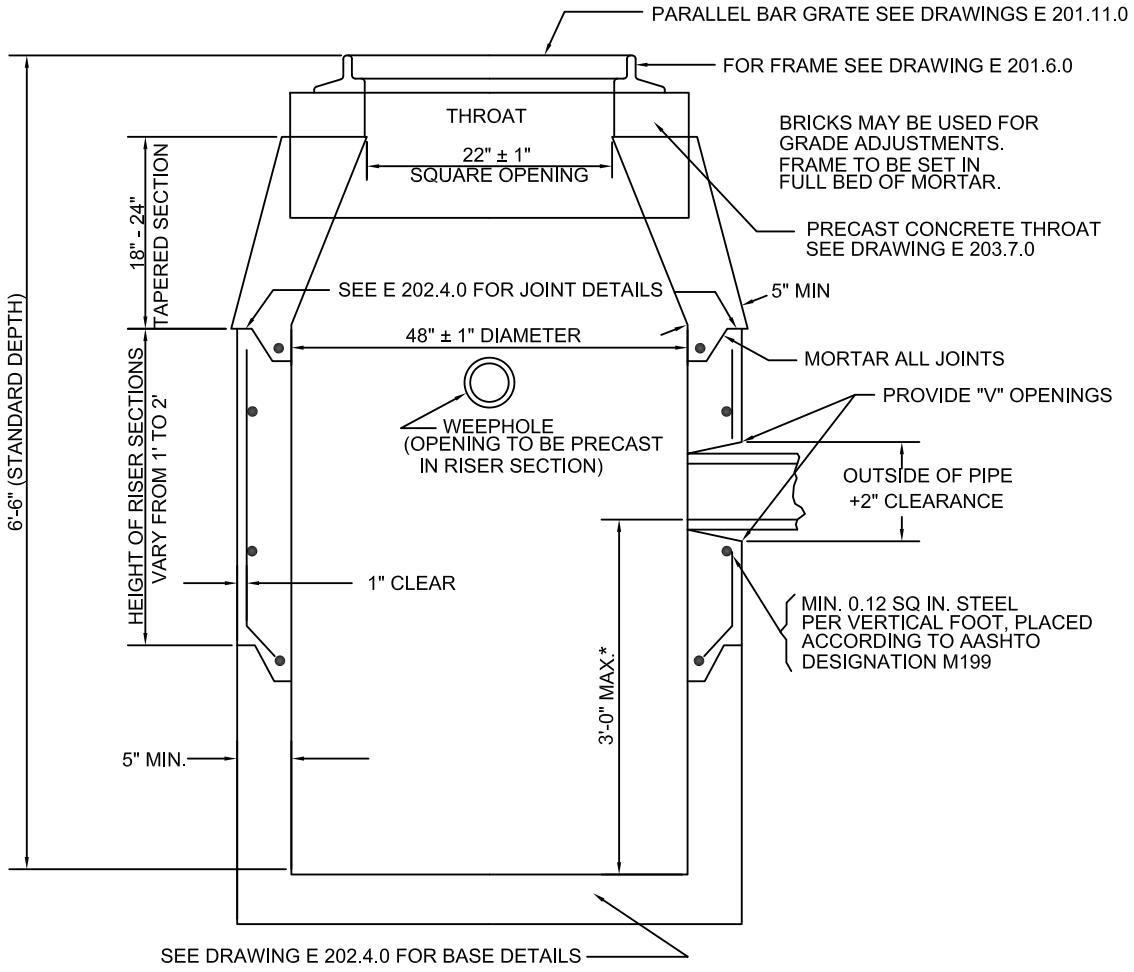

*MINIMUM DEPTH OF SUMP TO BE 2'

NOTES:

1. DETAILS NOT INDICATED ABOVE ARE TO BE SIMILAR TO THOSE SHOWN ON DRAWINGS E 203.3.0 AND E 203.4.0
2. FOR DESCRIPTIONS, MATERIALS AND CONSTRUCTION METHOD, SEE LATEST STANDARD SPEFICATIONS
3. TO BE USED IN MEDIANS AND DITCHES THAT ARE WITHIN THE RECOVERY AREA

massDOT Massachusetts Department of Transportation Highway Division
CONSTRUCTION STANDARDS

DROP INLET TYPE DF

DATE OF ISSUE
MARCH 2012

DRAWING NUMBER
E 203.6.0

massDOT
Massachusetts Department of Transportation
Highway Division

CONSTRUCTION STANDARDS

FLUSH DROP INLET THROAT

PRECAST CONCRETE THROAT FOR USE IN MEDIANS & DITCHES WITH TYPES CF AND DF DROP INLETS

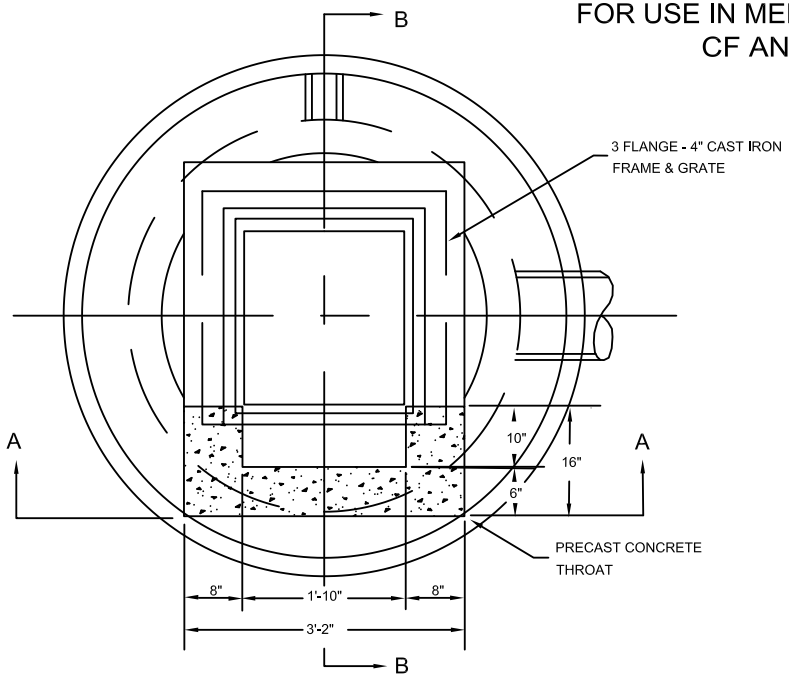

PLAN

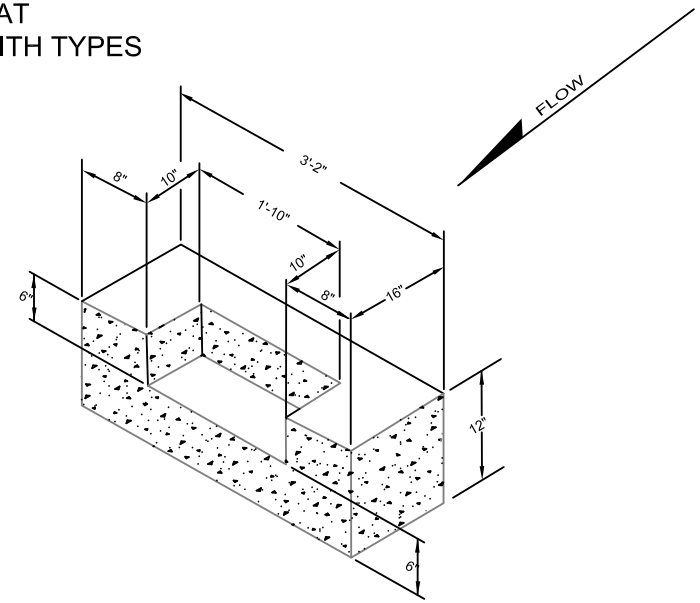

ISOMETRIC OF PRECAST CONCRETE THROAT OPENING

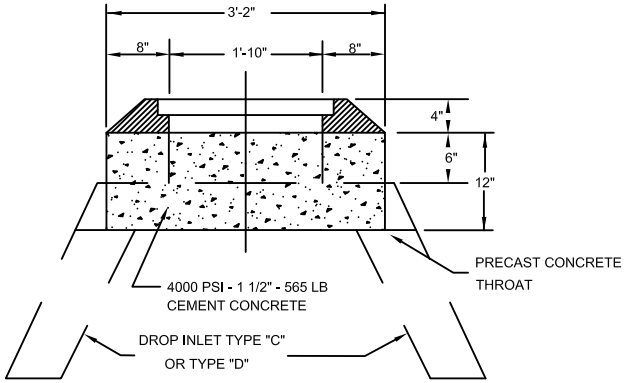

SECTION A-A

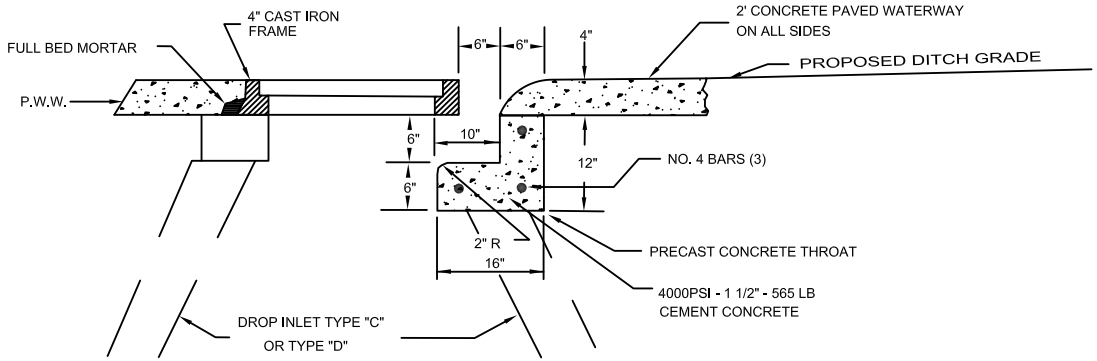

SECTION B-B

DATE OF ISSUE
MARCH 2012

DRAWING NUMBER
E 203.7.0

massDOT
Massachusetts Department of Transportation
Highway Division

CONSTRUCTION STANDARDS

GUTTER INLET

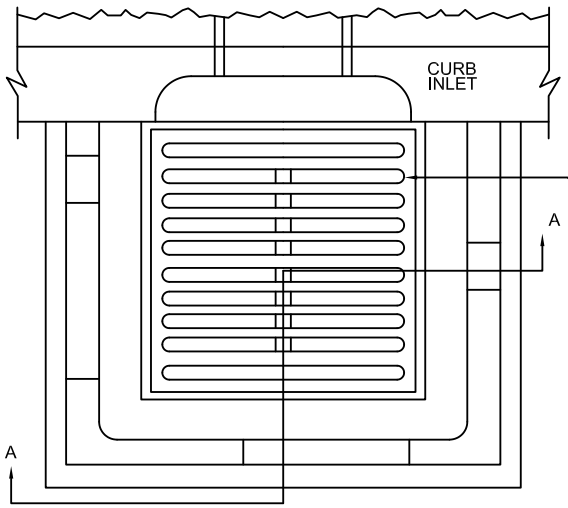

NOTES:

1. WHERE CURB INLET IS NOT USED THE INSIDE HORIZONTAL DIMENSIONS OF GUTTER INLET TO BE 24"±1" X 24"±1" IN WHICH CASE AND UNLESS OTHERWIZE DIRECTED, A STANDARD 4-FLANGE FRAME IS TO BE USED.
2. BRICKS MAY BE USED BETWEEN TOP COURSE AND FRAME FOR GRADE ADJUSTMENT.
3. A CASCADE GRATE IS TO BE USED WHERE BICYCLE TRAVEL IS ALLOWED.
4. FOR DESCRIPTION, MATERIALS AND CONSTRUCTION METHODS, SEE STANDARD SPECIFICATIONS.

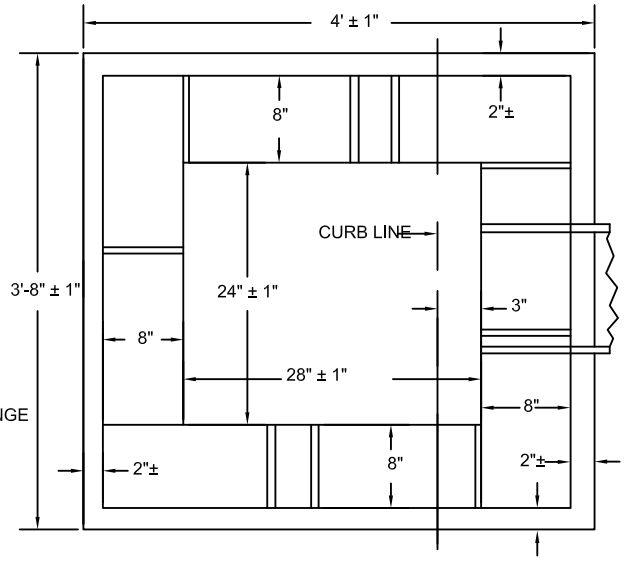

SECTION C-C

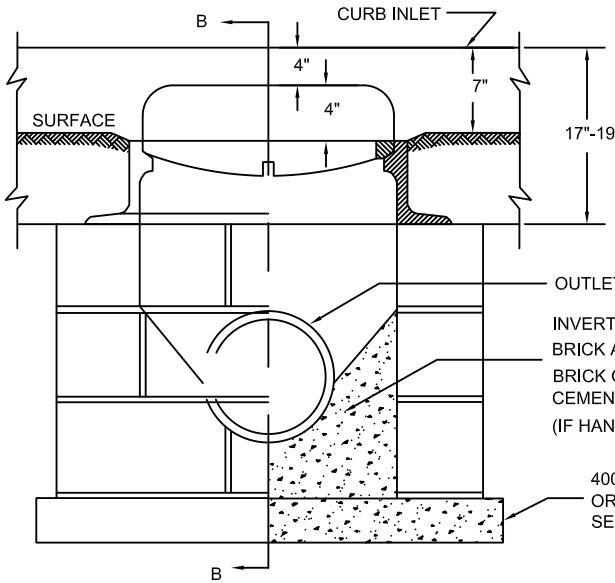

SECTION A-A

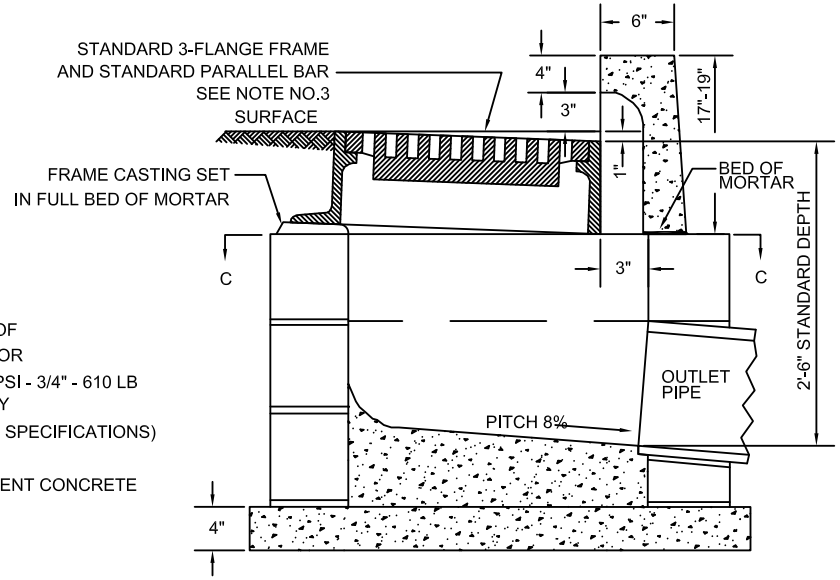

SECTION B-B

DATE OF ISSUE
MARCH 2012

DRAWING NUMBER
E 204.2.0

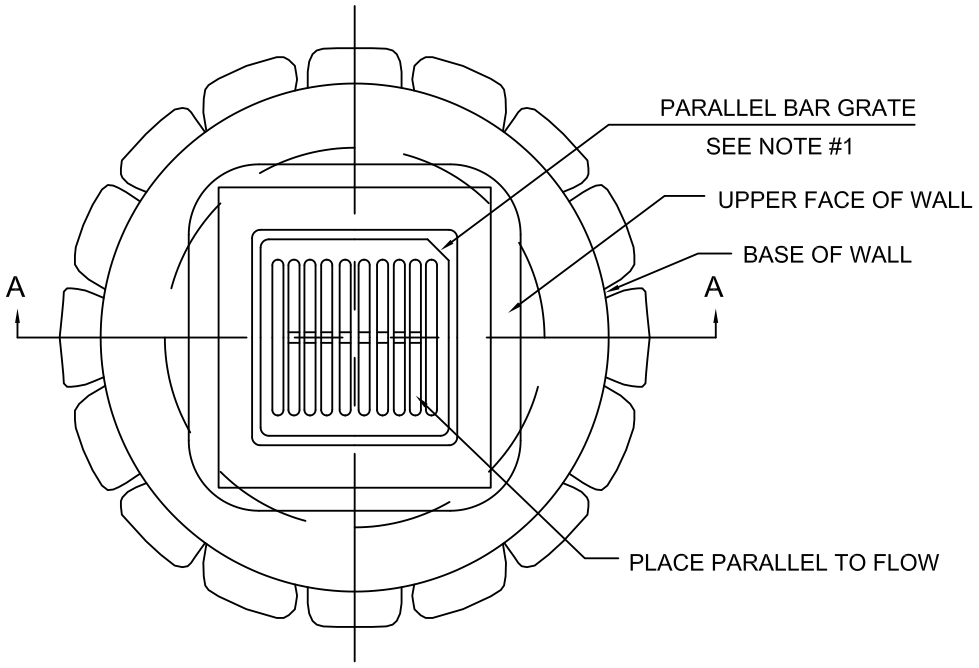

NOTES:

1. USE CASCADE GRATE WHERE BICYCLE TRAVEL IS LEGALLY ALLOWED. SEE DRAWINGS E 201.7.0 - E 201.9.0
2. BRICK WALL TO BE 8" THICK; EVERY FIFTH COURSE TO BE HEADERS; OUTSIDE TO BE FINISHED WITH CEMENT MORTAR COATING.
3. WHEN USING CONCRETE BLOCKS, BLOCKS TO BE SET IN FULL BED OF MORTAR AND TAPERED IN 3 OR 4 COURSES.
4. BACKFILL FOR FULL DEPTH OF BASIN EXCAVATION TO BE GRAVEL.
5. FOR DESCRIPTION, MATERIALS AND METHOD OF CONSTRUCTION SEE STANDARD SPECIFICATIONS.

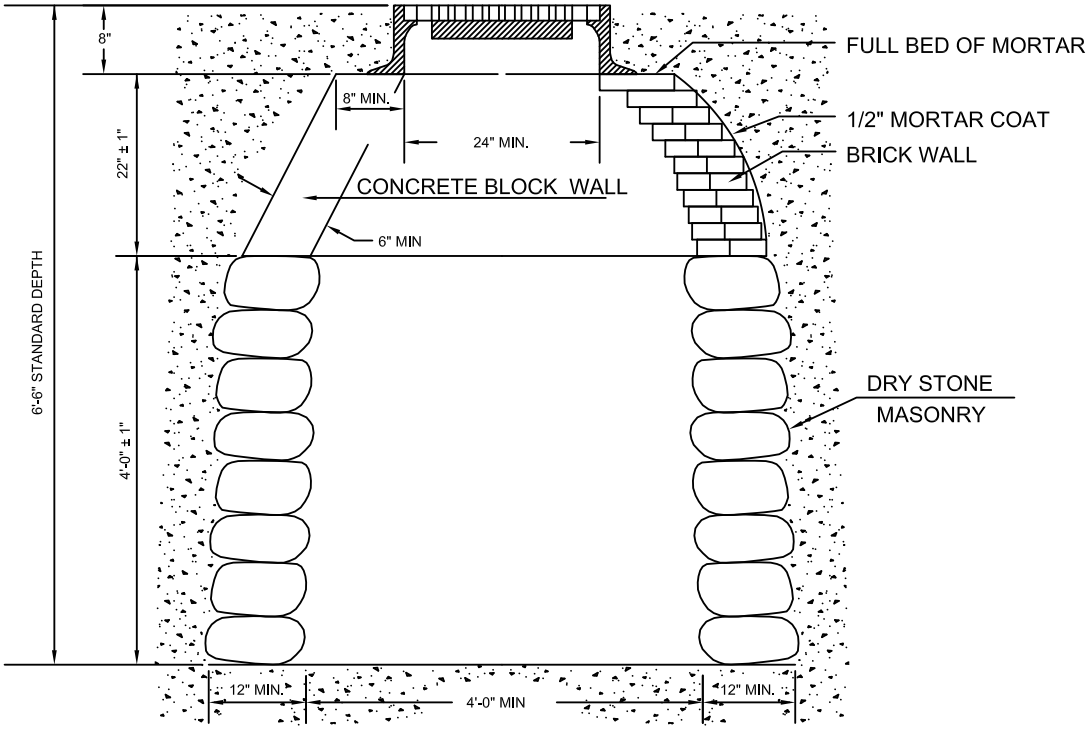

SECTION A-A

massDOT Massachusetts Department of Transportation Highway Division
CONSTRUCTION STANDARDS

DRY STONE MASONRY LEACHING BASIN

DATE OF ISSUE
MARCH 2012

DRAWING NUMBER
E 205.1.0

massDOT
Massachusetts Department of Transportation
Highway Division

CONSTRUCTION STANDARDS

CONCRETE BLOCK LEACHING BASIN

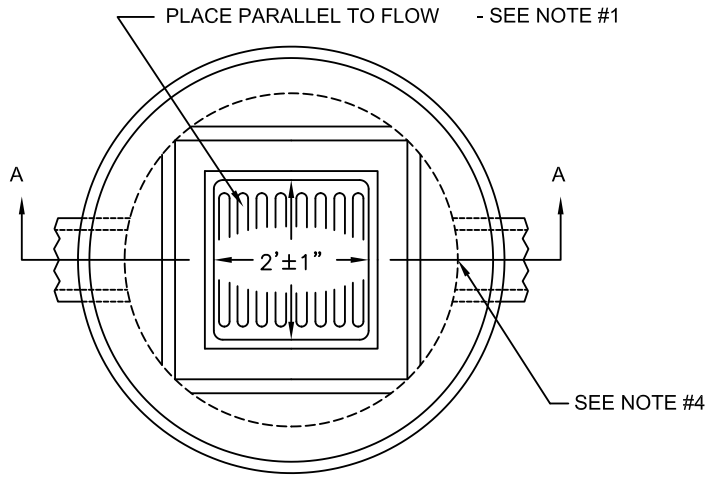

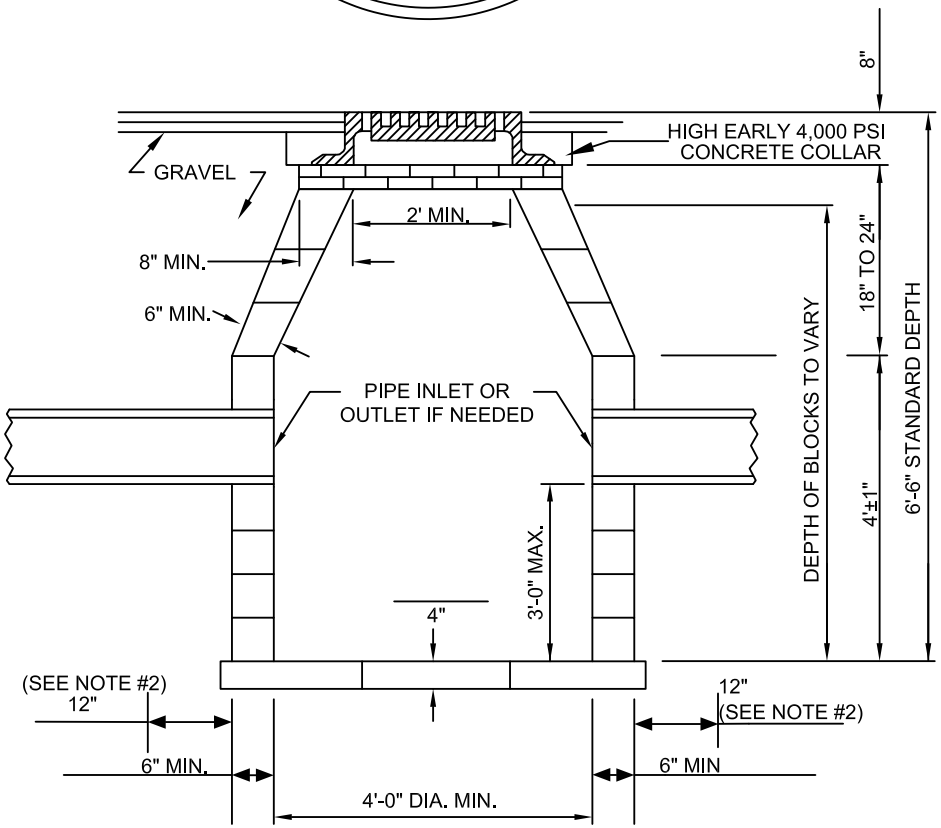

SECTION A-A

NOTES:

1. **USE CASCADE GRATE WHERE BICYCLE TRAVEL IS LEGALLY ALLOWED. SEE DRAWINGS E 201.7.0 - E 201.9.0.**
2. BACKFILL FOR FULL DEPTH OF BASIN EXCAVATION TO BE 1/2" CRUSHED STONE.
3. FOR DESCRIPTION, MATERIALS, AND METHOD OF CONSTRUCTION SEE STANDARD SPECIFICATIONS.
4. FACE OF PIPE FLUSH OR NOT TO PROJECT MORE THAN 4" FROM FACE OF WALL ALONG CENTERLINE OF PIPE.
5. THE LEACHING BASIN SHALL BE CONSTRUCTED OF CEMENT CONCRETE BLOCKS TO CONFORM TO THE REQUIREMENTS OF STANDARD SPECIFICATION SUBSECTION M4.05.1.

PLAN OF BASE

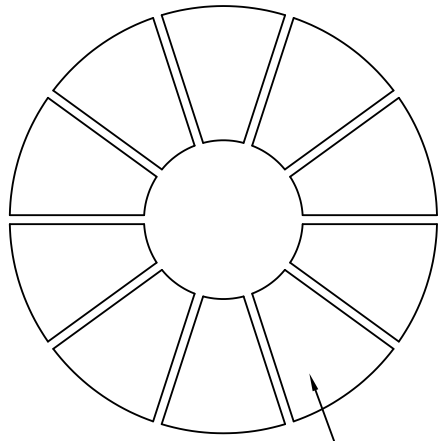

BOTTOM PLATES REQUIRE
10 PIECES PER CIRCLE WITH
1/2" SPACING BETWEEN PLATES.
4" THICK

DATE OF ISSUE
MARCH 2012

DRAWING NUMBER
E 205.2.0

massDOT Massachusetts Department of Transportation Highway Division

CONSTRUCTION STANDARDS

CORRUGATED STEEL METAL PIPE — TABLE OF MINIMUM WALL THICKNESS

DATE OF ISSUE MARCH 2012

DRAWING NUMBER E 206.1.0

TABLE OF MINIMUM WALL THICKNESS (FT)

(2 2/3" x 1/2" CORRUGATION)

DIA. (IN)	HEIGHT OF COVER ABOVE TOP OF PIPE (FEET)										
	MIN. - 10	11 - 15	16 - 20	21 - 25	26 - 30	31 - 35	38 - 40	41 - 45	46 - 50	51 - 55	56 - 60
15	16	16	16	16	16	16	16	16			
18	16	16	16	16	16	16	14	14	14		
21	16	16	16	16	16	16	14	14	14	12	
24	16	16	16	14	14	14	14	12	12	10	10
30	14	14	14	14	12	12	12	10	10	10	8
36	14	14	12	12	10	10	10	10	8	8	8
42	12	12	12	10	10	10	8	8	8	8	8
48	12	12	12	10	8	8	10	10	10	8	8
54	10	10	8	8	10	10	10	8	8		
60	8	10	10	10	8	8	8	8			
66	10	10	10	8	8	8	8				
72	8	8	8	8	8						

NOTES:

1. ALL PIPE BELOW SOLID LINE TO BE SHOP STRUTTED AS PER STATE SPECIFICATIONS
2. MINIMUM COVER IS TOP OF PIPE TO ROAD - 18" GRADE

massDOT
Massachusetts Department of Transportation
Highway Division

CONSTRUCTION STANDARDS

CORRUGATED STEEL METAL PIPE ARCH – TABLE OF MINIMUM WALL THICKNESS

TABLE OF MINIMUM WALL THICKNESS (IN.)

MADE FROM PIPE OF DIA. (IN.)	SPAN (IN.)	RISE (IN.)	HEIGHT OF COVER ABOVE TOP OF PIPE ARCH (FEET)			
			MIN. - 3	4 - 5	6 - 10	11 - 15
15	18	11	16	16	16	16
18	22	13	16	16	16	16
24	29	18	14	14	14	14
30	36	22	14	14	14	14
36	43	27	12	12	12	12
42	50	31	12	12	12	12
48	58	36	10	12	12	10
54	65	40	10	10	10	8
60	72	44	8	8	8	

NOTES:

1. MINIMUM COVER IS TOP OF PIPE TO ROAD GRADE - 18"
2. FOR HEAVIER FILLS USE STRUCTURAL PLATE

DATE OF ISSUE
MARCH 2012

DRAWING NUMBER
E 206.2.0

massDOT
Massachusetts Department of Transportation
Highway Division

CONSTRUCTION STANDARDS

CORRUGATED METAL PIPE UNDER FILL SLOPES

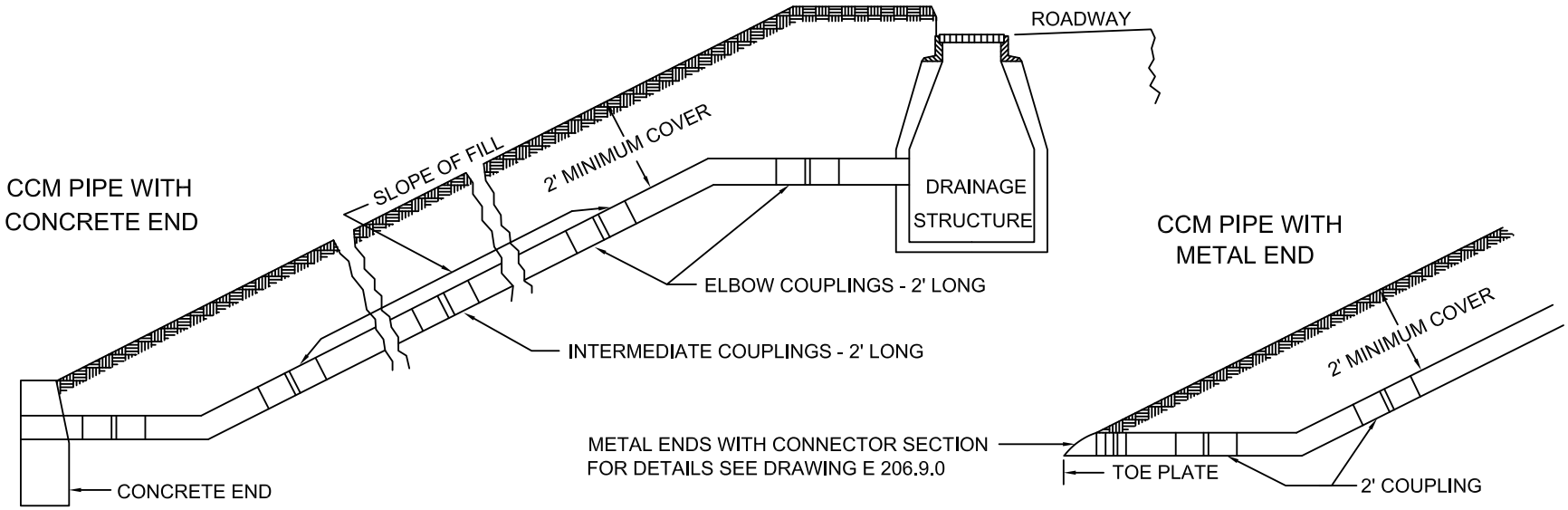

ELBOW AND COUPLING DETAILS

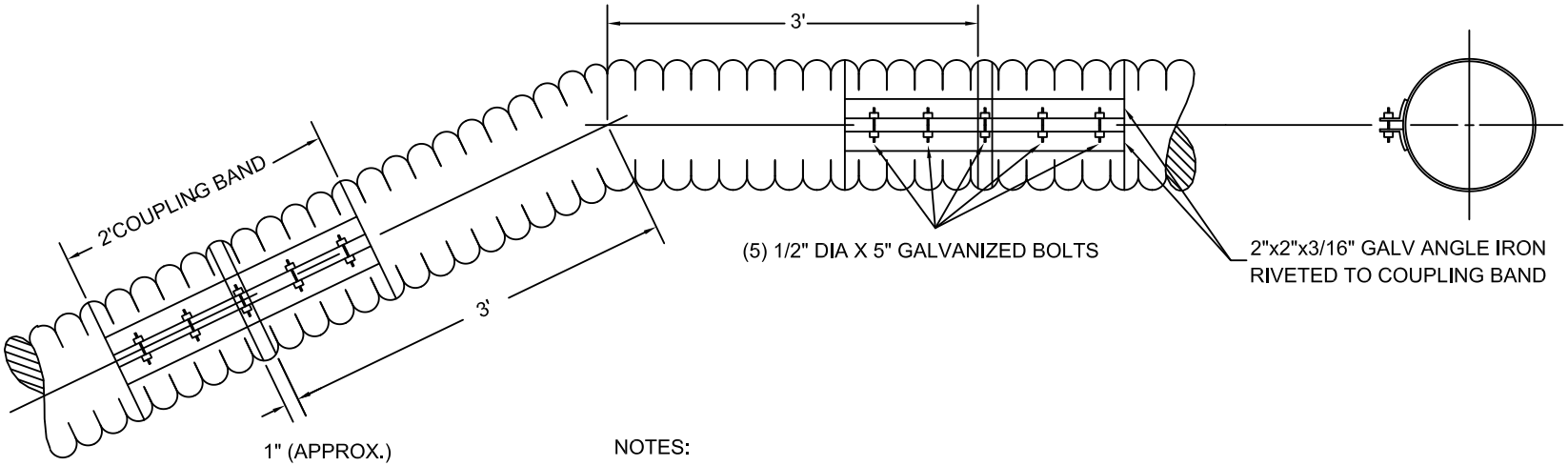

NOTES:

1. A TOE PLATE IS REQUIRED FOR ALL METAL ENDS.
2. ALL METAL END UNITS AND ELBOWS TO BE SHOP FABRICATED.

DATE OF ISSUE
MARCH 2012

DRAWING NUMBER
E 206.3.0

massDOT
Massachusetts Department of Transportation
Highway Division

CONSTRUCTION STANDARDS

CONCRETE AND FIELD STONE MASONRY PIPE ENDS FOR 8" to 30" PIPE

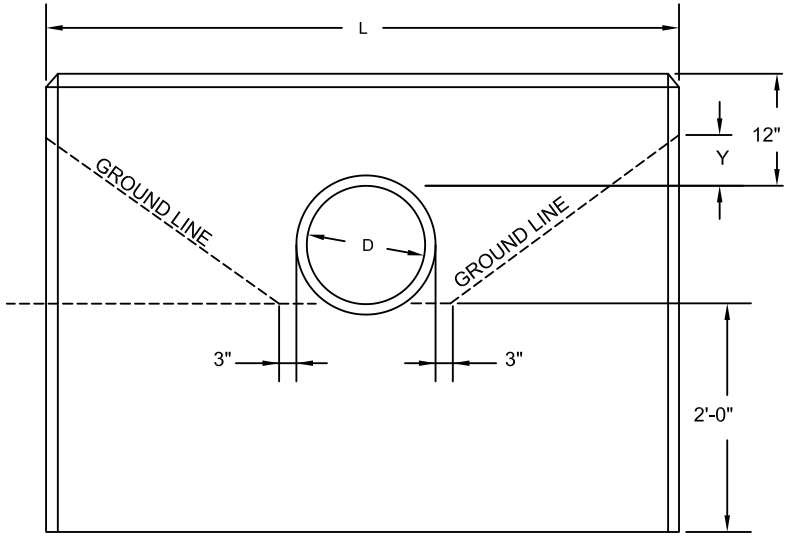

FRONT ELEVATION

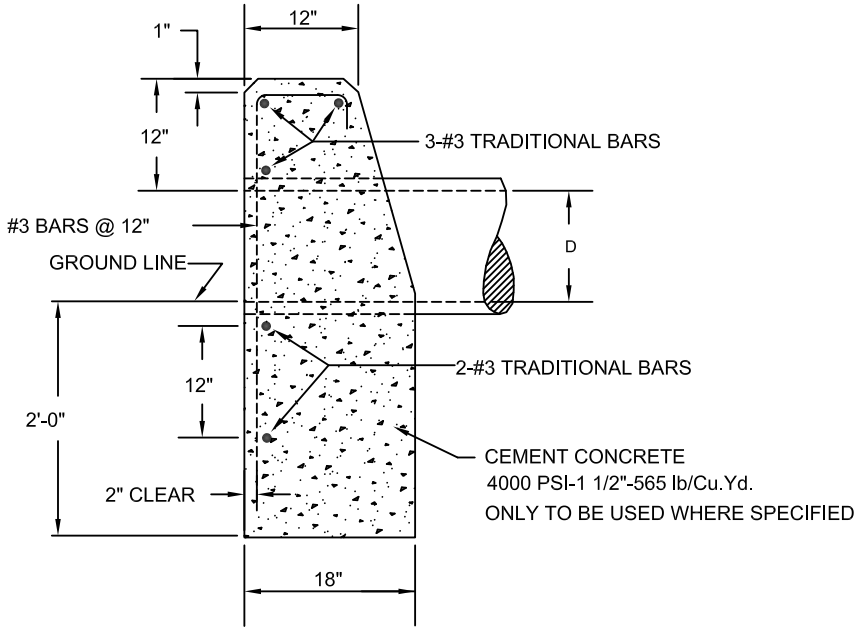

END ELEVATION

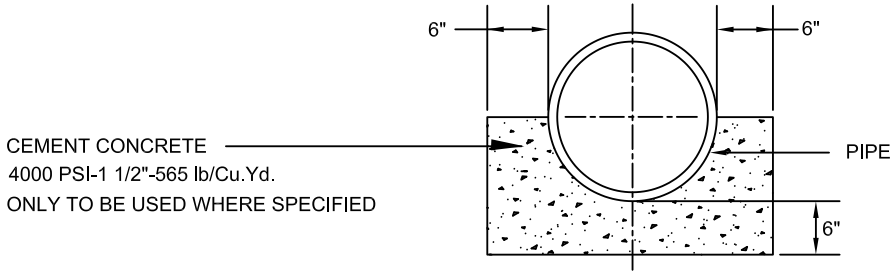

CONCRETE CRADLE
FOR PIPE CULVERTS

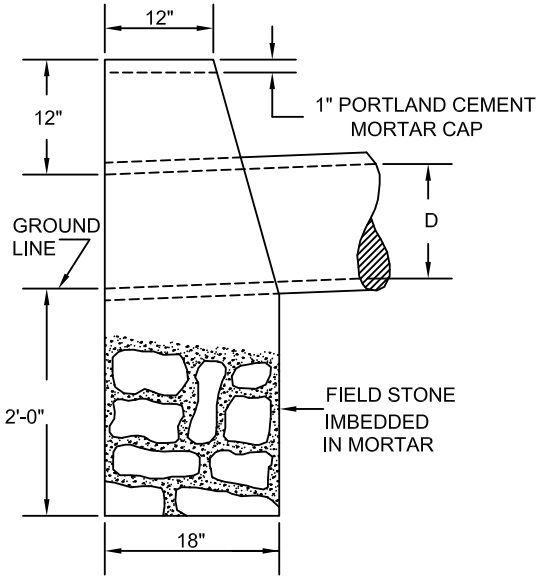

END ELEVATION

NOTES:

1. FOR DESCRIPTIONS, MATERIALS AND CONSTRUCTION METHODS, SEE LATEST STANDARD SPECIFICATIONS.
2. ALL CONCRETE DIMENSIONS SHOWN ARE MINIMUM.
3. PAYMENTS WILL BE BASED ON THE ACCOMPANYING TABLE.
4. FOR QUANTITY TABLES SEE E 206.4.1

DATE OF ISSUE
MARCH 2012

DRAWING NUMBER
E 206.4.0

massDOT
Massachusetts Department of Transportation
Highway Division

CONSTRUCTION STANDARDS

QUANTITY TABLES FOR CONCRETE AND FIELD STONE MASONRY PIPE ENDS

ENGLISH UNITS

PIPE DIAM. D	1 1/2 : 1 SLOPE				2 : 1 SLOPE			
	L	CONC. OR F.S.M. CU. YDS.	STEEL LBS.	TRENCH EXCAV. 1'-0" DEPTH CU. FT.	L	CONC. OR F.S.M. CU. YDS.	STEEL LBS.	TRENCH EXCAV. 1'-0" DEPTH CU. FT.
8"	4'-2"	0.77	15	21.60	5'-10"	1.08	21	27.40
10"	4'-10"	0.92	20	23.91	6'-8"	1.28	23	30.35
12"	5'-6"	1.08	21	26.25	7'-6"	1.49	29	33.25
15"	6'-6"	1.34	24	29.75	8'-9"	1.82	32	37.63
18"	7'-6"	1.61	30	33.25	10'-0"	2.18	39	42.00
21"	8'-6"	1.95	34	37.35	11'-6"	2.62	43	47.25
24"	9'-3"	2.16	35	39.38	12'-6"	2.97	50	50.75
30"	10'-6"	2.63	44	43.75	15'-0"	3.86	62	59.50

Y	4" FOR 1 1/2 : 1 SLOPE
	6" FOR 2 : 1 SLOPE

DATE OF ISSUE
MARCH 2012

DRAWING NUMBER
E 206.4.1

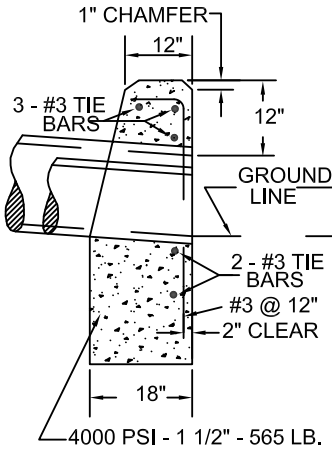

END ELEVATION

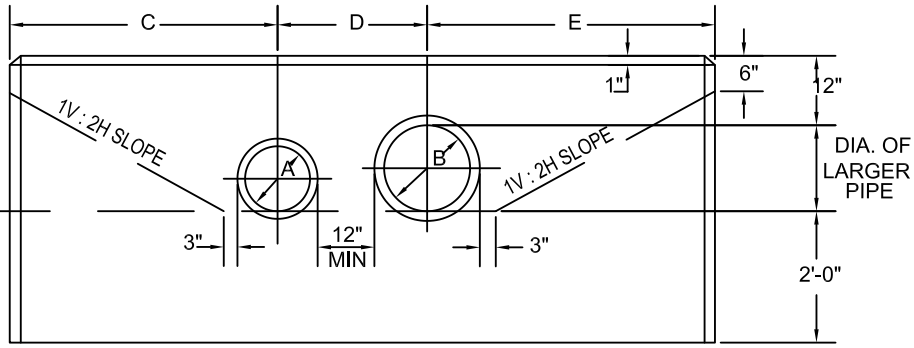

FRONT ELEVATION

FIELD STONE MASONRY ENDS

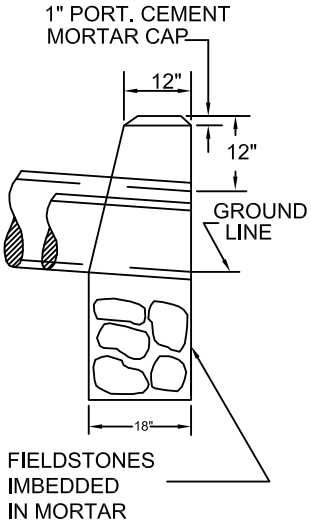

END ELEVATION

DESIGN NO.	DIAMETER (IN.)		LENGTHS			MASONRY (CY)	STEEL (LBS)	TRENCH EXCAV. 1'-0" DEPTH (CF)
	A	B	C	D	E			
1	12	12	3'-9"	2'-2"	3'-9"	1.89	37	40.85
2	12	15	4'-3"	2'-4"	4'-5"	2.27	42	45.50
3	12	18	4'-9"	2'-6"	5'-0"	2.66	48	49.88
4	12	21	5'-4"	2'-8"	5'-8"	3.12	54	54.85
5	12	24	5'-9"	2'-10"	6'-3"	3.54	59	58.91
6	12	30	6'-9"	3'-0"	7'-6"	4.48	71	67.38
7	15	15	4'-5"	2'-6"	4'-5"	2.32	41	46.66
8	15	18	4'-11"	2'-8"	5'-0"	2.72	48	51.03
9	15	21	5'-5"	2'-10"	5'-8"	3.16	54	55.72
10	15	24	5'-11"	3'-0"	6'-3"	3.60	60	60.10
11	15	30	6'-11"	3'-2"	7'-6"	4.54	72	68.53
12	18	18	5'-0"	2'-8"	5'-0"	2.72	48	51.35
13	18	21	5'-7"	2'-10"	5'-8"	3.17	52	56.28
14	18	24	6'-0"	3'-0"	6'-3"	3.58	60	60.38
15	18	30	7'-0"	3'-2"	7'-6"	4.53	72	68.85
16	21	21	5'-8"	3'-0"	5'-8"	3.20	53	57.19
17	21	24	6'-2"	3'-4"	6'-3"	3.69	61	62.13
18	21	30	7'-2"	3'-6"	7'-6"	4.65	73	70.60
19	24	24	6'-3"	3'-4"	6'-3"	3.67	61	62.40
20	24	30	7'-3"	3'-8"	7'-6"	4.69	74	64.47
21	30	30	7'-6"	4'-0"	7'-6"	4.76	75	73.50

NOTE:

1. FOR DESCRIPTIONS, MATERIALS AND CONSTRUCTION METHODS, SEE STANDARD SPECIFICATIONS.
2. ALL CONCRETE DIMENSIONS SHOWN ARE MINIMUM.
3. PAYMENTS WILL BE BASED ON THE QUANTITIES SHOWN IN ACCOMPANYING TABLE.

massDOT Massachusetts Department of Transportation Highway Division
CONSTRUCTION STANDARDS

CONCRETE AND FIELDSTONE MASONRY PIPE ENDS FOR COMBINATION PIPES UP TO 30"

DATE OF ISSUE
MARCH 2012

DRAWING NUMBER
E 206.5.0

massDOT
Massachusetts Department of Transportation
Highway Division

CONSTRUCTION STANDARDS

CONCRETE AND FIELDSTONE MASONRY PIPE ENDS FOR 30" TO 84" PIPE

NOTE:
1. FOR DESCRIPTION, MATERIALS AND CONSTRUCTION METHOD, SEE STANDARD SPECIFICATIONS.
2. ALL CONCRETE DIMENSIONS SHOWN ARE MINIMUM.
3. PAYMENTS WILL BE BASED ON THE QUANTITIES SHOWN IN THE ACCOMPANYING TABLE.

1V:1.5H AND 1V:2H SLOPES								1V:1.5H SLOPE			1V:2H SLOPE			TRENCH EXCAV. FOR 1:2 SLOPE FOR 1'-0" DEPTH CU. FT.
D	E	G	H	J	L	N	P	F	CONC. MASONRY CY	STEEL LBS	F	CONC. MASONRY CY	STEEL LBS	
30"	4'-0"	4'-0"	5'-6"	3'-6"	1'-6"	2'-0"	5'-3"	3'-0"	2.60	45	4'-3"	3.16	54	55.16
36"	4'-6"	4'-3"	6'-0"	4'-0"	1'-8"	2'-3"	5'-11"	3'-6"	3.35	54	5'-0"	4.15	64	64.36
42"	5'-0"	4'-6"	6'-6"	4'-6"	1'-10"	2'-6"	6'-6"	4'-0"	4.20	59	5'-9"	5.25	70	73.70
48"	5'-6"	4'-9"	7'-0"	5'-0"	2'-0"	2'-9"	7'-2"	4'-6"	5.19	65	6'-6"	6.50	83	83.96
54"	6'-0"	5'-0"	7'-6"	5'-6"	2'-2"	3'-0"	7'-10"	5'-0"	6.26	73	7'-3"	7.88	93	94.46
60"	6'-6"	5'-3"	8'-0"	6'-0"	2'-4"	3'-3"	8'-5"	5'-6"	7.43	85	8'-0"	9.37	106	105.30
72"	7'-6"	5'-9"	9'-0"	7'-0"	2'-8"	3'-9"	9'-9"	6'-6"	10.25	98	9'-6"	12.99	128	128.92
84"	8'-6"	6'-3"	10'-0"	8'-0"	3'-0"	4'-3"	11'-0"	7'-6"	13.49	120	11'-0"	17.32	154	153.86

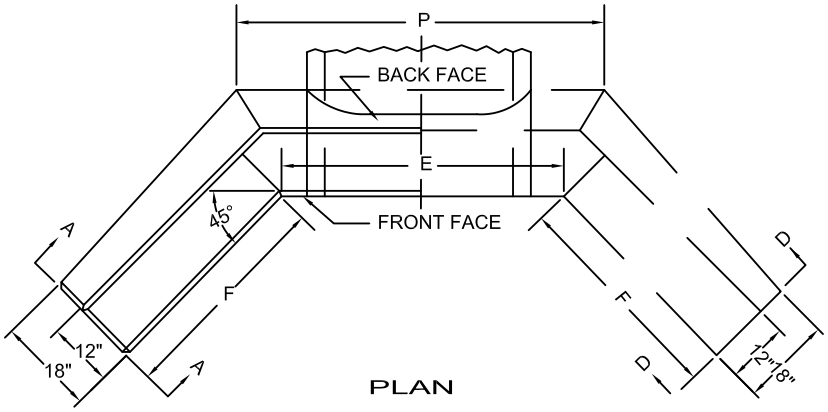

CONCRETE ENDS

FIELD STONE MASONRY ENDS

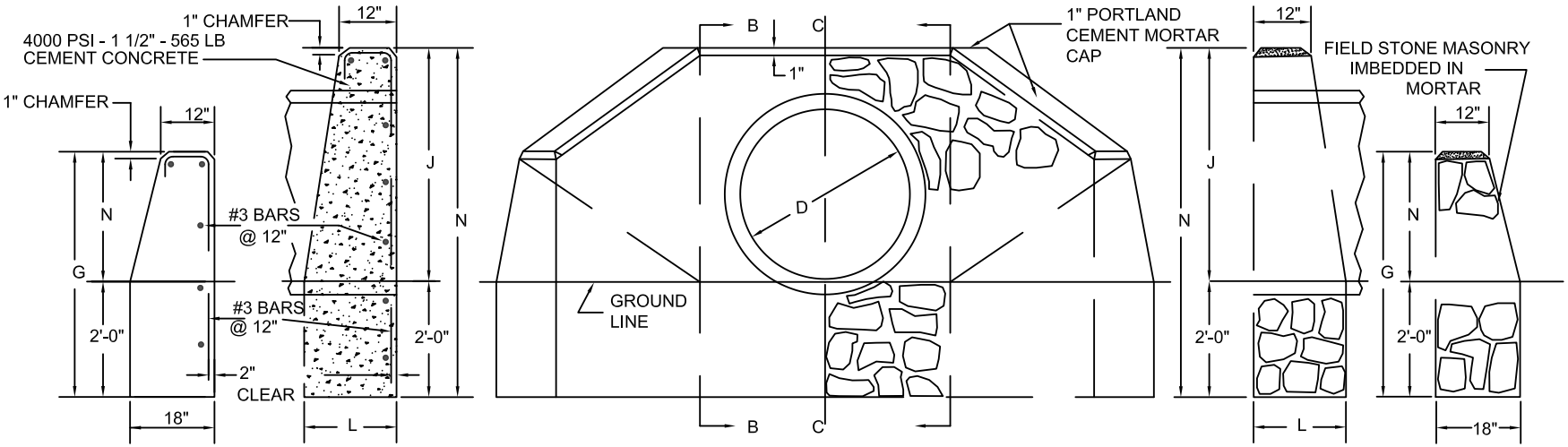

DATE OF ISSUE
MARCH 2012

DRAWING NUMBER
E 206.6.0

massDOT
Massachusetts Department of Transportation
Highway Division

CONSTRUCTION STANDARDS

STONE PIPE ENDS FOR PIPES 24" AND LESS IN DIA.

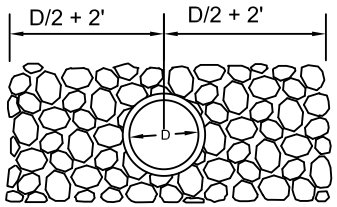

SECTION A-A

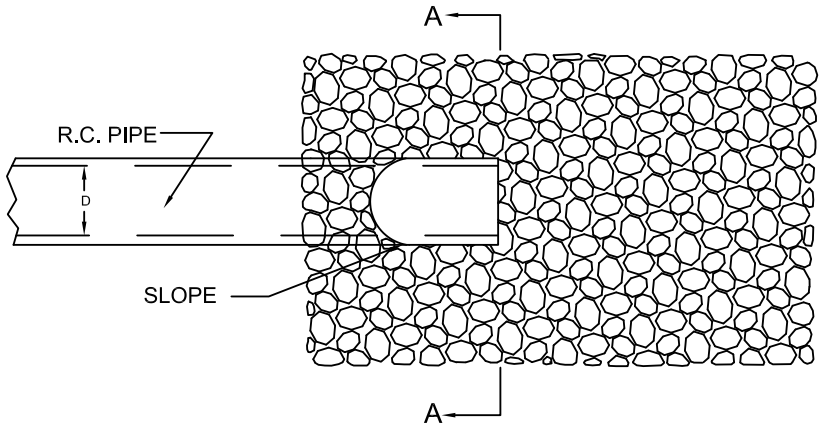

PLAN

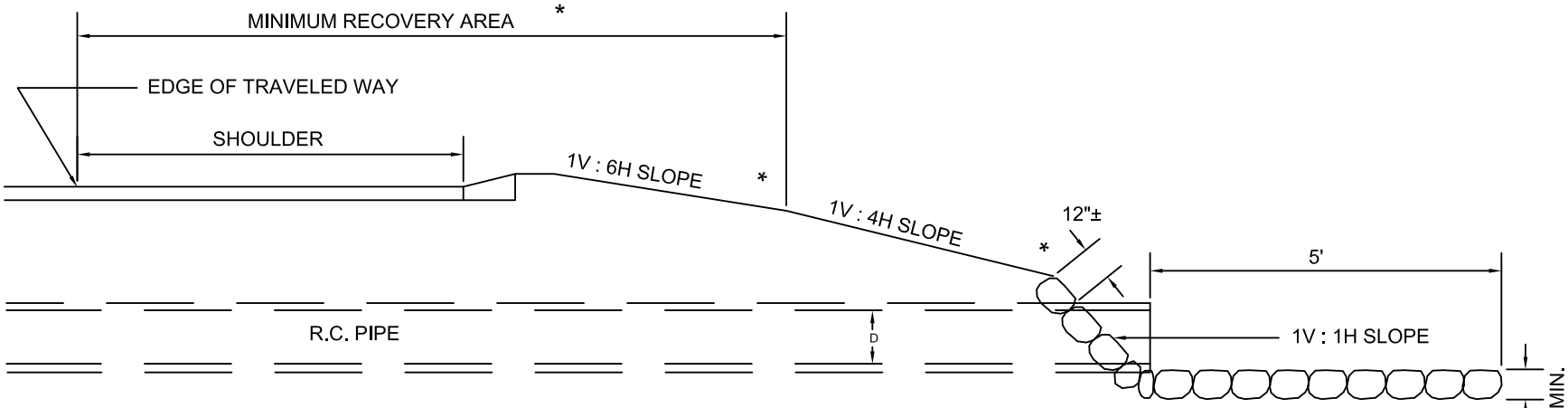

SIDE ELEVATION

* SEE TYPICAL SECTIONS.

NOTES:

1. STONE TREATMENT OF PIPE ENDS SHALL NOT BE USED IN THE VEHICLE RECOVERY AREA.
2. MINIMUM MASS PER STONE = 50 LBS; MAXIMUM MASS PER STONE = 125 LBS.
3. FOR DESCRIPTION, MATERIALS AND CONSTRUCTION METHODS, SEE STANDARD SPECIFICATIONS.

DATE OF ISSUE
MARCH 2012

DRAWING NUMBER
E 206.7.0

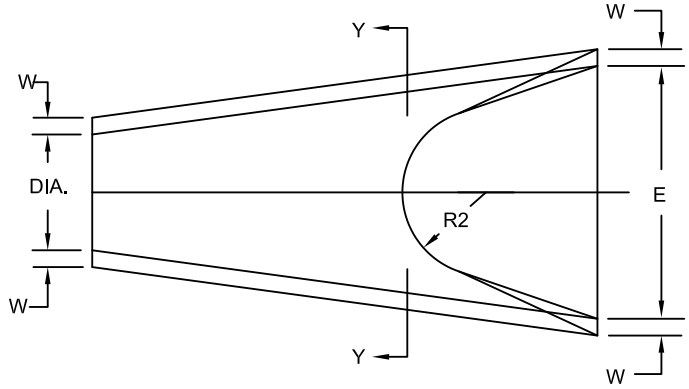

PLAN

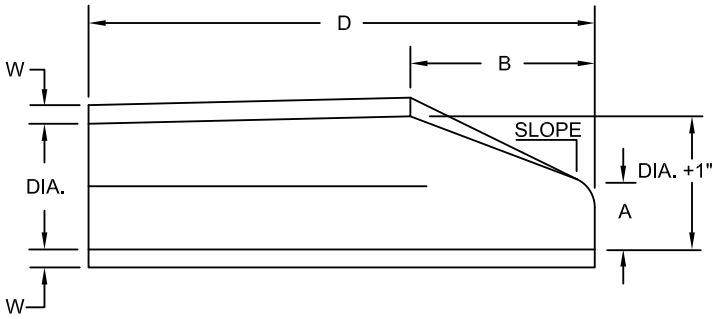

SECTION

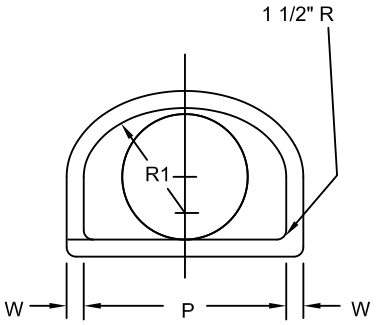

SECTION Y-Y

TABLE
[ALL DIMENSIONS ARE inches OR feet]

DIAMETER Inch	W	A	B	D	E	P	DIA. +1"	R1	R2	SLOPE
12"	2"	4"	2'-0"	6'-0"	2'-0"	19 15/16"	13"	10 1/8"	9"	1V : 3H
15"	2 1/4"	6"	2'-3"	6'-0"	2'-6"	24 5/16"	16"	12 1/2"	11"	1V : 3H
18"	2 1/2"	9"	2'-3"	6'-0"	3'-0"	29"	19"	15 1/2"	12"	1V : 3H
21"	2 3/4"	9"	2'-11"	6'-0"	3'-6"	31 5/8"	22"	16 1/8"	13"	1V : 3H
24"	3"	9 1/2"	3'-7 1/2"	6'-0"	4'-0"	33 3/16"	25"	16 13/16"	14"	1V : 3H
27"	3 1/4"	10 1/2"	4'-0"	6'-0"	4'-6"	36"	28"	18 9/16"	14 1/2"	1V : 3H
30"	3 1/2"	12"	4'-6"	6'-0"	5'-0"	37"	31"	18 1/2"	15"	1V : 3H
36"	4"	15"	5'-3"	8'-0"	6'-0"	47 13/16"	37"	24 5/16"	20"	1V : 3H
42"	4 1/2"	21"	5'-3"	8'-0"	6'-6"	53 7/8"	43"	27 1/2"	22"	1V : 3H
48"	5"	24"	6'-0"	8'-0"	7'-0"	56 1/2"	49"	28 1/2"	22"	1V : 3H

NOTES:
1. SEE STANDARD SPECIFICATIONS FOR THE TYPE OF PIPE TO BE USED (BELL & SPIGOT OR TONGUE & GROOVE)
2. SEE STANDARD SPECIFICATIONS FOR THE TYPE OF PIPE AND PLACING OF STEEL REINFORCEMENT.
3. THE JOINTS ARE TO BE COMPATIBLE WITH THE MAIN RUN OF PIPE.

massDOT Massachusetts Department of Transportation Highway Division
CONSTRUCTION STANDARDS

REINFORCED CONCRETE PIPE
FLARED ENDS

DATE OF ISSUE
MARCH 2012

DRAWING NUMBER
E 206.8.0

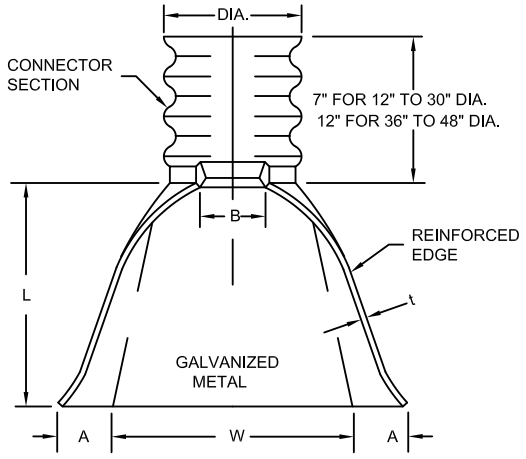

PIPE DIA. (IN)	GA.	DIMENSIONS (IN.)					APPROX. SLOPE
		A (± 1")	B (MAX.)	H (± 1")	L (±1 1/2")	W (± 2")	
12	16	6	6	6	21	24	1V : 2.5H
15	16	7	8	6	26	30	1V : 2.5H
18	16	8	10	6	31	36	1V : 2.5H
21	16	9	12	6	36	42	1V : 2.5H
24	16	10	13	6	41	48	1V : 2.5H
30	14	12	16	8	51	60	1V : 2.5H
36	14	14	19	9	60	72	1V : 2.5H
42	12	16	22	11	39	84	1V : 2.5H
48	12	18	27	12	78	90	1V : 2.25H

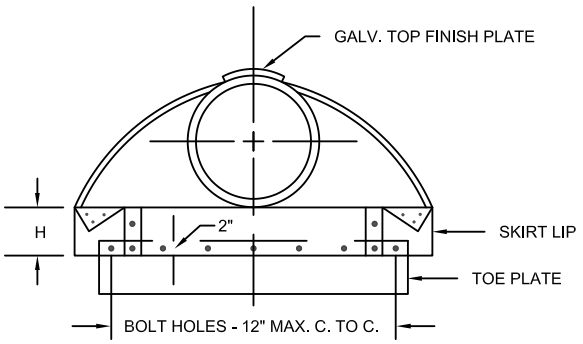

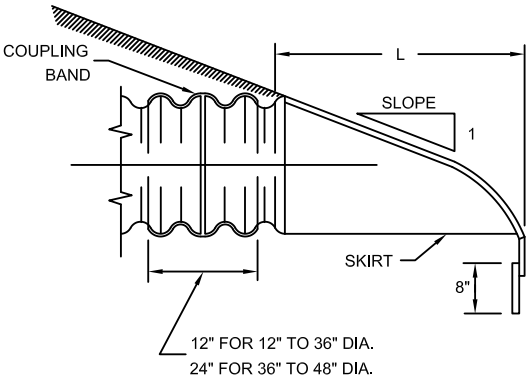

ALTERNATE CONNECTIONS

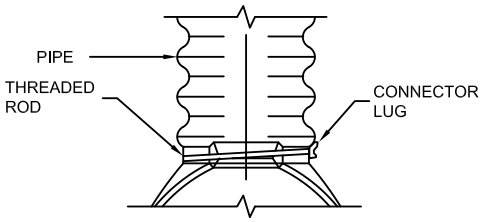

FOR 12" TO 24" ONLY

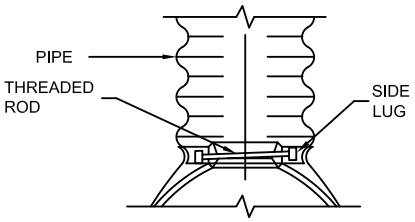

FOR 30" AND 36" ONLY

NOTES:

1. TOE PLATE TO BE PUNCHED TO MATCH HOLES IN SKIRT LIP. 3/8" Ø GALVANIZED BOLTS TO BE FURNISHED. LENGTH OF TOE PLATE TO BE W+10" FOR 12" TO 30" DIA. PIPE AND W+22" FOR 36" TO 48" DIA.
2. SKIRT SECTION FOR 12" TO 24" DIA. PIPE TO BE MADE IN ONE PIECE. SKIRT SECTION FOR 12" TO 30" DIA. PIPE MAY BE MADE FROM TWO SHEETS JOINED BY RIVETING OR BOLTING ON CENTER LINE WITH 3/8" DIA. FASTENERS.
3. CONNECTOR SECTION, TOE PLATE AND SKIRT TO BE OF SAME THICKNESS METAL; EACH TO BE GALVANIZED AND COATED WITH A TAR BASE PAINT.
4. FOR DESCRIPTION, MATERIALS AND CONSTRUCTION METHOD, SEE LATEST STANDARD SPECIFICATIONS.

massDOT Massachusetts Department of Transportation Highway Division
CONSTRUCTION STANDARDS

STANDARD METAL END

DATE OF ISSUE
MARCH 2012

DRAWING NUMBER
E 206.9.0

massDOT
Massachusetts Department of Transportation
Highway Division

CONSTRUCTION STANDARDS

CONCRETE SPLASH PADS

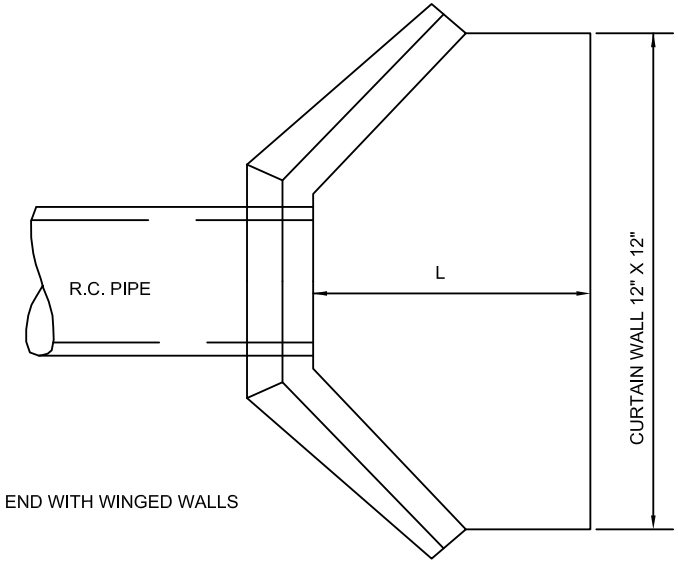

END WITH WINGED WALLS

PLAN

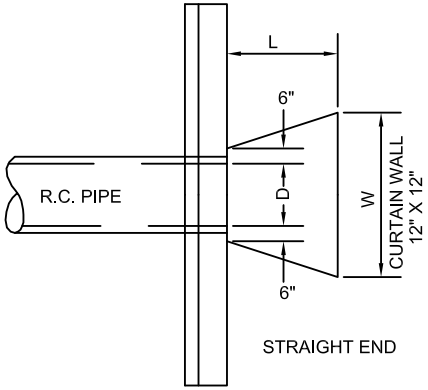

STRAIGHT END

PLAN

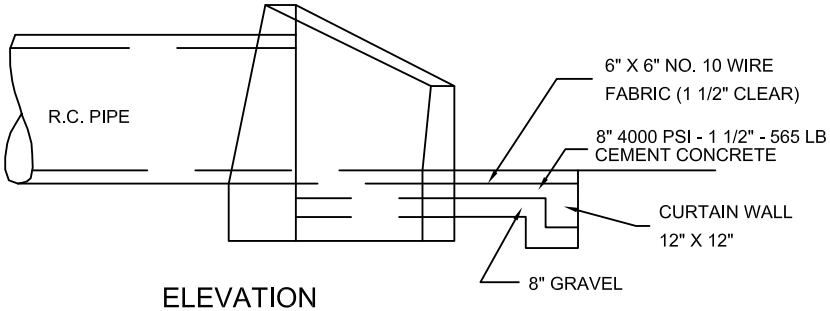

ELEVATION

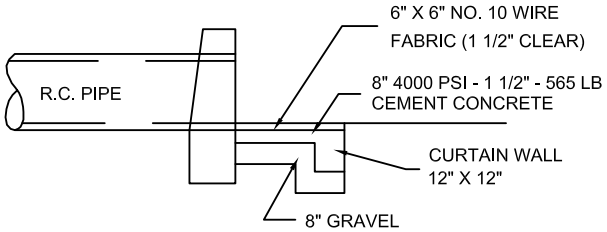

ELEVATION

PIPE DIAM. (IN)	36	42	48	54	60	66	72	84
L (FT)	6	7	8	9	10	11	12	14

PIPE DIAM. (IN)	12	15	18	21	24	30
L	3'-0"	3'-0"	3'-0"	3'-6"	4'-0"	5'-0"
W	4'-0"	4'-0"	4'-6"	5'-3"	6'-0"	7'-6"

NOTE:
1) ALL PIPE DIAMETERS NOMINAL SIZE

DATE OF ISSUE
MARCH 2012

DRAWING NUMBER
E 208.1.0

SURFACE TREATMENT:

4" PLANTABLE SOIL AND SEED OVER

8" COMPACT GRAVEL OR

4" MINIMUM DEPTH 0F PAVEMENT MILLING MULCH PLACE DIRECTLY OVER GEOTEXTILE AND CRUSHED STONE BOX

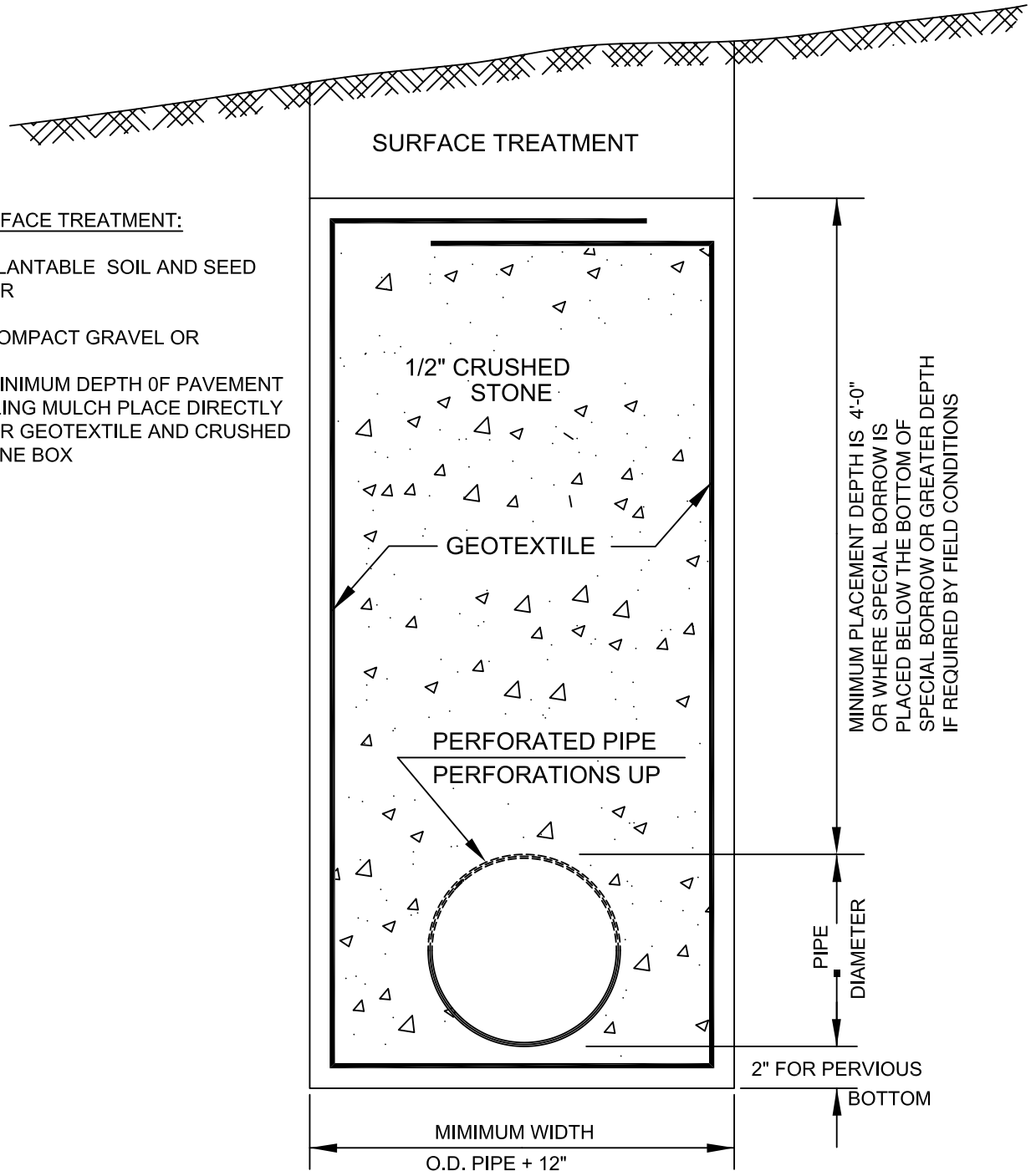

NOTES:

1. GEOTEXTILE FABRIC AS DESCRIBED IN SECTION M9.50

2. PIPE SHALL BE SET AT BOTTOM OF TRENCH FOR IMPERVIOUS BOTTOM.

3. SUBDRAIN LOCATED APPROXIMATELY AT INTERSECTION OF TANGENTS (SEE DWG. E102.1.0)

4. GRAVEL (AND SPECIAL BORROW WHERE REQUIRED) SHALL INTERSECT CRUSHED STONE FOR SUBDRAIN

massDOT Massachusetts Department of Transportation Highway Division CONSTRUCTION STANDARDS	SUBDRAIN	DATE OF ISSUE MARCH 2012
		DRAWING NUMBER **E 209.1.0**

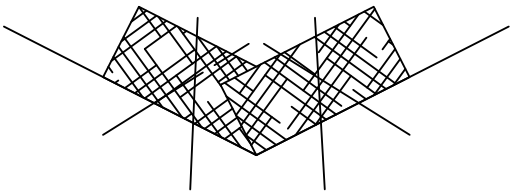

V DITCH

CROSS SECTION

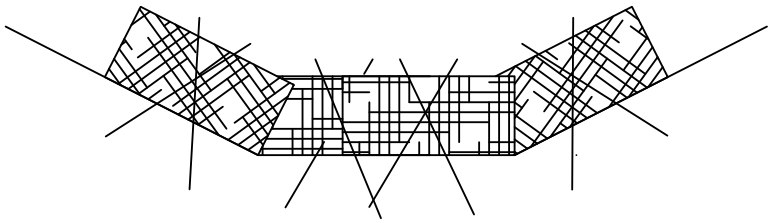

FLAT DITCH

CROSS SECTION

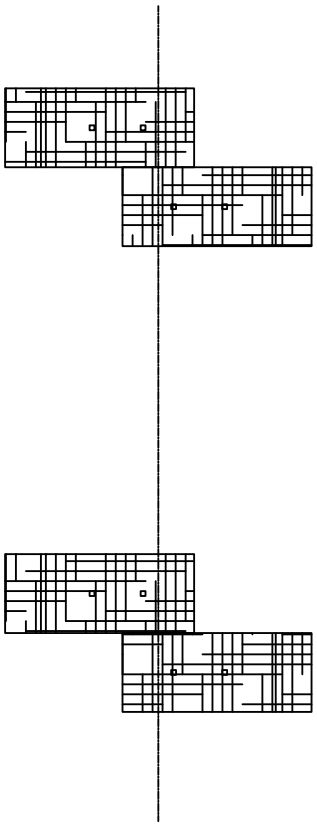

V DITCH

PLAN

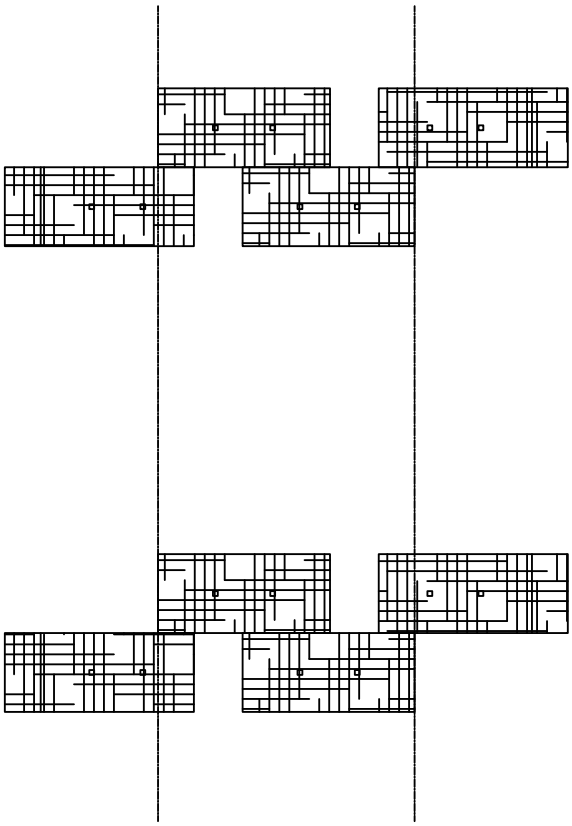

FLAT DITCH

PLAN

massDOT Massachusetts Department of Transportation Highway Division

CONSTRUCTION STANDARDS

DITCH CHECK DAMS FOR EROSION CONTROL

DATE OF ISSUE

MARCH 2012

DRAWING NUMBER

E 210.2.0

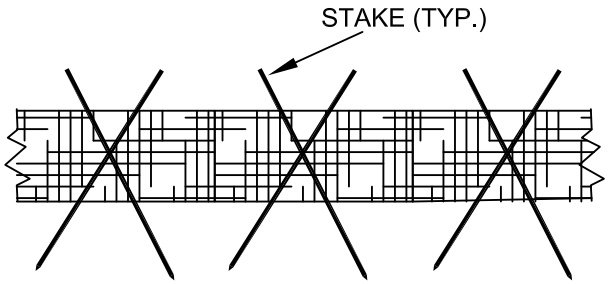

SECTION A-A

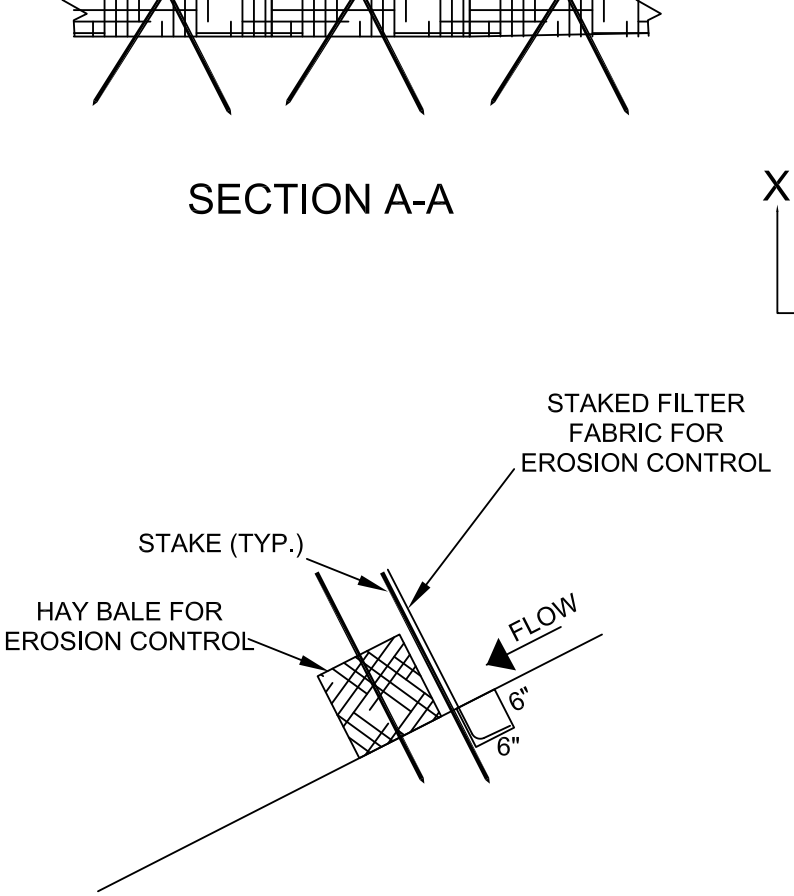

6" X 6" TRENCH LAY FILTER FABRIC IN TRENCH
END UP SLOPE AND BACK FILL

SECTION X-X

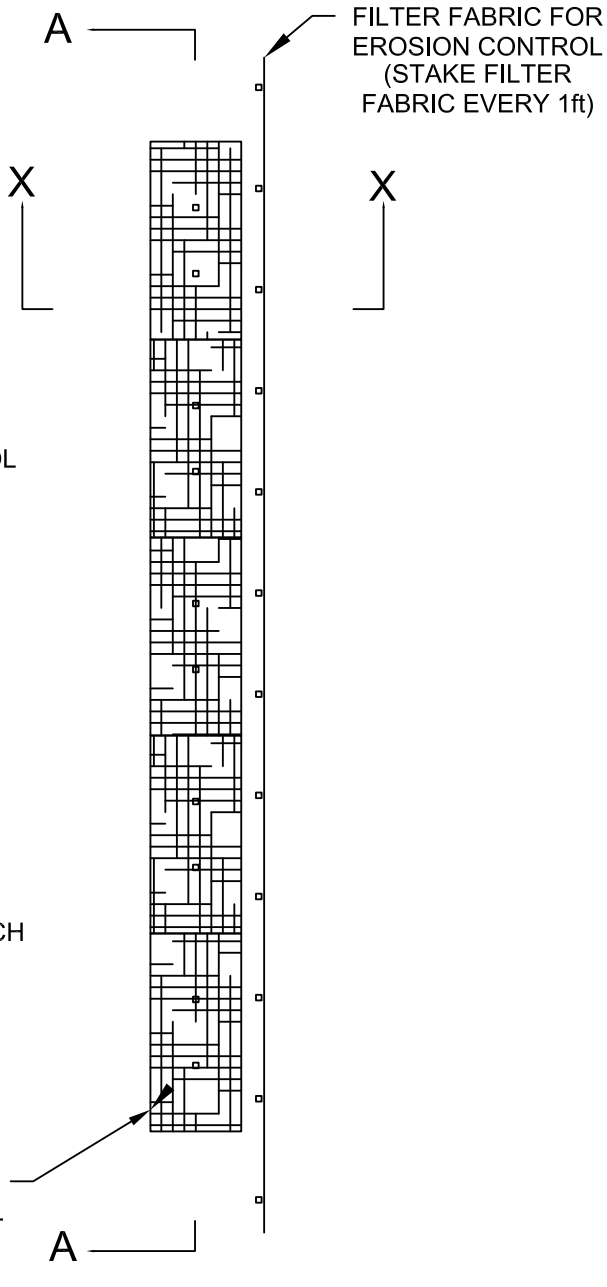

massDOT Massachusetts Department of Transportation Highway Division
CONSTRUCTION STANDARDS

HAY BALES AND
SILT FENCES
FOR EROSION CONTROL

DATE OF ISSUE
MARCH 2012

DRAWING NUMBER
E 210.3.0

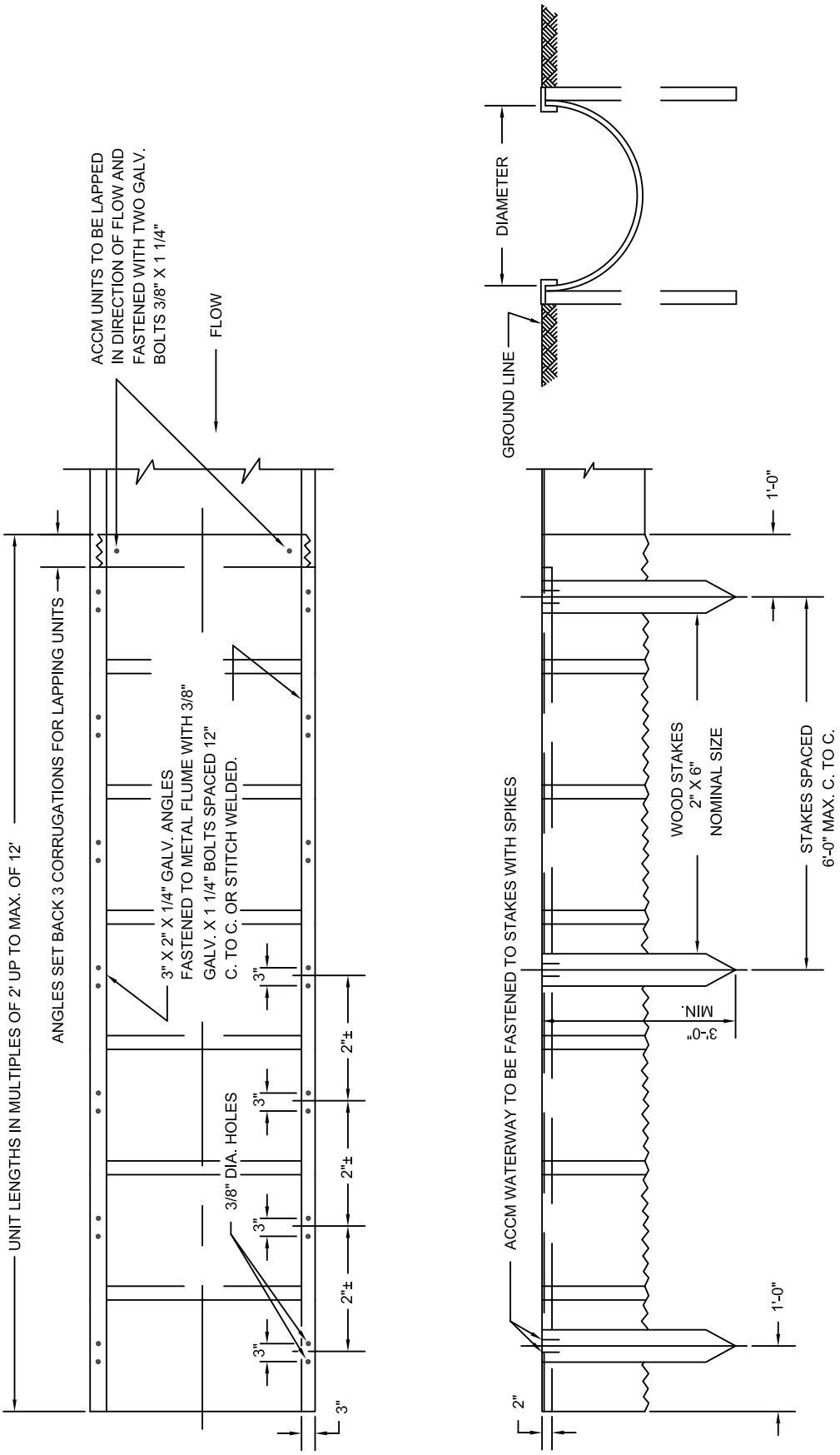

NOTE:
1. DIAMETER OF HALF CCM PIPE WATERWAY TO BE AS SPECIFIED.
2. FOR DESCRIPTION, MATERIALS AND CONSTRUCTION METHODS, SEE STANDARD SPECIFICATIONS.

massDOT
Massachusetts Department of Transportation
Highway Division
CONSTRUCTION STANDARDS

HALF CIRCLE CCM PIPE WATERWAYS

DATE OF ISSUE
MARCH 2012

DRAWING NUMBER
E 211.1.0

massDOT
Massachusetts Department of Transportation
Highway Division

CONSTRUCTION STANDARDS

PAVED WATERWAYS AND APRON

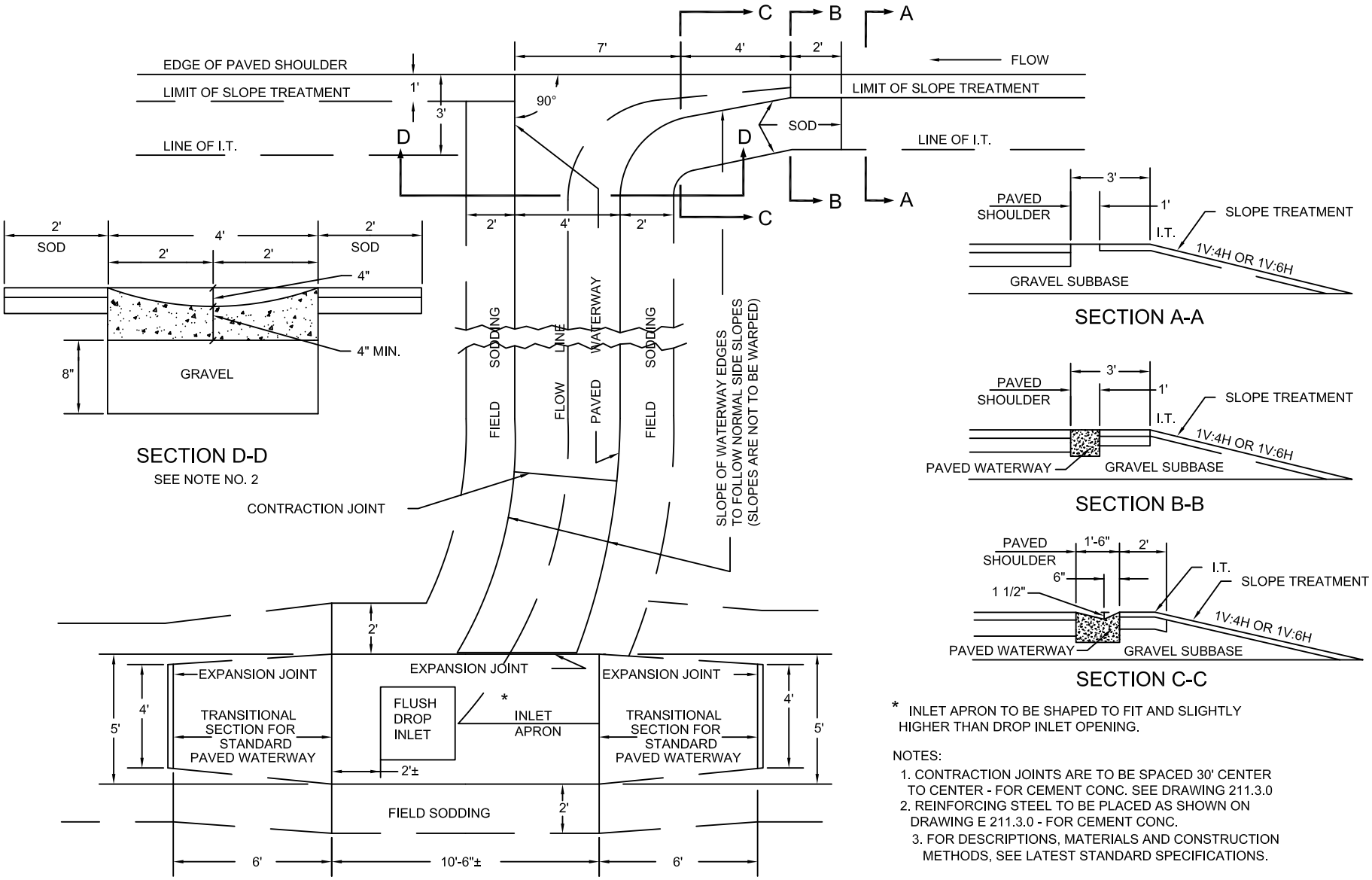

* INLET APRON TO BE SHAPED TO FIT AND SLIGHTLY HIGHER THAN DROP INLET OPENING.

NOTES:

1. CONTRACTION JOINTS ARE TO BE SPACED 30' CENTER TO CENTER - FOR CEMENT CONC. SEE DRAWING 211.3.0
2. REINFORCING STEEL TO BE PLACED AS SHOWN ON DRAWING E 211.3.0 - FOR CEMENT CONC.
3. FOR DESCRIPTIONS, MATERIALS AND CONSTRUCTION METHODS, SEE LATEST STANDARD SPECIFICATIONS.

DATE OF ISSUE
MARCH 2012

DRAWING NUMBER
E 211.2.0

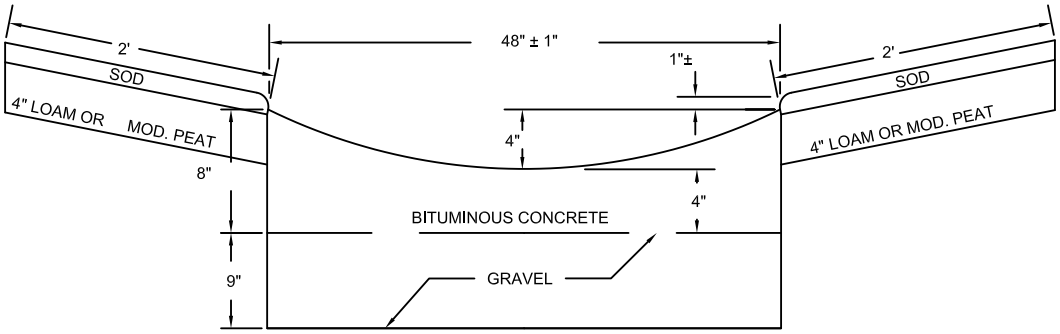

BITUMINOUS CONCRETE

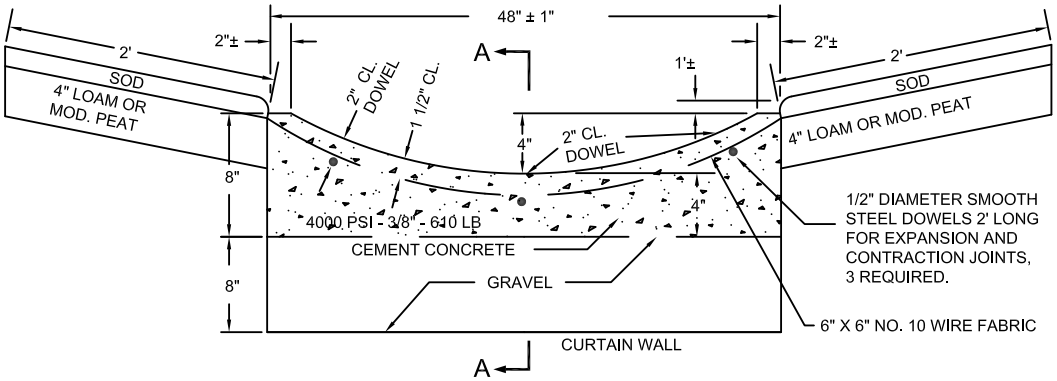

CEMENT CONCRETE

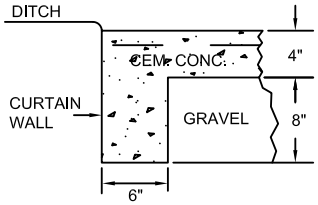

CURTAIN WALL TO BE INSTALLED AT TERMINI OF PAVING

SECTION A-A

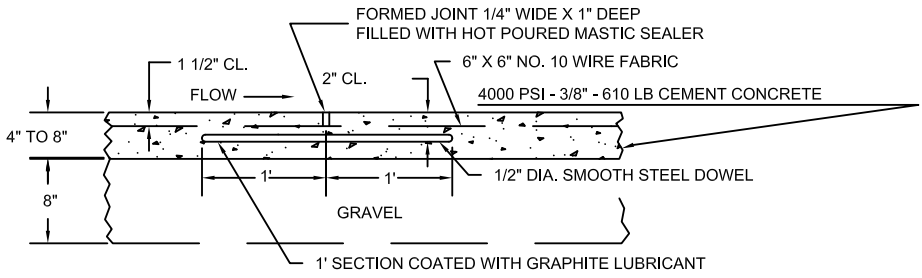

CONTRACTION JOINT TO BE PLACED 30' MAXIMUM CENTER TO CENTER

DETAILS OF CONTRACTION JOINTS

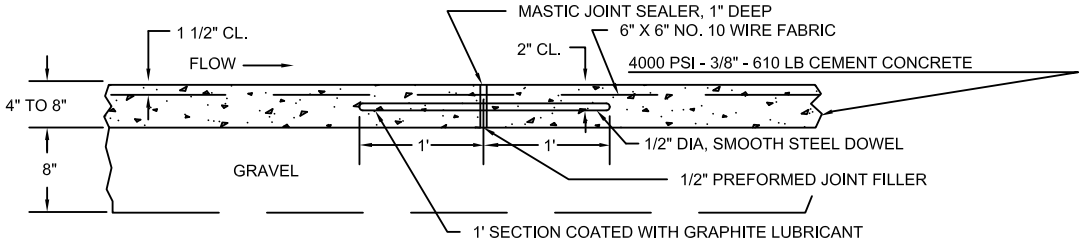

EXPANSION JOINTS TO BE INSTALLED AT APPROACHES TO STRUCTURES

DETAILS OF EXPANSION JOINTS

NOTES:

1. ON CURVED ALIGNMENT, WATERWAYS SHALL BE BANKED AS DIRECTED.
2. FOR DESCRIPTIONS, MATERIALS AND CONSTRUCTION METHODS, SEE LATEST STANDARD SPECIFICATIONS.

massDOT Massachusetts Department of Transportation Highway Division

CONSTRUCTION STANDARDS

PAVED WATERWAYS

DATE OF ISSUE
MARCH 2012

DRAWING NUMBER
E 211.3.0

H (FT)	W (FT)	D (FT)	CONCRETE MASONRY FOOTING		STONE MASONRY EXCLUDING COPING	
			SECTION AREA (SQ. FT.)	VOLUME PER UNIT LENGTH (CU.YD./LIN.FT)	SECTION AREA (SQ. FT.)	VOLUME PER UNIT LENGTH (CU.YD./LIN.FT)
5.0	0.75	1.25	4.06	0.150	9.00	0.333
5.5			4.38	0.162	10.63	.394
6.0			4.69	0.48	12.38	0.458
6.5			5.00	0.185	14.16	0.524
7.0			5.31	0.197	16.05	0.594
7.5			5.63	0.208	18.06	0.669
8.0	1.0	1.5	7.50	0.278	20.16	0.747
8.5			7.88	0.292	22.40	0.829
9.0			8.25	0.306	27.22	1.008
9.5			8.63	0.319	3.31	3.31
10.0	1.2	2.0	12.40	0.459	29.80	1.104
10.5			12.90	0.478	32.50	1.204
11.0			13.40	0.496	35.28	1.307
11.5			13.90	0.515	38.21	1.415
12.0			14.40	0.533	41.25	1.528
12.5			14.90	0.552	44.41	1.645
13.0	1.5	2.5	20.00	0.741	47.68	1.766
13.5			20.63	0.764	51.07	1.891
14.0			21.25	0.787	54.53	2.020
14.5			21.88	0.810	58.14	2.153
15.0			22.50	0.833	61.88	2.292
15.5			23.13	0.856	65.72	2.434
16.0			23.75	0.880	69.68	2.581
16.5	1.8	3.0	30.15	1.117	73.76	2.732
17.0			30.90	1.144	77.90	2.885
17.5			31.65	1.172	82.21	3.045
18.0			32.40	1.200	86.63	3.208
18.5			33.15	1.228	91.38	3.384
19.0			33.90	1.256	96.25	3.565
19.5			34.65	1.283	101.25	3.750
20.0			35.40	1.311	106.38	3.940
20.5			36.15	1.339	111.63	4.134
21.0			36.90	1.367	117.00	4.333
21.5			37.65	1.394	122.50	4.537
22.0			38.40	1.422	128.13	4.745
22.5			39.15	1.450	133.88	4.958
23.0			39.90	1.478	139.75	5.176
23.5			40.65	1.506	145.75	5.398
24.0			41.40	1.533	151.88	5.625
24.5			42.15	1.561	158.13	5.856
25.0			42.90	1.589	164.50	6.093
25.5			43.65	1.617	171.00	6.333
26.0			44.40	1.644	177.63	6.579
26.5			45.15	1.672	184.38	6.829

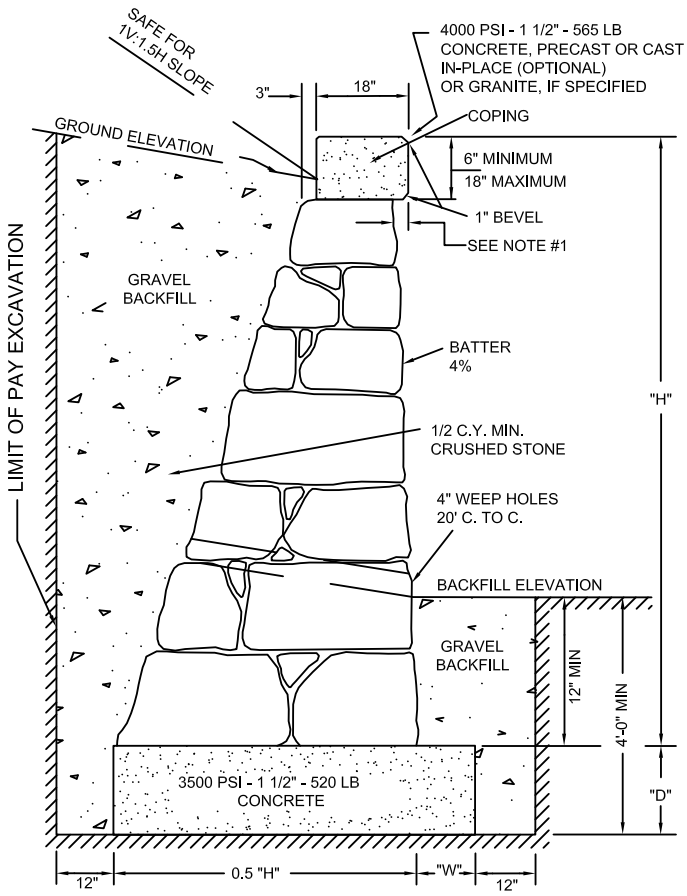

COPING TO BE PRECAST CONCRETE OR GRANITE OF UNIFORM DEPTH FOR THE ENTIRE LENGTH. DEPTH OF CONCRETE TO BE 1/12 THE AVERAGE "H" WITHIN THE LIMITS SHOWN. DEPTH OF GRANITE TO BE AS SHOWN ON THE PLANS, 6" OR 9".

FOR CHAIN LINK FENCE ON TOP OF WALL, THE COPING SHALL BE CONCRETE CAST-IN-PLACE WITH A MINIMUM DEPTH OF 12". THE LENGTH OF GALVANIZED PIPE SLEEVES FOR FENCE POSTS SHALL BE EQUAL TO THE DEPTH OF COPING.

NOTES:

1. COPING OVERHANG TO BE APPROXIMATELY 3" FOR WALLS 10' OR MORE IN HEIGHT AND APPROXIMATELY 2" FOR WALLS LESS THAN 10' IN HEIGHT; IN A CONTINUOUS WALL OF VARYING HEIGHT THE OVERHANG WILL BE APPROXIMATELY 2" TO 3" FOR THE ENTIRE LENGTH.
2. ALL DIMENSIONS SHOWN ARE MINIMUM.
3. PAYMENT WILL BE BASED ON THE ACCOMPANYING TABLE.
4. TO BE FOUNDED ON SUITABLE SOIL

massDOT Massachusetts Department of Transportation Highway Division
CONSTRUCTION STANDARDS

CEMENTED STONE MASONRY WALL

DATE OF ISSUE
MARCH 2012

DRAWING NUMBER
E 302.2.0

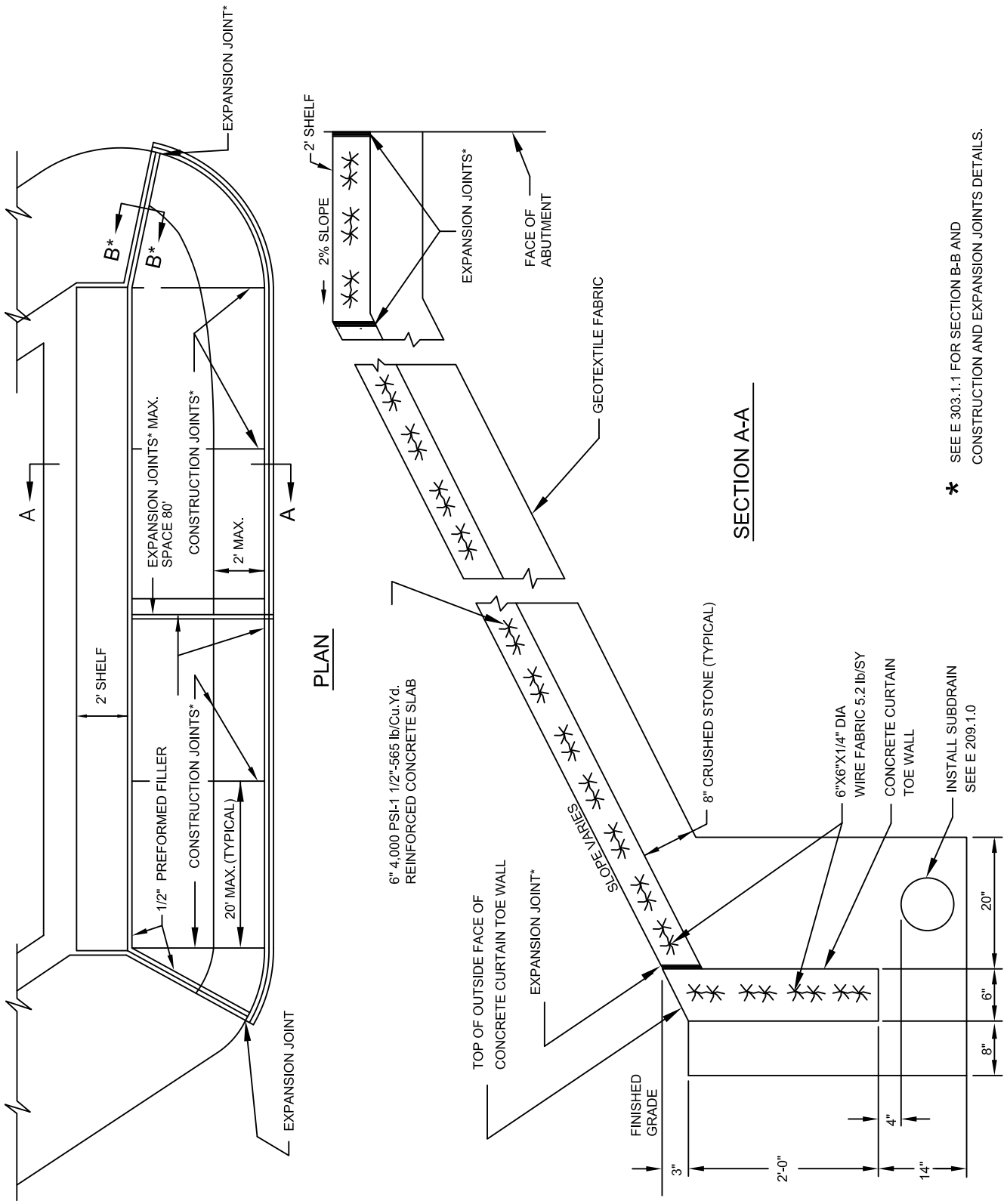

massDOT
Massachusetts Department of Transportation
Highway Division
CONSTRUCTION STANDARDS

SPECIAL SLOPE PAVING UNDER BRIDGES

REINFORCED CONCRETE SLAB

DATE OF ISSUE
MARCH 2012

DRAWING NUMBER
E 303.1.0

massDOT
Massachusetts Department of Transportation
Highway Division

CONSTRUCTION STANDARDS

SPECIAL SLOPE PAVING UNDER BRIDGES

REINFORCED CONCRETE SLAB DETAILS

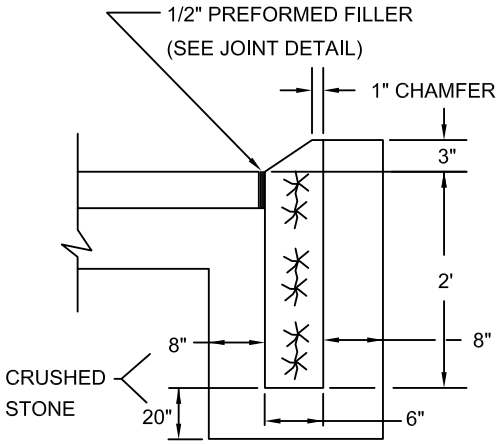

CURTAIN WALL ON SIDES OF SLABS SECTION B-B

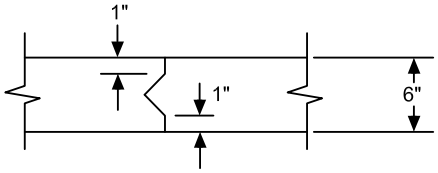

CONSTRUCTION JOINT DETAIL

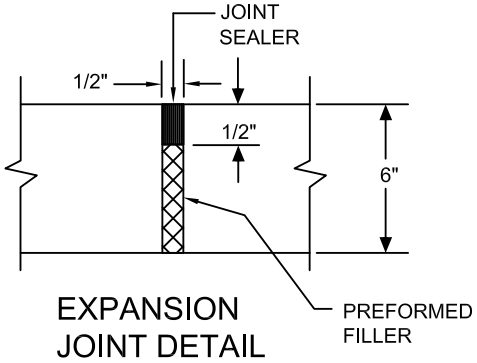

EXPANSION JOINT DETAIL

NOTES:

1. WIRE FABRIC TO HAVE 12" MINIMUM LAP AT SPLICE AND SHOULD EXTEND WITHIN 3" OF ALL EDGES
2. SLAB SHALL BE GROOVED PARALLEL TO AND NORMAL TO THE CURTAIN TOE WALL AT APPROXIMATELY 6' GRIDS. THE GROOVE DEPTH SHALL BE 1"
3. FOR LIMITS OF SLOPE PAVING SEE BRIDGE MANUAL.
4. CONCRETE SHALL BE 4000 psi-1 1/2"-565 lb/Cu.Yd.
5. EXTEND GEOTEXTILE FABRIC BENEATH CRUSHED STONE FROM TOP OF CONCRETE CURTAIN TOE WALL TO FACE OF ABUTMENT.
6. SEE E 303.1.0 FOR SLAB PLAN AND SECTION.

DATE OF ISSUE
MARCH 2012

DRAWING NUMBER
E 303.1.1

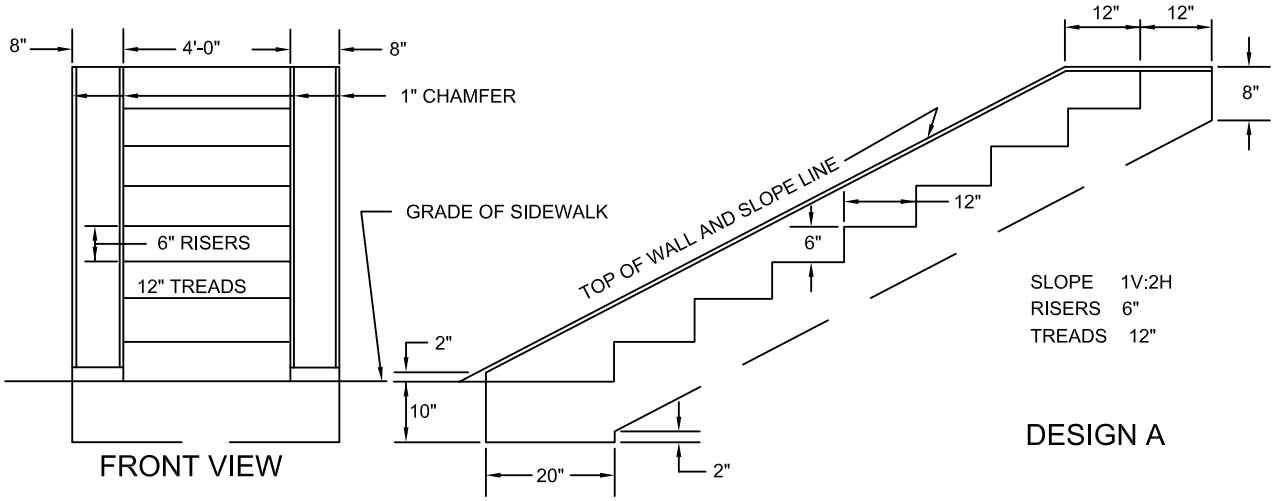

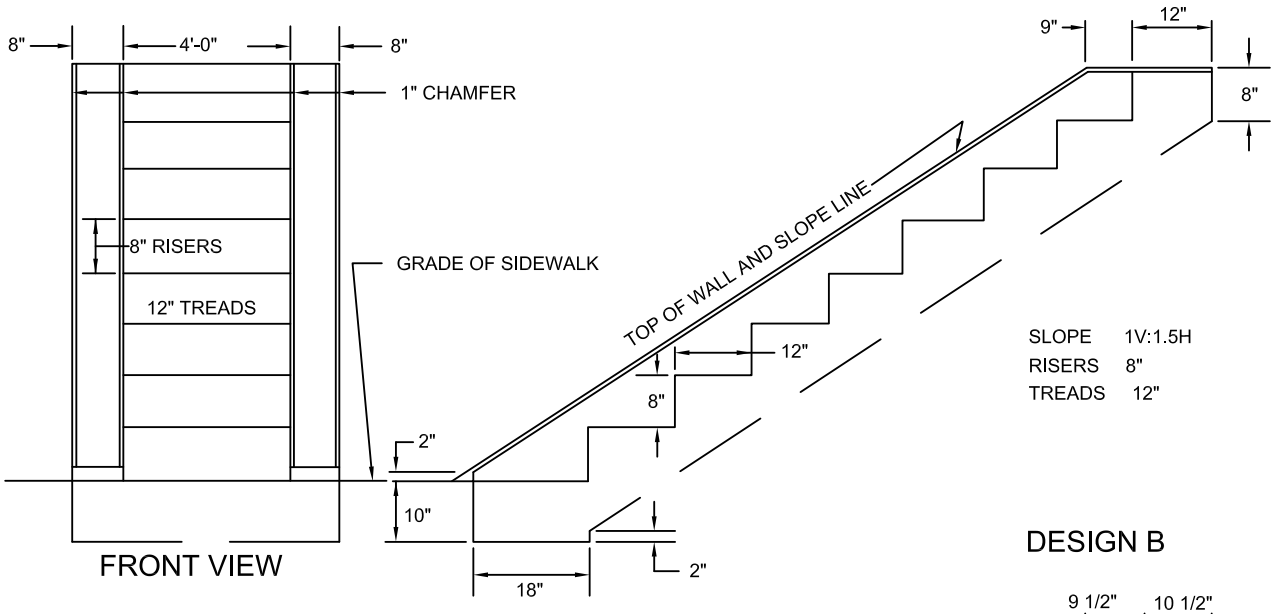

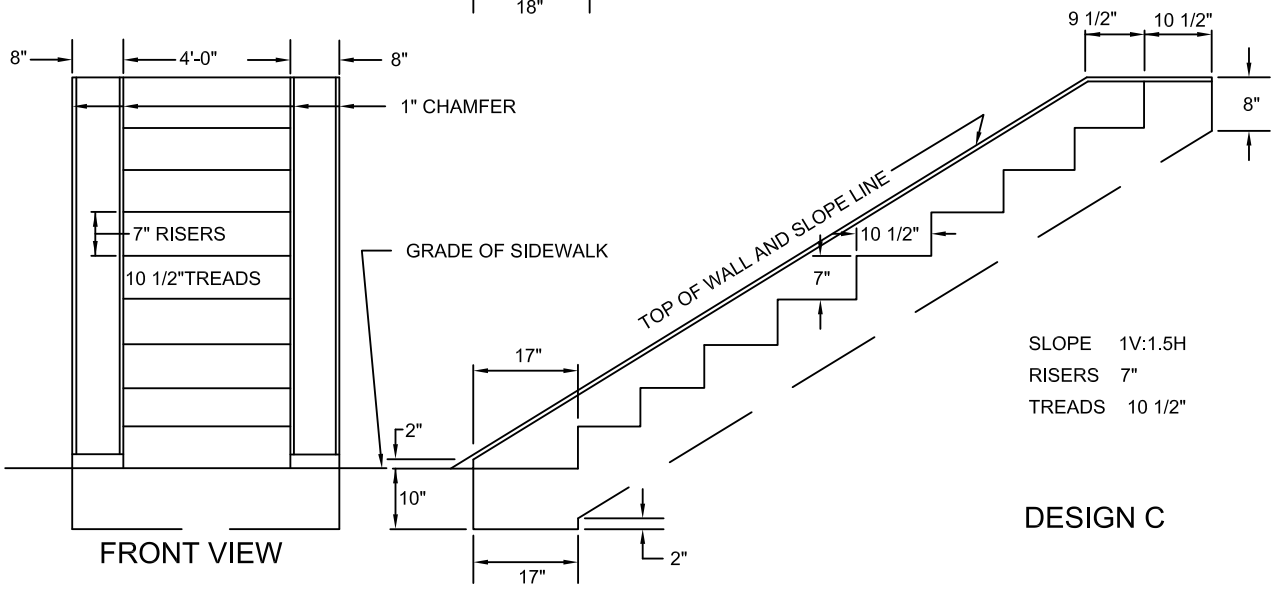

NOTES:

1. ALL CONCRETE DIMENSIONS SHOWN ARE MINIMUM EXCEPT RISERS AND TREADS WHICH HAVE 1/4" TOLERANCE.
2. FOR REINFORCING STEEL AND CONCRETE QUANTITIES SEE DRAWING E 304.2.0

massDOT Massachusetts Department of Transportation Highway Division CONSTRUCTION STANDARDS	CEMENT CONCRETE STEPS 1/2	DATE OF ISSUE MARCH 2012 DRAWING NUMBER **E 304.1.0**

massDOT Massachusetts Department of Transportation Highway Division

CONSTRUCTION STANDARDS

CEMENT CONCRETE STEPS 2/2

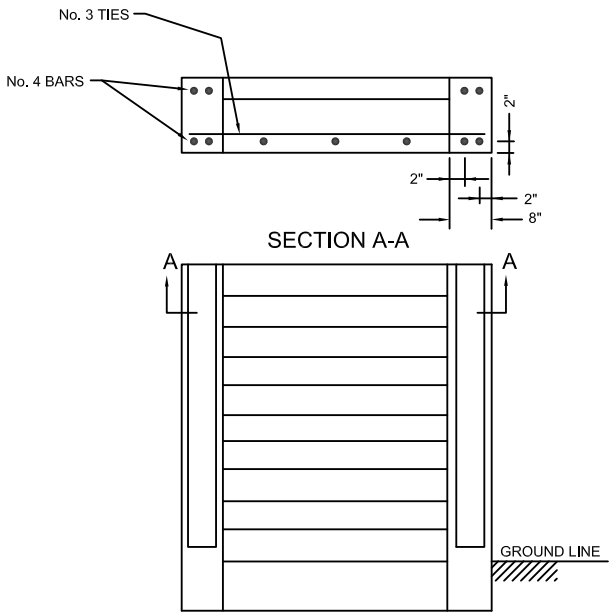

FRONT VIEW

NOTES:

1. FOR DESCRIPTIONS , MATERIALS AND CONSTRUCTION METHODS SEE STANDARD SPECIFICATIONS.
2. PAYMENT WILL BE BASED ON THE QUANTITIES SHOWN IN THE ACCOMPANYING TABLES.
3. RAILING AS REQUIRED BY AAB AND STATE BUILDNG CODE

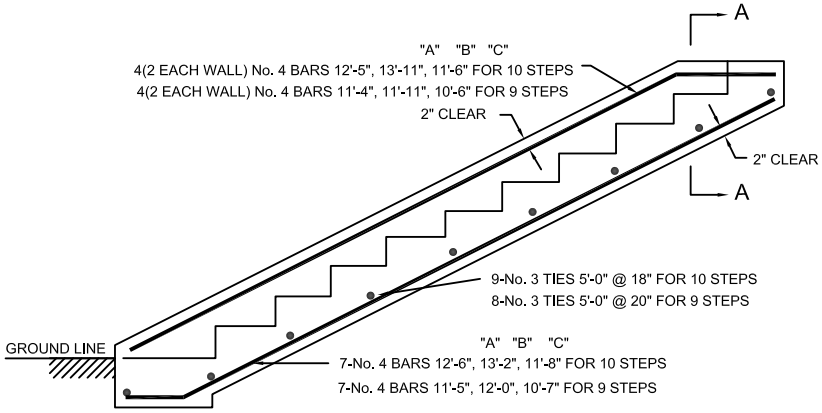

SIDE VIEW

FOR DESIGNS "A", "B" AND "C" SEE DRAWING E 304.1.0

	DESIGN A						DESIGN B						DESIGN C					
STEP NOS.	QUANTITIES - CU. FT.				TOTAL C.Y.	REINF. STEEL LBS	QUANTITIES - CU. FT.				TOTAL C.Y.	REINF. STEEL LBS	QUANTITIES - CU. FT.				TOTAL C.Y.	REINF. STEEL LBS
	BASE	STEPS	2-WALLS	TOTAL			BASE	STEPS	2-WALLS	TOTAL			BASE	STEPS	2-WALLS	TOTAL		
2	5.55	7.33	6.26	19.15	0.71	--	5.00	8.00	6.53	19.53	0.72	--	4.72	6.71	5.65	17.08	0.63	--
3	5.55	11.00	8.48	25.03	0.93	--	5.00	12.00	8.97	25.97	0.96	--	4.72	10.06	7.69	22.48	0.83	--
4	5.55	14.66	10.70	30.92	1.15	--	5.00	16.00	11.42	32.42	1.20	--	4.72	13.42	9.73	27.87	1.03	--
5	5.55	18.33	12.92	36.81	1.36	--	5.00	20.00	13.86	38.86	1.44	--	4.72	16.77	11.78	33.27	1.23	--
6	5.55	22.00	15.15	42.70	1.58	--	5.00	24.00	16.30	45.30	1.68	--	4.72	20.12	13.82	38.66	1.43	--
7	5.55	25.66	17.37	48.59	1.80	--	5.00	28.00	18.75	51.75	1.92	--	4.72	23.48	15.86	44.06	1.63	--
8	5.55	29.33	19.59	54.47	2.02	--	5.00	32.00	21.19	58.19	2.16	--	4.72	26.83	17.90	49.46	1.83	--
9	5.55	33.00	21.81	60.36	2.24	99	5.00	36.00	23.64	64.64	2.39	103	4.72	30.19	19.94	54.85	2.03	92
10	5.55	36.66	24.03	66.25	2.45	109	5.00	40.00	26.08	71.08	2.63	113	4.72	33.54	22.00	60.25	2.23	102

ALL CONCRETE SHALL BE 4000 PSI - 1 1/2" - 565 LB

DATE OF ISSUE
MARCH 2012

DRAWING NUMBER
E 304.2.0

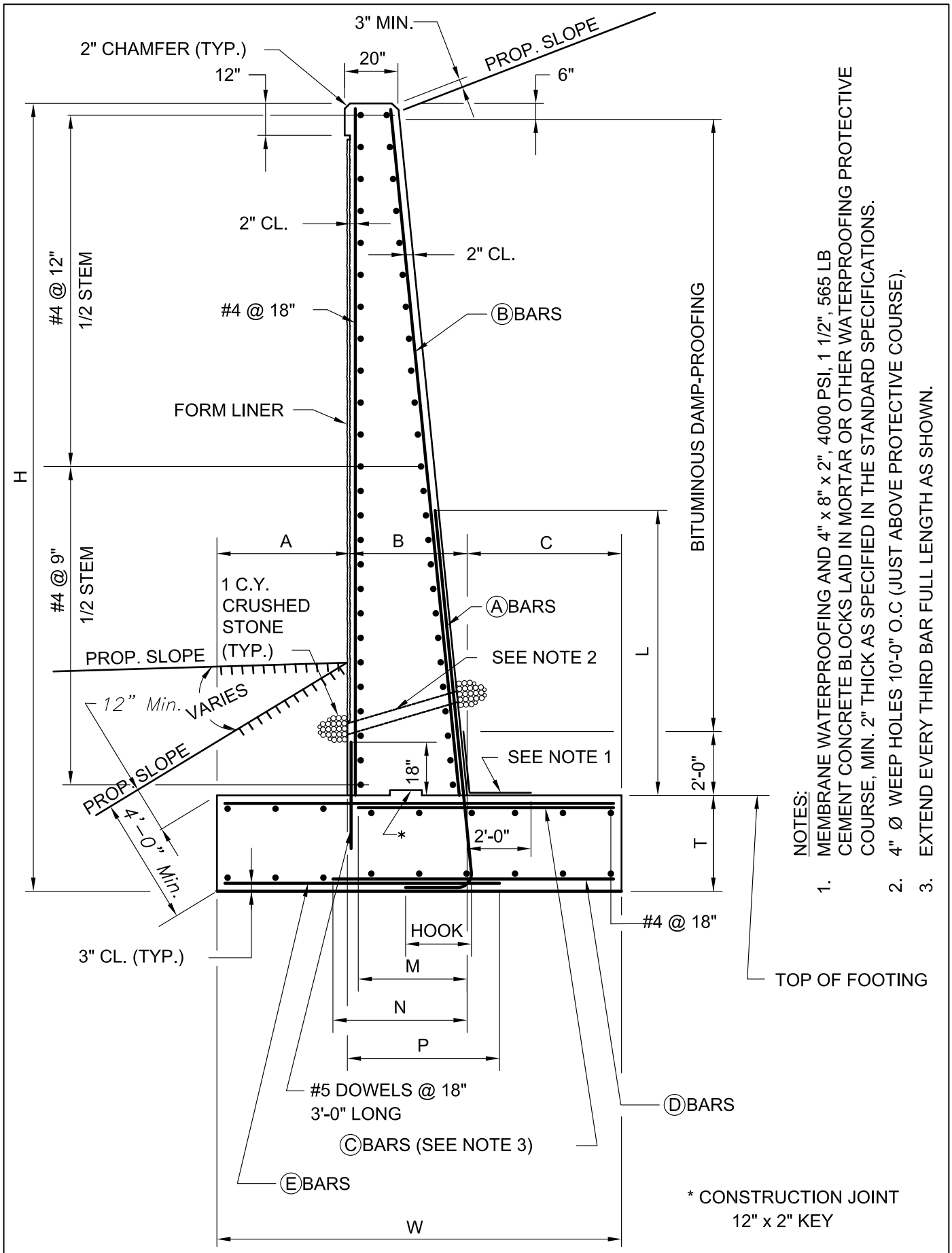

NOTES:

1. MEMBRANE WATERPROOFING AND 4" x 8" x 2", 4000 PSI, 1 1/2", 565 LB CEMENT CONCRETE BLOCKS LAID IN MORTAR OR OTHER WATERPROOFING PROTECTIVE COURSE, MIN. 2" THICK AS SPECIFIED IN THE STANDARD SPECIFICATIONS.
2. 4" Ø WEEP HOLES 10'-0" O.C (JUST ABOVE PROTECTIVE COURSE).
3. EXTEND EVERY THIRD BAR FULL LENGTH AS SHOWN.

massDOT
Massachusetts Department of Transportation
Highway Division
CONSTRUCTION STANDARDS

TYPICAL CANTILEVER RETAINING WALL SECTION

DATE OF ISSUE
MARCH 2012

DRAWING NUMBER
E 305.1.0

massDOT
Massachusetts Department of Transportation
Highway Division

CONSTRUCTION STANDARDS

CANTILEVER RETAINING WALLS DENSE FOUNDATION SOILS, SLOPING BACKFILL

TABLE OF DIMENSIONS AND REINFORCING STEEL

H	14.0	15.0	16.0	17.0	18.0	19.0	20.0	21.0	22.0	23.0	24.0	25.0	26.0	27.0	28.0	29.0	30.0
W	8.500	9.000	10.000	10.500	11.000	12.000	12.500	13.000	13.500	14.000	15.000	15.500	16.500	17.500	18.000	19.000	20.000
T	2.000	2.000	2.000	2.000	2.000	2.000	2.500	2.500	3.000	3.000	3.500	3.500	4.000	4.000	4.500	4.500	5.000
A	1.500	1.500	2.000	2.000	1.500	2.000	2.000	2.000	2.000	2.000	2.500	2.500	3.000	3.500	4.000	4.500	5.000
B	2.500	2.583	2.667	2.750	2.833	2.917	2.958	3.042	3.083	3.167	3.208	3.292	3.333	3.417	3.458	3.542	3.583
C	4.500	4.917	5.333	5.750	6.667	7.083	7.542	7.958	8.417	8.833	9.292	9.708	10.167	10.583	10.542	10.958	11.417
L	3.600	3.900	5.600	6.000	8.000	8.500	8.750	9.250	9.500	12.000	12.300	12.900	13.200	13.800	14.100	14.700	15.000
M	1.917	2.500	3.167	4.083	5.000	5.000	5.000	5.000	5.000	5.000	5.000	5.000	5.000	5.000	5.000	5.000	5.000
N	1.000	1.000	1.000	1.000	1.250	1.250	1.250	1.250	1.250	1.500	1.500	1.500	1.917	1.917	1.917	1.917	1.917
P	1.000	1.000	1.250	1.250	1.000	1.250	1.250	1.250	1.250	1.250	1.250	1.250	1.500	1.917	1.917	2.500	2.500
HOOK	1.000	1.167	1.167	1.333	1.333	1.583	1.583	1.833	1.833	1.833	2.000	2.000	1.583	1.583	1.583	1.583	1.833
A bars	6 @ 12	7 @ 12	7 @ 12	8 @ 12	8 @ 12	9 @ 12	9 @ 12	10 @ 12	10 @ 12	10 @ 12	11 @ 12	11 @ 12	9 @ 6	9 @ 6	9 @ 6	9 @ 6	10 @ 6
B bars	4 @ 12	4 @ 12	4 @ 12	4 @ 12	4 @ 12	4 @ 12	4 @ 12	4 @ 12	4 @ 12	4 @ 12	4 @ 12	4 @ 12	4 @ 12	4 @ 12	4 @ 12	4 @ 12	4 @ 12
C bars	7 @ 18	8 @ 18	9 @ 18	10 @ 18	11 @ 17	11 @ 14	11 @ 15.5	11 @ 13	11 @ 13.5	11 @ 12	11 @ 12	11 @ 10.5	11 @ 10.5	11 @ 9.5	11 @ 10.5	11 @ 9.5	11 @ 9.5
D bars	4 @ 18	4 @ 18	4 @ 18	4 @ 18	5 @ 18	5 @ 18	5 @ 18	5 @ 18	5 @ 18	6 @ 18	6 @18	6 @ 18	7 @ 18	7 @ 18	7 @ 18	7 @ 18	7 @ 18
E bars	4 @ 18	4 @ 18	5 @ 18	5 @ 18	4 @ 18	5 @ 18	5 @ 18	5 @ 18	5 @ 18	5 @ 18	5 @ 18	5 @ 18	6 @ 18	7 @ 18	7 @ 18	8 @ 18	8 @ 18

Quantities of Materials

Stem Concrete (yd^3/ft)	0.9	1.0	1.1	1.2	1.3	1.4	1.4	1.6	1.6	1.7	1.8	1.9	2.0	2.1	2.2	2.3	2.4
Footing Concrete (yd^3/ft)	0.6	0.7	0.7	0.8	0.8	0.9	1.2	1.2	1.5	1.6	2.0	2.0	2.5	2.6	3.0	3.2	3.7
Steel (lb/ft)	98	117	152	171	200	233	243	280	292	399	454	470	488	510	524	550	631

Maximum Soil Bearing Pressure

Q_{max} (psf)	5123	5663	5432	5954	7019	6759	7346	7886	8482	9033	8817	9355	9178	8984	9103	8948	8892

Notes:

1. ***All dimensions are in feet, unless specified otherwise.***
2. ***Spacings of reinforcing bars are in inches.***
3. ***Designer must confirm design parameters with Geotechnical Engineer prior to selecting wall for site.***

ASSUMED DESIGN PARAMETERS
DENSE FOUNDATION SOIL, SLOPING BACKFILL

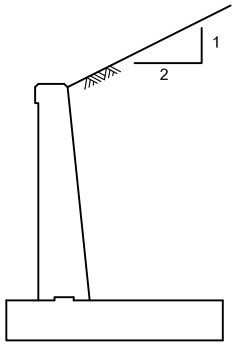

1. BACKFILL LOADING CONDITIONS:

   2H:1V SLOPING BACKFILL

2. BACKFILL SOIL PROPERTIES:

   TYPE: GRAVEL BORROW FOR BACKFILLING STRUCTURES AND PIPES

   Ø = ANGLE OF INTERNAL FRICTION = 37°

   δ = ANGLE OF WALL FRICTION = 22°

   γ = EFFECTIVE UNIT WEIGHT = 120 pcf

3. FOUNDATION SOIL PROPERTIES:

   q_f = FACTORED BEARING CAPACITY = 9400 psf

   FRICTION FACTOR = 0.57

   $Ø_{SLIDING}$ = PERFORMANCE FACTOR FOR SLIDING = 0.80

4. SEISMIC LOADING:

   A = 0.17g (Max.)

   Kh = 0.085

   Kv = 0

5. REINFORCED CONCRETE:

   F'_c = 4000 psi

   F_y = 60000 psi

DATE OF ISSUE
MARCH 2012

DRAWING NUMBER
E 305.2.0

massDOT
Massachusetts Department of Transportation
Highway Division

CONSTRUCTION STANDARDS

CANTILEVER RETAINING WALLS
DENSE FOUNDATION SOILS, LEVEL BACKFILL, SURCHARGE

DATE OF ISSUE
MARCH 2012

DRAWING NUMBER
E 305.3.0

TABLE OF DIMENSIONS AND REINFORCING STEEL

H	14.0	15.0	16.0	17.0	18.0	19.0	20.0	21.0	22.0	23.0	24.0	25.0	26.0	27.0	28.0	29.0	30.0
W	7.000	7.500	8.000	8.500	9.000	9.000	9.500	10.000	10.500	11.000	11.000	11.500	12.000	12.500	13.000	13.000	13.500
T	2.000	2.000	2.000	2.000	2.000	2.000	2.000	2.000	2.000	2.000	2.000	2.000	2.000	2.000	2.000	2.500	2.500
A	2.500	2.500	2.500	2.500	3.000	3.000	3.000	3.000	3.500	3.500	3.500	4.000	4.000	4.000	4.500	4.500	4.500
B	2.500	2.583	2.667	2.750	2.833	2.917	3.000	3.083	3.167	3.250	3.333	3.417	3.500	3.583	3.667	3.708	3.792
C	2.000	2.417	2.833	3.250	3.167	3.083	3.500	3.917	3.833	4.250	4.167	4.083	4.500	4.917	4.833	4.792	5.208
L	2.400	2.600	4.200	4.500	6.400	6.800	7.200	9.500	10.000	10.500	11.000	13.800	14.400	15.000	15.600	15.900	16.500
M	1.000	1.000	1.000	1.250	1.250	1.250	1.500	1.917	1.917	2.500	2.500	2.500	3.167	4.083	4.083	3.167	4.083
N	1.000	1.000	1.000	1.000	1.000	1.000	1.000	1.000	1.000	1.000	1.000	1.250	1.250	1.250	1.250	1.250	1.250
P	1.250	1.250	1.250	1.250	1.500	1.500	1.917	1.917	2.500	2.500	2.500	3.167	4.083	4.083	5.000	4.083	4.083
HOOK	0.833	1.000	1.000	1.000	1.000	1.167	1.333	1.333	1.333	1.583	1.583	1.833	1.833	1.833	1.833	2.000	2.000
A bars	5 @ 12	6 @ 12	6 @ 12	6 @ 12	6 @ 12	7 @ 12	8 @ 12	8 @ 12	8 @ 12	9 @ 12	9 @ 12	10 @ 12	10 @ 12	10 @ 12	10 @ 12	11 @ 12	11 @ 12
B bars	4 @ 12	4 @ 12	4 @ 12	4 @ 12	4 @ 12	4 @ 12	4 @ 12	4 @ 12	4 @ 12	4 @ 12	4 @ 12	4 @ 12	4 @ 12	4 @ 12	4 @ 12	4 @ 12	4 @ 12
C bars	4 @ 18	4 @ 18	4 @ 16	5 @ 18	5 @ 18	5 @ 18	6 @ 18	7 @ 18	7 @ 18	8 @ 18	8 @ 18	8 @ 18	9 @ 18	10 @ 18	10 @ 18	9 @ 18	10 @ 18
D bars	4 @ 18	4 @ 18	4 @ 18	4 @ 18	4 @ 18	4 @ 18	4 @ 18	4 @ 18	4 @ 18	4 @ 18	4 @ 18	5 @ 18	5 @ 18	5 @ 18	5 @ 18	5 @ 18	5 @ 18
E bars	5 @ 18	5 @ 18	5 @ 18	5 @ 18	6 @ 18	6 @ 18	7 @ 18	7 @ 18	8 @ 18	8 @ 18	8 @ 18	9 @ 18	10 @ 18	10 @ 18	11 @ 18	10 @ 18	10 @ 18

Quantities of Materials

Stem Concrete (yd^3/ft)	0.9	0.9	1.1	1.2	1.3	1.4	1.5	1.6	1.7	1.8	2.0	2.1	2.2	2.4	2.5	2.6	2.7
Footing Concrete (yd^3/ft)	0.5	0.6	0.6	0.6	0.7	0.7	0.7	0.7	0.8	0.8	0.8	0.9	0.9	0.9	1.0	1.2	1.3
Steel (lb/ft)	76	86	96	104	118	133	161	182	198	233	240	307	340	360	388	412	438

Maximum Soil Bearing Pressure

Q_{max} (psf)	4071	4328	4591	4860	4811	5491	5752	6018	5945	6208	6917	6833	7090	7352	7271	8079	8332

Notes:

1. *All dimensions are in feet, unless specified otherwise.*
2. *Spacings of reinforcing bars are in inches.*
3. *Designer must confirm design parameters with Geotechnical Engineer prior to selecting wall for site.*

ASSUMED DESIGN PARAMETERS
DENSE FOUNDATION SOIL, LEVEL BACKFILL, SURCHARGE

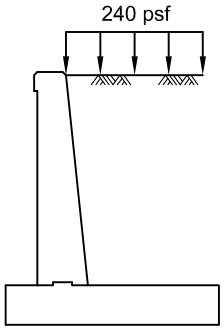

1. BACKFILL LOADING CONDITIONS:

   LEVEL BACKFILL;
   240 psf LIVE LOAD SURCHARGE.

2. BACKFILL SOIL PROPERTIES:

   TYPE: GRAVEL BORROW FOR BACKFILLING STRUCTURES AND PIPES

   Ø = ANGLE OF INTERNAL FRICTION = 37°

   δ = ANGLE OF WALL FRICTION = 22°

   γ = EFFECTIVE UNIT WEIGHT = 120 pcf

3. FOUNDATION SOIL PROPERTIES:

   q_f = FACTORED BEARING CAPACITY = 9400 psf

   FRICTION FACTOR = 0.57

   $Ø_{SLIDING}$ = PERFORMANCE FACTOR FOR SLIDING = 0.80

4. SEISMIC LOADING:

   A = 0.17g (Max.)

   Kh = 0.085

   Kv = 0

5. REINFORCED CONCRETE:

   F'_c = 4000 psi

   F_y = 60000 psi

massDOT
Massachusetts Department of Transportation
Highway Division

CONSTRUCTION STANDARDS

CANTILEVER RETAINING WALLS LOOSE FOUNDATION SOILS, SLOPING BACKFILL

DATE OF ISSUE
MARCH 2012

DRAWING NUMBER
E 305.4.0

TABLE OF DIMENSIONS AND REINFORCING STEEL

H	14.0	15.0	16.0	17.0	18.0	19.0	20.0	21.0	22.0	23.0	24.0	25.0	26.0	27.0	28.0	29.0	30.0
W	10.000	11.000	11.500	13.000	14.000	15.000	15.500	16.500	17.500	18.500	20.000	20.500	22.000	23.000	24.000	25.000	26.000
T	2.000	2.000	2.000	2.500	2.500	3.000	3.000	3.500	3.500	4.000	4.000	4.500	4.500	5.000	5.500	5.500	6.000
A	1.000	1.000	1.000	2.000	2.500	2.500	2.500	3.000	3.500	4.000	5.000	5.000	6.000	6.500	7.000	7.500	8.000
B	2.500	2.583	2.667	2.708	2.792	2.833	2.917	2.958	3.042	3.083	3.167	3.208	3.292	3.333	3.375	3.458	3.500
C	6.500	7.417	7.833	8.292	8.708	9.667	10.083	10.542	10.958	11.417	11.833	12.292	12.708	13.167	13.625	14.042	14.500
L	3.600	3.900	5.600	5.800	6.200	6.400	8.500	8.750	9.250	9.500	10.000	10.250	10.750	13.200	13.500	14.100	14.400
M	4.083	5.000	5.000	5.000	5.000	5.000	5.000	5.000	5.000	5.000	5.000	5.000	5.000	5.000	5.000	5.000	5.000
N	1.000	1.250	1.250	1.250	1.500	1.500	1.500	1.917	1.917	1.917	1.917	1.917	2.500	2.500	3.167	3.167	3.167
P	1.000	1.000	1.000	1.000	1.250	1.000	1.250	1.250	1.500	1.500	1.917	1.917	2.500	2.500	2.500	3.167	3.167
HOOK	1.000	1.167	1.167	1.167	1.333	1.333	1.583	1.583	1.833	1.833	2.000	2.000	2.000	1.583	1.583	1.583	1.583
A bars	6 @ 12	7 @ 12	7 @ 12	7 @ 12	8 @ 12	8 @ 12	9 @ 12	9 @ 12	10 @ 12	10 @ 12	11 @ 12	11 @ 12	11 @ 12	9 @ 6	9 @ 6	9 @ 6	9 @ 6
B bars	4 @ 12	4 @ 12	4 @ 12	4 @ 12	4 @ 12	4 @ 12	4 @ 12	4 @ 12	4 @ 12	4 @ 12	4 @ 12	4 @ 12	4 @ 12	4 @ 12	4 @ 12	4 @ 12	4 @ 12
C bars	10 @ 18	11 @ 15.5	11 @ 13	11 @ 14.5	11 @ 12.5	11 @ 11.5	11 @ 10	11 @ 10.5	11 @ 9	11 @ 9	11 @ 8	11 @ 8.5	11 @ 7.5	11 @ 7.5	11 @ 7.5	11 @ 6.5	11 @ 6.5
D bars	4 @ 18	5 @ 18	5 @ 18	5 @ 18	6 @ 18	6 @ 18	6 @ 18	7 @ 18	7 @ 18	7 @ 18	7 @ 16	7 @ 16	8 @ 18	8 @ 18	9 @ 18	9 @ 18	9 @ 18
E bars	4 @ 18	4 @ 18	4 @ 18	4 @ 18	5 @ 18	4 @ 18	5 @ 18	5 @ 18	6 @ 18	6 @ 18	7 @ 16	7 @ 16	8 @ 18	8 @ 18	8 @ 18	9 @ 18	9 @18

Quantities of Materials

Stem Concrete (yd^3/ft)	0.9	1.0	1.1	1.1	1.2	1.3	1.4	1.4	1.6	1.6	1.7	1.8	1.9	2.0	2.2	2.2	2.2
Footing Concrete (yd^3/ft)	0.7	0.8	0.9	1.2	1.3	1.7	1.7	2.1	2.3	2.7	3.0	3.4	3.7	4.3	4.9	5.1	5.8
Steel (lb/ft)	126	158	173	189	219	309	351	379	422	440	500	516	557	588	625	653	664

Maximum Soil Bearing Pressure

Q_{max} (psf)	4918	5231	5737	5064	4998	5371	5816	5814	5771	5807	5387	5847	5473	5567	5667	5687	5797

Notes:

1. *All dimensions are in feet, unless specified otherwise.*
2. *Spacings of reinforcing bars are in inches.*
3. *Designer must confirm design parameters with Geotechnical Engineer prior to selecting wall for site.*

ASSUMED DESIGN PARAMETERS
LOOSE FOUNDATION SOIL, SLOPING BACKFILL

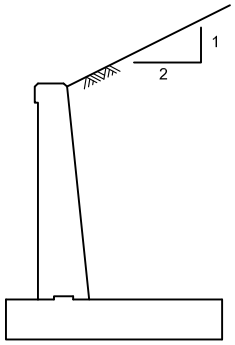

1. BACKFILL LOADING CONDITIONS:

   2H:1V SLOPING BACKFILL

2. BACKFILL SOIL PROPERTIES:

   TYPE: GRAVEL BORROW FOR BACKFILLING STRUCTURES AND PIPES

   Ø = ANGLE OF INTERNAL FRICTION = 37°

   δ = ANGLE OF WALL FRICTION = 22°

   γ = EFFECTIVE UNIT WEIGHT = 120 pcf

3. FOUNDATION SOIL PROPERTIES:

   q_f = FACTORED BEARING CAPACITY = 6000 psf

   FRICTION FACTOR = 0.50

   $Ø_{SLIDING}$ = PERFORMANCE FACTOR FOR SLIDING = 0.80

4. SEISMIC LOADING:

   A = 0.17g (Max.)

   Kh = 0.085

   Kv = 0

5. REINFORCED CONCRETE:

   F'_c = 4000 psi

   F_y = 60000 psi

massDOT
Massachusetts Department of Transportation
Highway Division

CONSTRUCTION STANDARDS

CANTILEVER RETAINING WALLS
LOOSE FOUNDATION SOILS, LEVEL BACKFILL, SURCHARGE

DATE OF ISSUE
MARCH 2012

DRAWING NUMBER
E 305.5.0

TABLE OF DIMENSIONS AND REINFORCING STEEL

H	14.0	15.0	16.0	17.0	18.0	19.0	20.0	21.0	22.0	23.0	24.0	25.0	26.0	27.0	28.0	29.0	30.0
W	7.500	8.000	8.000	8.500	9.000	9.500	10.000	10.500	11.000	11.500	12.000	13.000	13.500	14.000	15.000	15.500	16.000
T	2.000	2.000	2.000	2.000	2.000	2.000	2.000	2.000	2.000	2.000	2.000	2.000	2.000	2.500	2.500	2.500	2.500
A	1.500	1.500	1.750	2.000	2.500	2.500	2.500	3.000	3.000	3.500	3.750	4.250	4.500	5.000	5.500	5.500	6.000
B	2.500	2.583	2.667	2.750	2.833	2.917	3.000	3.083	3.167	3.250	3.333	3.417	3.500	3.542	3.625	3.750	3.875
C	3.500	3.917	3.583	3.750	3.667	4.083	4.500	4.417	4.833	4.750	4.917	5.333	5.500	5.458	5.875	6.250	6.125
L	2.400	2.600	4.200	4.500	6.400	6.800	7.200	9.500	10.000	10.500	11.000	11.500	14.400	14.700	15.300	15.900	16.500
M	1.250	1.500	1.500	1.500	1.500	1.917	2.500	2.500	3.167	3.167	3.167	4.083	4.083	3.167	4.083	5.000	5.000
N	1.000	1.000	1.000	1.000	1.000	1.000	1.000	1.000	1.250	1.250	1.250	1.250	1.500	1.250	1.500	1.500	1.500
P	1.000	1.000	1.000	1.000	1.250	1.250	1.500	1.917	1.917	2.500	2.500	3.167	4.083	3.167	4.083	4.083	5.000
HOOK	0.833	0.833	1.000	1.000	1.167	1.167	1.167	1.333	1.333	1.583	1.583	1.583	1.833	1.833	2.000	2.000	2.000
A bars	5 @ 12	5 @ 12	6 @ 12	6 @ 12	7 @ 12	7 @ 12	7 @ 12	8 @ 12	8 @ 12	9 @ 12	9 @ 12	9 @ 12	10 @ 12	10 @ 12	11 @ 12	11 @ 12	11 @ 12
B bars	4 @ 12	4 @ 12	4 @ 12	4 @ 12	4 @ 12	4 @ 12	4 @ 12	4 @ 12	4 @ 12	4 @ 12	4 @ 12	4 @ 12	4 @ 12	4 @ 12	4 @ 12	4 @ 12	4 @ 12
C bars	5 @ 18	6 @ 18	6 @ 18	6 @ 18	6 @ 18	7 @ 18	8 @ 18	8 @ 18	9 @ 18	9 @ 18	9 @ 18	10 @ 18	10 @ 16	9 @ 16	10 @ 18	11 @ 18	11 @ 18
D bars	4 @ 18	4 @ 18	4 @ 18	4 @ 18	4 @ 18	4 @ 18	4 @ 18	4 @ 18	5 @ 18	5 @ 18	5 @ 18	5 @ 18	6 @ 18	5 @ 18	6 @ 18	6 @ 18	6 @ 18
E bars	4 @ 18	4 @ 18	4 @ 18	4 @ 18	5 @ 18	5 @ 18	6 @ 18	7 @ 18	7 @ 18	8 @ 18	8 @ 18	9 @ 18	10 @ 18	9 @ 18	10 @ 18	10 @ 18	11 @ 18

Quantities of Materials

Stem Concrete (yd^3/ft)	0.9	1.0	1.1	1.2	1.3	1.4	1.5	1.6	1.7	1.8	2.0	2.1	2.1	2.3	2.4	2.6	2.7
Footing Concrete (yd^3/ft)	0.6	0.6	0.6	0.6	0.7	0.7	0.7	0.8	0.8	0.9	0.9	1.0	1.0	1.3	1.4	1.4	1.5
Steel (lb/ft)	79	86	101	106	130	141	157	191	211	246	257	287	365	343	435	463	492

Maximum Soil Bearing Pressure

Q_{max} (psf)	4318	4614	5111	5210	5133	5412	5693	5616	5893	5824	5929	5558	5670	5733	5440	5695	5687

Notes:

1. *All dimensions are in feet, unless specified otherwise.*
2. *Spacings of reinforcing bars are in inches.*
3. *Designer must confirm design parameters with Geotechnical Engineer prior to selecting wall for site.*

ASSUMED DESIGN PARAMETERS
LOOSE FOUNDATION SOIL, LEVEL BACKFILL, SURCHARGE

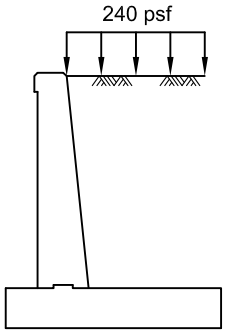

1. BACKFILL LOADING CONDITIONS:

   LEVEL BACKFILL;
   240 psf LIVE LOAD SURCHARGE.

2. BACKFILL SOIL PROPERTIES:

   TYPE: GRAVEL BORROW FOR BACKFILLING STRUCTURES AND PIPES

   Ø = ANGLE OF INTERNAL FRICTION = 37°

   δ = ANGLE OF WALL FRICTION = 22°

   γ = EFFECTIVE UNIT WEIGHT = 120 pcf

3. FOUNDATION SOIL PROPERTIES:

   q_f = FACTORED BEARING CAPACITY = 6000 psf

   FRICTION FACTOR = 0.5

   $Ø_{SLIDING}$ = PERFORMANCE FACTOR FOR SLIDING = 0.80

4. SEISMIC LOADING:

   A = 0.17g (Max.)

   Kh = 0.085

   Kv = 0

5. REINFORCED CONCRETE:

   F'_c = 4000 psi

   F_y = 60000 psi

massDOT
Massachusetts Department of Transportation
Highway Division

CONSTRUCTION STANDARDS

CANTILEVER RETAINING WALLS ROCK FOUNDATION, SLOPING BACKFILL

DATE OF ISSUE
MARCH 2012

DRAWING NUMBER
E 305.6.0

TABLE OF DIMENSIONS AND REINFORCING STEEL

H	14.0	15.0	16.0	17.0	18.0	19.0	20.0	21.0	22.0	23.0	24.0	25.0	26.0	27.0	28.0	29.0	30.0
W	8.500	9.000	9.000	9.500	10.000	10.500	11.000	11.500	12.000	13.000	13.500	14.000	14.500	15.000	15.500	16.000	16.500
T	2.000	2.000	2.000	2.000	2.000	2.000	2.000	2.000	2.500	2.500	2.500	2.500	2.500	2.500	3.000	3.000	3.500
A	1.500	2.000	2.500	3.000	3.000	3.500	3.500	4.000	4.500	4.500	4.500	5.000	5.000	5.500	5.500	6.000	6.000
B	2.500	2.583	2.667	2.750	2.833	2.917	3.000	3.083	3.125	3.208	3.292	3.375	3.458	3.542	3.583	3.667	3.708
C	4.500	4.417	3.833	3.750	4.167	4.083	4.500	4.417	4.375	5.292	5.708	5.625	6.042	5.958	6.417	6.333	6.792
L	3.600	3.900	5.600	6.000	8.000	8.500	9.000	11.400	11.700	12.300	12.900	13.500	16.450	17.150	17.500	18.200	18.550
M	1.917	1.917	1.917	1.917	1.917	1.917	2.500	2.500	1.917	3.167	4.083	4.083	5.000	5.000	5.000	5.000	5.000
N	1.000	1.000	1.000	1.000	1.000	1.000	1.000	1.250	1.000	1.250	1.250	1.250	1.250	1.250	1.500	1.250	1.500
P	1.000	1.000	1.250	1.917	1.917	2.500	2.500	3.167	3.167	3.167	4.083	4.083	5.000	5.000	5.000	5.000	5.000
HOOK	1.000	1.167	1.167	1.333	1.333	1.583	1.583	1.833	1.833	2.000	2.000	1.583	1.583	1.833	1.833	1.833	1.833
A bars	6 @ 12	7 @ 12	7 @ 12	8 @ 12	8 @ 12	9 @ 12	9 @ 12	10 @ 12	10 @ 12	11 @ 12	11 @ 12	9 @ 6	9 @ 6	10 @ 6	10 @ 6	10 @ 6	10 @ 6
B bars	4 @ 12	4 @ 12	4 @ 12	4 @ 12	4 @ 12	4 @ 12	4 @ 12	4 @ 12	4 @ 12	4 @ 12	4 @ 12	4 @ 12	4 @ 12	4 @ 12	4 @ 12	4 @ 12	4 @ 12
C bars	7 @ 18	7 @ 18	7 @ 18	7 @ 18	7 @ 18	7 @ 17	8 @ 18	8 @ 18	7 @ 17	9 @ 18	10 @ 18	10 @ 18	11 @ 18	11 @ 18	11 @ 18	11 @ 18	11 @ 18
D bars	4 @ 18	4 @ 18	4 @ 18	4 @ 18	4 @ 18	4 @ 18	4 @ 18	5 @ 18	4 @ 18	5 @ 18	5 @ 18	5 @ 17	5 @ 18	5 @ 16	6 @ 18	5 @ 15	6 @ 17
E bars	4 @ 18	4 @ 18	5 @ 18	7 @ 18	7 @ 18	8 @ 18	8 @ 18	9 @ 18	9 @ 18	9 @ 18	10 @ 18	10 @ 17	11 @ 18	11 @ 16	11 @ 18	11 @ 15	11 @ 17

Quantities of Materials

Stem Concrete (yd^3/ft)	0.9	0.9	1.1	1.2	1.3	1.4	1.5	1.6	1.7	1.8	1.9	2.0	2.2	2.3	2.4	2.5	2.7
Footing Concrete (yd^3/ft)	0.6	0.7	0.7	0.7	0.7	0.8	0.8	0.9	1.1	1.2	1.3	1.3	1.3	1.4	1.7	1.8	2.1
Steel (lb/ft)	98	120	125	148	164	197	213	272	276	342	379	382	446	503	543	558	580

Maximum Soil Bearing Pressure

Q_{max} (psf)	5123	5161	5481	5530	6053	6103	6626	6677	6838	7053	7562	7625	8134	8197	8802	8870	9475

Notes:

1. *All dimensions are in feet, unless specified otherwise.*
2. *Spacings of reinforcing bars are in inches.*
3. *Designer must confirm design parameters with Geotechnical Engineer prior to selecting wall for site.*

ASSUMED DESIGN PARAMETERS
ROCK FOUNDATION, SLOPING BACKFILL

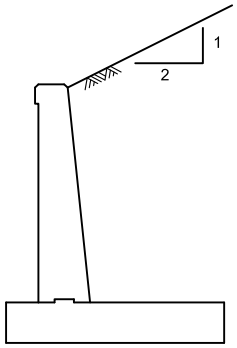

1. BACKFILL LOADING CONDITIONS:

   2H:1V SLOPING BACKFILL

2. BACKFILL SOIL PROPERTIES:

   TYPE: GRAVEL BORROW FOR BACKFILLING STRUCTURES AND PIPES

   Ø = ANGLE OF INTERNAL FRICTION = 37°

   δ = ANGLE OF WALL FRICTION = 22°

   γ = EFFECTIVE UNIT WEIGHT = 120 pcf

3. FOUNDATION SOIL PROPERTIES:

   q_f = FACTORED BEARING CAPACITY = 20000 psf

   FRICTION FACTOR = 0.70

   $Ø_{SLIDING}$ = PERFORMANCE FACTOR FOR SLIDING = 0.80

4. SEISMIC LOADING:

   A = 0.17g (Max.)

   Kh = 0.085

   Kv = 0

5. REINFORCED CONCRETE:

   F'_c = 4000 psi

   F_y = 60000 psi

massDOT
Massachusetts Department of Transportation
Highway Division

CONSTRUCTION STANDARDS

CANTILEVER RETAINING WALLS
ROCK FOUNDATION, LEVEL BACKFILL, SURCHARGE

DATE OF ISSUE
MARCH 2012

DRAWING NUMBER
E 305.7.0

TABLE OF DIMENSIONS AND REINFORCING STEEL

H	14.0	15.0	16.0	17.0	18.0	19.0	20.0	21.0	22.0	23.0	24.0	25.0	26.0	27.0	28.0	29.0	30.0
W	7.000	7.500	8.000	8.500	9.000	9.000	9.500	10.000	10.500	11.000	11.000	11.500	12.000	12.500	13.000	13.000	13.500
T	2.000	2.000	2.000	2.000	2.000	2.000	2.000	2.000	2.000	2.000	2.000	2.000	2.000	2.000	2.000	2.500	2.500
A	2.500	2.500	2.500	2.500	3.000	3.000	3.000	3.000	3.500	3.500	3.500	4.000	4.000	4.000	4.500	4.500	4.500
B	2.500	2.583	2.667	2.750	2.833	2.917	3.000	3.083	3.167	3.250	3.333	3.417	3.500	3.583	3.667	3.708	3.792
C	2.000	2.417	2.833	3.250	3.167	3.083	3.500	3.917	3.833	4.250	4.167	4.083	4.500	4.917	4.833	4.792	5.208
L	2.400	2.600	4.200	4.500	6.400	6.800	7.200	9.500	10.000	10.500	11.000	13.800	14.400	15.000	15.600	15.900	16.500
M	1.000	1.000	1.000	1.250	1.250	1.250	1.500	1.917	1.917	2.500	2.500	2.500	3.167	4.083	4.083	3.167	4.083
N	1.000	1.000	1.000	1.000	1.000	1.000	1.000	1.000	1.000	1.000	1.000	1.250	1.250	1.250	1.250	1.250	1.250
P	1.250	1.250	1.250	1.250	1.500	1.500	1.917	1.917	2.500	2.500	2.500	3.167	4.083	4.083	5.000	4.083	4.083
HOOK	0.833	1.000	1.000	1.000	1.000	1.167	1.333	1.333	1.333	1.583	1.583	1.833	1.833	1.833	1.833	2.000	2.000
A bars	5 @ 12	6 @ 12	6 @ 12	6 @ 12	6 @ 12	7 @ 12	8 @ 12	8 @ 12	8 @ 12	9 @ 12	9 @ 12	10 @ 12	10 @ 12	10 @ 12	10 @ 12	11 @ 12	11 @ 12
B bars	4 @ 12	4 @ 12	4 @ 12	4 @ 12	4 @ 12	4 @ 12	4 @ 12	4 @ 12	4 @ 12	4 @ 12	4 @ 12	4 @ 12	4 @ 12	4 @ 12	4 @ 12	4 @ 12	4 @ 12
C bars	4 @ 18	4 @ 18	4 @ 16	5 @ 18	5 @ 18	5 @ 18	6 @ 18	7 @ 18	7 @ 18	8 @ 18	8 @ 18	8 @ 18	9 @ 18	10 @ 18	10 @ 18	9 @ 18	10 @ 18
D bars	4 @ 18	4 @ 18	4 @ 18	4 @ 18	4 @ 18	4 @ 18	4 @ 18	4 @ 18	4 @ 18	4 @ 18	4 @ 18	5 @ 18	5 @ 18	5 @ 18	5 @ 18	5 @ 18	5 @ 18
E bars	5 @ 18	5 @ 18	5 @ 18	5 @ 18	6 @ 18	6 @ 18	7 @ 18	7 @ 18	8 @ 18	8 @ 18	8 @ 18	9 @ 18	10 @ 18	10 @ 18	11 @ 18	10 @ 18	10 @ 18

Quantities of Materials

Stem Concrete (yd^3/ft)	0.9	1.0	1.1	1.2	1.3	1.4	1.5	1.6	1.7	1.8	2.0	2.1	2.2	2.4	2.5	2.6	2.7
Footing Concrete (yd^3/ft)	0.5	0.6	0.6	0.6	0.7	0.7	0.7	0.7	0.8	0.8	0.8	0.9	0.9	0.9	1.0	1.2	1.3
Steel (lb/ft)	76	85	96	104	118	133	176	182	198	233	240	307	340	360	388	412	438

Maximum Soil Bearing Pressure

Q_{max} (psf)	4071	4328	4591	4860	4811	5491	5752	6018	5945	6208	6917	6833	7090	7352	7271	8079	8332

Notes:

1. *All dimensions are in feet, unless specified otherwise.*
2. *Spacings of reinforcing bars are in inches.*
3. *Designer must confirm design parameters with Geotechnical Engineer prior to selecting wall for site.*

ASSUMED DESIGN PARAMETERS
ROCK FOUNDATION, LEVEL BACKFILL, SURCHARGE

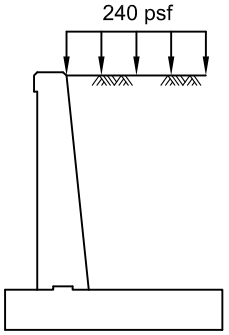

1. BACKFILL LOADING CONDITIONS:

LEVEL BACKFILL;
240 psf LIVE LOAD SURCHARGE.

2. BACKFILL SOIL PROPERTIES:

TYPE: GRAVEL BORROW FOR BACKFILLING STRUCTURES AND PIPES

Ø = ANGLE OF INTERNAL FRICTION = 37°

δ = ANGLE OF WALL FRICTION = 22°

γ = EFFECTIVE UNIT WEIGHT = 120 pcf

3. FOUNDATION SOIL PROPERTIES:

q_f = FACTORED BEARING CAPACITY = 20000 psf

FRICTION FACTOR = 0.70

$Ø_{SLIDING}$ = PERFORMANCE FACTOR FOR SLIDING = 0.80

4. SEISMIC LOADING:

A = 0.17g (Max.)

Kh = 0.085

Kv = 0

5. REINFORCED CONCRETE:

F'_c = 4000 psi

F_y = 60000 psi

massDOT
Massachusetts Department of Transportation
Highway Division

CONSTRUCTION STANDARDS

STEEL W BEAM HIGHWAY GUARD

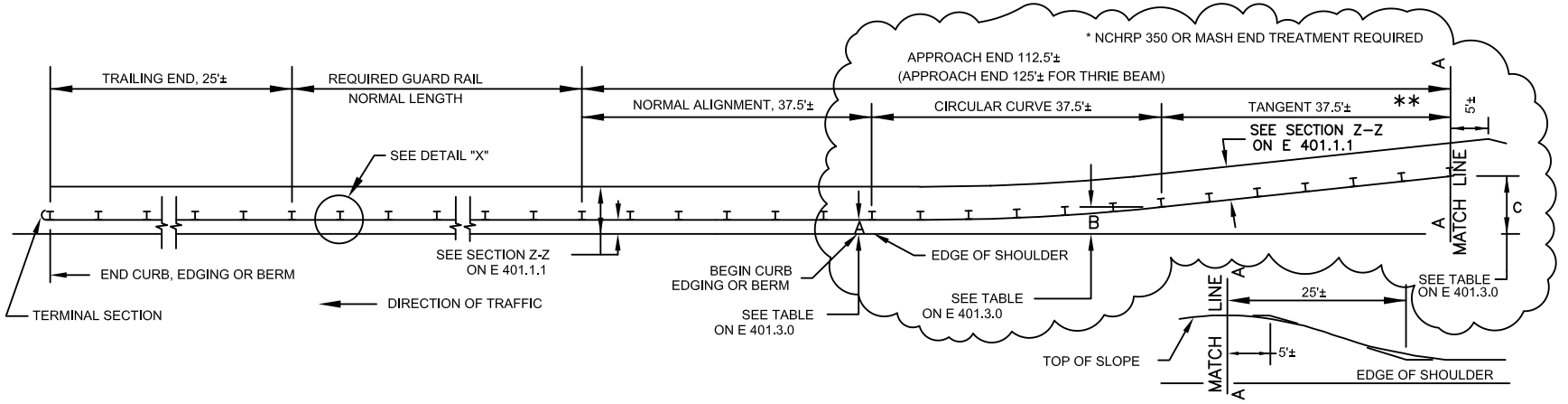

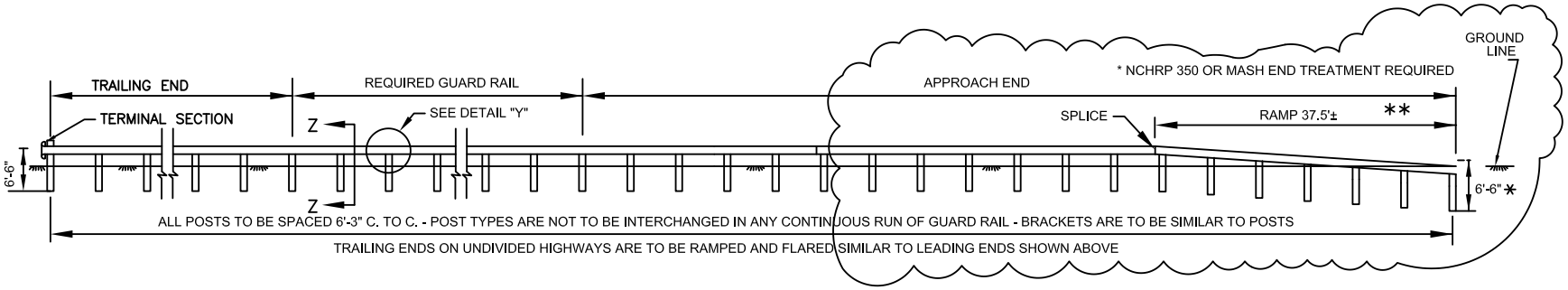

NCHRP 350 TEST LEVEL 3 OR MASH COMPLIANT GUARDRAIL TERMINAL SECTIONS ON ALL ROADWAYS WITH DESIGN SPEED OF 50 MPH OR GREATER.
BURIED ENDS ONLY FOR ROADWAYS WITH SPEEDS LESS THAN 50 MPH.

* STANDARD LENGTH POST TO BE USED IN RAMPED SECTIONS.

** 50' FOR THRIE BEAM.

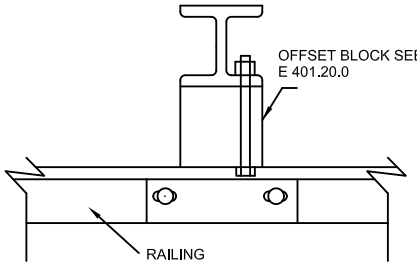

DETAIL "X"

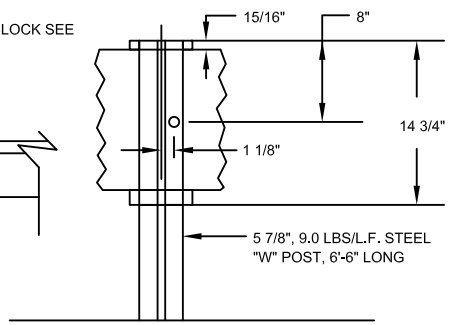

DETAIL "Y"

NOTES:

1. THIS METHOD OF INSTALLATION IS APPLICABLE WHEN THE EMBANKMENT SLOPE ADJACENT TO THE ROADWAY IS 1V:2H OR STEEPER.
2. WHEN PLACED IN MEDIAN, CHANGE TO THRIE BEAM AND HEIGHT 2'-8 1/2"±1". FOR SECTION Z-Z, (NOTE ℄ HEIGHT IS ALWAYS 21 1/2")
3. LENGTHS OF HIGHWAY GUARD SHOWN ARE MEASUREMENTS ALONG THE FACE OF THE RAILING.
4. OTHER DETAILS ARE SHOWN ON E 401.5.0 - E 401.10.0
5. FOR DESCRIPTION, MATERIALS AND CONSTRUCTION METHODS SEE STANDARD SPECIFICATIONS.
6. DETAILS SHOWN HERE ALSO APPLY TO THRIE BEAM GUARD RAIL EXCEPT AS OTHERWISE NOTED.

DATE OF ISSUE
MARCH 2012

DRAWING NUMBER
E 401.1.0

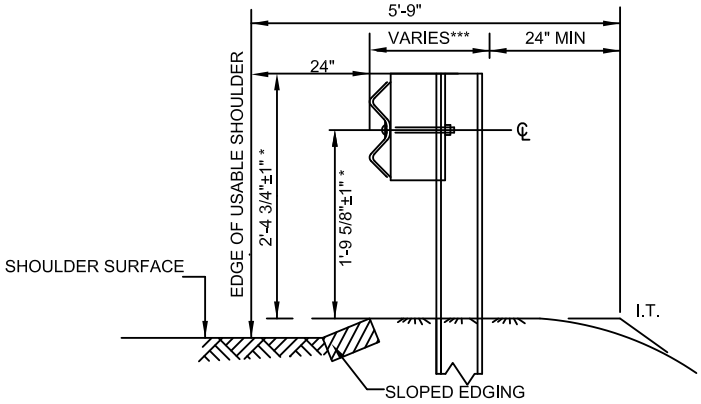

SECTION Z–Z**

SLOPED EDGING ALONG EDGE OF SHOULDER AND RAMPS
SEE E 106.5.0 FOR DETAILS OF SETTING SLOPED EDGING

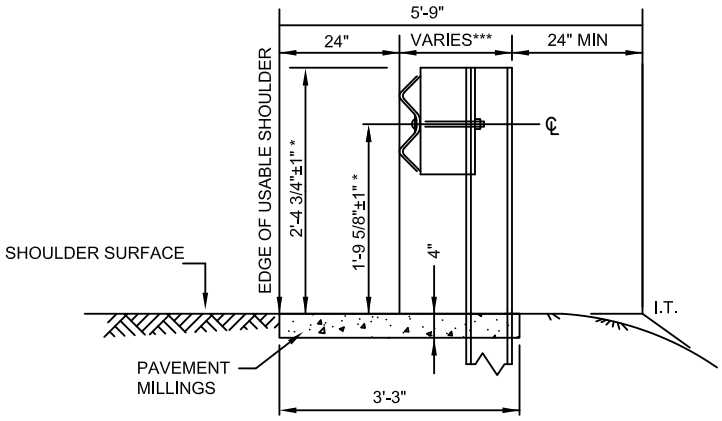

SECTION Z–Z**

PAVEMENT MILLING MULCH

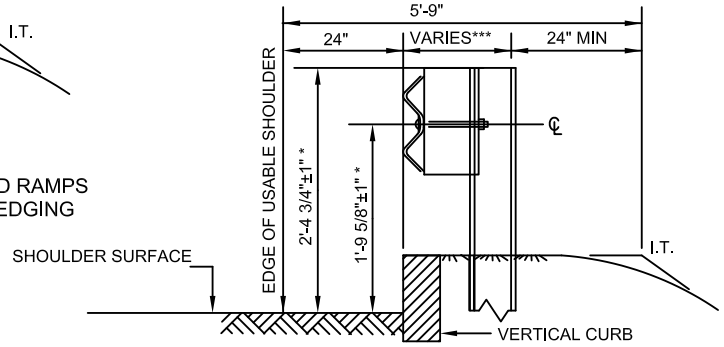

SECTION Z–Z**

VERTICAL GRANITE CURB OR BITUMINOUS
CONCRETE CURB ALONG EDGE OF SHOULDER

* WHEN PLACED IN MEDIAN, CHANGE TO THRIE BEAM AND HEIGHT TO 2'-8 1/2"±1".
(NOTE ℄ HEIGHT OF RAIL IS ALWAYS 1'-9 5/8"±1")

** SEE E 401.1.0 FOR SECTION Z-Z LOCATION

*** VARIES ACCORDING TO POST MATERIAL

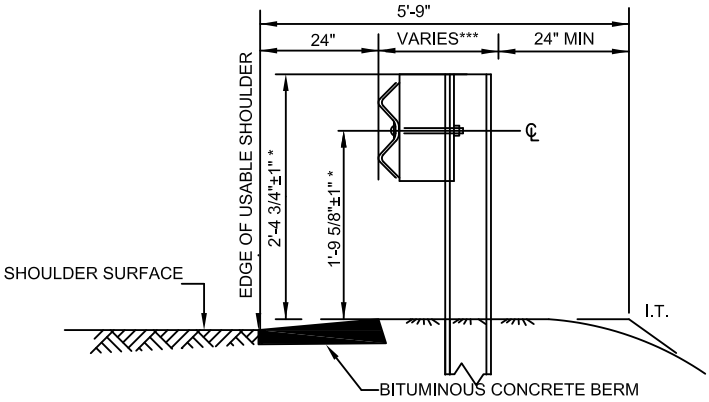

SECTION Z–Z**

TYPE "A" BERM ALONG EDGE OF SHOULDER

massDOT Massachusetts Department of Transportation Highway Division
CONSTRUCTION STANDARDS

STEEL W BEAM HIGHWAY GUARD SECTIONS

DATE OF ISSUE
MARCH 2012

DRAWING NUMBER
E 401.1.1

massDOT
Massachusetts Department of Transportation
Highway Division

CONSTRUCTION STANDARDS

INSTALLATION FOR STEEL W BEAM HIGHWAY GUARD FOR SIGN PROTECTION

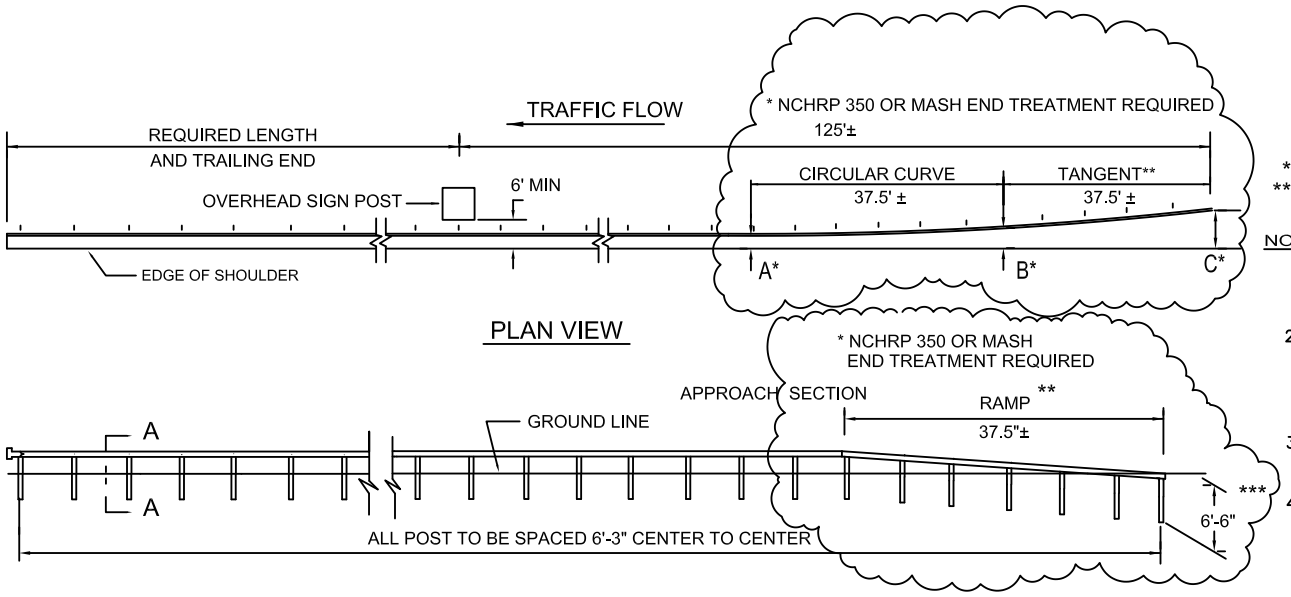

* SEE TABLE ON E 401.3.0 FOR DIMENSIONS
** 50' FOR THRIE BEAM
*** STANDARD LENGTH POSTS SHALL BE USED IN RAMPED SECTIONS

NOTES:

1. LENGTHS OF HIGHWAY GUARD SHOWN ARE MEASUREMENTS ALONG FACE OF RAILING.
2. FOR DESCRIPTIONS, MATERIAL AND AND CONSTRUCTION METHODS, SEE THE STANDARD SPECIFICATIONS AND CONSTRUCTION E 401.1.0 AND E 401.5.0 - E 401.10.0.
3. DETAILS SHOWN HEREIN ALSO APPLY TO THRIE BEAM GUARD RAIL, EXCEPT AS OTHERWISE NOTED.
4. WHEN PLACED IN MEDIAN, CHANGE TO THRIE BEAM & HEIGHT OF 2'-6 1/2"±1"

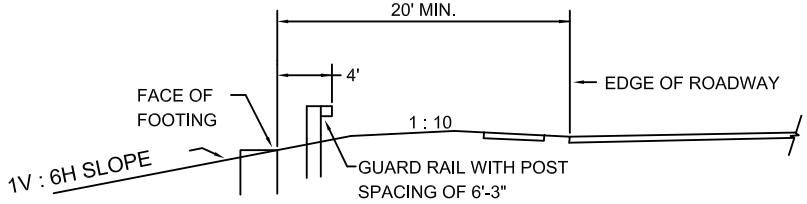

FULL SPAN - 1V : 6H SLOPE

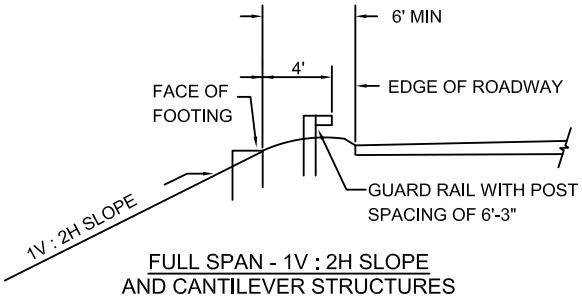

FULL SPAN - 1V : 2H SLOPE
AND CANTILEVER STRUCTURES

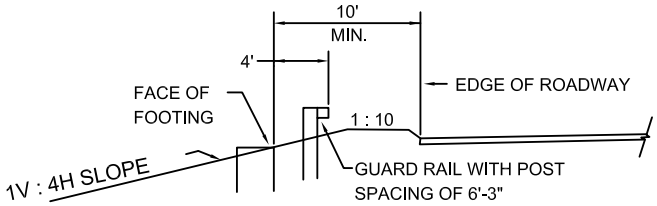

FULL SPAN - 1V : 4H SLOPE

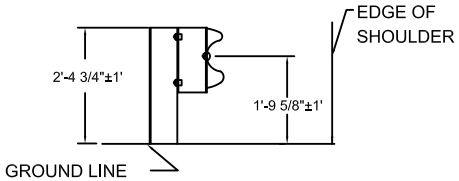

SECTION A-A

DATE OF ISSUE
MARCH 2012

DRAWING NUMBER
E 401.2.0R

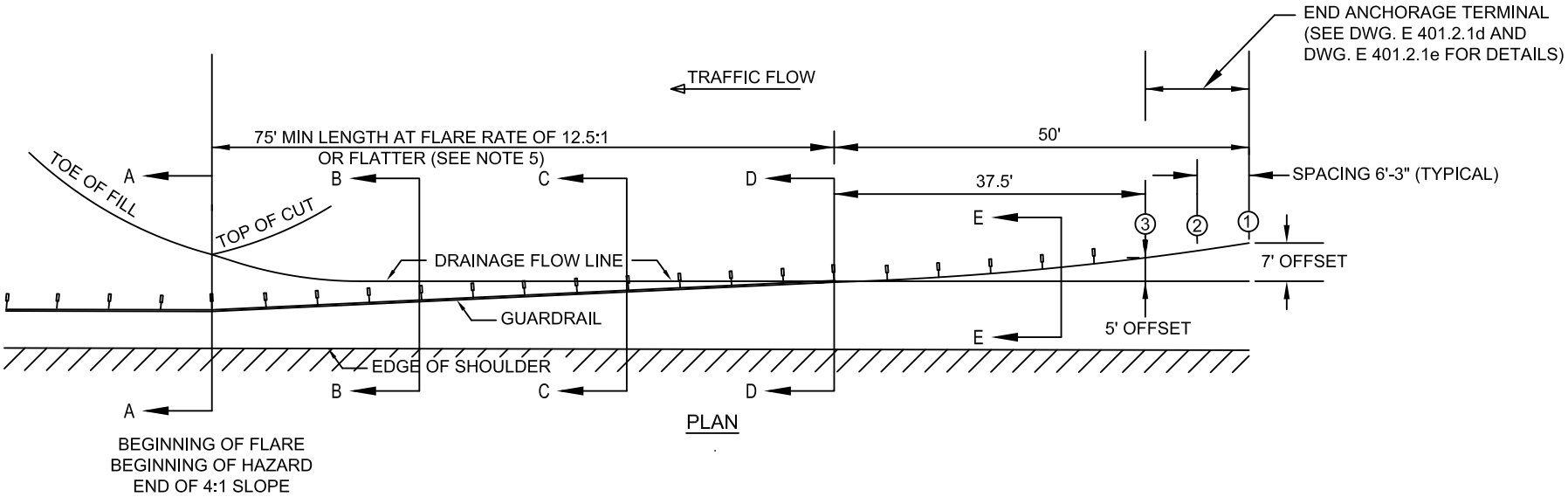

PLAN

NOTES:

1. THE BOTTOM RAIL SHALL BE TUCKED BEHIND AND BOLTED TO POST A-A USING TWO (2) 5/8" DIA. X 1 1/2" LONG HEX. HEAD BOLT THROUGH THE UPPER AND LOWER PORTION OF THE RAIL.
2. THE BOTTOM RAIL SHALL BE BOLTED TO THE REMAINING POSTS (OTHER THAN POST 1, 2, & 3) WITH A SINGLE 5/8" DIA. X 1 1/2" LONG HEX. HEAD BOLT THROUGH THE MIDDLE OF THE RAIL ELEMENT. (FOR ATTACHMENT TO POST 3 DETAILS SEE DWG. E 401.2.1e)
3. OFFSET BLOCKS ARE NOT REQUIRED FOR THE BOTTOM RAIL.
4. MAINTAIN HEIGHT OF TOP RAIL RELATIVE TO EDGE OF SHOULDER UNTIL A MAXIMUM HEIGHT OF 45" ABOVE GROUND IS REACHED, THEN TOP OF GUARD RAIL BECOMES PARALLEL TO GROUND.
5. LOW SPEED (45 MPH OR LESS) INSTALLATIONS REQUIRE 50' OF GUARDRAIL USING A 9:1 FLARE RATE.
6. THIS END TREATMENT IS ONLY APPLICABLE WHERE THERE IS A 1:4 OR FLATTER FORE-SLOPE BETWEEN THE ROADWAY AND THE CUT-SLOPE.

massDOT
Massachusetts Department of Transportation
Highway Division

CONSTRUCTION STANDARDS

STEEL W BEAM HIGHWAY GUARD
BURIED IN BACK-SLOPE
PLAN VIEW

DATE OF ISSUE
MARCH 2012

DRAWING NUMBER
E 401.2.1a

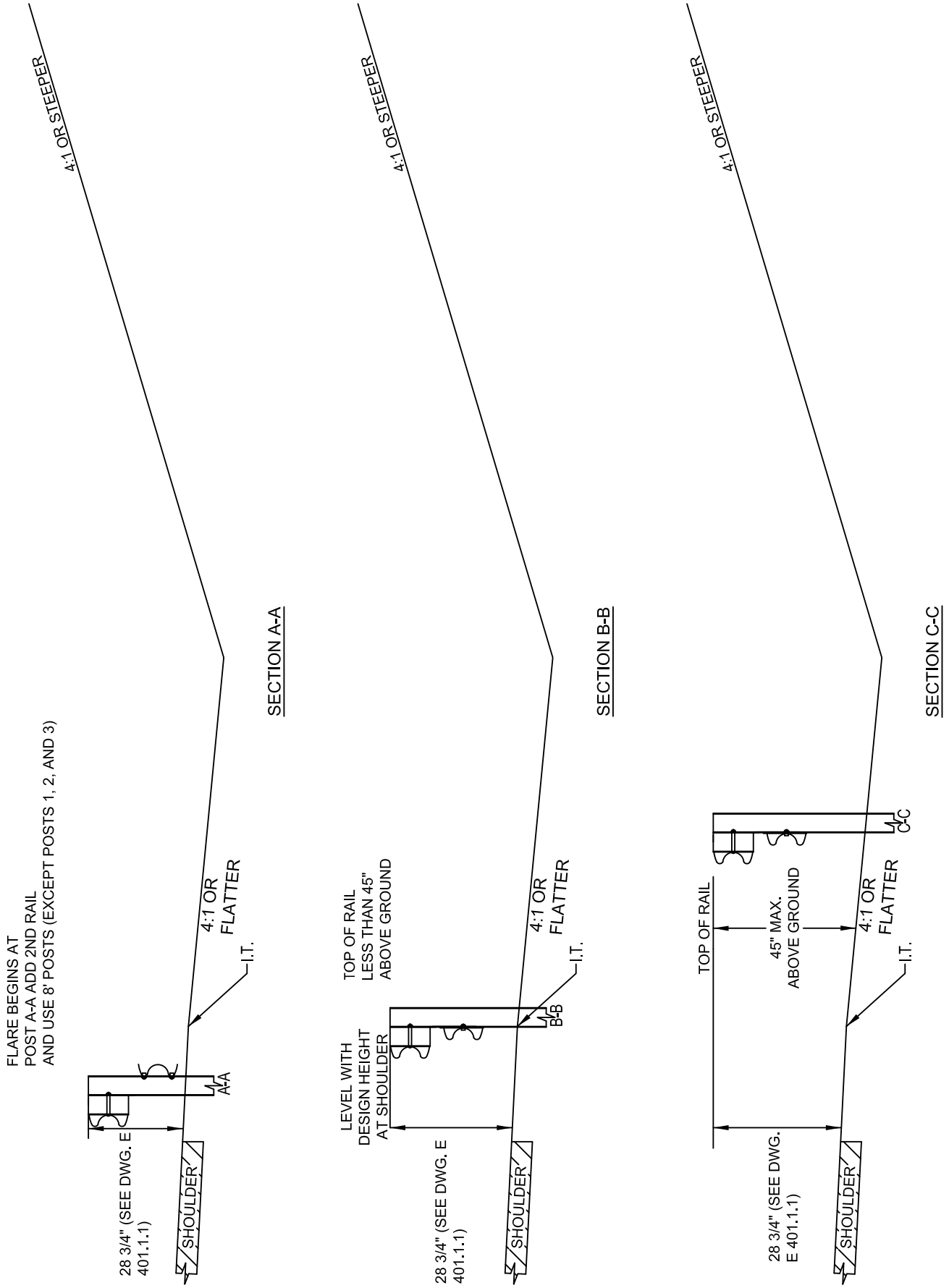

massDOT
Massachusetts Department of Transportation
Highway Division
CONSTRUCTION STANDARDS

STEEL W BEAM HIGHWAY GUARD BURIED IN BACK-SLOPE

POST LOCATION

DATE OF ISSUE
MARCH 2012

DRAWING NUMBER
E 401.2.1b

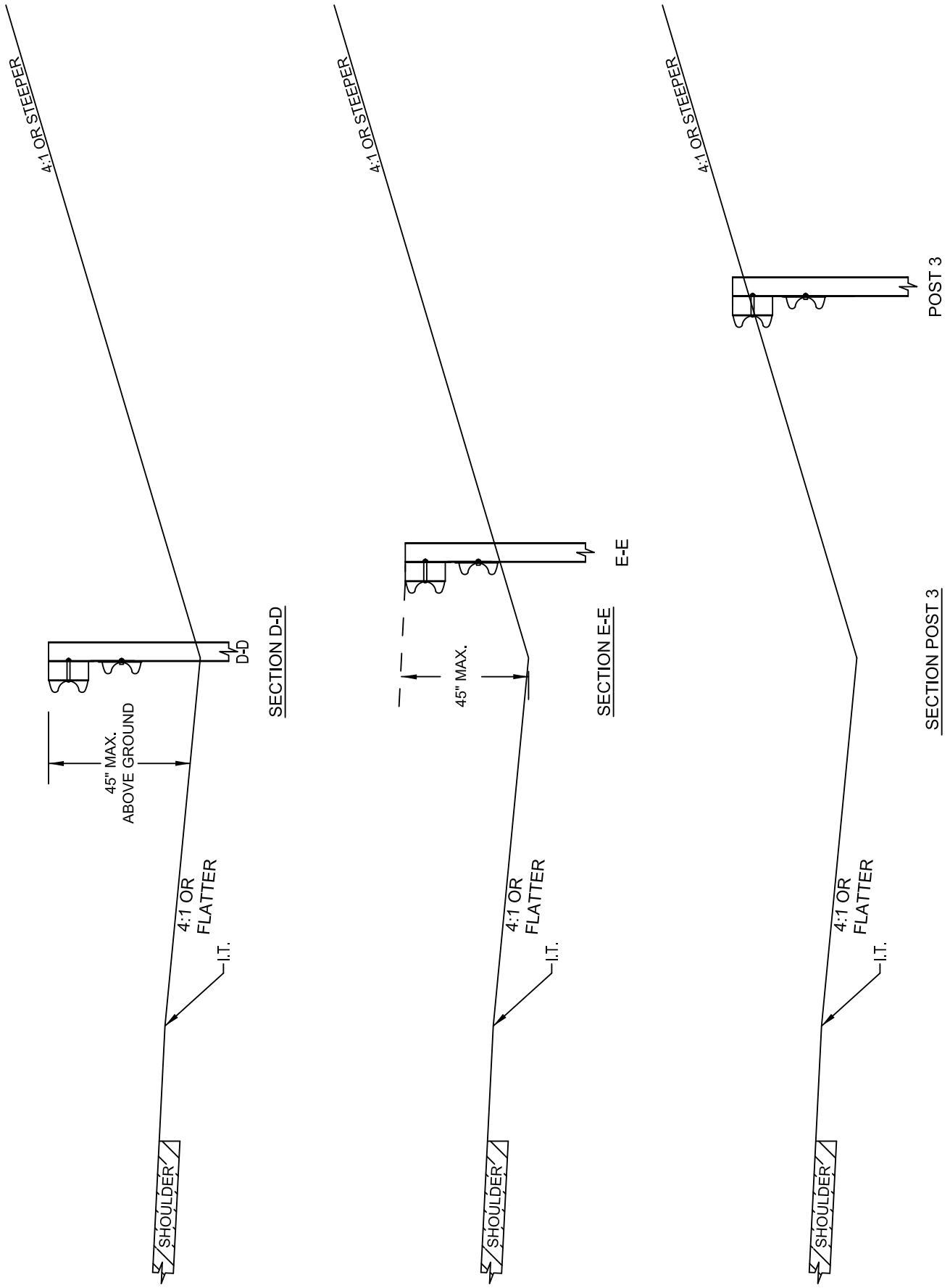

massDOT
Massachusetts Department of Transportation
Highway Division
CONSTRUCTION STANDARDS

STEEL W BEAM HIGHWAY GUARD BURIED IN BACK-SLOPE

POST LOCATION

DATE OF ISSUE
MARCH 2012

DRAWING NUMBER
E 401.2.1c

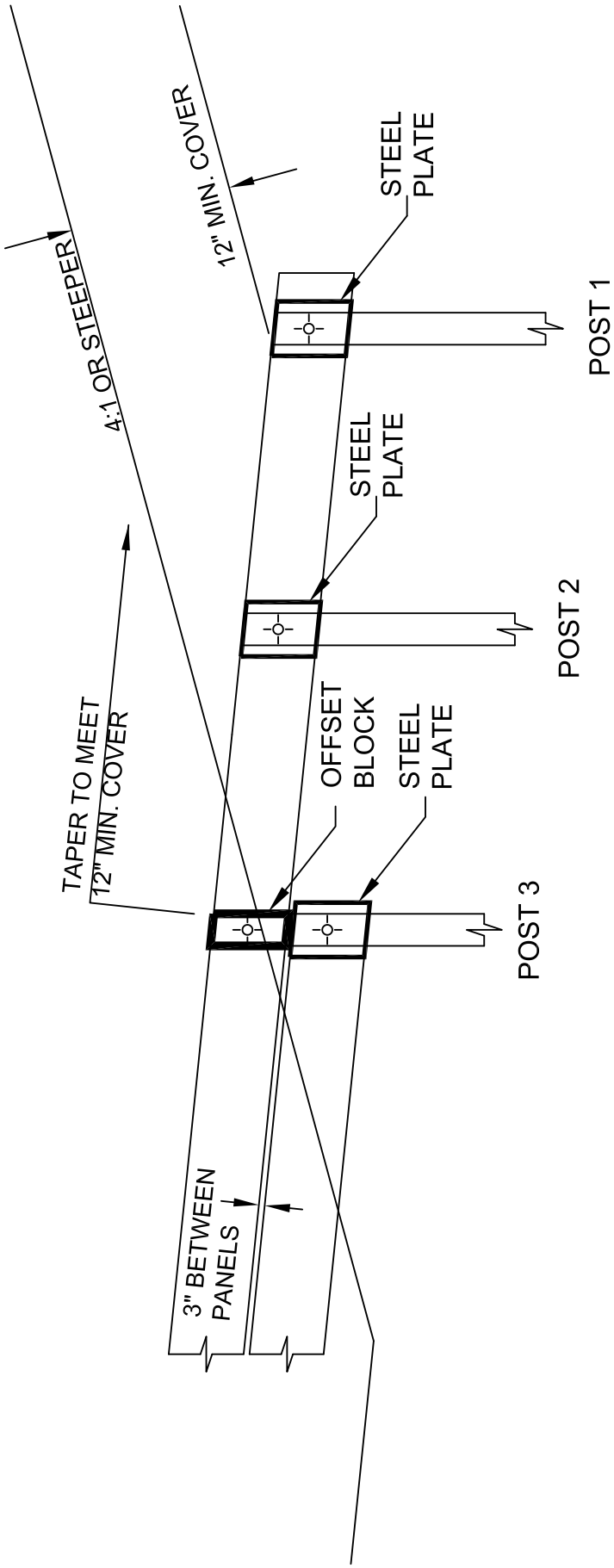

NOTE: FOR BOLTING AND PLATE DETAILS SEE DWG. E 401.2.1e

massDOT Massachusetts Department of Transportation Highway Division

CONSTRUCTION STANDARDS

STEEL W BEAM HIGHWAY GUARD BURIED IN BACK-SLOPE

ANCHORAGE DETAILS

DATE OF ISSUE

MARCH 2012

DRAWING NUMBER

E 401.2.1d

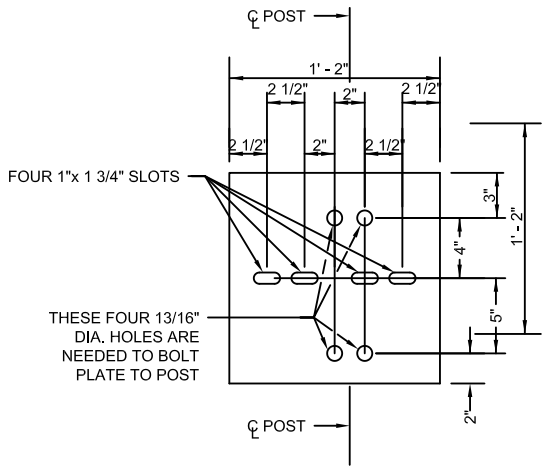

1/2" STEEL PLATE VIEW

(GALVANIZED)
BOLTED TO THE LAST THREE POSTS BURIED IN BACK SLOPE

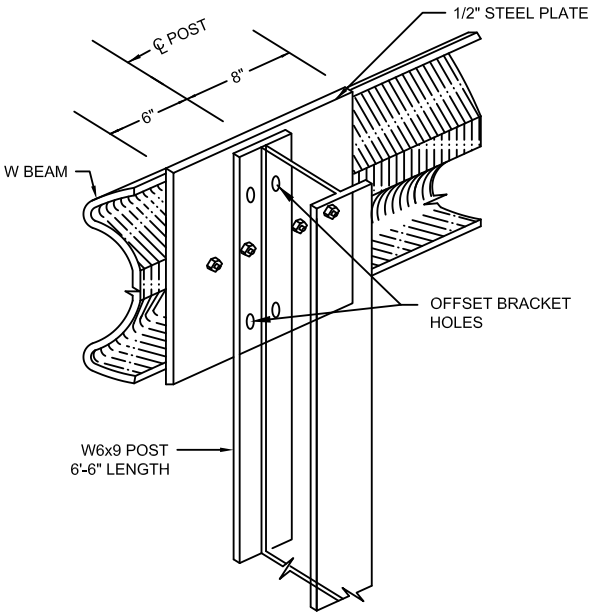

1/2" STEEL PLATE ATTACHED TO POST

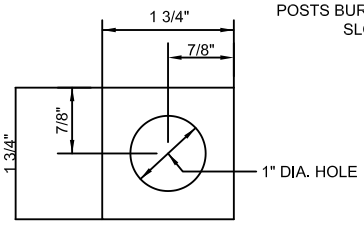

SQUARE WASHER

(3/16" THICK GALVANIZED)

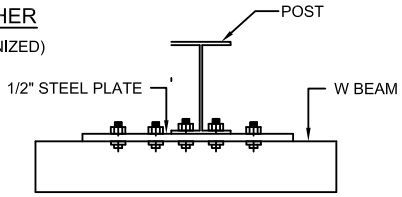

PLAN VIEW

(BOLTED)

ALL BOLTS, NUTS AND WASHERS ARE TO BE GALVANIZED

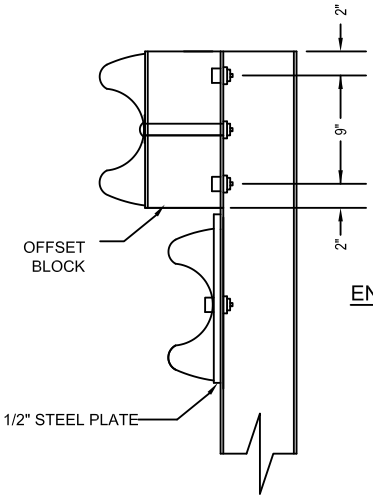

END VIEW OF POST 3

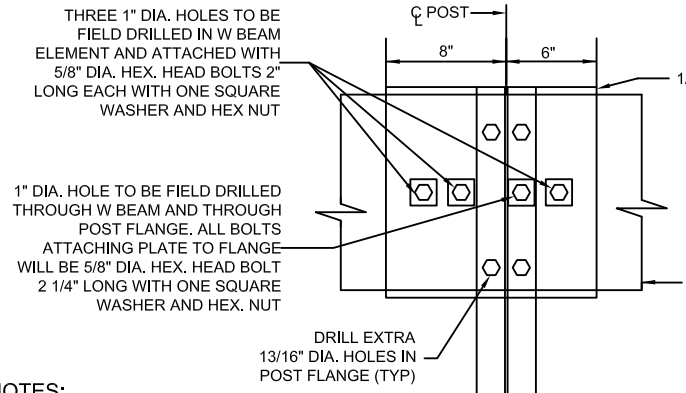

FRONT VIEW

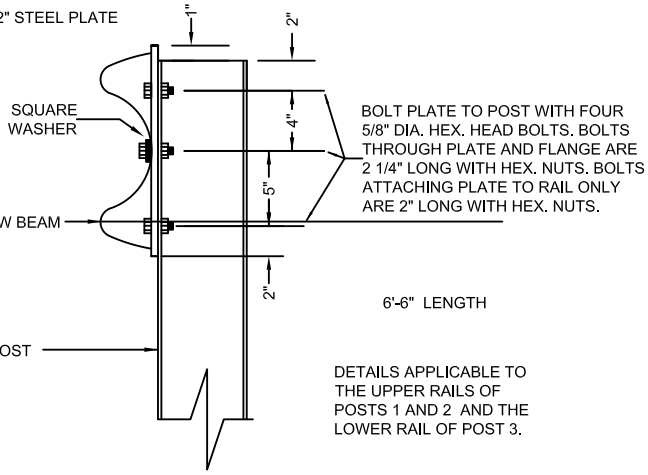

END VIEW

1/2" STEEL PLATE BOLTED TO POST

NOTES:

1. THE 1/2" STEEL PLATE SHALL CONFORM TO THE REQUIREMENTS OF A-36. THE PLATE SHALL BE BOLTED TO THE POST FOR THE UPPER RAIL OF POSTS 1 AND 2 AND FOR THE LOWER RAIL OF POST 3. POSTS 1 AND 2 ARE BURIED IN THE CUT SLOPE.
2. FIELD DRILLED HOLES SHALL BE COATED WITH ZINC RICH PAINT.

massDOT Massachusetts Department of Transportation Highway Division

CONSTRUCTION STANDARDS

STEEL W BEAM HIGHWAY GUARD BURIED IN BACK-SLOPE END ANCHORAGE DETAILS FOR POSTS 1, 2 AND 3

DATE OF ISSUE
MARCH 2012

DRAWING NUMBER
E 401.2.1e

TYPICAL INSTALLATION*

	A	B	C	
			W SECTION	THRIE BEAM
ALL GUARDRAIL CONFIGURATION SHOWN ON E 401.1.1 SECTION Z-Z	24" ±	3'-3" ±	6'-6" ±	7'-7" ±

NOTE: ALL MEASUREMENTS ARE FROM EDGE OF USABLE SHOULDER

FOR OVERHEAD SIGN PROTECTION**

	A	B	C	
			W SECTION	THRIE BEAM
1V : 2H SLOPE 2:1 SLOPE	24" ±	3'-3" ±	6'-6" ±	7'-7" ±
1V : 4H SLOPE 4:1 SLOPE	6'-0" ±	7'-9" ±	11'-0" ±	12'-1" ±
1V : 6H SLOPE 6:1 SLOPE	16'-0" ±	17'-9" ±	21'-0" ±	22'-1" ±

* SEE E 401.1.0

** SEE E 401.2.0

massDOT Massachusetts Department of Transportation Highway Division

CONSTRUCTION STANDARDS

TABLE OF OFFSETS FOR HIGHWAY GUARD FLARED ENDS

DATE OF ISSUE
MARCH 2012

DRAWING NUMBER
E 401.3.0

massDOT
Massachusetts Department of Transportation
Highway Division

CONSTRUCTION STANDARDS

STEEL THRIE BEAM HIGHWAY GUARD
RAIL DETAILS

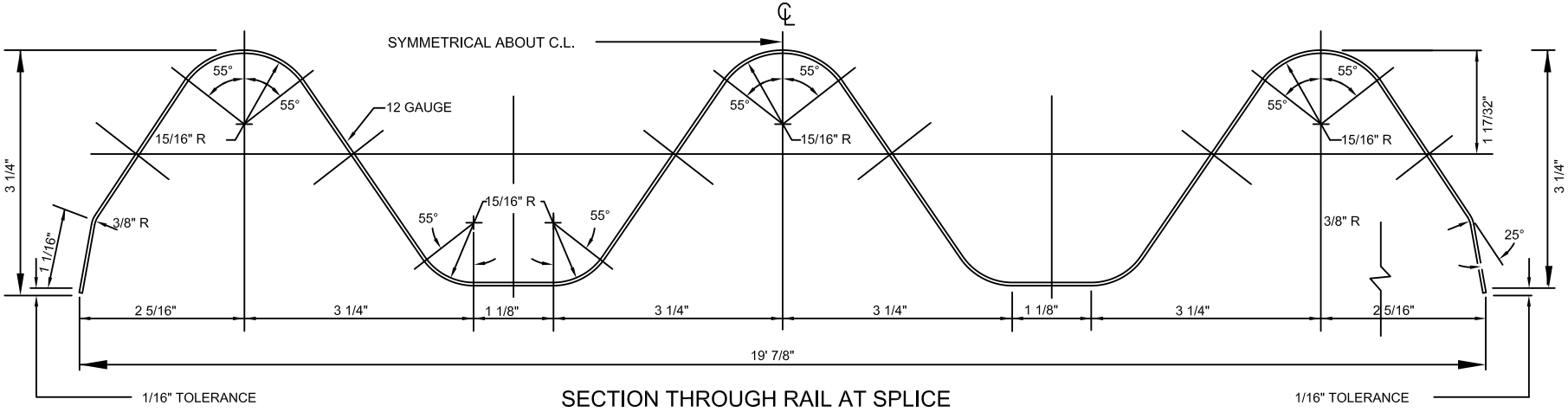

SECTION THROUGH RAIL AT SPLICE

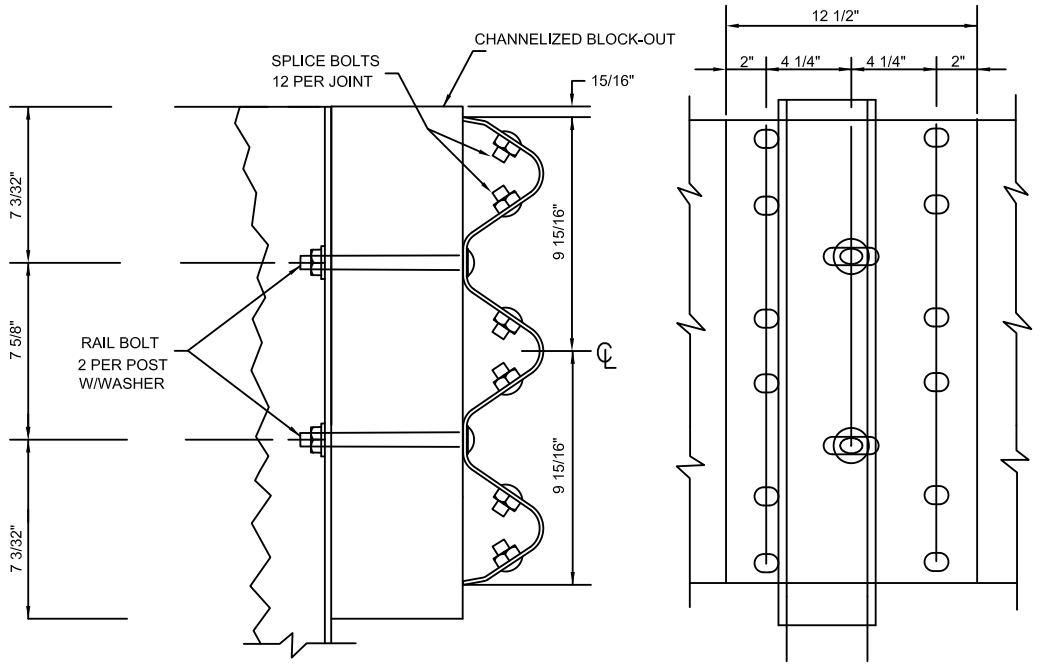

RAIL SPLICE

DIRECTION OF TRAFFIC

NOTES:
1. FOR POST & BLOCK-OUT DETAILS SEE E 401.6.0R AND E 401.21.0
2. FOR HARDWARE DETAILS SEE E 401.7.0R
3. LAP DOWN STREAM IN DIRECTION OF TRAFFIC

DATE OF ISSUE
MARCH 2012

DRAWING NUMBER
E 401.5.0

massDOT Massachusetts Department of Transportation Highway Division

CONSTRUCTION STANDARDS

BRIDGE RAIL TO HIGHWAY GUARD TRANSITION

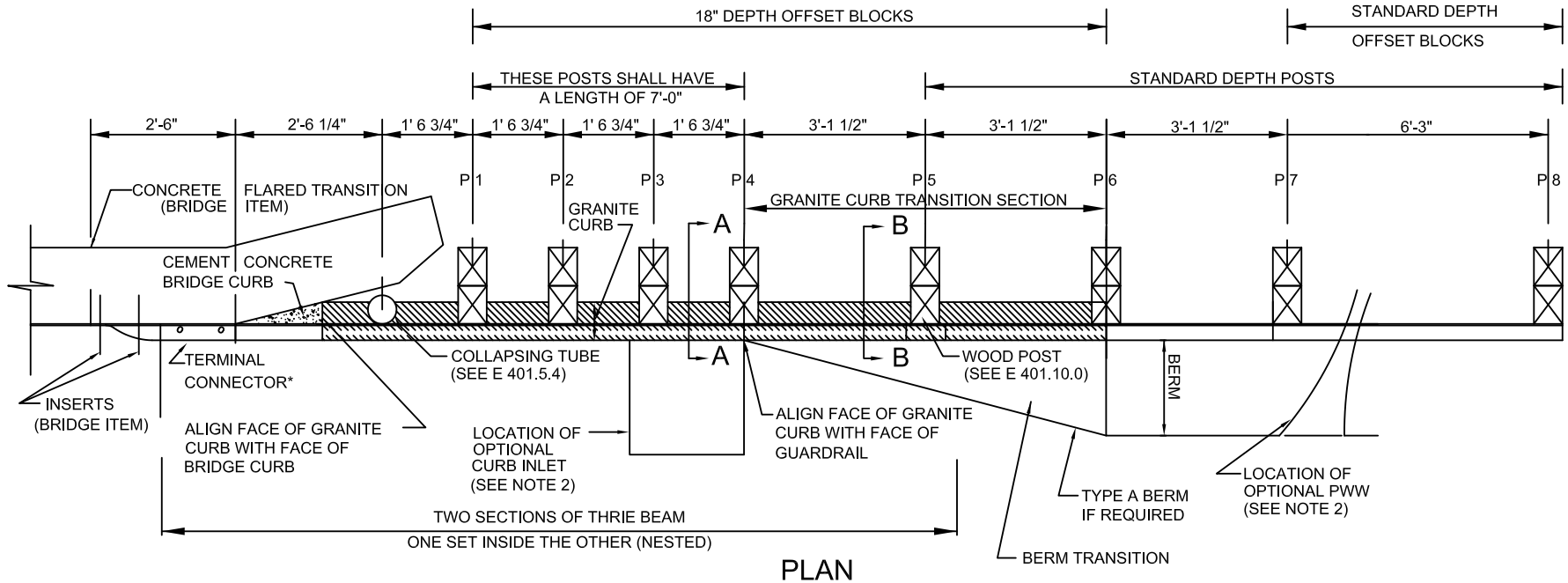

PLAN

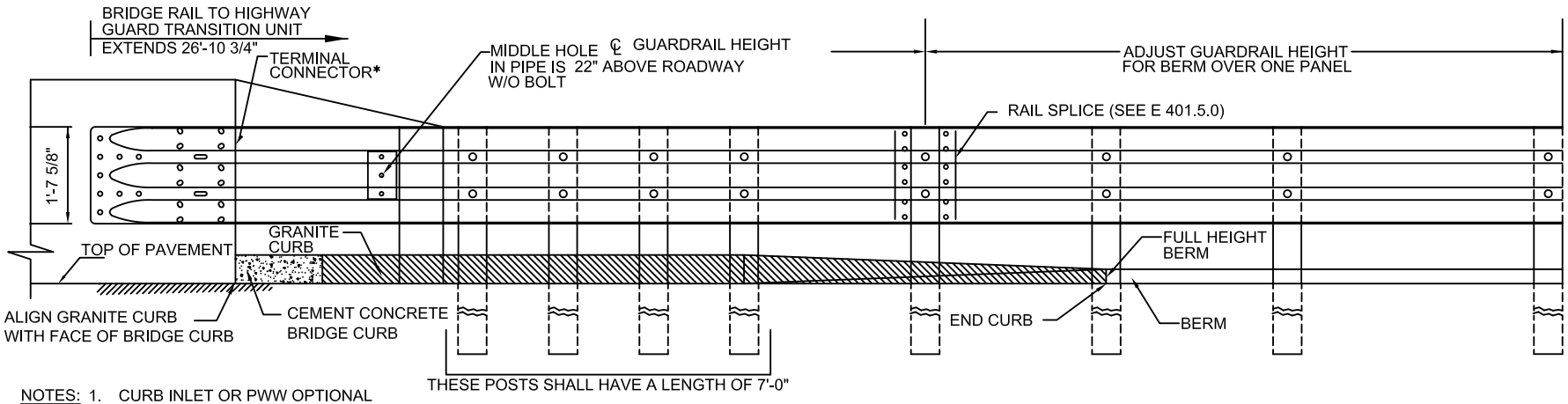

ELEVATION

NOTES:

1. CURB INLET OR PWW OPTIONAL BASED ON GENERAL PLAN REQUIREMENTS
2. FOR SECTIONS A-A AND B-B, SEE E 401.5.2
3. THRIE BEAM TO W BEAM TRANSITION RAIL (SEE E401.6.1) IS TYPICALLY PLACED OUTSIDE BRIDGE RAIL TO HIGHWAY GUARD TRANSITION UNIT LENGTH, (26'-10 3/4") AT OR BEYOND POST P8.
4. TRANSITION FROM THRIE BEAM IS ALLOWED FROM P5 TO P7 IF REQUIRED BY SITE CONSTRAINTS. PAYMENT FOR THE TRANSITION ELEMENT IS INCLUDED IN THIS ITEM IN THAT CASE.

*SEE E 401.5.3 FOR TERMINAL CONNECTOR DIMENSIONS AND DETAILS

DATE OF ISSUE MARCH 2012

DRAWING NUMBER **E 401.5.1R**

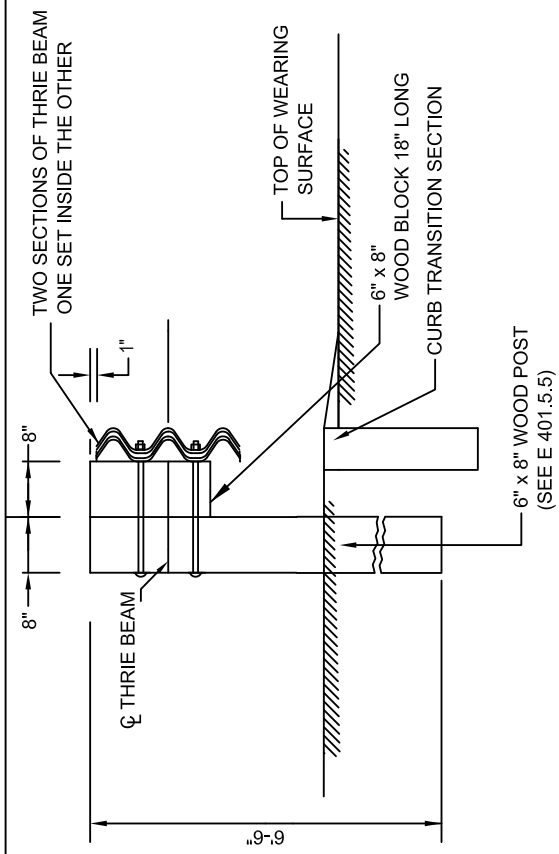

POST P5

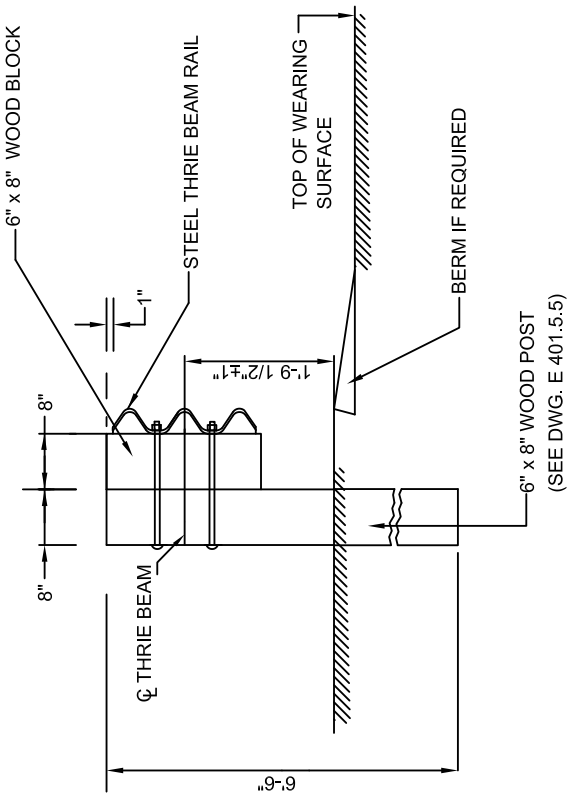

POST P7 THROUGH END (TYPICAL GUARD RAIL INSTALLATION)

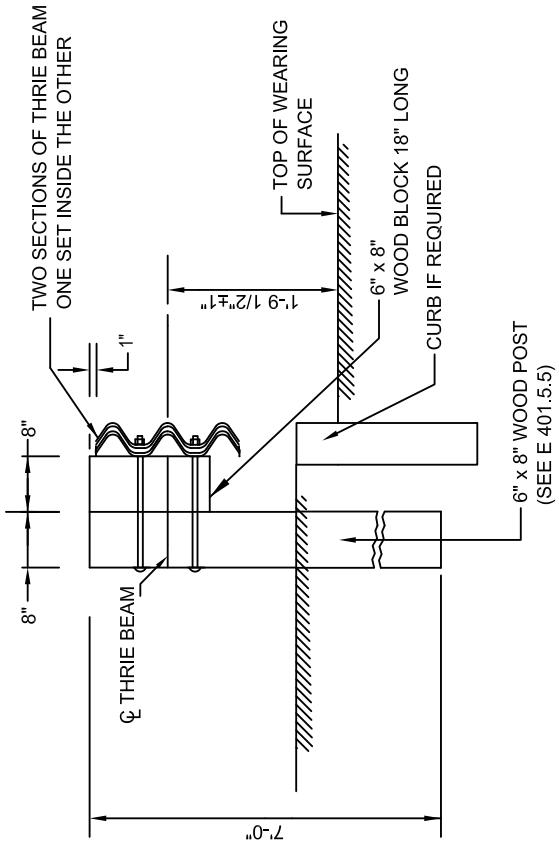

POST P1, P2, P3, P4

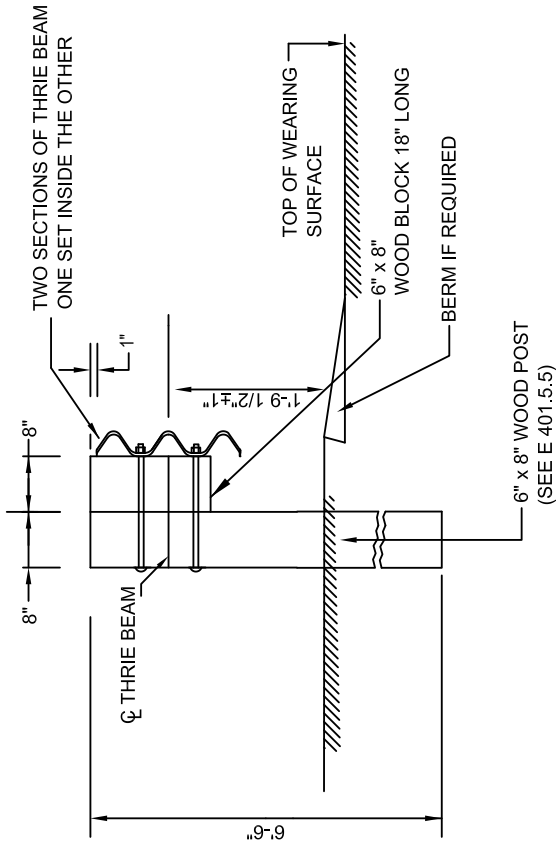

POST P6

massDOT
Massachusetts Department of Transportation
Highway Division
CONSTRUCTION STANDARDS

BRIDGE RAIL TO HIGHWAY GUARD TRANSITION – SECTIONS

DATE OF ISSUE
MARCH 2012

DRAWING NUMBER
E 401.5.2

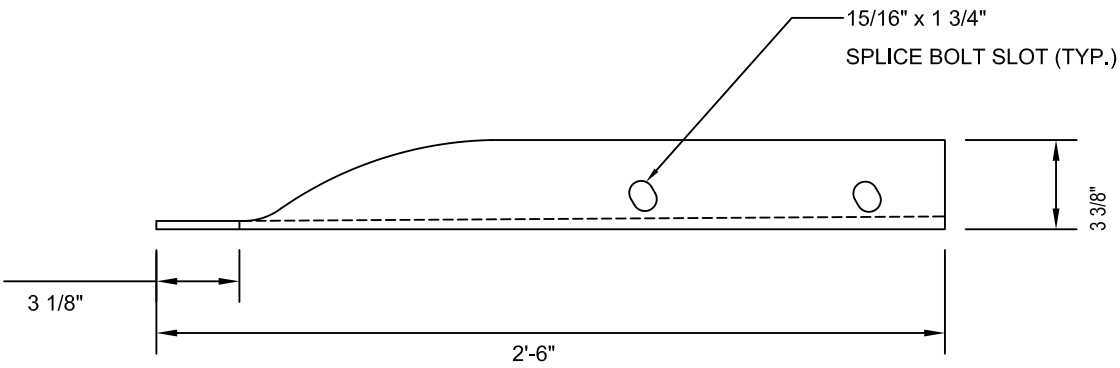

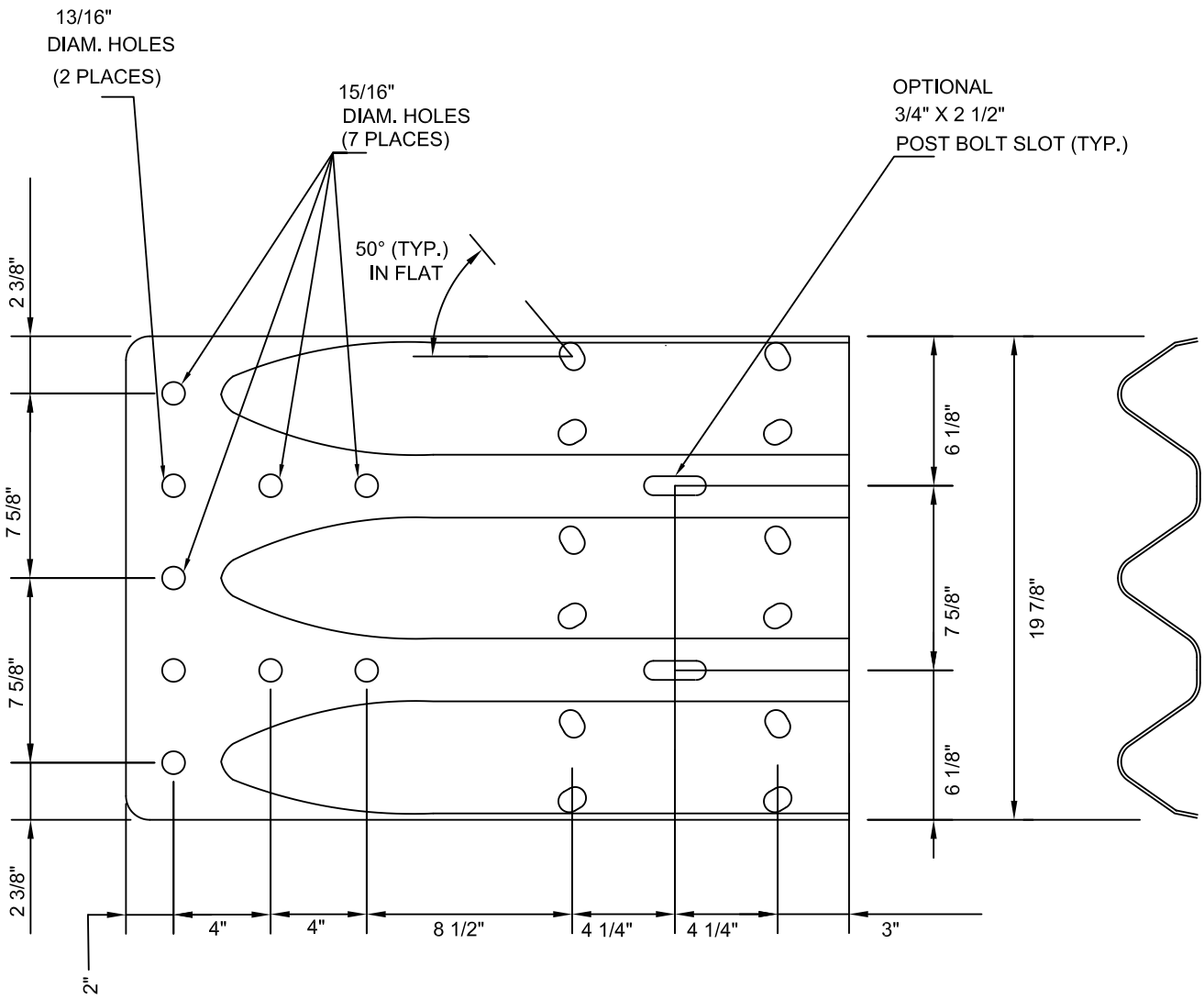

NOTES: 1. BASE METAL THICKNESS = 1/8" (10 GAGE)
2. SEE E 401.4.1

massDOT Massachusetts Department of Transportation Highway Division
CONSTRUCTION STANDARDS

STEEL THRIE BEAM HIGHWAY TERMINAL CONNECTOR

DATE OF ISSUE
MARCH 2012

DRAWING NUMBER
E 401.5.3

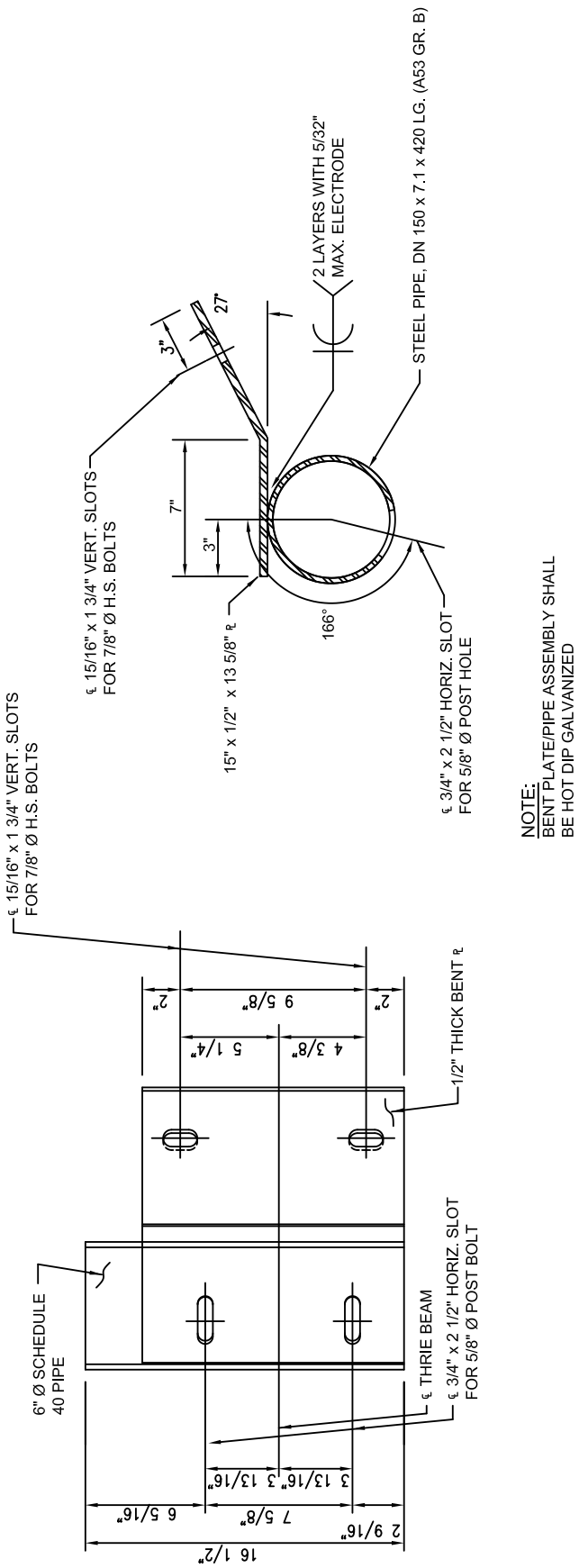

NOTE:
BENT PLATE/PIPE ASSEMBLY SHALL
BE HOT DIP GALVANIZED

COLLAPSING TUBE ASSEMBLY

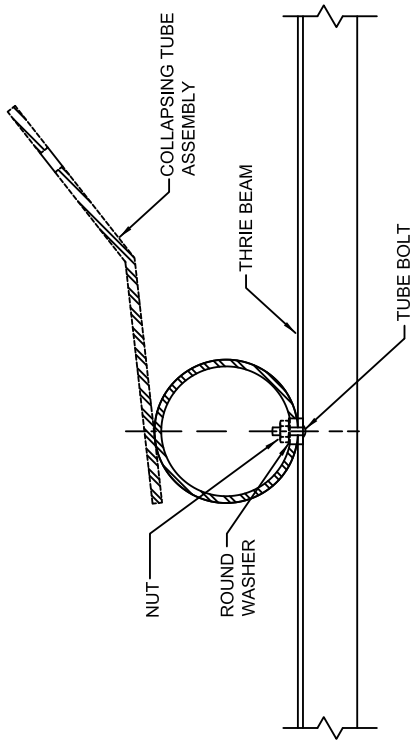

RAIL/TUBE CONNECTION

massDOT
Massachusetts Department of Transportation
Highway Division
CONSTRUCTION STANDARDS

BRIDGE RAIL TO HIGHWAY GUARD COLLAPSING TUBE

DATE OF ISSUE
MARCH 2012

DRAWING NUMBER
E 401.5.4

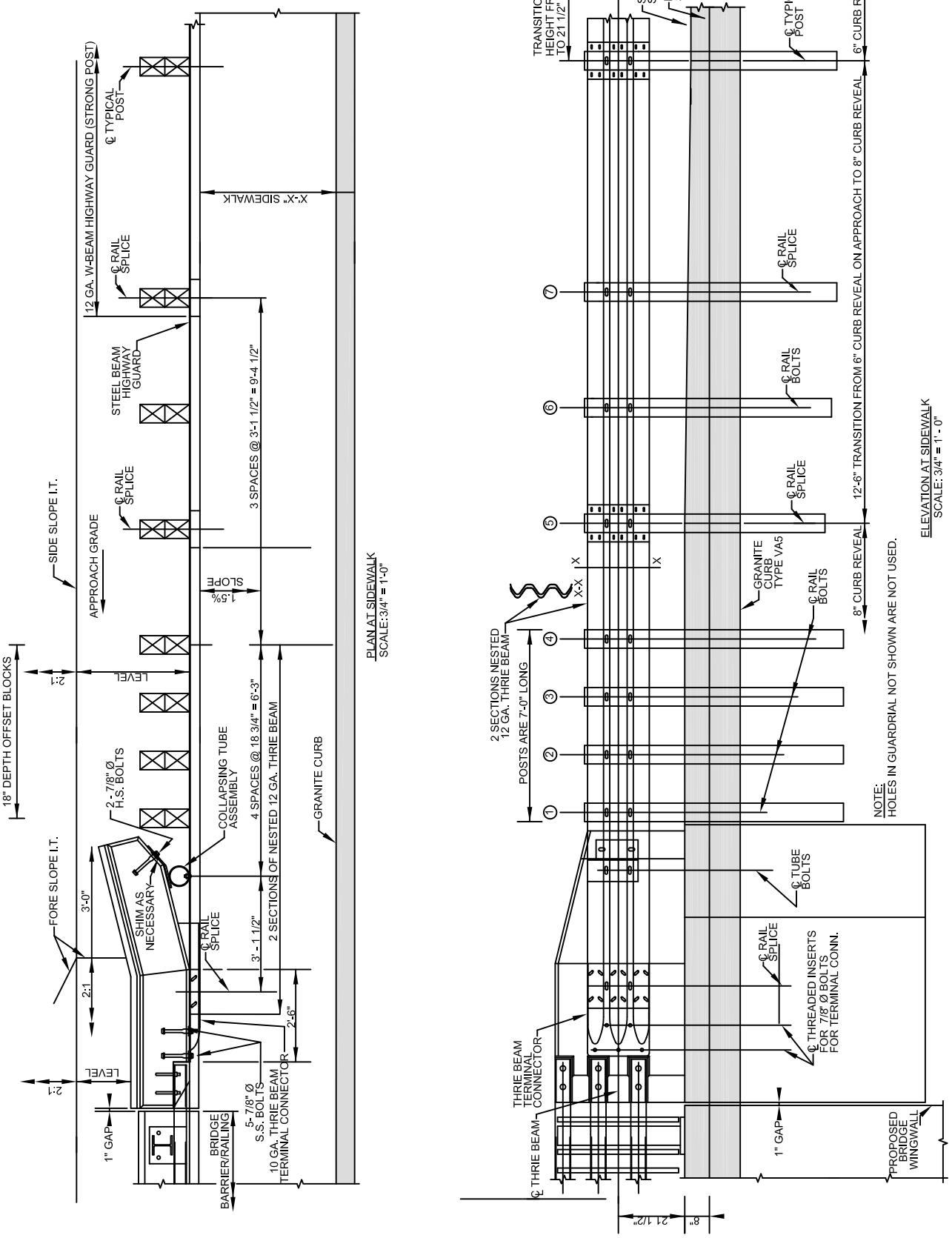

massDOT
Massachusetts Department of Transportation
Highway Division
CONSTRUCTION STANDARDS

BRIDGE RAIL TO HIGHWAY GUARD TRANSITION AT SIDEWALK

DATE OF ISSUE
MARCH 2012

DRAWING NUMBER
E 401.5.5

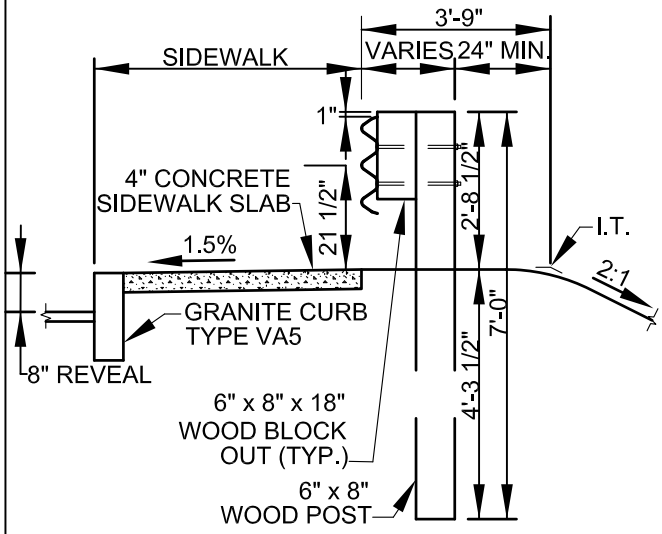

THRIE BEAM POSTS 1-4

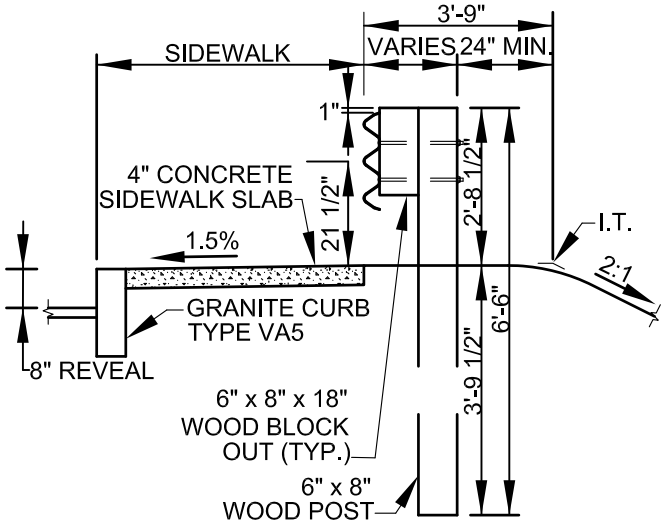

THRIE BEAM POST 5

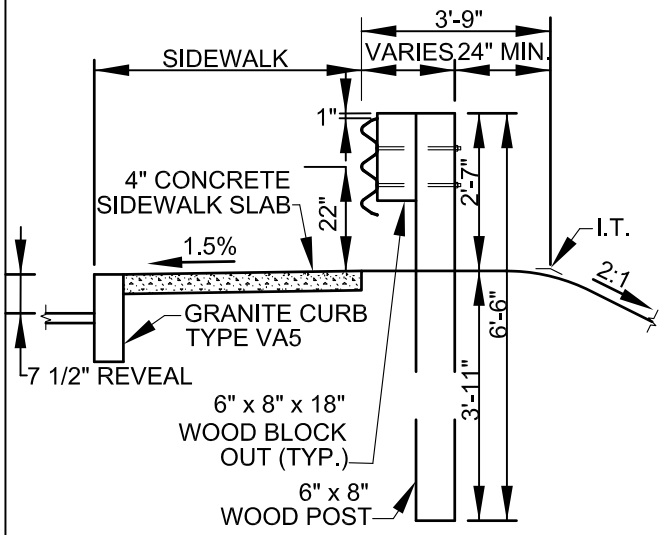

W TO THRIE BEAM TRANSITION POST 6

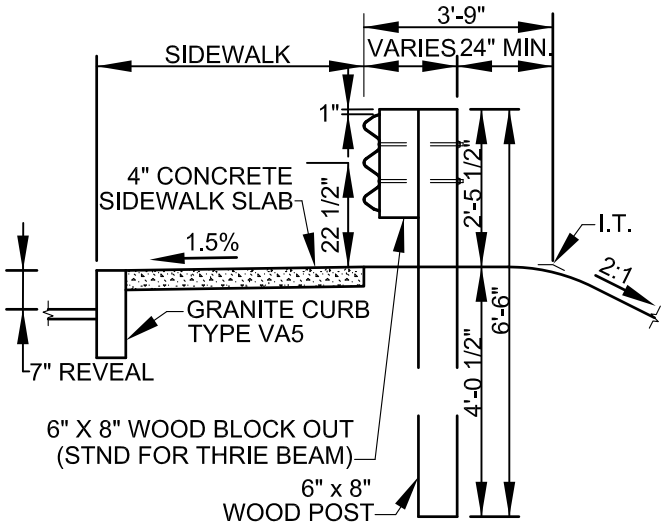

W-BEAM POST 7

massDOT
Massachusetts Department of Transportation
Highway Division
CONSTRUCTION STANDARDS

BRIDGE RAIL TO HIGHWAY GUARD TRANSITION AT SIDEWALK – SECTIONS

DATE OF ISSUE
MARCH 2012

DRAWING NUMBER
E 401.5.6

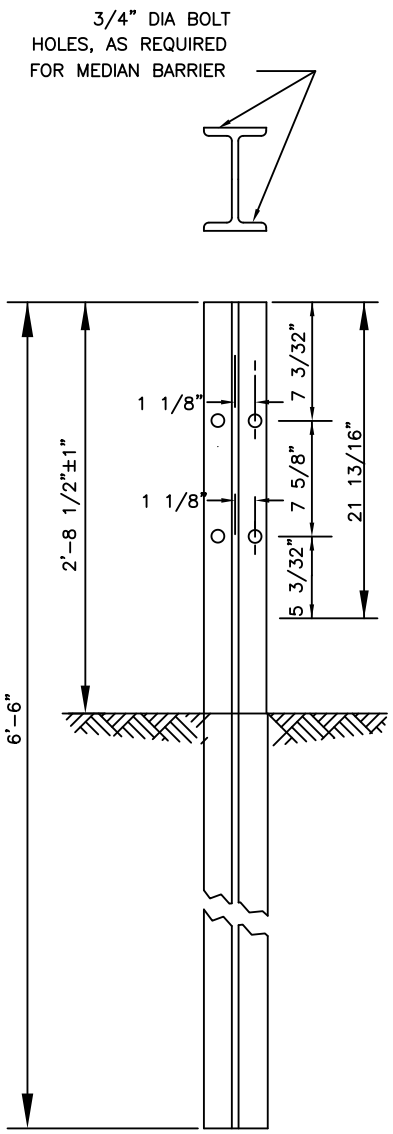

POST

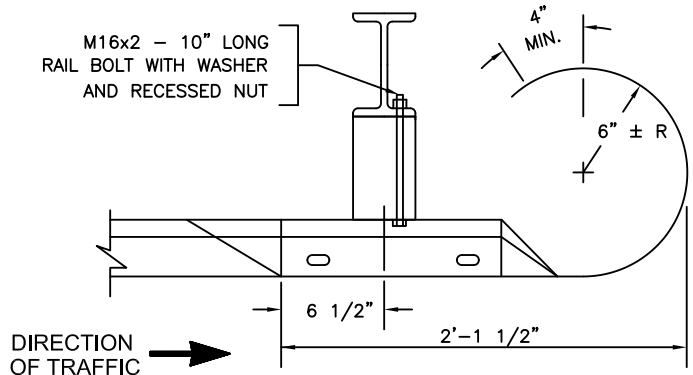

PLAN

TERMINAL SECTION

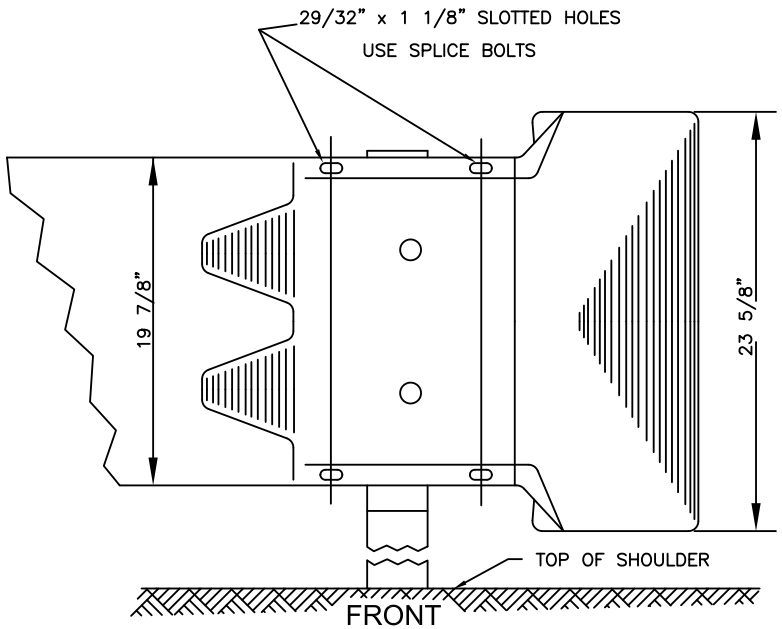

FRONT

TERMINAL SECTION
DOWN STREAM OF TRAFFIC

DIRECTION OF TRAFFIC

NOTES:

1. POST TO BE FABRICATED FROM W6"x9" STEEL SECTIONS AS SHOWN.
2. POST TO BE 3/4" DIA. (STD GALV WASHERS TO BE USED AT THESE CONNECTIONS).
3. FOR RAIL BOLT SLOT DETAILS SEE E 401.7.0.
4. FOR BLOCK-OUT DETAILS SEE E 401.21.0.

massDOT Massachusetts Department of Transportation Highway Division

CONSTRUCTION STANDARDS

STEEL THRIE BEAM HIGHWAY GUARD DETAILS

DATE OF ISSUE MARCH 2012

DRAWING NUMBER **E 401.6.0R**

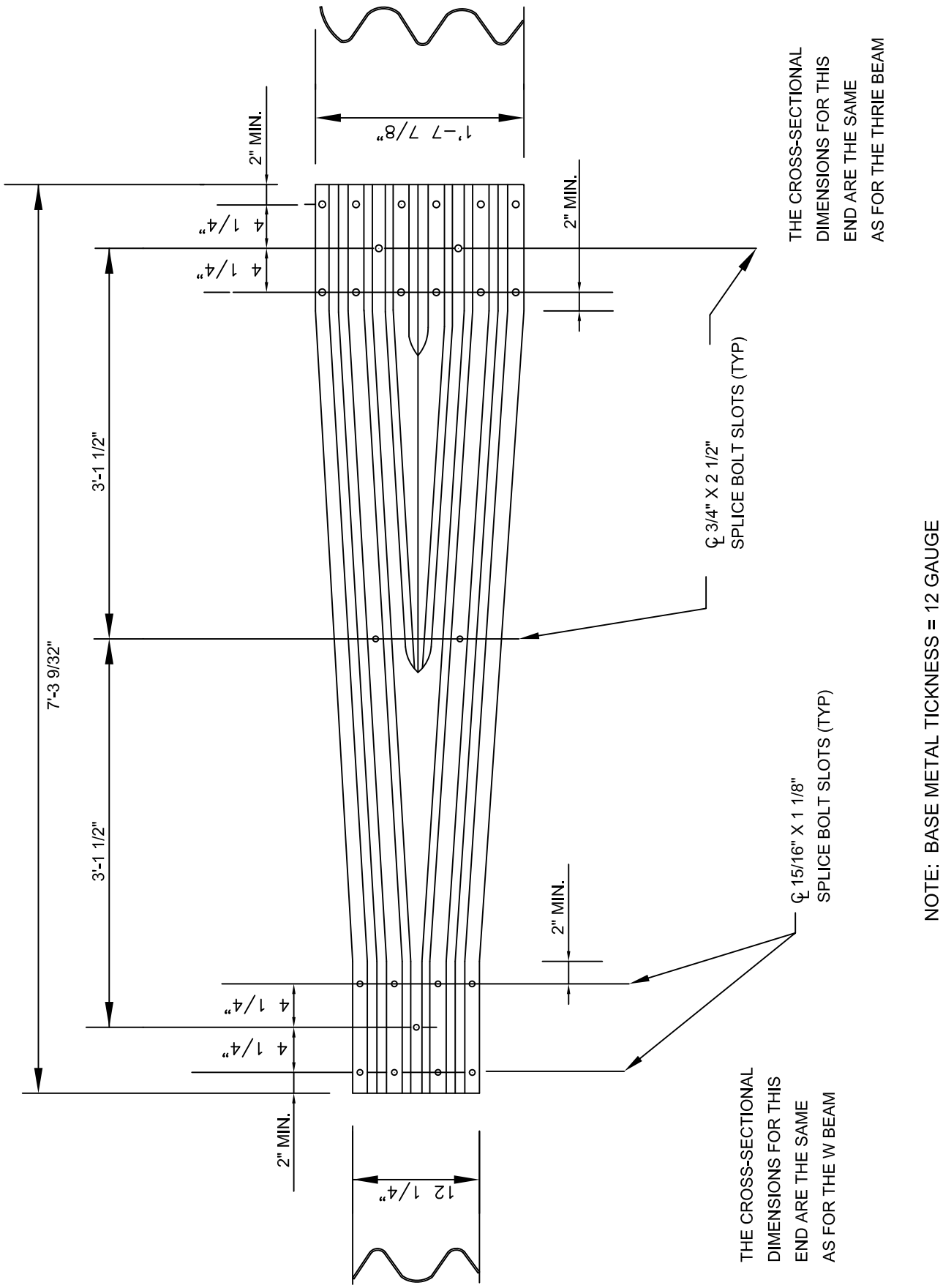

massDOT
Massachusetts Department of Transportation
Highway Division
CONSTRUCTION STANDARDS

STEEL HIGHWAY GUARD TRANSITION BEAM

DATE OF ISSUE
MARCH 2012

DRAWING NUMBER
E 401.6.1

massDOT
Massachusetts Department of Transportation
Highway Division

CONSTRUCTION STANDARDS

STEEL W BEAM HIGHWAY GUARD

RAIL DETAILS

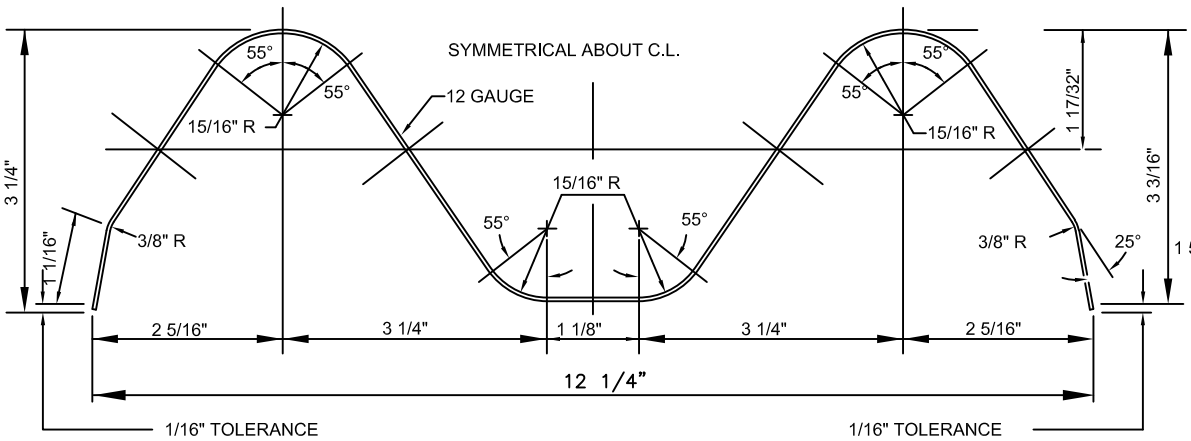

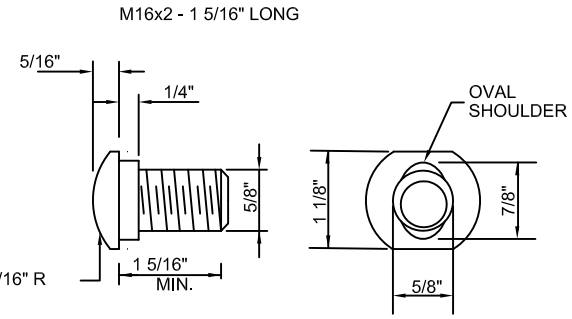

ALL BOLTS AND NUTS TO BE GALV.

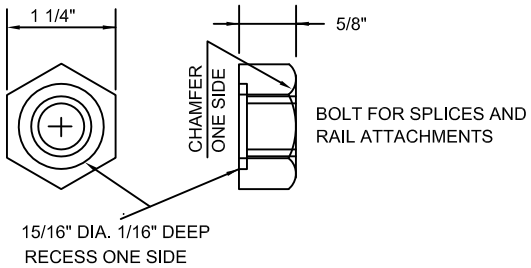

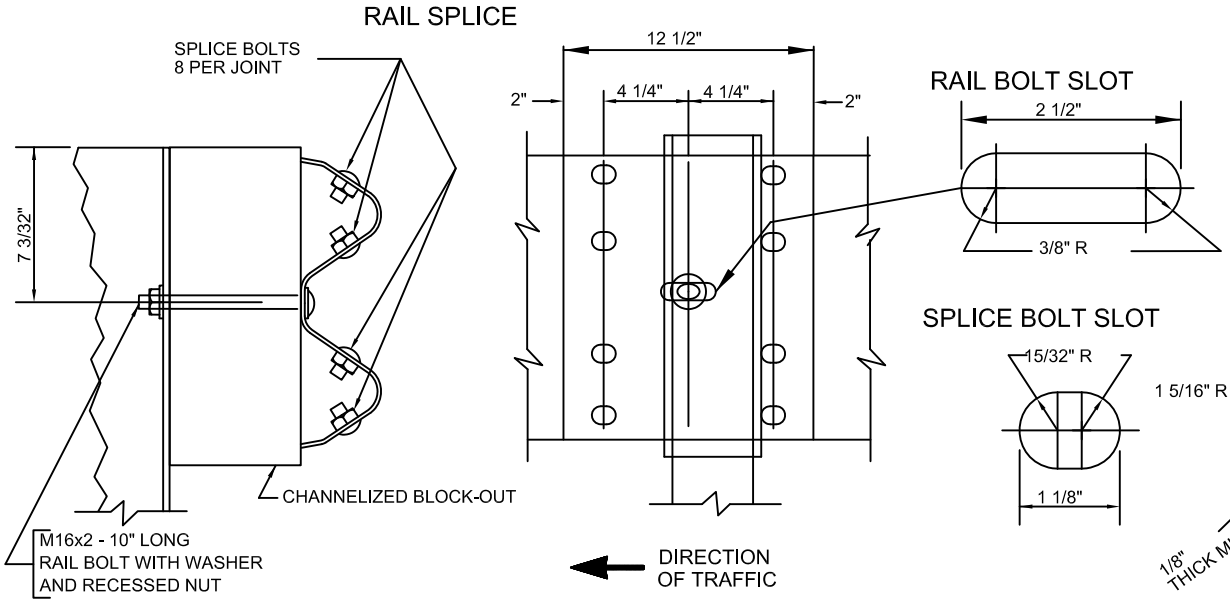

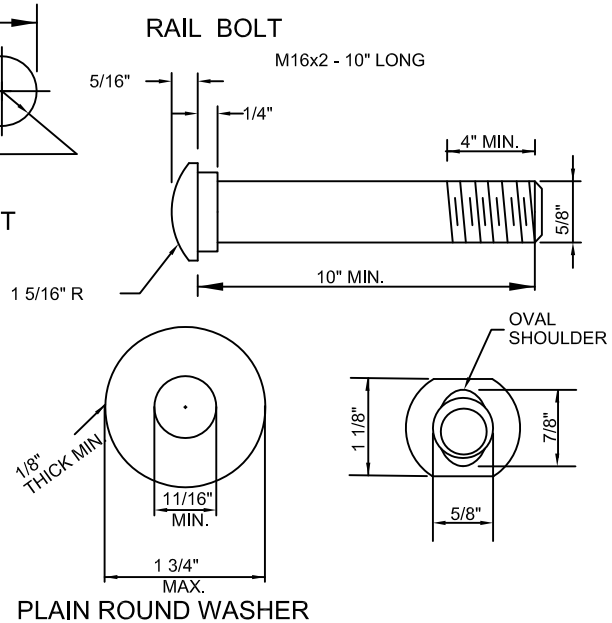

NOTES:

1. FOR POST AND BLOCK-OUT DETAILS SEE E 401.8.0 AND E 401.20.0
2. LAP DOWNSTREAM IN DIRECTION OF TRAFFIC.

DATE OF ISSUE
MARCH 2012

DRAWING NUMBER
E 401.7.0

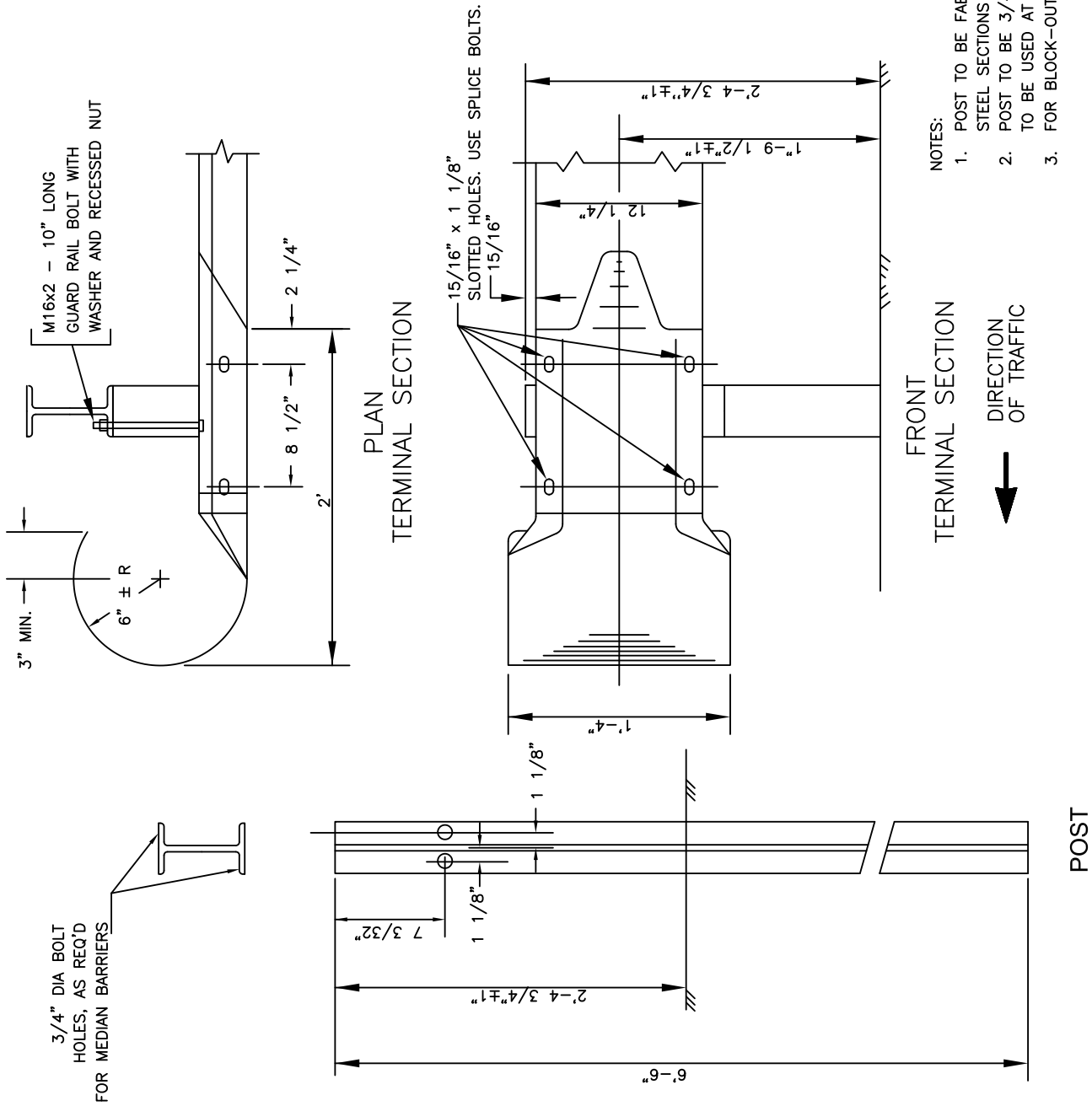

NOTES:

1. POST TO BE FABRICATED FROM W6"X9" STEEL SECTIONS AS SHOWN.
2. POST TO BE 3/4" DIA. (STD GALV WASHERS TO BE USED AT THESE CONNECTIONS).
3. FOR BLOCK-OUT DETAILS SEE E 401.20.0.

massDOT
Massachusetts Department of Transportation
Highway Division
CONSTRUCTION STANDARDS

STEEL W BEAM HIGHWAY GUARD

POSTS AND TERMINAL SECTION DETAILS

DATE OF ISSUE
MARCH 2012

DRAWING NUMBER
E 401.8.0R

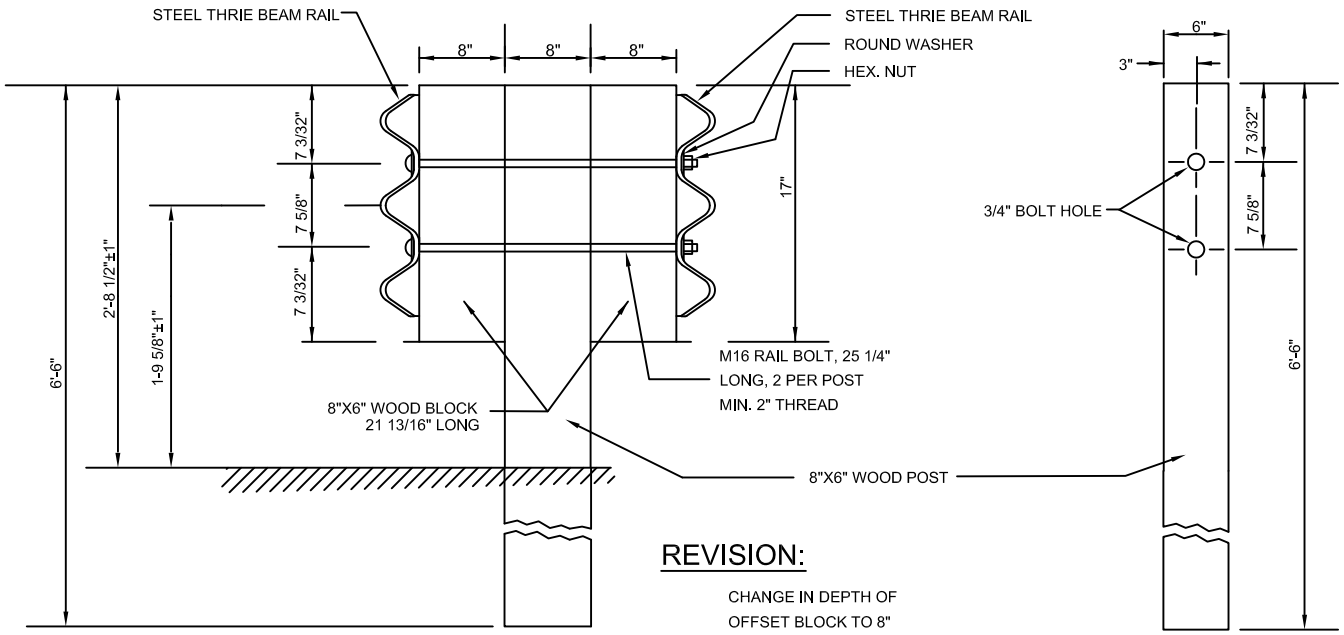

REVISION:

CHANGE IN DEPTH OF
OFFSET BLOCK TO 8"

DOUBLE FACE

POST DETAIL

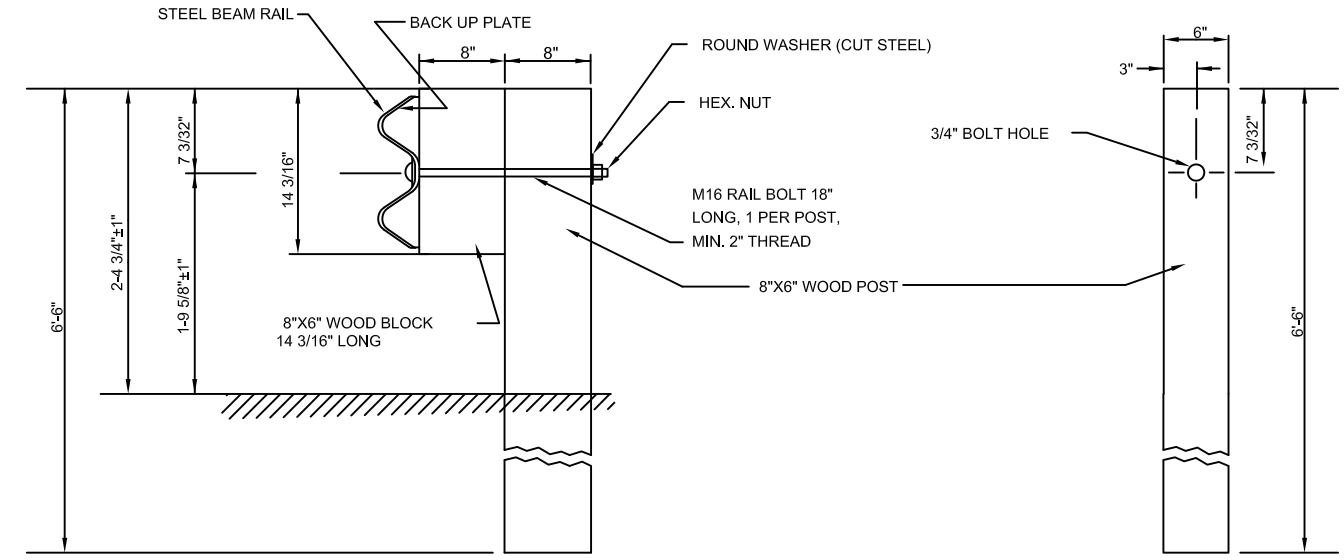

SINGLE FACE *

POST DETAIL

* WHEN PLACED IN MEDIAN CHANGE TO THRIE BEAM, AND CHANGE HEIGHT TO 2'-8 1/2"±1".

NOTES:

1. POST SPACING, APPROACH END & TRAILING ENDS ARE THE SAME AS THOSE SHOWN FOR STEEL "H" POSTS.
2. ALL NUTS, BOLTS & WASHERS ARE TO BE GALVANIZED.
3. ALL MATERIALS & DIMENSIONS OF FITTINGS NOT SHOWN ABOVE ARE TO BE SIMILAR TO THE CORRESPONDING ELEMENTS SHOWN FOR STEEL "H" POSTS.
4. TERMINAL SECTIONS FOR DOUBLE FACE & SINGLE FACE GUARD RAIL ARE SHOWN ON DRAWINGS E 401.6.0, E 401.8.0
5. ALL SPLICES ARE TO BE MADE AT POSTS.
6. FOR THE TYPE OF WOOD & WOOD TREATMENT, OTHER MATERIALS & METHODS OF CONST., SEE STANDARD SPECIFICATIONS & SPECIAL PROVISIONS.
7. FOR DETAILS OF SLOT IN BACK-UP PLATE SEE E 401.7.0 & E 401.8.0
8. BACK-UP PLATE IS PLACED BEHIND RAIL ELEMENTS AT INTERMEDIATE POSTS, i.e. NON SPLICE LOCATION.
9. STEEL POSTS ARE TO BE SUBSTITUTED AT THE SAME BID PRICE, FOR CERTAIN WOOD POSTS IN A WOOD POST RUN WHEN CEMENT CONCRETE EMBEDMENT IS REQUIRED.

massDOT Massachusetts Department of Transportation Highway Division

CONSTRUCTION STANDARDS

STEEL BEAM HIGHWAY GUARD WITH WOOD POST

DATE OF ISSUE
MARCH 2012

DRAWING NUMBER
E 401.10.0

massDOT
Massachusetts Department of Transportation
Highway Division

CONSTRUCTION STANDARDS

SPECIAL BASE ANCHOR FOR HIGHWAY GUARD INSTALLATION ON CONCRETE

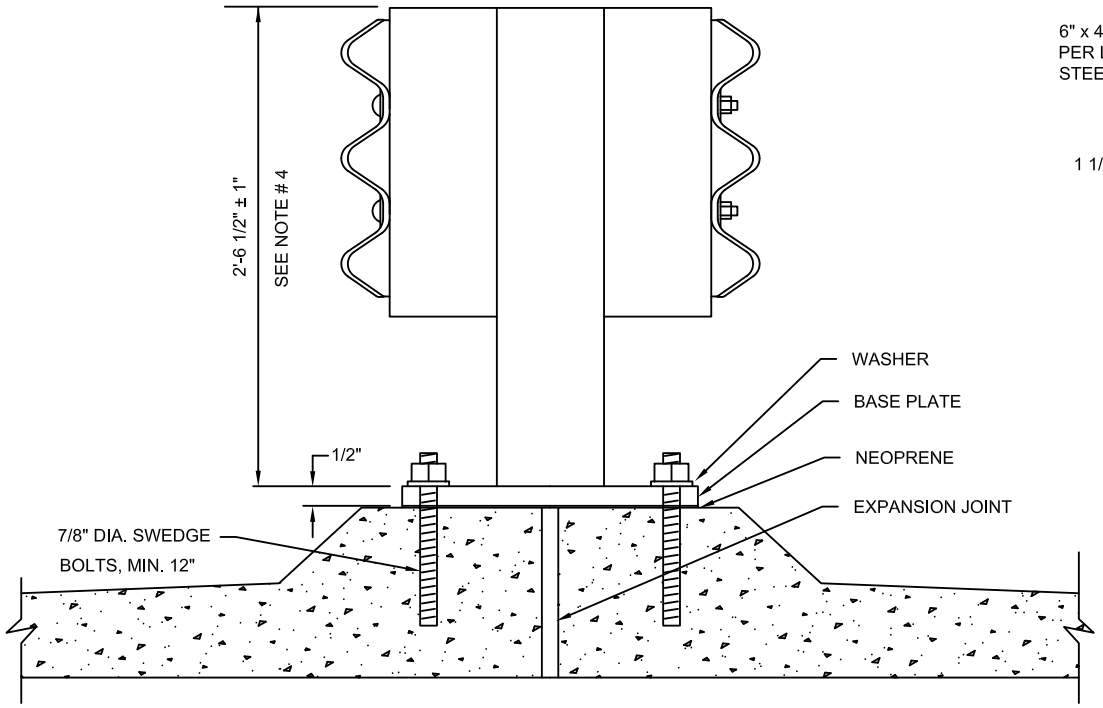

DETAIL OF POST OVER EXPANSION JOINT

SEE NOTE # 5 WHEN THERE IS NO EXPANSION JOINT.

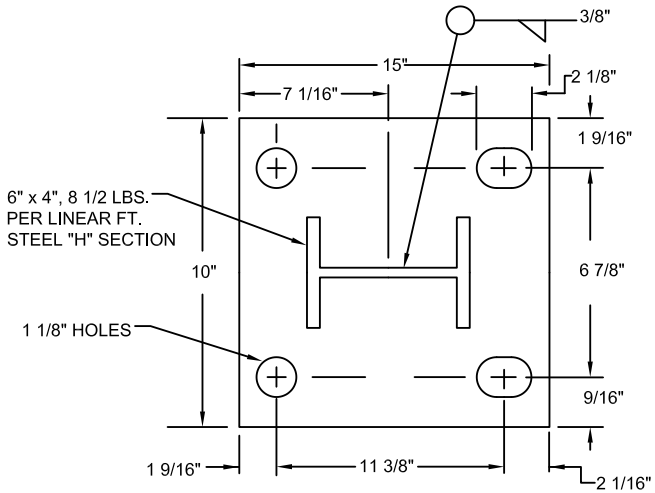

DETAIL OF BASE PLATE

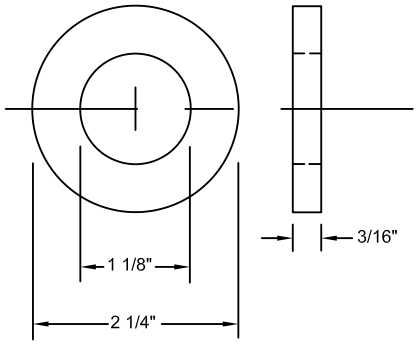

DETAIL OF WASHER

GALVANIZED

NOTES:

1. SWEDGE BOLTS, NUTS AND WASHERS ARE TO BE GALVANIZED.
2. HOLES FOR SWEDGE BOLTS SHALL BE 10" DEEP. SWEDGE BOLTS TO BE SET IN EPOXY RESIN, AS APPROVED BY THE ENGINEER.
3. BASE PLATE IS TO BE SET ON 3/32" NEOPRENE.
4. DETAILS OF HIGHWAY GUARD ARE SHOWN ON DRAWINGS E 401.1.0, E 401.5.0 & E 401.6.0
5. THE BASE PLATE AND CONSTRUCTION METHOD SHOWN ABOVE ARE ALSO USED WHEN THERE ARE NO EXPANSION JOINTS IN THE CEMENT CONCRETE.
6. CONTRACTOR SHALL BE RESPONSIBLE FOR ALL FIELD MEASUREMENTS.
7. MAXIMUM OF TWO (2) POSTS IN A ROW OF GUARDRAIL.

DATE OF ISSUE
MARCH 2012

DRAWING NUMBER
E 401.11.0R

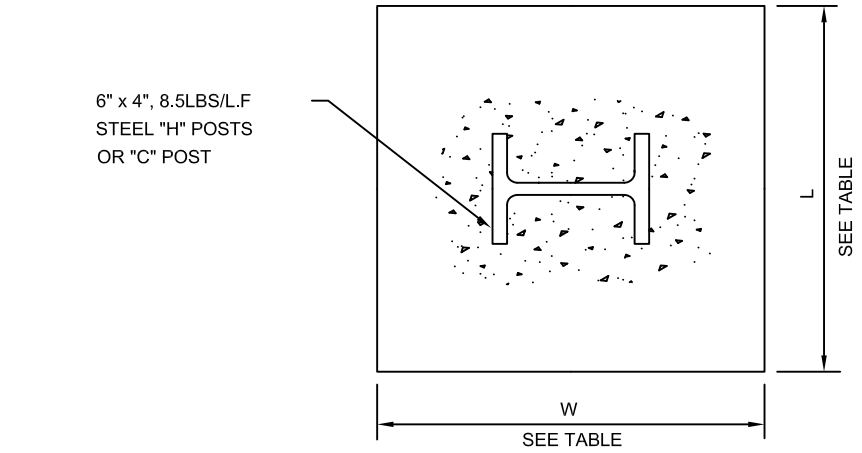

PLAN

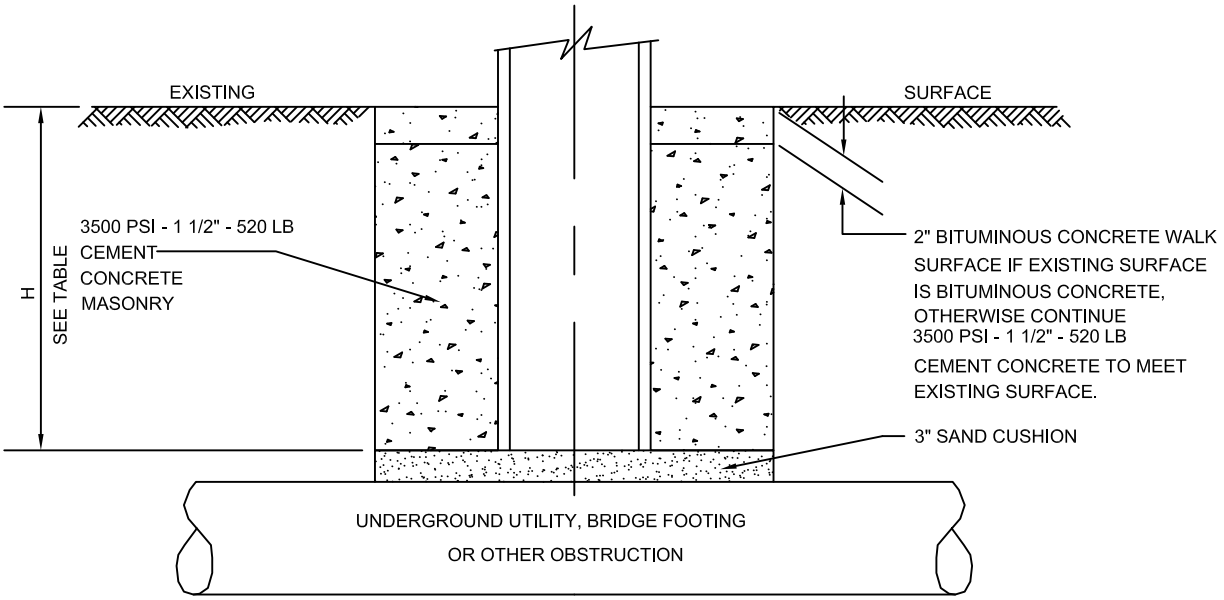

ELEVATION

HEIGHT OF EXISTING SURFACE ABOVE TOP OF SAND CUSHION	DIMENSION OF CONCRETE ENVELOPE		
	H HEIGHT OF SURFACE ABOVE SAND CUSHION	W	L
1'-0" - 1'-6"	VARIES 1'-0" TO 1'-6"	2'-6"	2'-6"
1'-6" - 2'-6"	VARIES 1'-6" TO 2'-6"	2'-0"	2'-0"
OVER 2'-6"	2'-6"	1'-6"	1'-6"

NOTE:

1. OFFSET BRACKETS ARE TO BE INSTALLED AND RAILS ARE TO BE MOUNTED AS SHOWN ON DRAWINGS E 401.1.0 AND E 401.5.0 - E 401.9.0
2. NOT TO BE USED ON MORE THAN 2 POSTS IN A ROW.

massDOT Massachusetts Department of Transportation Highway Division
CONSTRUCTION STANDARDS

MODIFIED HIGHWAY GUARD POST INSTALLATION

WHERE STANDARD EMBEDMENT IS NOT FEASIBLE

DATE OF ISSUE
MARCH 2012

DRAWING NUMBER
E 401.12.0

massDOT
Massachusetts Department of Transportation
Highway Division

CONSTRUCTION STANDARDS

STEEL THRIE BEAM HIGHWAY GUARD

MEDIAN – BARRIER

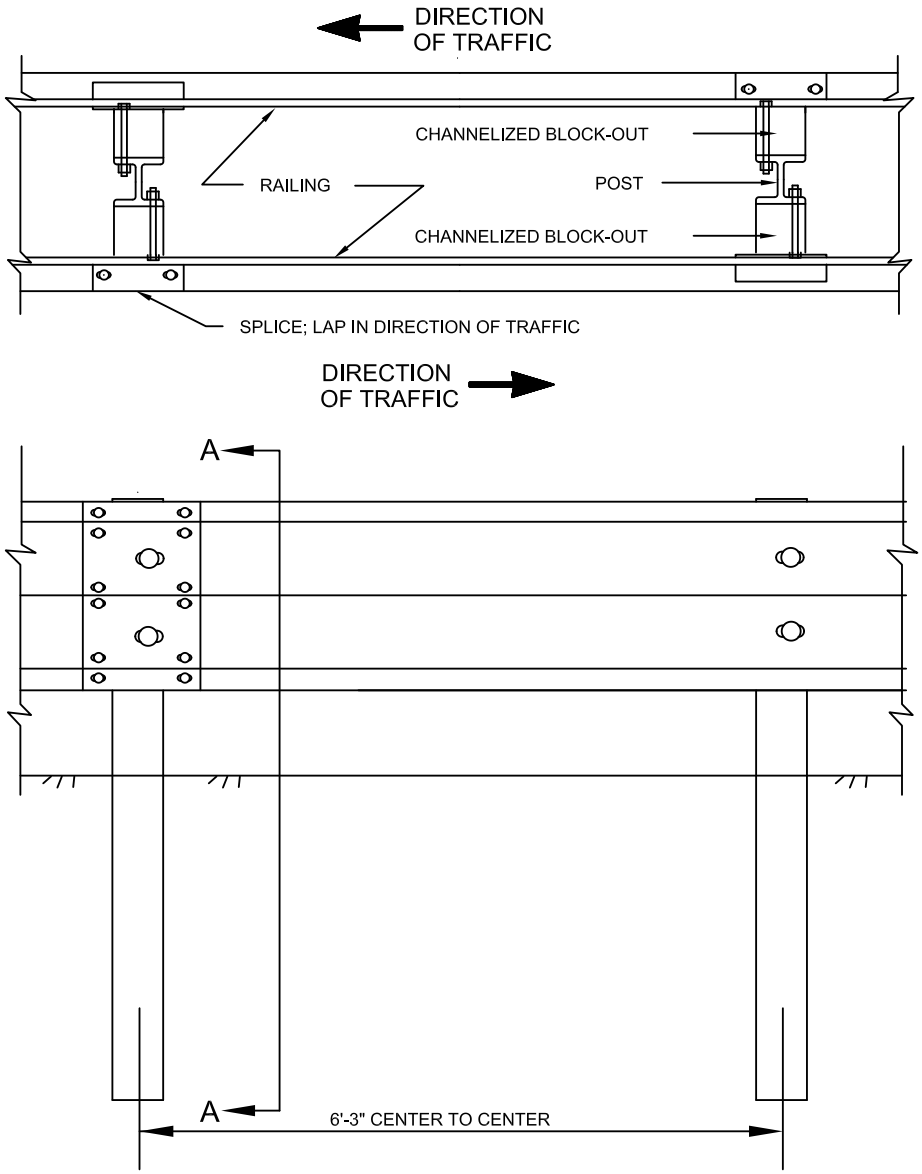

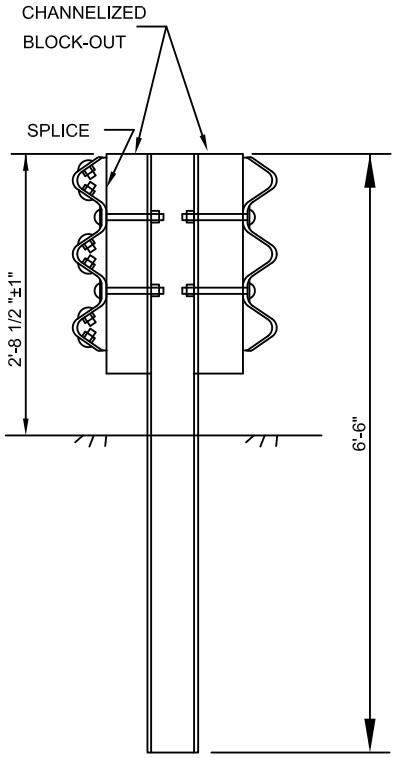

SECTION A-A

NOTES:

1. ALL POSTS TO BE SPACED 6'-3" CENTER TO CENTER
2. FOR DESCRIPTION, MATERIALS AND CONSTRUCTION METHODS SEE STANDARD SPECIFICATIONS.
3. FOR DETAILS OF BARRIER COMPONENTS SEE E 401.5.0 AND E 401.6.0.
4. RAIL SPLICES ON DOUBLE FACED HIGHWAY GUARD ARE TO BE STAGGERED. (i.e, SPLICES) ARE NOT TO BE MADE ON BOTH SIDES OF THE SAME POST.

DATE OF ISSUE
MARCH 2012

DRAWING NUMBER
E 401.16.0R

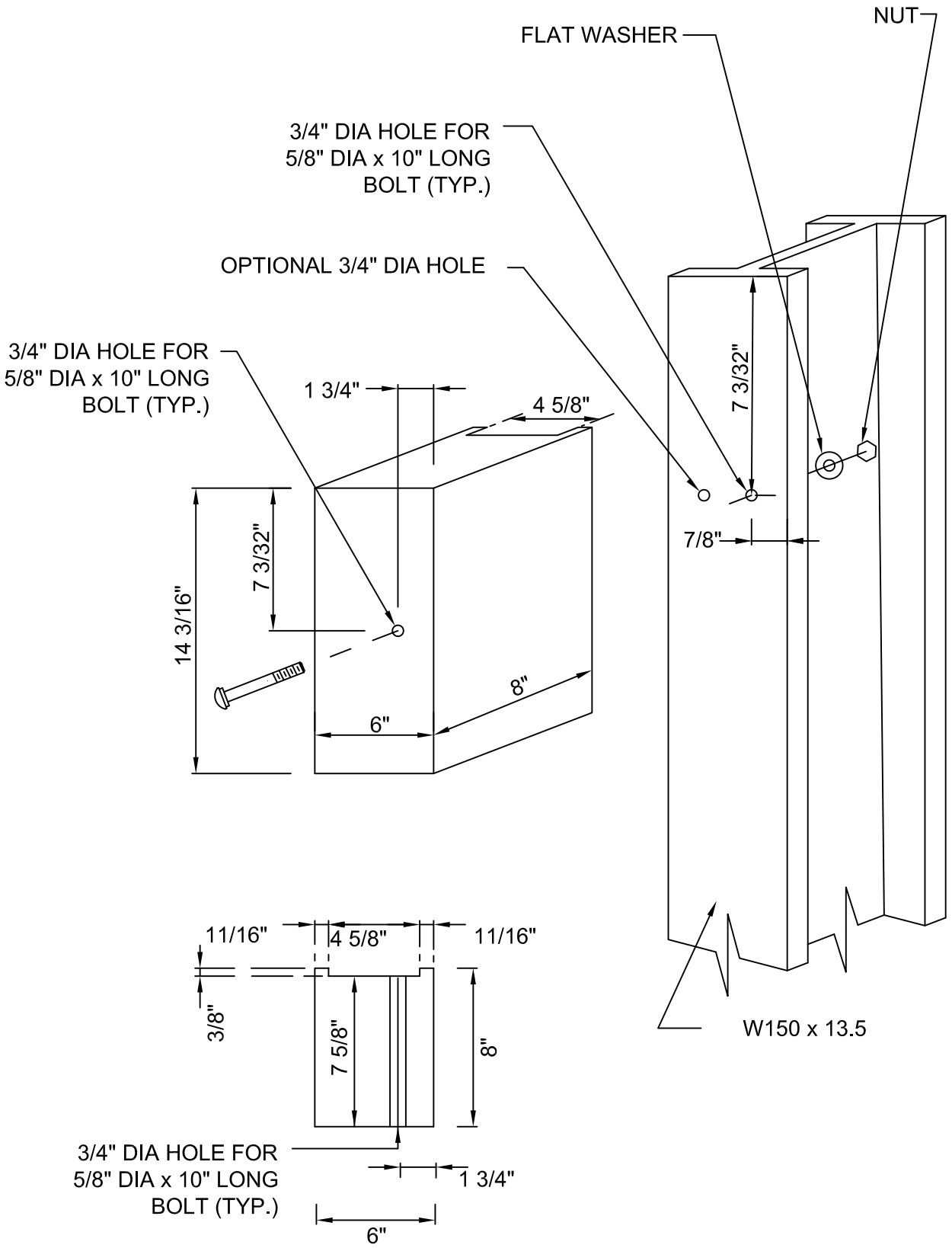

massDOT
Massachusetts Department of Transportation
Highway Division
CONSTRUCTION STANDARDS

OFFSET BLOCKS FOR STEEL W BEAM HIGHWAY GUARD

DATE OF ISSUE
MARCH 2012

DRAWING NUMBER
E 401.20.0

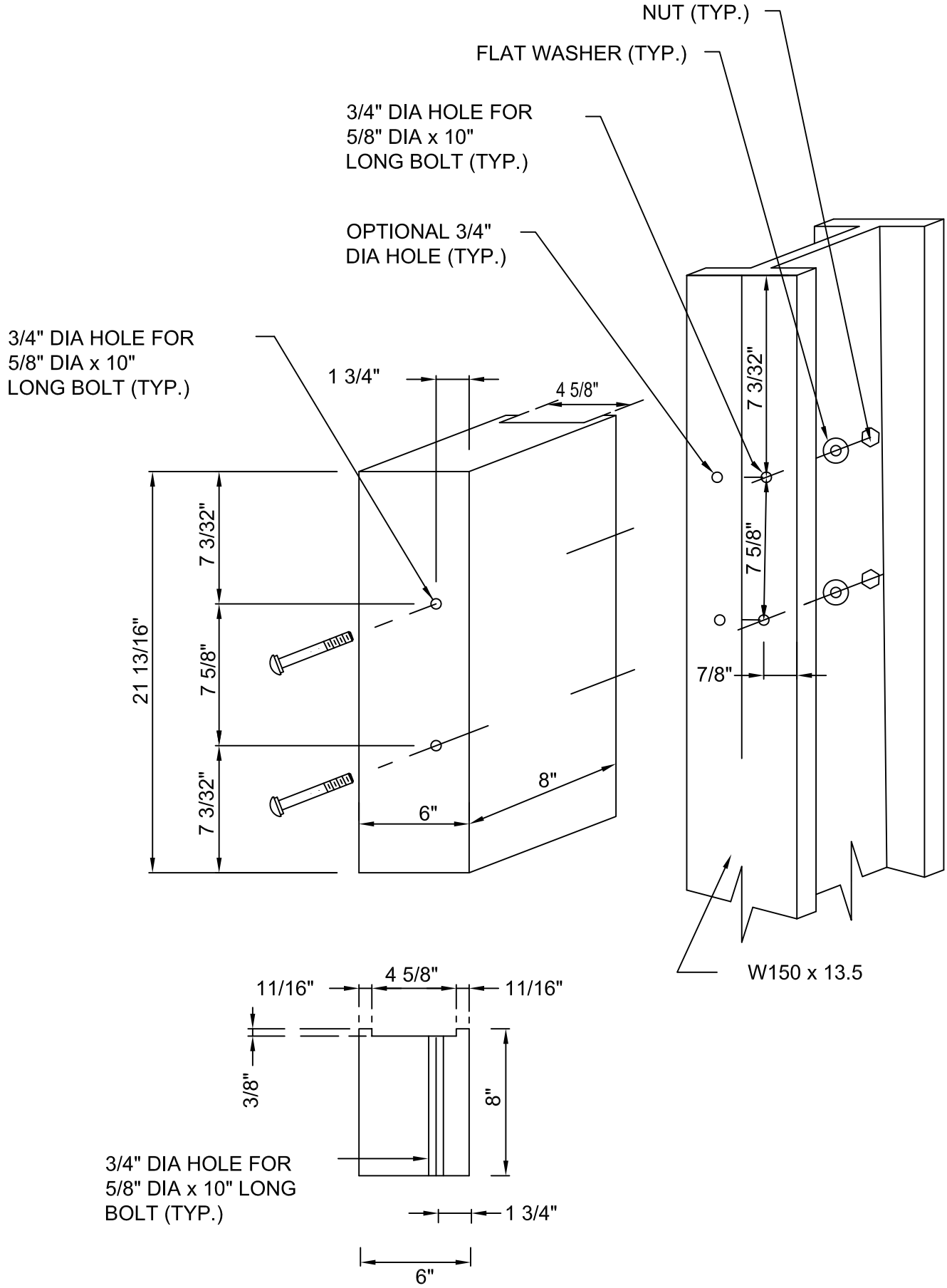

massDOT
Massachusetts Department of Transportation
Highway Division
CONSTRUCTION STANDARDS

OFFSET BLOCKS FOR STEEL THRIE BEAM HIGHWAY GUARD

DATE OF ISSUE
MARCH 2012

DRAWING NUMBER
E 401.21.0

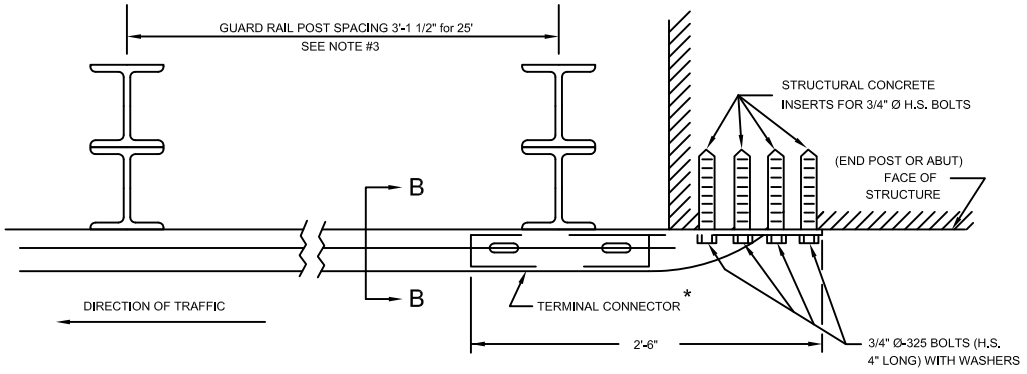

PLAN

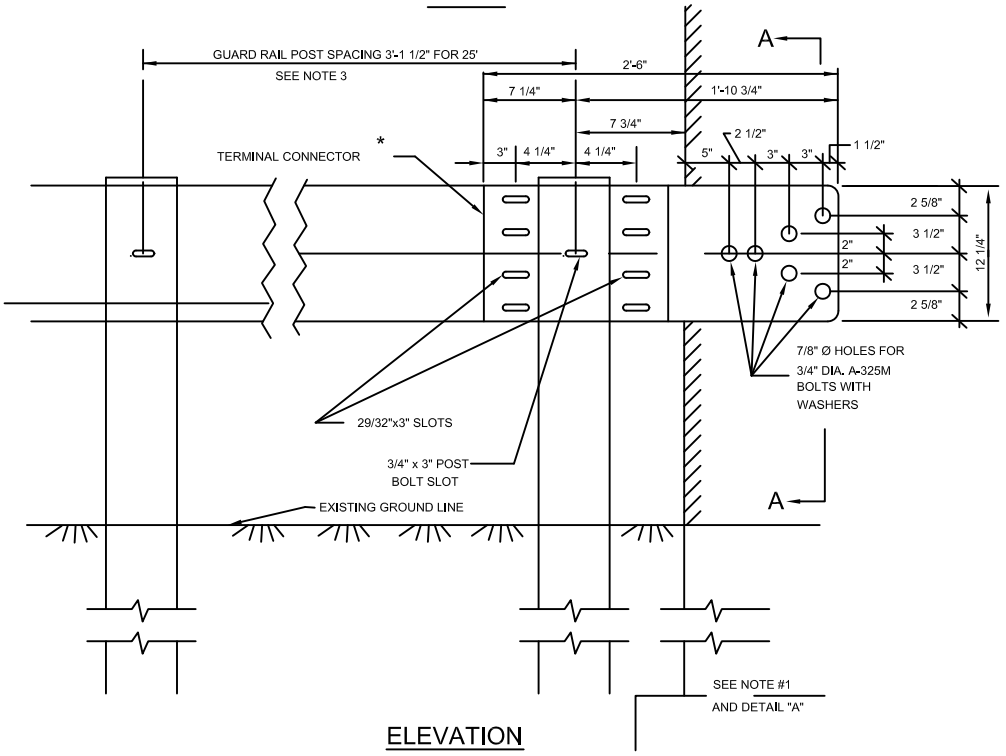

ELEVATION

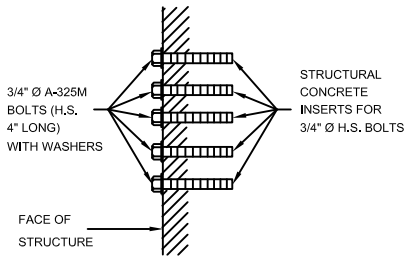

SECTION A-A

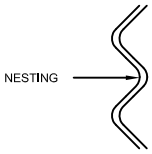

SECTION B-B

2 RAILS

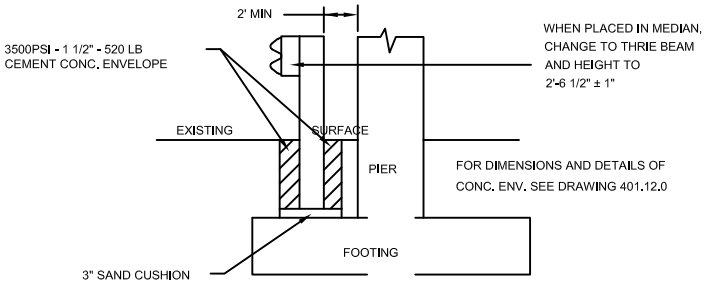

DETAIL "A"

SEE NOTE #1

* SEE BRIDGE STANDARDS FOR DETAILS; LAP IN DIRECTION OF TRAVEL.

NOTES:

1. WHEN THE HIGHWAY GUARD POST FALLS ON THE FOOTING OF THE STRUCTURE AND THE DISTANCE FROM THE SURFACE TO THE TOP OF THE FOOTING IS LESS THAN 3'-3" THE POST SHALL BE CUT AND SET ON THE FOOTING IN A CEMENT CONCRETE ENVELOPE AS SHOWN IN DETAIL "A".
2. CONSTRUCTION DETAILS SHOWN ALSO APPLY TO WOOD AND CHARLEY (C) POST INSTALLATIONS.
3. THE DOUBLE RAIL ELEMENT IS TO CONSIST OF NESTING TWO (2) 12 GAUGE RAIL ELEMENTS FOR A DISTANCE OF 25', THE SHORT RAIL (25') IS TO BE NESTED BEHIND THE CONTINUOUS RAIL, SEE SECTION B-B.
4. BACK UP PLATE NOT REQUIRED WHERE RAIL IS TO BE NESTED.

massDOT Massachusetts Department of Transportation Highway Division CONSTRUCTION STANDARDS	STEEL W BEAM HIGHWAY GUARD TERMINAL CONNECTORS ON EXIST. BRIDGE W-RAIL LEADING END AT ABUTMENTS & END POSTS	DATE OF ISSUE MARCH 2012
		DRAWING NUMBER **E 402.2.0**

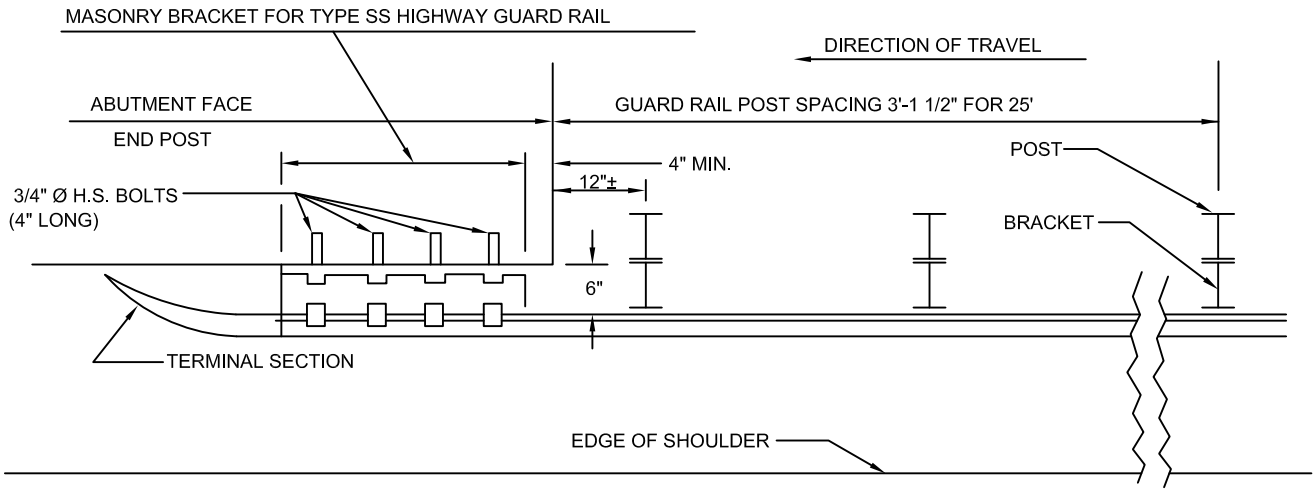

PLAN

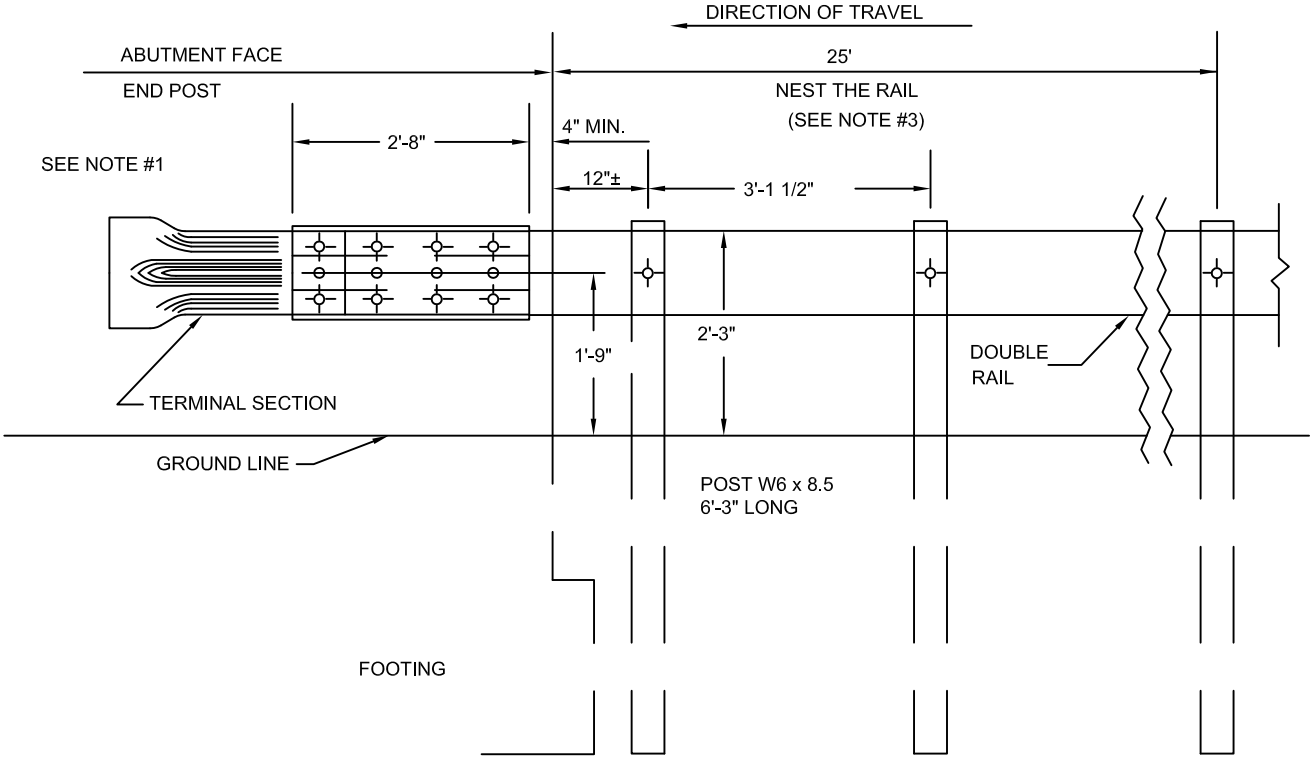

ELEVATION

NOTES:

1. FOR BRACKET DETAIL SEE DRAWINGS E 402.4.0 AND E 402.5.0
2. FOR NESTING DETAIL SEE DRAWING E 402.2.0
3. BACK UP PLATE NOT REQUIRED WHERE RAILING IS NESTED, SEE SECTION B-B DRAWING E 402.2.0

massDOT Massachusetts Department of Transportation Highway Division
CONSTRUCTION STANDARDS

INSTALLATION OF STEEL W BEAM HIGHWAY GUARD (TRAILING END) AT EXISTING BRIDGE ABUTMENTS AND END POSTS (W–RAIL)

DATE OF ISSUE
MARCH 2012

DRAWING NUMBER
E 402.3.0

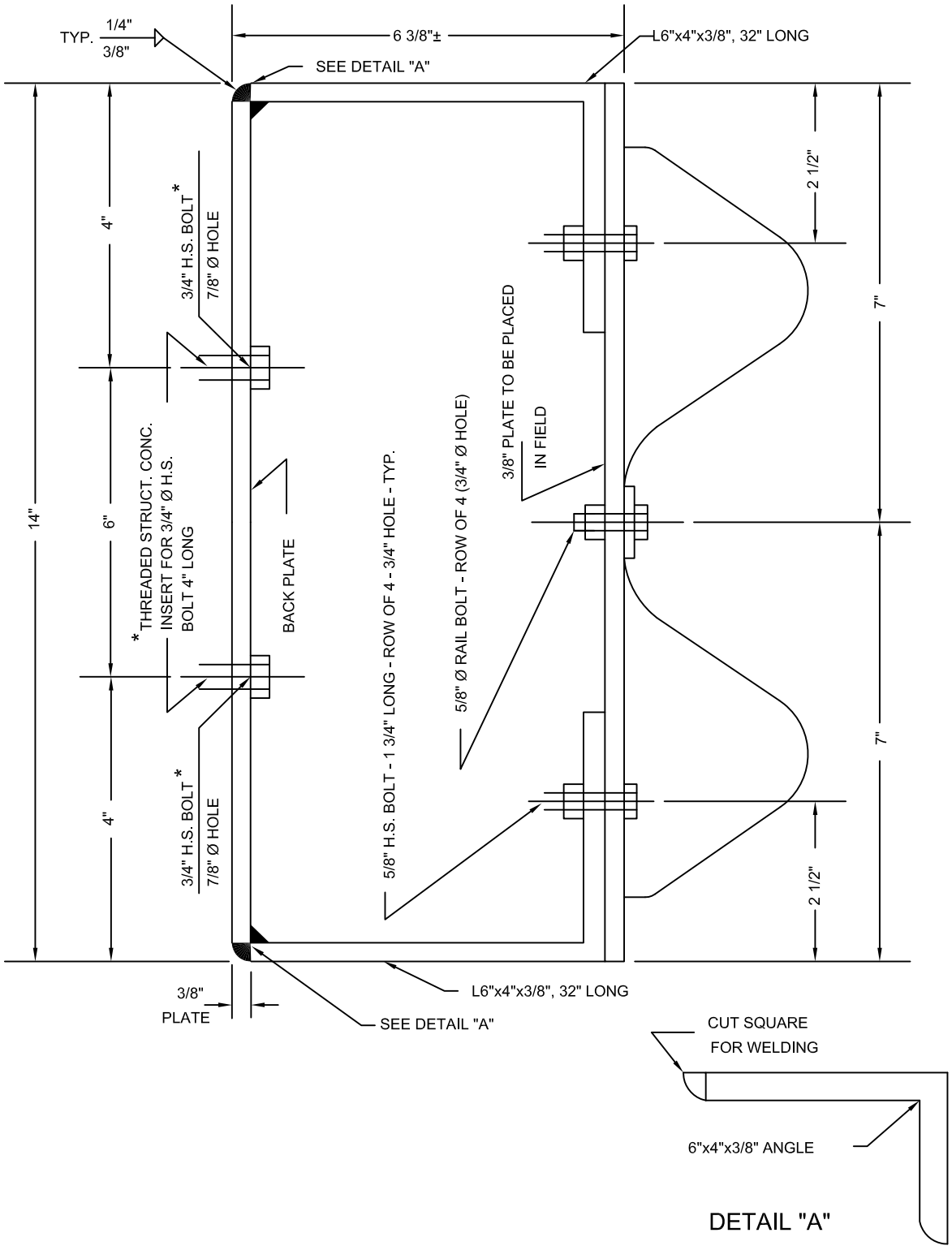

* IF BOLT IS THRU EXISTING HWY. GD. RECESS THAT IS FILLED WITH CONCRETE ADD THE DEPTH OF RECESS TO THE 4" LENGTH OF INSERT SIMILARLY TO 3/4" BOLT.

NOTES:

1. ALL EXISTING HWY. GD. RECESSES TO BE FILLED WITH EPOXY CONCRETE.
2. ALL WELDING IS TO BE DONE IN THE SHOP

massDOT Massachusetts Department of Transportation Highway Division CONSTRUCTION STANDARDS	MASONRY BRACKET FOR STEEL W BEAM HIGHWAY GUARD ON ABUTMENTS AND END POSTS (TRAILING END)	DATE OF ISSUE MARCH 2012 DRAWING NUMBER **E 402.4.0**

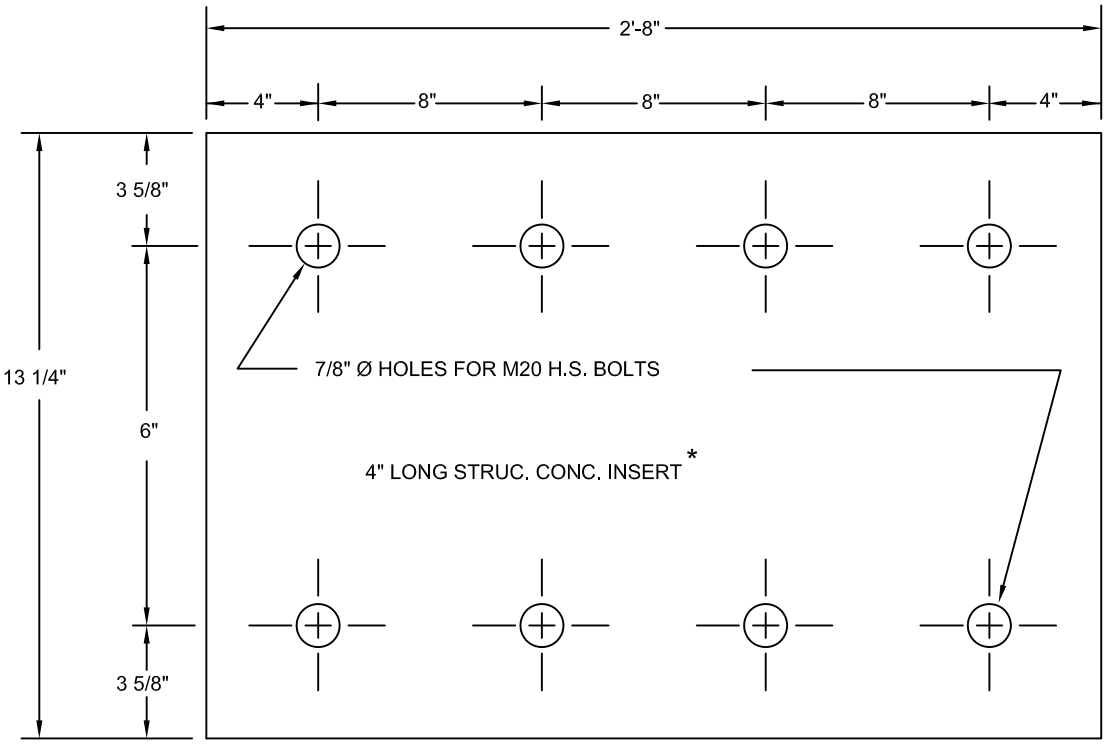

PLAN - BACK PLATE

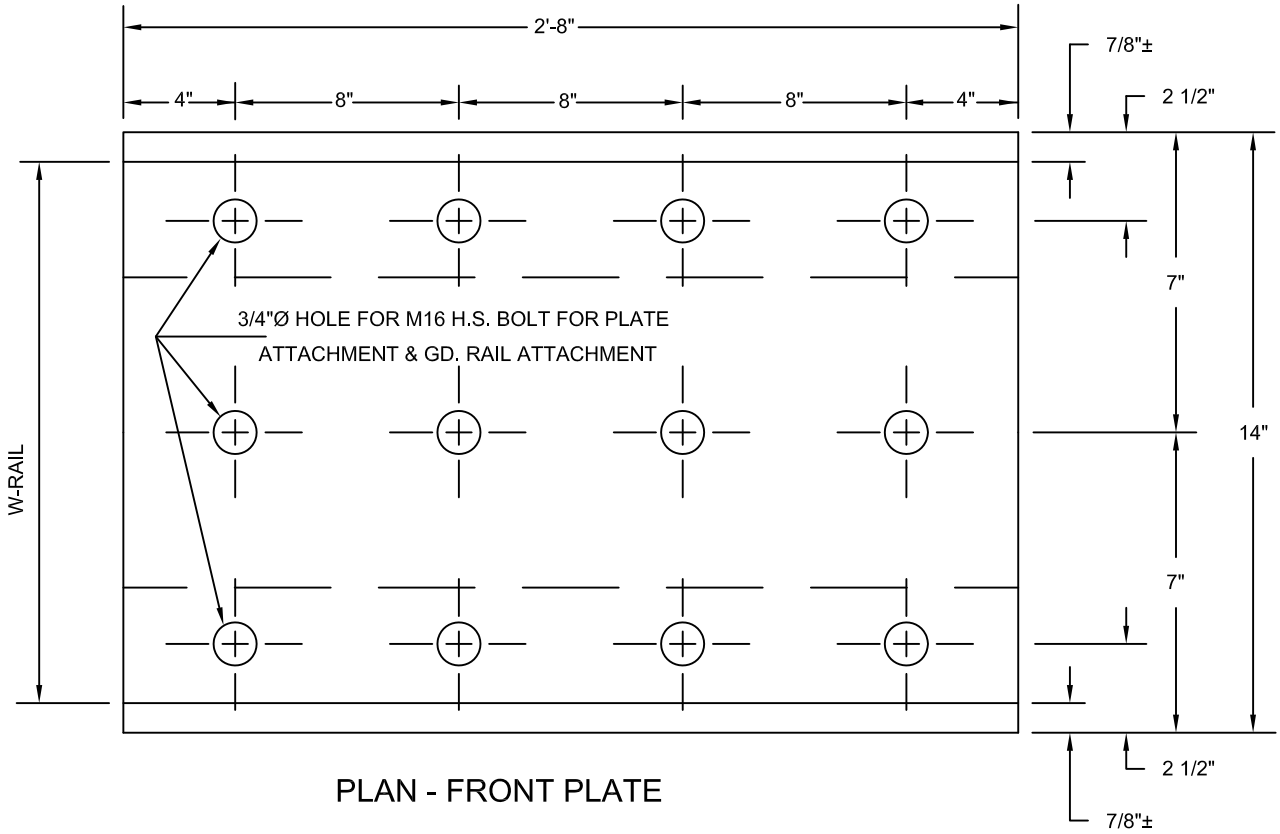

PLAN - FRONT PLATE

* IF BOLT IS THRU EXISTING HWY. GD. RECESS THAT IS FILLED WITH CONCRETE ADD THE DEPTH OF THE RECESS TO THE 4" LENGTH OF INSERT AND SIMILARLY TO 3/4" Ø BOLT.

massDOT Massachusetts Department of Transportation Highway Division

CONSTRUCTION STANDARDS

MASONRY BRACKET FOR STEEL W BEAM HIGHWAY GUARD ON ABUTMENTS AND END POSTS (TRAILING END)

DATE OF ISSUE MARCH 2012

DRAWING NUMBER **E 402.5.0**

massDOT
Massachusetts Department of Transportation
Highway Division

CONSTRUCTION STANDARDS

STEEL THRIE BEAM HIGHWAY GUARD TERMINAL CONNECTORS ON AN EXIST. BRIDGE LEADING END AT ABUTMENT & END POST

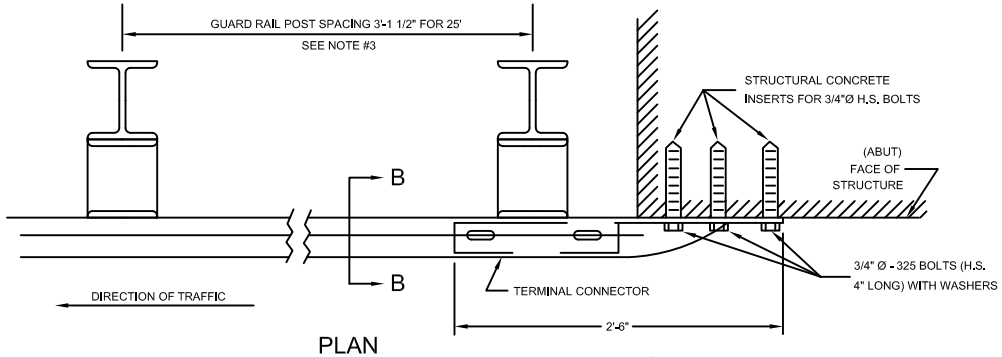

PLAN

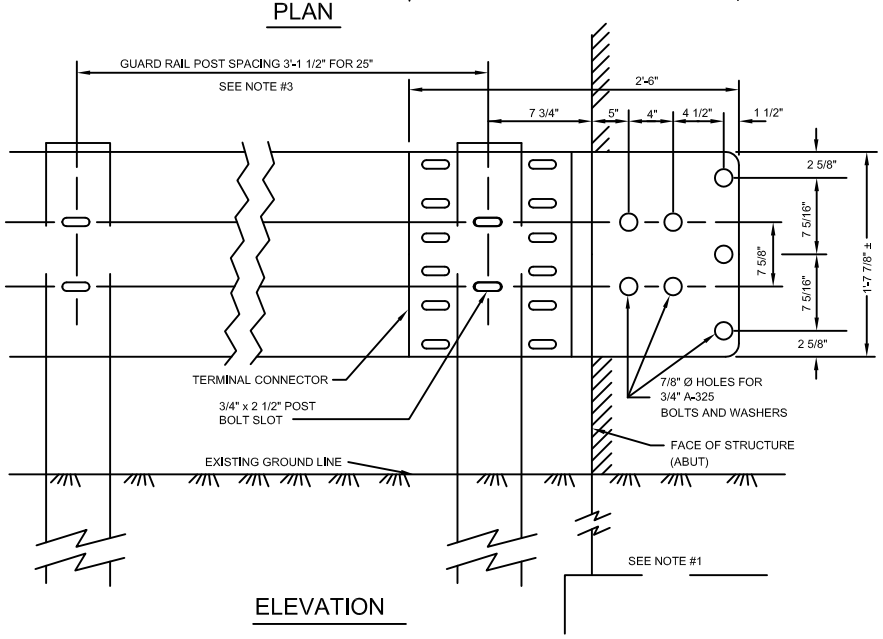

ELEVATION

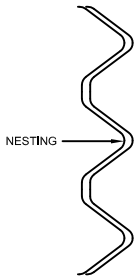

SECTION B-B
(2 RAILS)

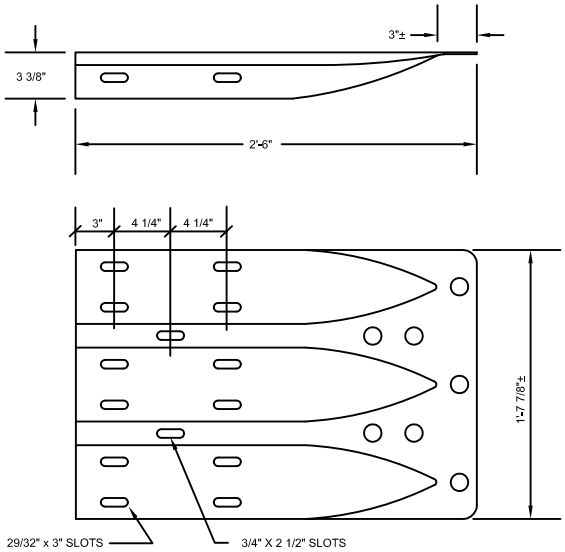

TERMINAL CONNECTOR

NOTES:

1. WHEN THE HIGHWAY GUARD POST FALLS ON THE FOOTING OF THE STRUCTURE AND THE DISTANCE FROM THE SURFACE TO THE TOP OF THE FOOTING IS LESS THAN 3'-3" THE POST SHALL BE CUT AND SET ON THE FOOTING IN A CEMENT CONCRETE ENVELOPE AS SHOWN IN DETAIL "A" DRAWINGS E 402.2.0 AND E 401.12.0
2. CONSTRUCTION DETAILS SHOWN ALSO APPLY TO WOOD AND CHARLEY (C) POST INSTALLATIONS.
3. THE DOUBLE RAIL ELEMENT IS TO CONSIST OF NESTING TWO (2) 12 GAUGE RAIL ELEMENTS FOR A DISTANCE OF 25 FEET, THE SHORT RAIL (25') IS TO BE NESTED BEHIND THE CONTINUOUS RAIL, SEE SECTION B-B.
4. BACK UP PLATE NOT REQUIRED WHERE RAIL IS TO BE NESTED.

DATE OF ISSUE
MARCH 2012

DRAWING NUMBER
E 402.7.0

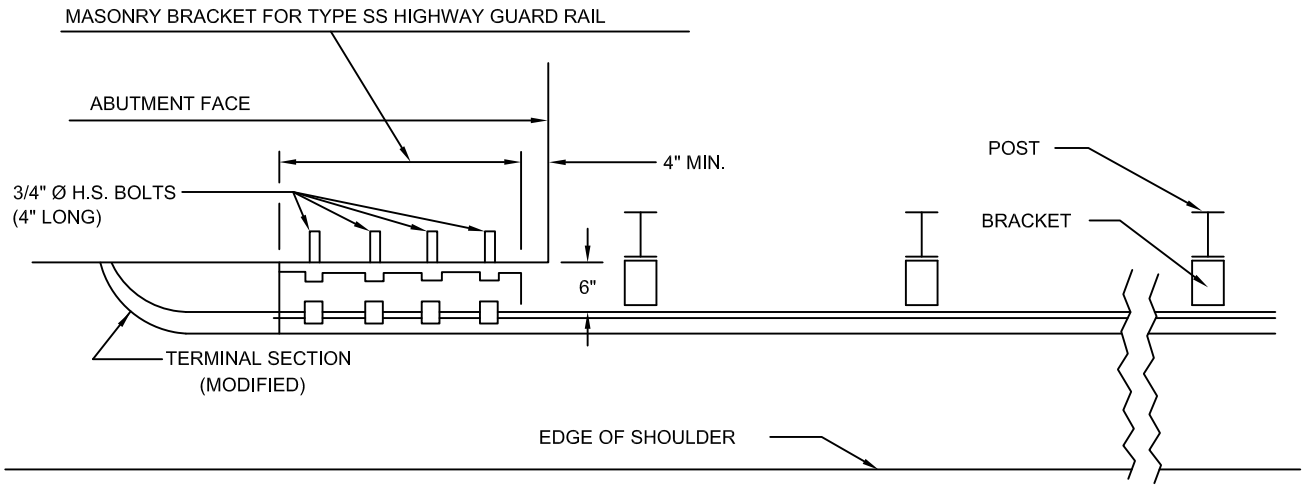

PLAN

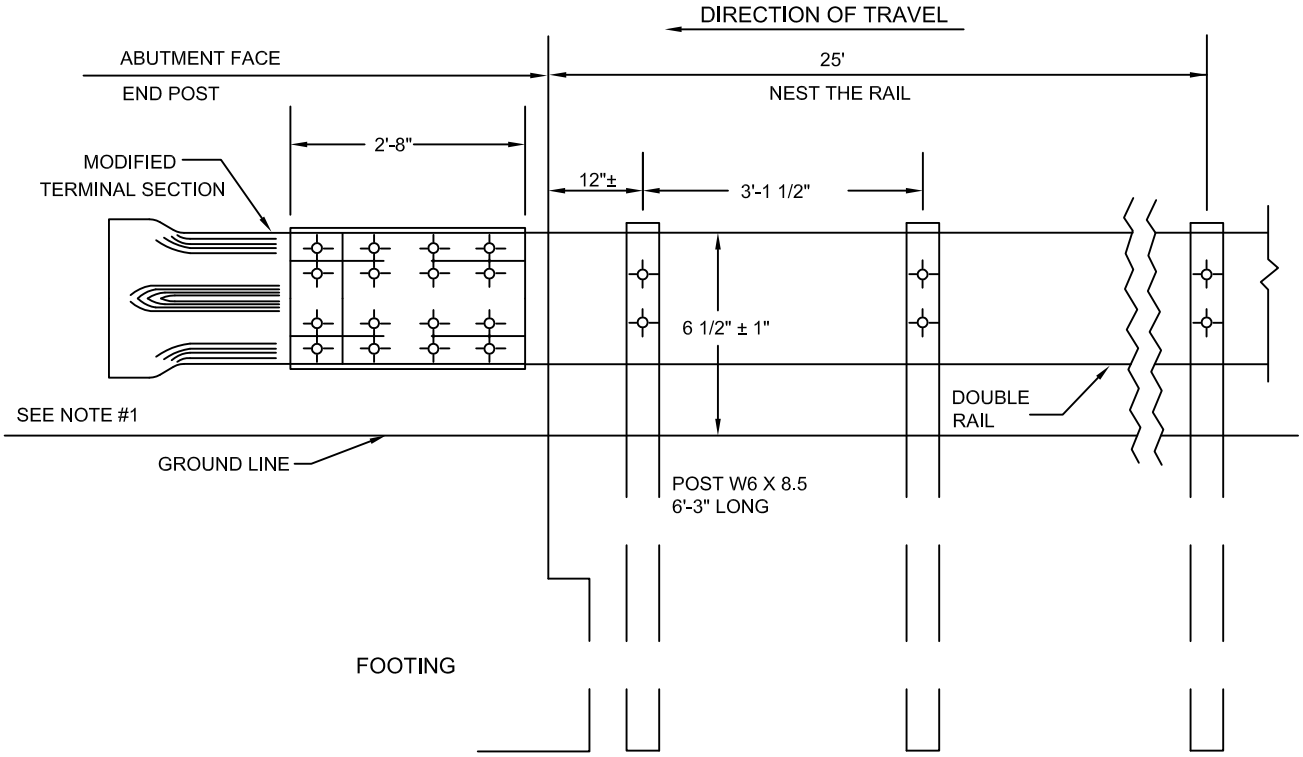

ELEVATION

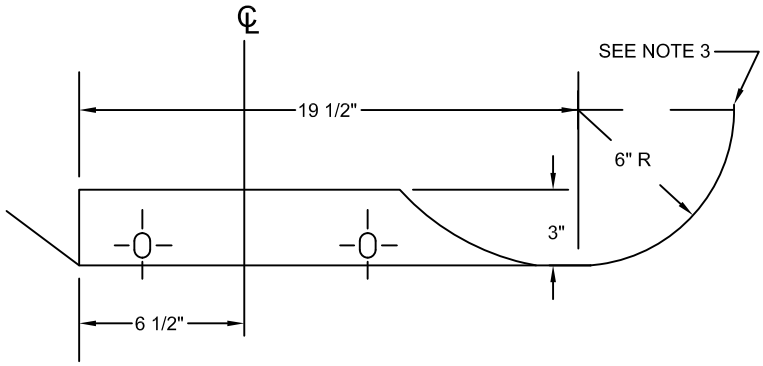

MODIFIED TERMINAL END

NOTES:

1. FOR BRACKET DETAIL SEE DRAWINGS E 402.9.0 AND E 402.10.0
2. FOR NESTING SEE DRAWING E 402.7.0
3. STANDARD TERMINAL END MAY BE CUT AND FINISHED IN ACCORDANCE WITH STANDARD SPECIFICATIONS.
4. BACKUP PLATE NOT REQUIRED WHEN RAILING IS NESTED.
5. GUARD RAIL POST SPACING 3'-1 1/2" FOR 25 FEET.

massDOT Massachusetts Department of Transportation Highway Division

CONSTRUCTION STANDARDS

STEEL THRIE BEAM HIGHWAY GUARD (TRAILING END) AT EXISTING BRIDGE ABUTMENTS AND END POSTS

DATE OF ISSUE
MARCH 2012

DRAWING NUMBER
E 402.8.0

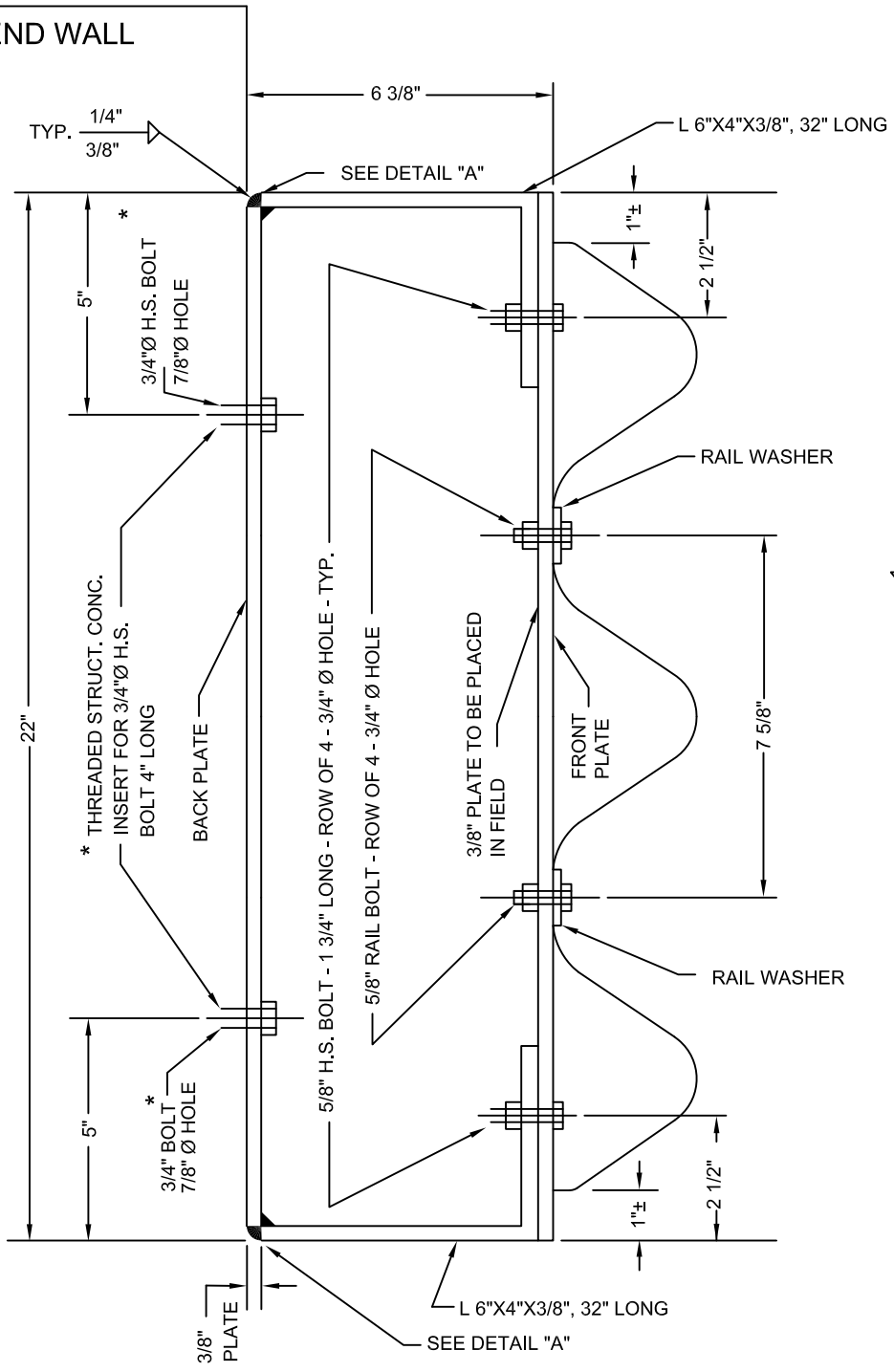

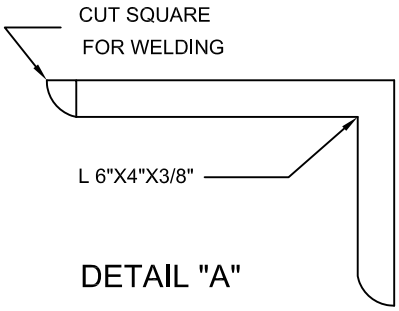

* IF BOLT IS THRU EXISTING HWY. GD. RECESS THAT IS FILLED WITH CONCRETE ADD THE DEPTH OF RECESS TO THE 4" LENGTH OF INSERT SIMILARLY TO 3/4" BOLT.

NOTES:

1. ALL EXISTING HWY. GD. RECESSES TO BE FILLED WITH EPOXY CONCRETE
2. ALL WELDING IS TO BE DONE IN THE SHOP

massDOT Massachusetts Department of Transportation Highway Division CONSTRUCTION STANDARDS	MASONRY BRACKET FOR STEEL THRIE BEAM HIGHWAY GUARD ON ABUTMENTS AND END POSTS (TRAILING END)	DATE OF ISSUE MARCH 2012 DRAWING NUMBER **E 402.9.0**

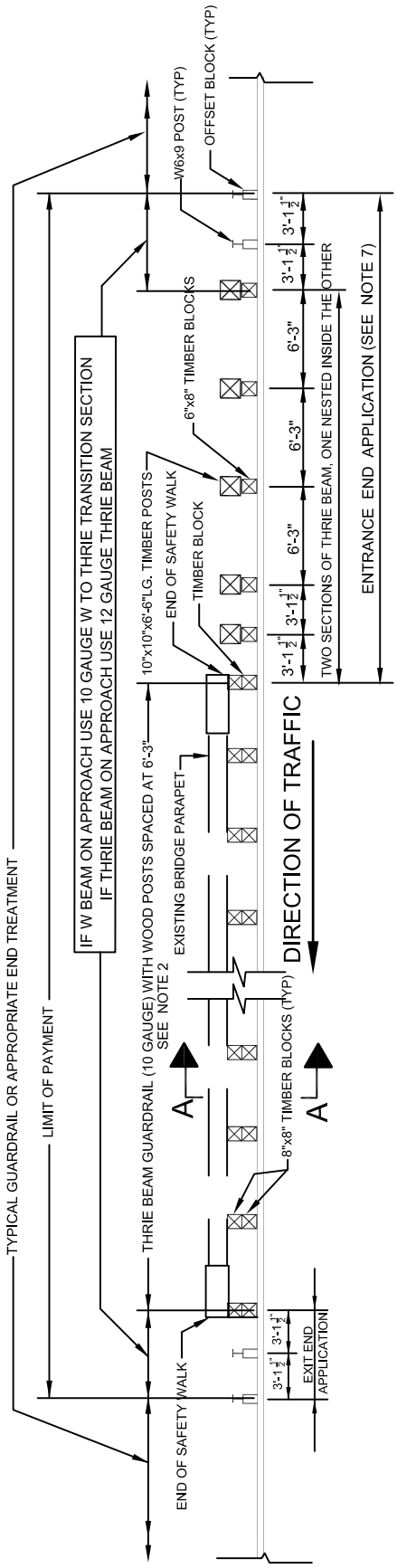

PLAN

NOT TO SCALE

massDOT Massachusetts Department of Transportation Highway Division

CONSTRUCTION STANDARDS

GUARDRAIL RETROFIT ON BRIDGES (PLAN VIEW)

DATE OF ISSUE
MARCH 2012

DRAWING NUMBER
E 402.9.1

massDOT
Massachusetts Department of Transportation
Highway Division

CONSTRUCTION STANDARDS

GUARDRAIL RETROFIT ON BRIDGES (DETAILS)

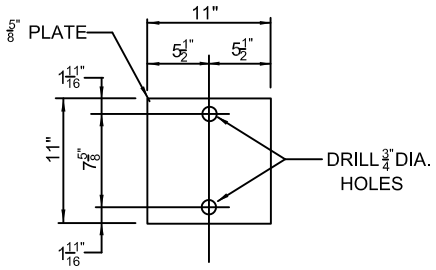

THRIE BEAM BEARING PLATE DETAIL

(TO BE USED ON VERTICAL PARAPET)

NOT TO SCALE

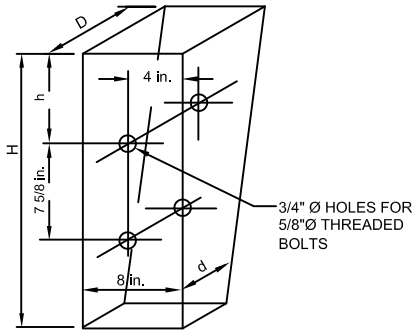

BRIDGE SPACER DETAIL

NOT TO SCALE

DIMENSIONS H, h D AND d WILL VARY FIELD MEASURE PRIOR TO FABRICATION. WOOD OR COMPOSITE TIMBER BLOCKS AND SPACERS SHALL BE USED.

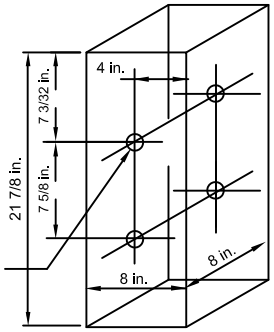

TIMBER BLOCK DETAIL

NOT TO SCALE

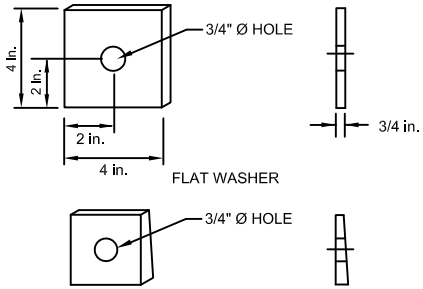

BEVELED WASHER TO FIT A 5/8 IN. Ø BOLT

WASHER DETAILS

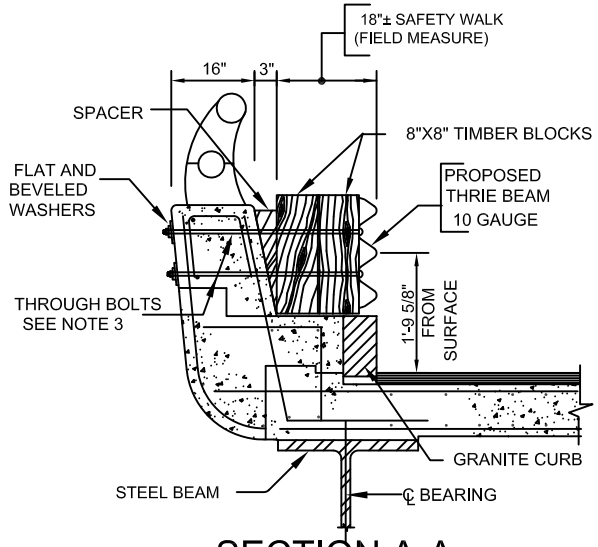

SECTION A-A

THROUGH CONCRETE PARAPET WALL

NOT TO SCALE

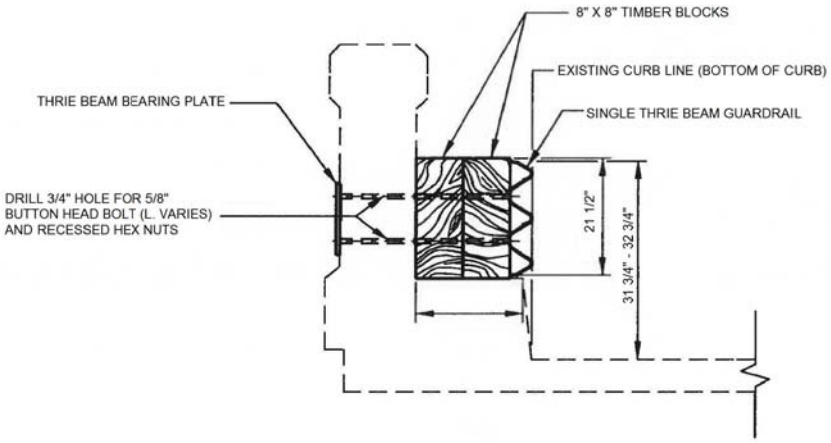

SECTION A-A

DATE OF ISSUE
MARCH 2012

DRAWING NUMBER
E 402.9.2

NOTES:

1. THIS INSTALLATION SHALL BE USED WHEN THE EXISTING SAFETY WALK IS 18" OR LESS.

2. TIMBER BLOCKS AND SPACERS SHALL BE SPACED AT 6'-3" OR LESS ON CENTERS. A MAXIMUM OF TWO NON-STANDARD POST SPACES FROM 6'-3" TO 2'-6" MAY BE USED TO ADJUST THE RAIL INSTALLATION TO MATCH THE BRIDGE LENGTH. PLACE NON-STANDARD POST SPACES ADJACENT TO EACH OTHER WITH ODD PANEL LENGTHS IN THE CENTER OF THE BRIDGE.

3. ATTACH THE PROPOSED THRIE BEAM RETROFIT TO THE EXISTING PARAPET WITH TWO 5/8"Ø ASTM A307 THREADED BOLTS, NUTS, WASHERS, TIMBER BLOCKS AND SPACERS BY DRILLING HOLES THROUGH THE PARAPET. ALL HARDWARE ITEMS SHALL BE GALVANIZED.

4. THE CONTRACTOR SHALL FIELD VERIFY ALL DIMENSIONS, FURNISH AND INSTALL THE RETROFIT GUARDRAIL WITH THE TIMBER BLOCKS, SPACERS AND WASHERS AS REQUIRED TO THE PARAPET IN ACCORDANCE WITH THE TRAFFIC STANDARDS AND ALIGN THE FACE OF THE GUARDRAIL WITH THE FACE OF CURB (1/4"±).

5. "THRIE BEAM EXPANSION SECTIONS" SHALL BE INSTALLED AT EACH BRIDGE EXPANSION JOINT.

6. INSTALL A DEMOUNTABLE REFLECTORIZED DELINEATOR (GUARDRAIL) IN THE UPPER VALLEY OF THE THRIE BEAM AT EACH FIFTH POST.

7. THE EXIT END APPLICATION SHALL ONLY BE USED ON DIVIDED HIGHWAYS. FOR ALL OTHER APPLICATIONS, THE ENTRANCE END APPLICATION SHALL BE USED AT BOTH ENDS OF BRIDGE PARAPET.

8. WITHIN THE LENGTH OF THE APPROACH AND DEPARTURE TRANSITIONS THE GUARDRAIL SHALL EXTEND IN A STRAIGHT LINE FROM THE BRIDGE WITH NO KINKS OR ANGLES VISIBLE. WHERE TAPERING IS NECESSARY TO MATCH THE OFFSET OF THE EXISTING GUARDRAIL IT SHALL BE DONE BEYOND THE APPROACH AND DEPARTURE TRANSITIONS AND HAVE A 15:1 TAPER RATE.

9. WOOD OR COMPOSITE OFFSET BLOCKS SHALL BE INSTALLED WITH NEW AND RESET SECTIONS OF GUARD RAIL.

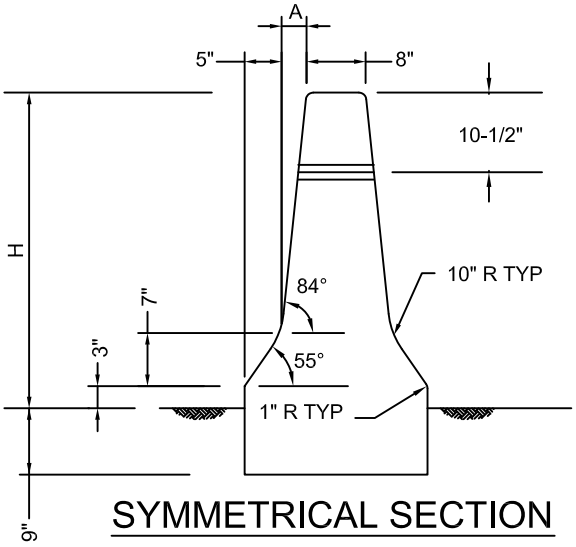

SYMMETRICAL SECTION

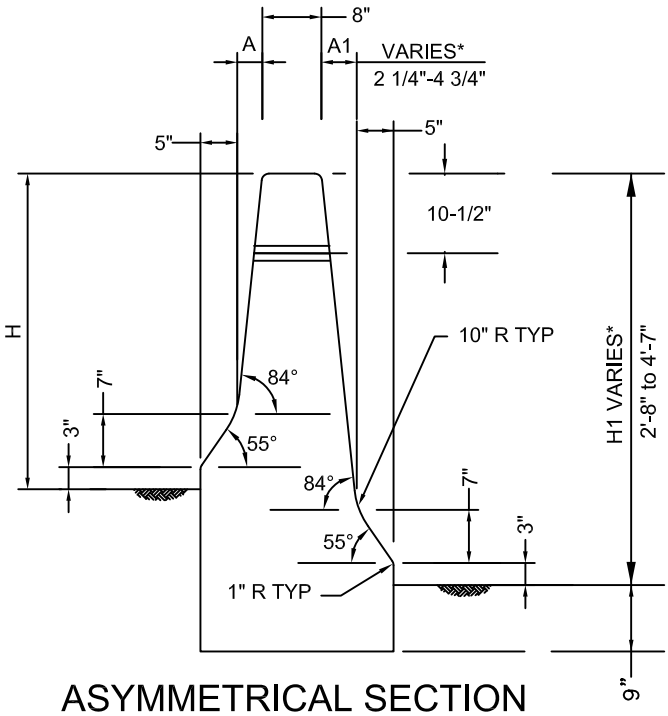

ASYMMETRICAL SECTION

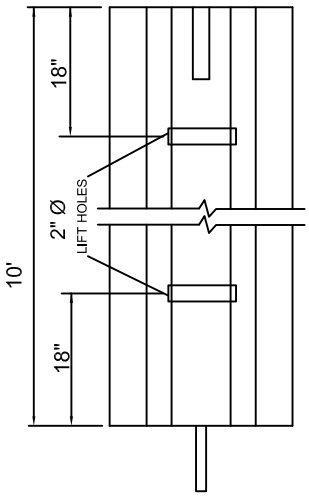

PLAN

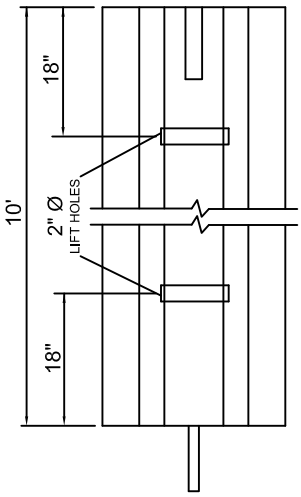

PLAN

SYSTEM	A	H
NORMAL	2 1/4"	2'-8"
TALL	3 1/4"	3'-6"

NOTES:

1. ALL EDGES SHALL BE ROUNDED WITH A 1" RADIUS EXCEPT AS SHOWN
2. FOR DOWEL CONNECTION DETAILS SEE E 402.13.0.
3. FOR REINFORCING SEE E 402.11.0 FOR SYMMETRICAL SHAPE AND E 401.12.0 FOR ASYMMETRICAL SHAPE.
4. ALL CONCRETE IS TO BE FIELD COATED AFTER FINAL INSTALLATION WITH A CONCRETE PENETRANT/SEALER. CAST IN PLACE CONCRETE SHALL CURE NOT LESS THAN 28 DAYS PRIOR TO COATING.
5. LIFT HOLES USED ONLY ON PRECAST BARRIERS 13' AND LESS.

* VARY "A1" RELATIVE TO "H1" WHILE MAINTAINING 55° AND 84° BARRIER ANGLES. A1=4-3/4" MAX., H1=4'-7" MAX.

massDOT Massachusetts Department of Transportation Highway Division
CONSTRUCTION STANDARDS

F SHAPE
CONCRETE BARRIER

DATE OF ISSUE
MARCH 2012

DRAWING NUMBER
E 402.10.0

massDOT
Massachusetts Department of Transportation
Highway Division

CONSTRUCTION STANDARDS

F SHAPE CONCRETE BARRIER
SYMMETRICAL SECTION
REINFORCING DETAILS

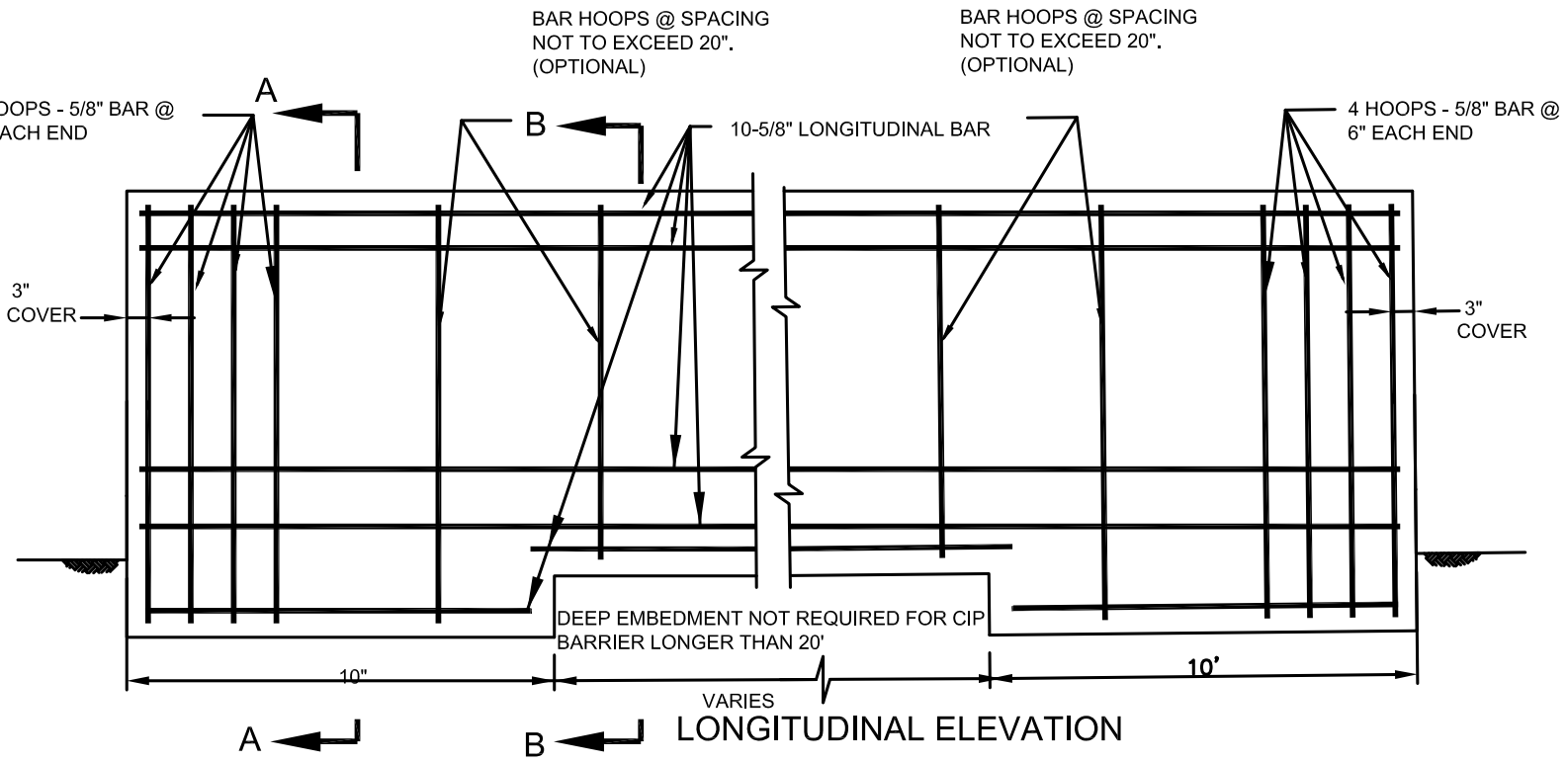

LONGITUDINAL ELEVATION

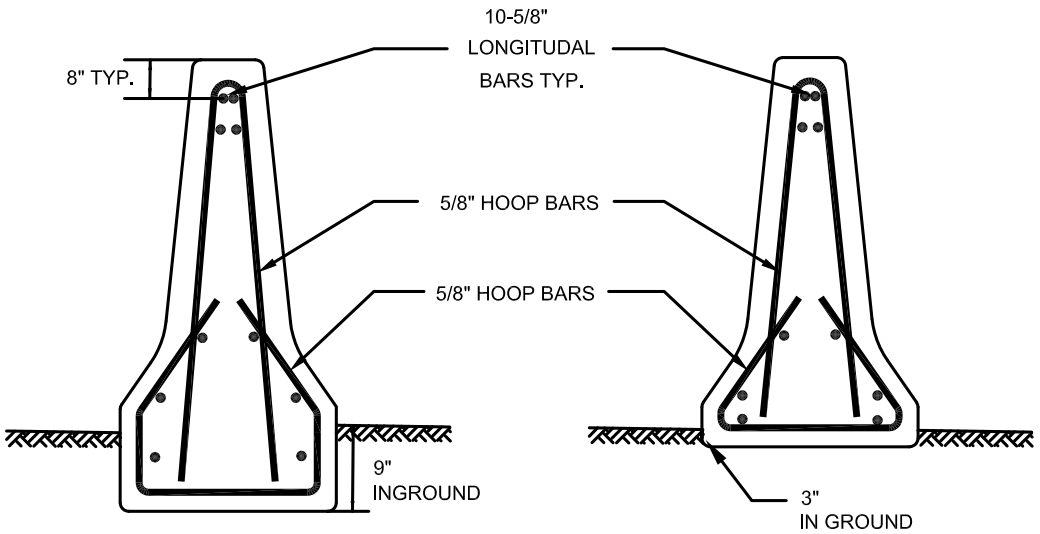

SECTION A-A

SECTION B-B

NOTES:

1. CAST IN PLACE NOT TO EXCEED 200' BETWEEN EXPANSION JOINTS.
2. CONSTRUCTION JOINTS REQUIRED AT 40' INTERVALS (1/2 " PREMOULDED JOINT FILLER REQUIRED FOR PRECAST BARRIERS).
3. USE MINIMUM COVER OF 1 1/2", UNLESS OTHERWISE INDICATED.
4. MATERIAL IS 4000 psi-3/4"-610 lb/Cu.Yd. CONCRETE.
5. ALL STEEL REINFORCING TO BE GALVANIZED OR EPOXY COATED, AASHTO-M31, GRADE 60.
6. ALL LONGITUDINAL BARS ARE TO BE CONTINUOUS FOR BOTH PRECAST AND CAST IN PLACE BARRIERS.
7. FOR DIMENSIONS SEE E 402.10.0

DATE OF ISSUE
MARCH 2012

DRAWING NUMBER
E 402.11.0

massDOT
Massachusetts Department of Transportation
Highway Division

CONSTRUCTION STANDARDS

F SHAPE CONCRETE BARRIER
ASYMMETRICAL SECTION
REINFORCING DETAILS

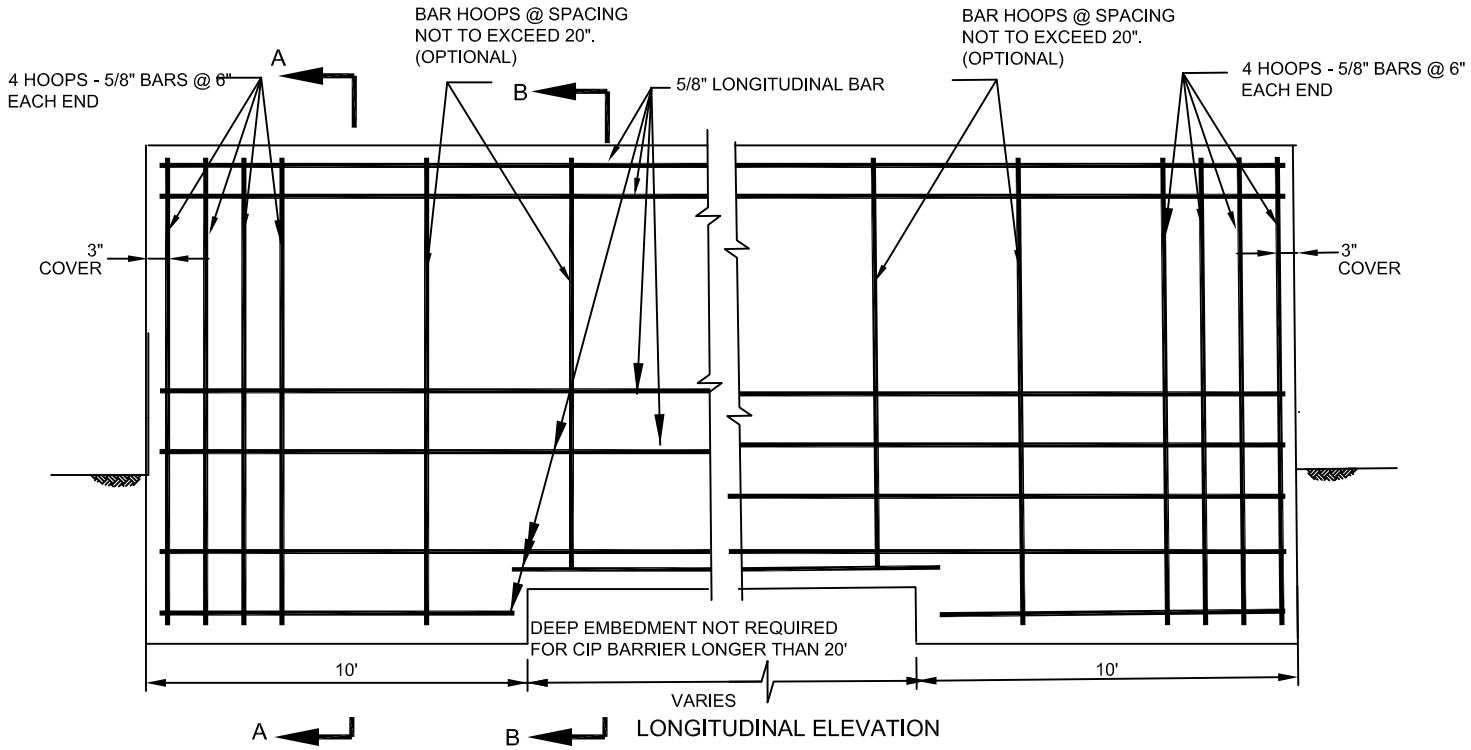

LONGITUDINAL ELEVATION

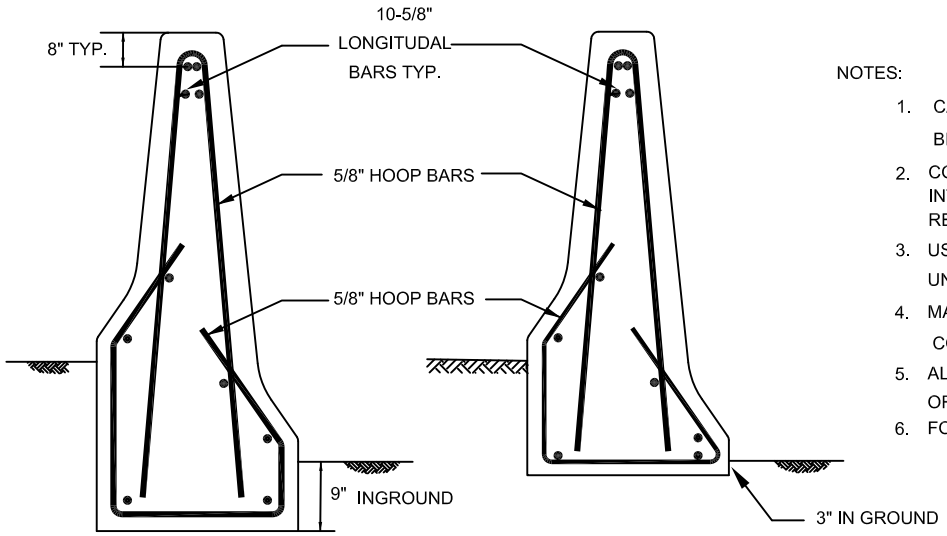

SECTION A-A

SECTION B-B

NOTES:

1. CAST IN PLACE NOT TO EXCEED 200' BETWEEN EXPANSION JOINTS.
2. CONSTRUCTION JOINTS REQUIRED AT 40' INTERVALS (1/2 " PREMOULDED JOINT FILLER REQUIRED FOR PRECAST BARRIERS).
3. USE MINIMUM COVER OF 1 1/2", UNLESS OTHERWISE INDICATED.
4. MATERIAL IS 4000 psi-3/4"-610 lb/Cu.Yd. CONCRETE.
5. ALL STEEL REINFORCING TO BE GALVANIZED OR EPOXY COATED, AASHTO-M31, GRADE 60.
6. FOR DIMENSIONS SEE E 402.10.0

DATE OF ISSUE
MARCH 2012

DRAWING NUMBER
E 402.12.0

massDOT
Massachusetts Department of Transportation
Highway Division

CONSTRUCTION STANDARDS

F SHAPE CONCRETE BARRIER DOWEL DETAILS

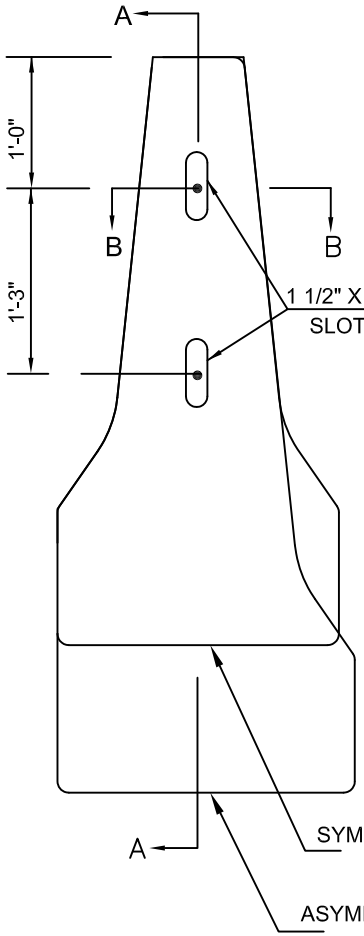

ELEVATION

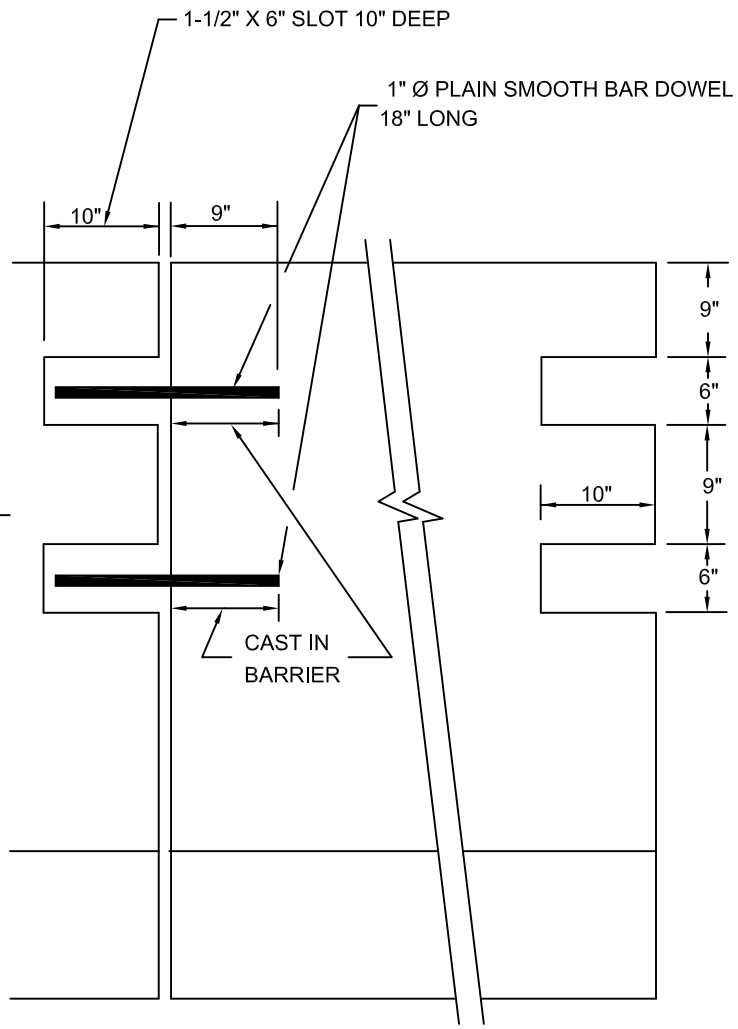

SECTION A-A

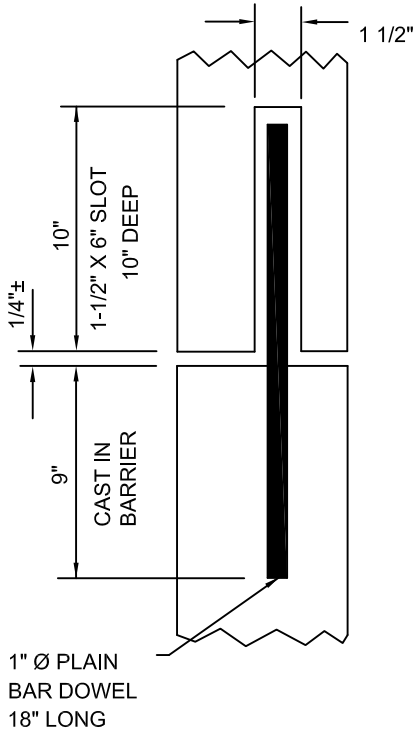

SECTION B-B

NOTES:

1. DOWELS TO BE GALVANIZED, AASHTO-M31, GRADE 60.
2. FOR ADDITIONAL DETAILS SEE E 402.10.0

DATE OF ISSUE
MARCH 2012

DRAWING NUMBER
E 402.13.0

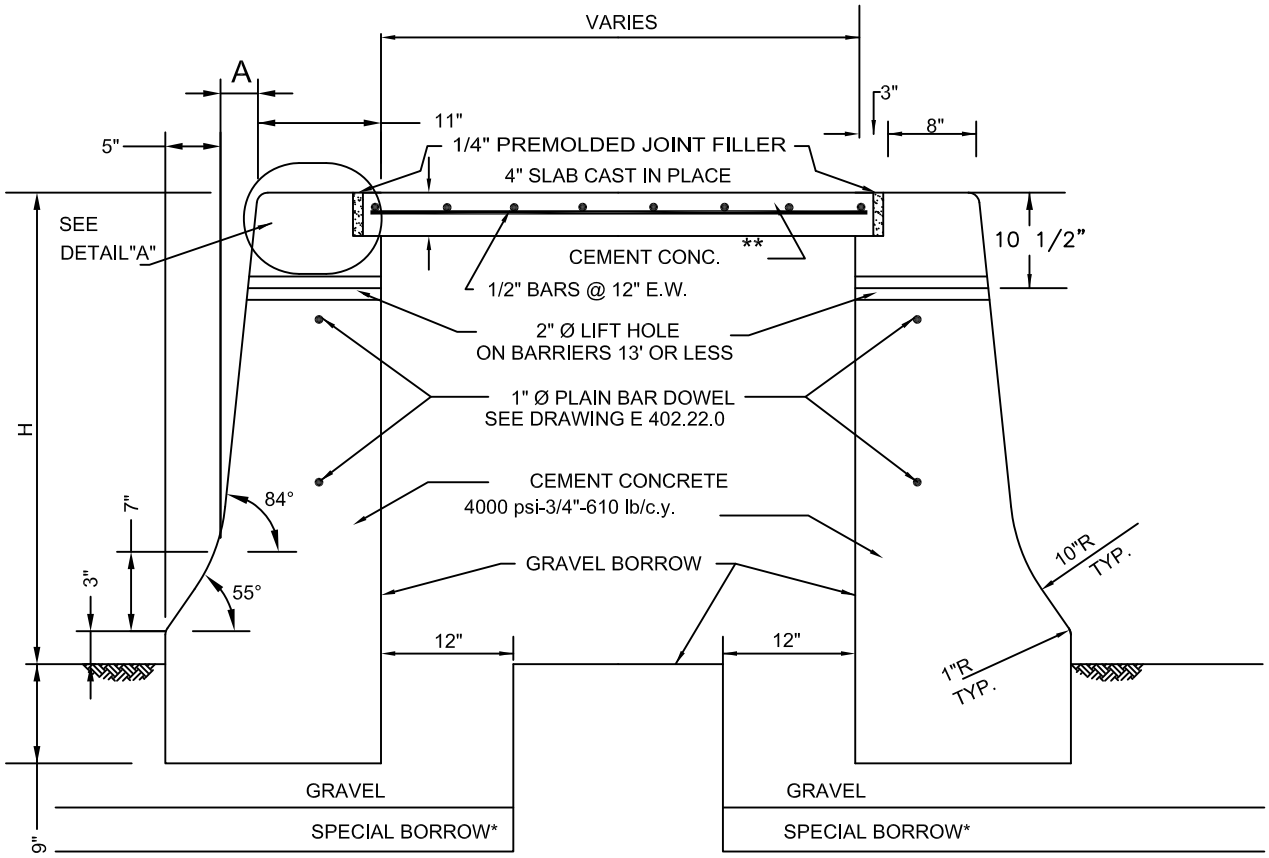

SYSTEM	A	H
NORMAL	2-3/8"	2'-8"
TALL	3-11/32"	3'-6 1/8"

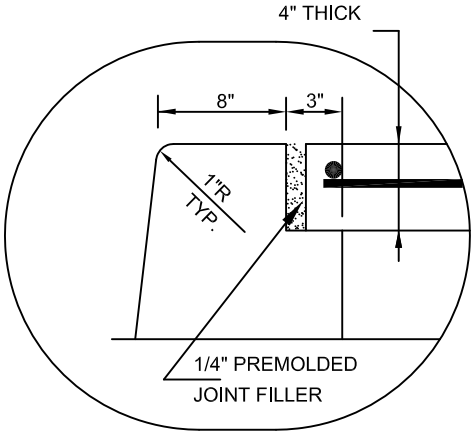

DETAIL "A"

* SAME DEPTH AS UNDER ROADWAY.

** BARRIER CAP BUILT USING 4000 psi-3/4"-610 lb/c.y. CEMENT CONCRETE.

NOTES:

1. ALL LONGITUDINAL BARS TO BE CONTINUOUS FOR BOTH PRECAST BARRIERS AND CAST IN PLACE BARRIERS.
2. USE MINIMUM COVER OF 1 1/2", UNLESS OTHERWISE INDICATED.
3. ALL CONCRETE IS TO BE FIELD COATED AFTER FINAL INSTALLATION WITH A CONCRETE PENETRANT/SEALER. CONCRETE SHALL CURE NOT LESS THAN 28 DAYS PRIOR TO COATING.
4. FOR REINFORCING DETAILS SEE E 402.21.0
5. FOR DOWEL DETAILS SEE E 402.22.0
6. TAR PAPER TO BE PLACED INSIDE LIFT HOLES AND BARRIER JOINTS.

massDOT Massachusetts Department of Transportation Highway Division

CONSTRUCTION STANDARDS

F SHAPE CONCRETE BARRIER WITH CONCRETE SEPARATOR

DATE OF ISSUE
MARCH 2012

DRAWING NUMBER
E 402.20.0

massDOT
Massachusetts Department of Transportation
Highway Division

CONSTRUCTION STANDARDS

F SHAPE CONCRETE BARRIER WITH CONCRETE SEPARATOR REINFORCING DETAILS

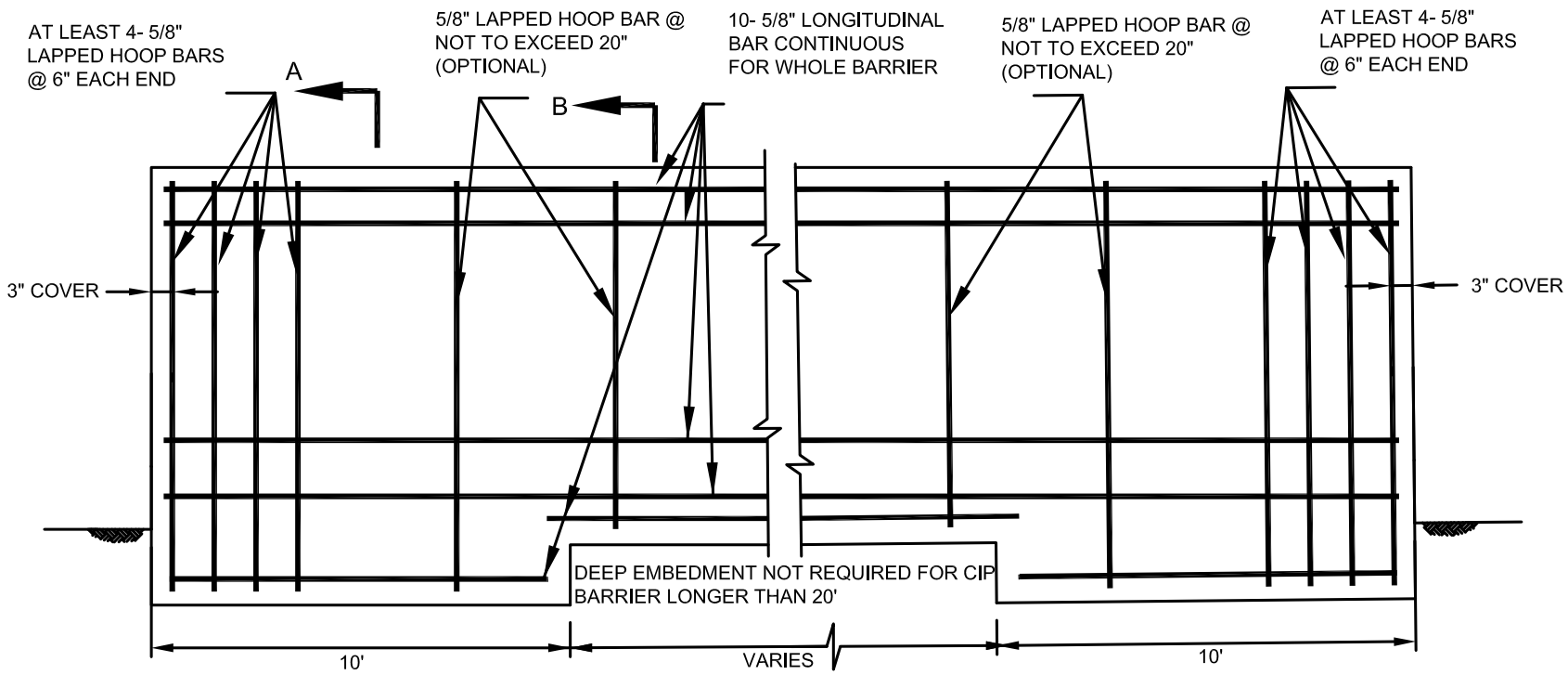

LONGITUDINAL ELEVATION

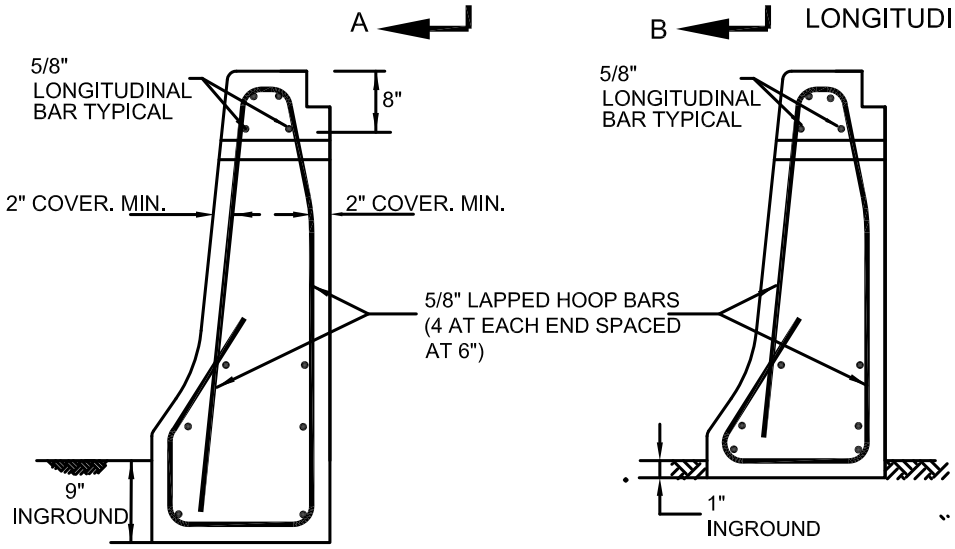

SECTION A-A

SECTION B-B

NOTES:

1. ALL LONGITUDINAL BARS ARE TO BE CONTINUOUS FOR BOTH PRECAST BARRIERS AND CAST IN PLACE BARRIERS.
2. USE MINIMUM COVER OF 1 1/2", UNLESS OTHERWISE INDICATED.
3. CAST IN PLACE (CIP) NOT TO EXCEED 200 FT BETWEEN EXPANSION JOINTS.
4. CONTRACTION JOINTS REQUIRED AT 40' INTERVALS (1/2 " PREMOULDED JOINT FILLER REQUIRED FOR PRECAST BARRIERS).
5. ALL STEEL REINFORCING TO BE GALVANIZED OR EPOXY COATED, AASHTO-M31, GRADE 60.
6. FOR DIMENSIONS SEE E 401.20.0

DATE OF ISSUE
MARCH 2012

DRAWING NUMBER
E 402.21.0

massDOT
Massachusetts Department of Transportation
Highway Division

CONSTRUCTION STANDARDS

F SHAPE CONCRETE BARRIER WITH CONCRETE SEPARATOR DOWEL DETAILS

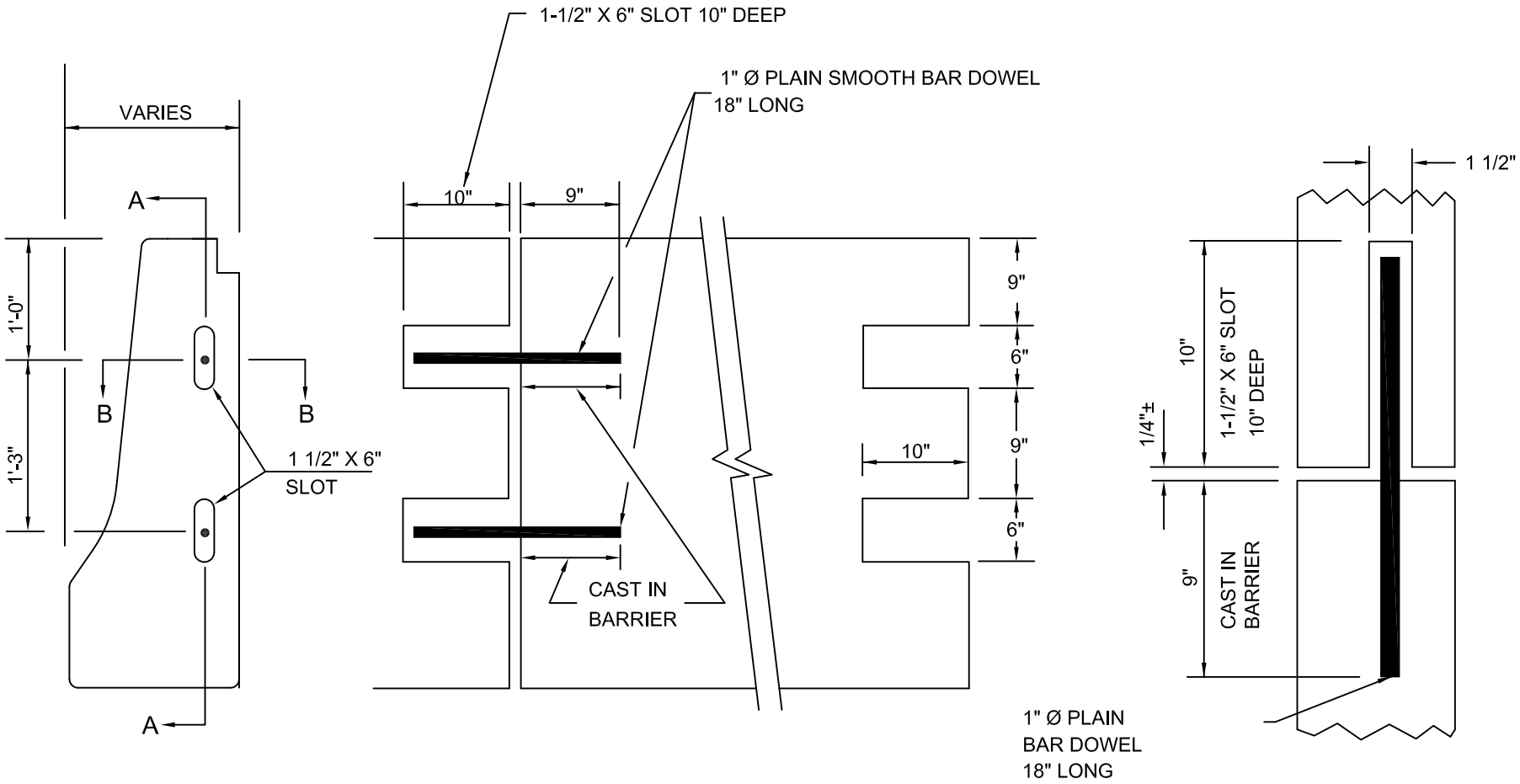

ELEVATION SECTION A-A SECTION B-B

NOTES:

1. DOWELS TO BE GALVANIZED, AASHTO M-31, GRADE 60.
2. FOR ADDITIONAL DETAILS SEE E 402.20.0

DATE OF ISSUE
MARCH 2012

DRAWING NUMBER
E 402.22.0

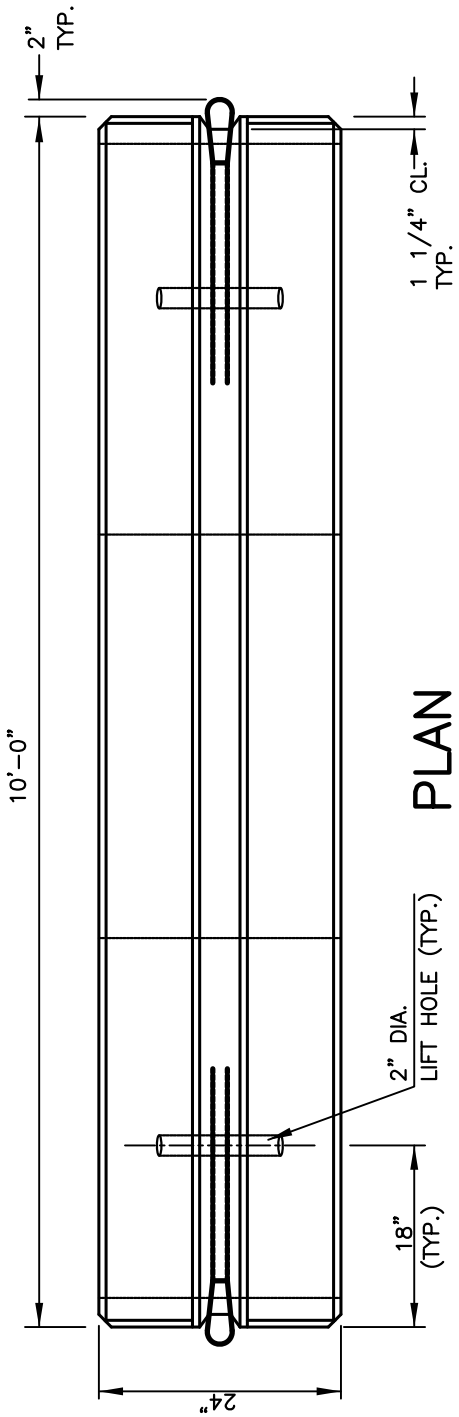

PLAN

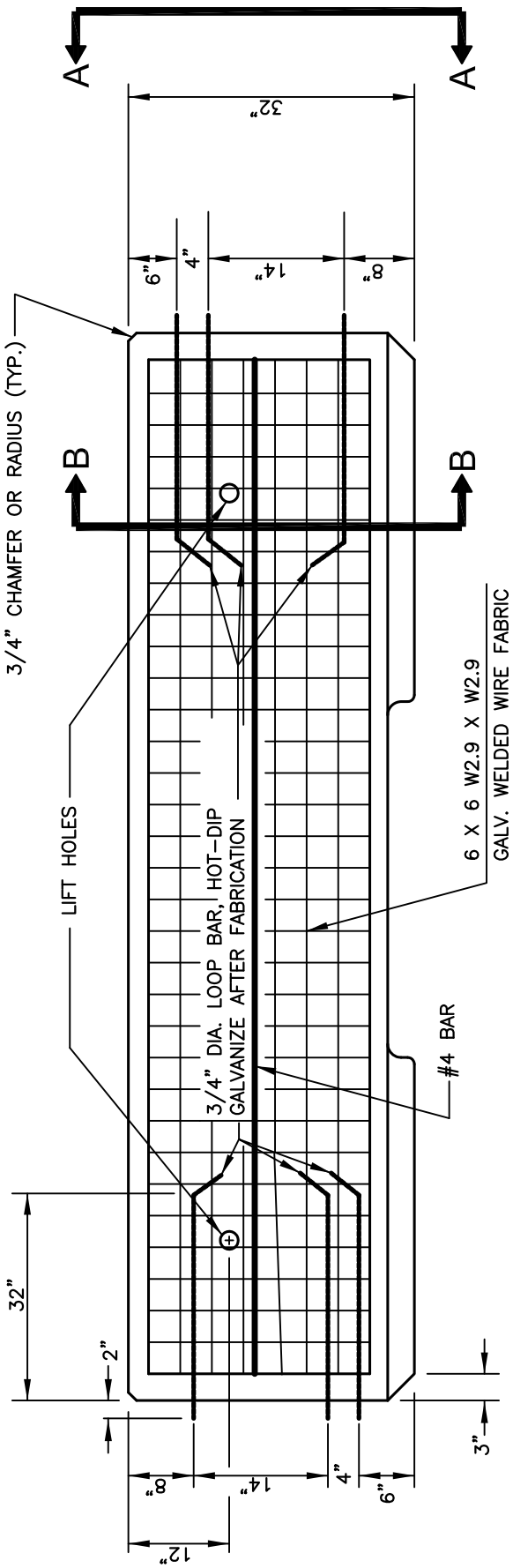

ELEVATION

massDOT Massachusetts Department of Transportation Highway Division

CONSTRUCTION STANDARDS

PRECAST PORTABLE CONCRETE BARRIER

1/3

DATE OF ISSUE
MARCH 2012

DRAWING NUMBER
E 403.1.0

massDOT
Massachusetts Department of Transportation
Highway Division

CONSTRUCTION STANDARDS

PRECAST PORTABLE CONCRETE BARRIER

2/3

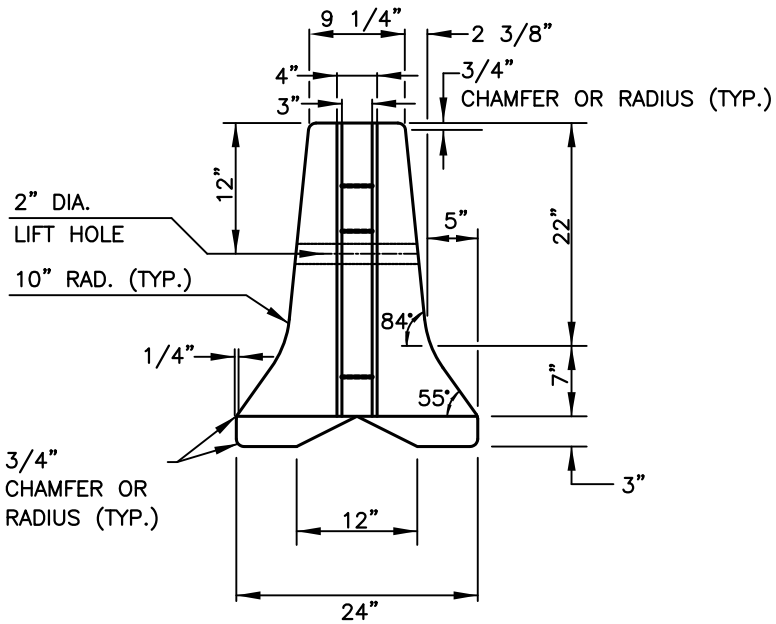

END VIEW A–A

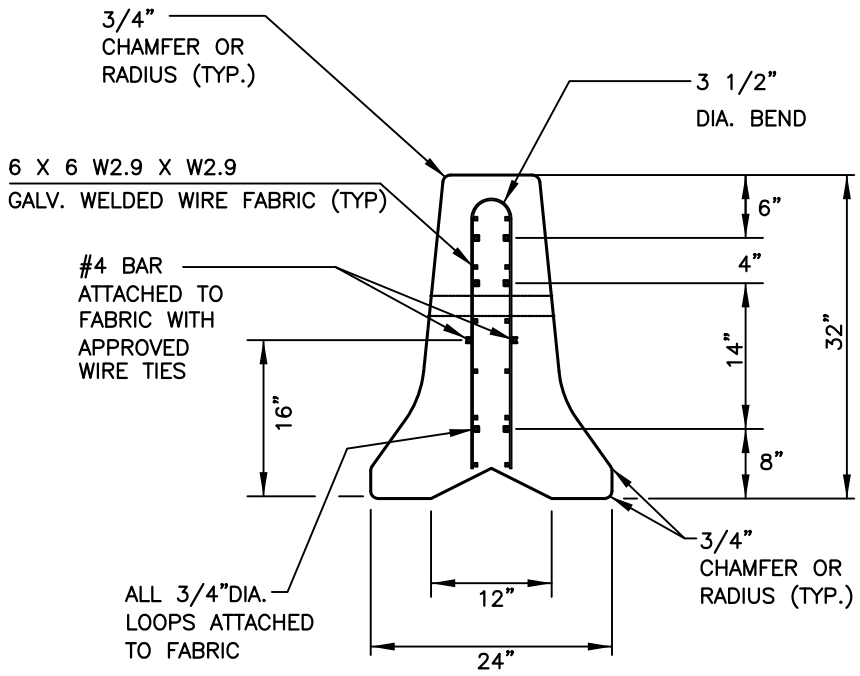

SECTION B–B

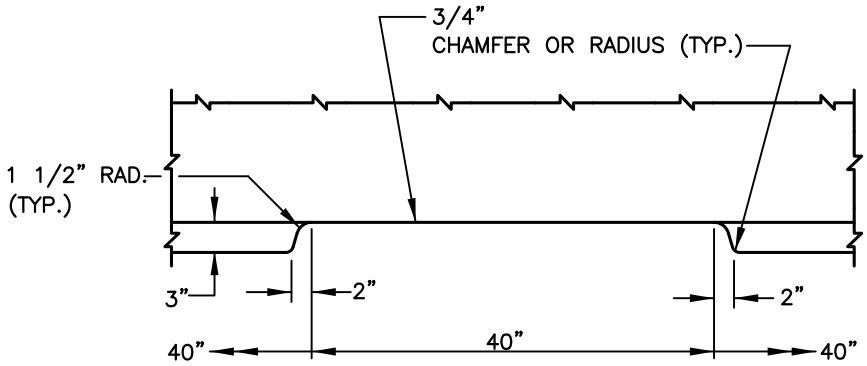

ELEVATION DETAIL OF DRAINAGE SLOT

GENERAL NOTES

1. ALL WELDED WIRE FABRIC, BARS, HOOP BARS AND PIN ASSEMBLIES ARE TO BE HOT–DIP GALVANIZED AFTER FABRICATION

2. HOT–DIP GALVANIZED TREATMENTS ARE TO CONFORM TO MASSACHUSETTS HIGHWAY STANDARD SPECIFICATIONS M7.10.0 AND AASHTO M111.

3. CEMENT CONCRETE IS TO CONFORM TO MASSACHUSETTS HIGHWAY STANDARD SPECIFICATIONS M4.02.00.
CEMENT CONCRETE IS TO BE 5000 PSI, 3/4" CONCRETE.

DATE OF ISSUE
MARCH 2012

DRAWING NUMBER
E 403.2.0

massDOT
Massachusetts Department of Transportation
Highway Division

CONSTRUCTION STANDARDS

PRECAST PORTABLE CONCRETE BARRIER

3/3

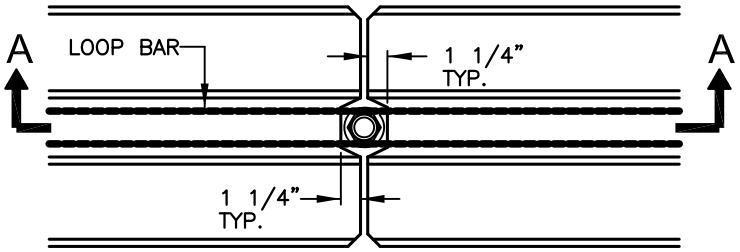

PLAN OF CONNECTION

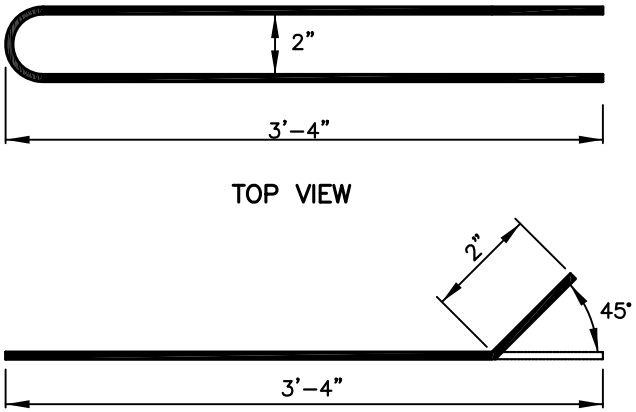

SIDE VIEW
LOOP BAR
3/4" DIA. A36

REINFORCEMENT DETAIL

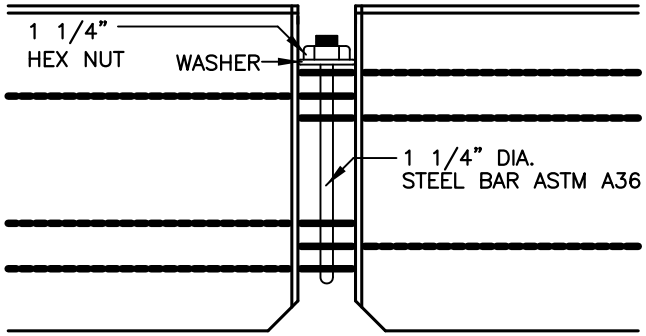

SECTION A–A

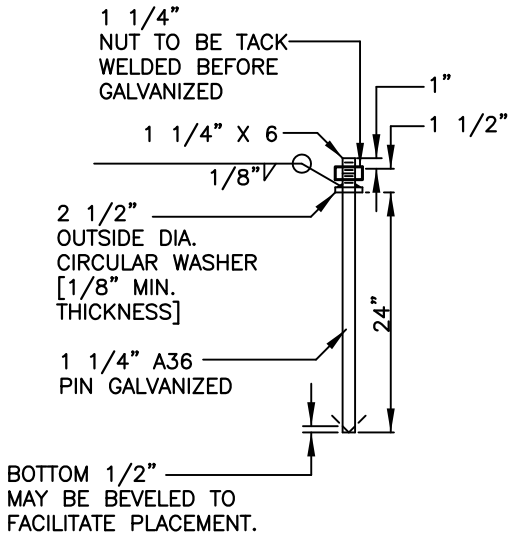

CONNECTOR PIN ASSEMBLY

DATE OF ISSUE
MARCH 2012

DRAWING NUMBER
E 403.3.0

massDOT
Massachusetts Department of Transportation
Highway Division

CONSTRUCTION STANDARDS

CHAIN LINK FENCE (SPRING TENSION WIRE)

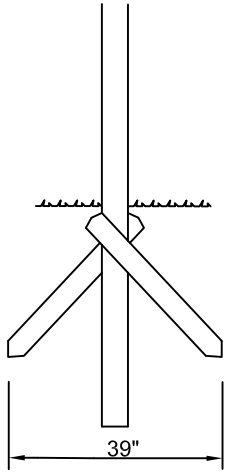

FABRIC PLACED PERPENDICULAR TO THE ANCHOR

DETAIL SHOWING LINE POST SET WITH DRIVE ANCHORS

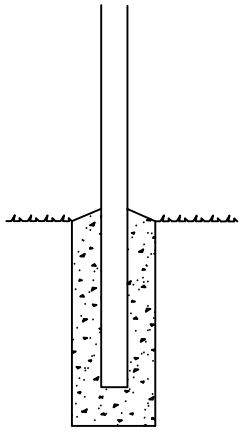

DETAIL SHOWING LINE POST SET IN CONCRETE FOOTING FOR DIMENSIONS SEE 404.5.0

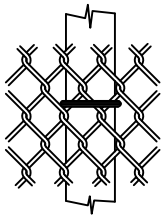

FASTENING FABRIC TO LINE POST EVERY 12" ±

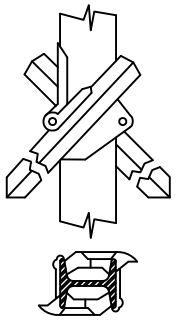

DETAIL OF AN ANCHOR CLAMP

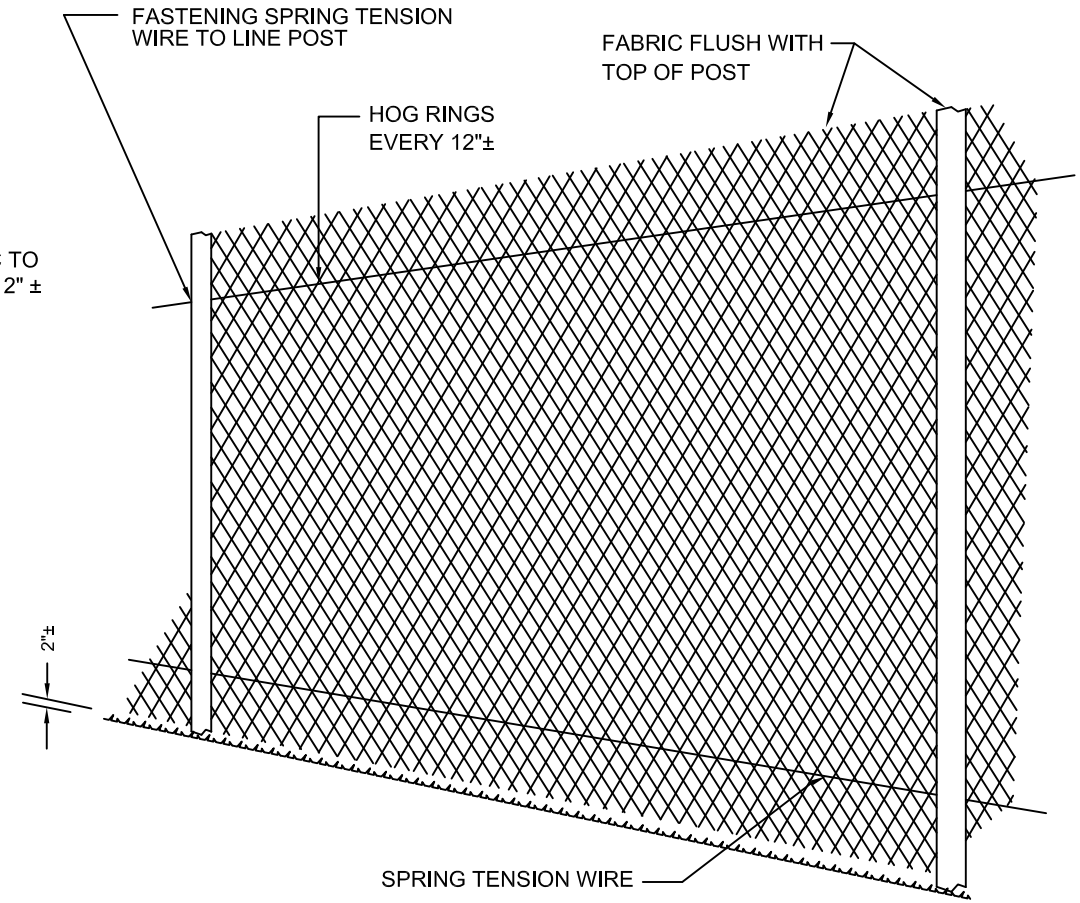

CHAIN LINK FENCE WITH SPRING TENSION WIRE

LINE POSTS TO BE SPACED 10'-0" C. TO C. MAXIMUM EXCEPT ON CURVES WHERE THEY SHALL BE SPACED AS FOLLOWS:

CURVES 200' TO 500' RADIUS	8'-0" C. TO C. MAXIMUM
CURVES 100' TO 200' RADIUS	6'-0" C. TO C. MAXIMUM
CURVES LESS THAN 100' RADIUS	5'-0" C. TO C. MAXIMUM

LINE POST SPACING

DATE OF ISSUE
MARCH 2012

DRAWING NUMBER
E 404.1.0

massDOT
Massachusetts Department of Transportation
Highway Division

CONSTRUCTION STANDARDS

CHAIN LINK FENCE (SPRING TENSION WIRE)

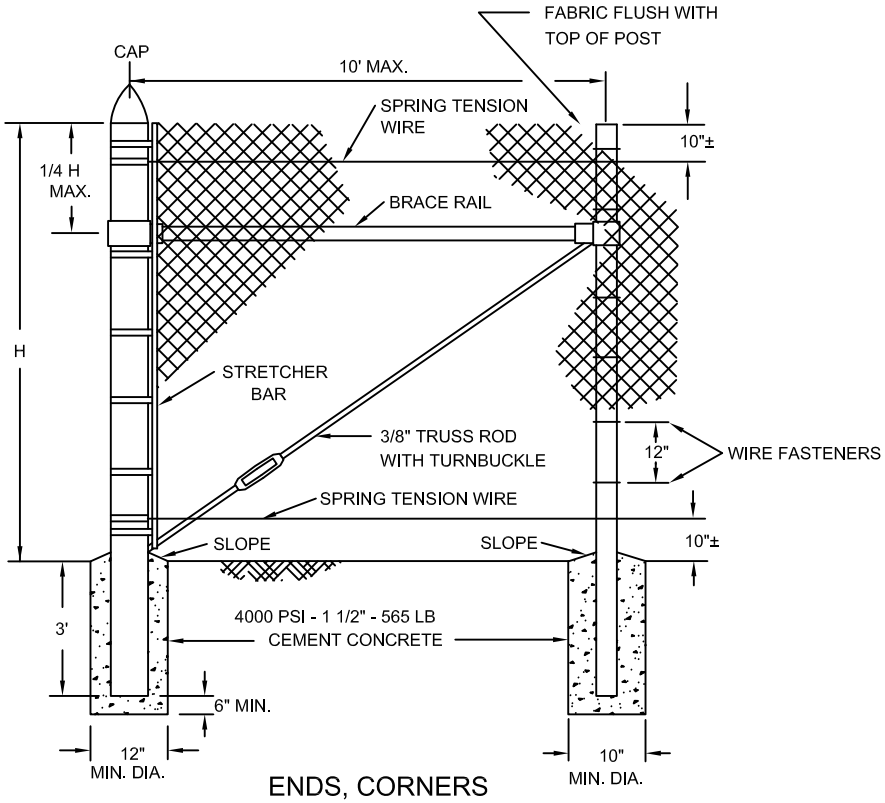

ENDS, CORNERS

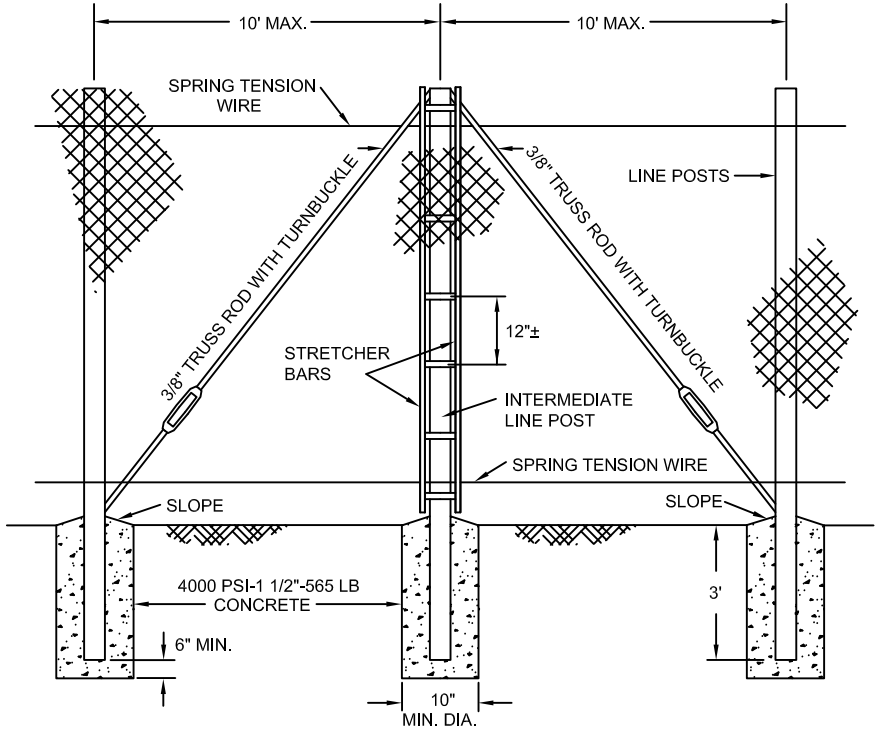

INTERMEDIATE POST

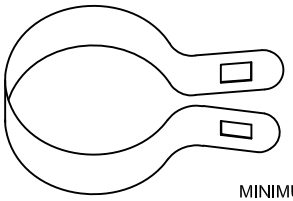

END BAND

SPRING TENSION WIRE
MINIMUM OF (5) TURNS AROUND THE SPRING TENSION WIRE TO END INSTALLATION.
ALL BANDS SHALL BE ROUND ON ROUND POSTS.

NOTES:

1. FABRIC FOR FENCES 4' OR LESS IN HEIGHT; TOP SELVAGE TO HAVE KNUCKLED FINISH. BOTTOM SELVAGE TO HAVE TWISTED AND BARBED FINISH UNLESS OTHERWISE NOTED. FABRIC FOR FENCES 5' OR OVER IN HEIGHT; BOTH TOP AND BOTTOM SELVAGE TO HAVE TWISTED AND BARBED FINISH UNLESS OTHERWISE NOTED.
2. GRADE OF FENCE TO BE PARALLEL WITH THE GRADE OF SIDEWALKS, CURBING, GROUND OR TOP OF WALL.
3. INTERMEDIATE POST INTERVALS NOT TO EXCEED 500 FEET.
4. SPACING OF LINE POST ON CURVES, SEE DRAWING E 404.1.0
5. FOR DESCRIPTION, MATERIALS AND CONSTRUCTION METHODS, SEE STANDARD SPECIFICATIONS.
6. SPRING TENSION WIRE TO BE FASTENED TO FABRIC WITH 11 GAUGE HOG RINGS AT 1' INTERVALS.
7. SPRING TENSION WIRE TO BE FASTENED TO LINE POSTS WITH CLIPS.
8. LINE POSTS TO BE DRIVEN EXCEPT WHERE NOTED ABOVE.

DATE OF ISSUE
MARCH 2012

DRAWING NUMBER
E 404.2.0

massDOT
Massachusetts Department of Transportation
Highway Division

CONSTRUCTION STANDARDS

CHAIN LINK FENCE (PIPE TOP RAIL)

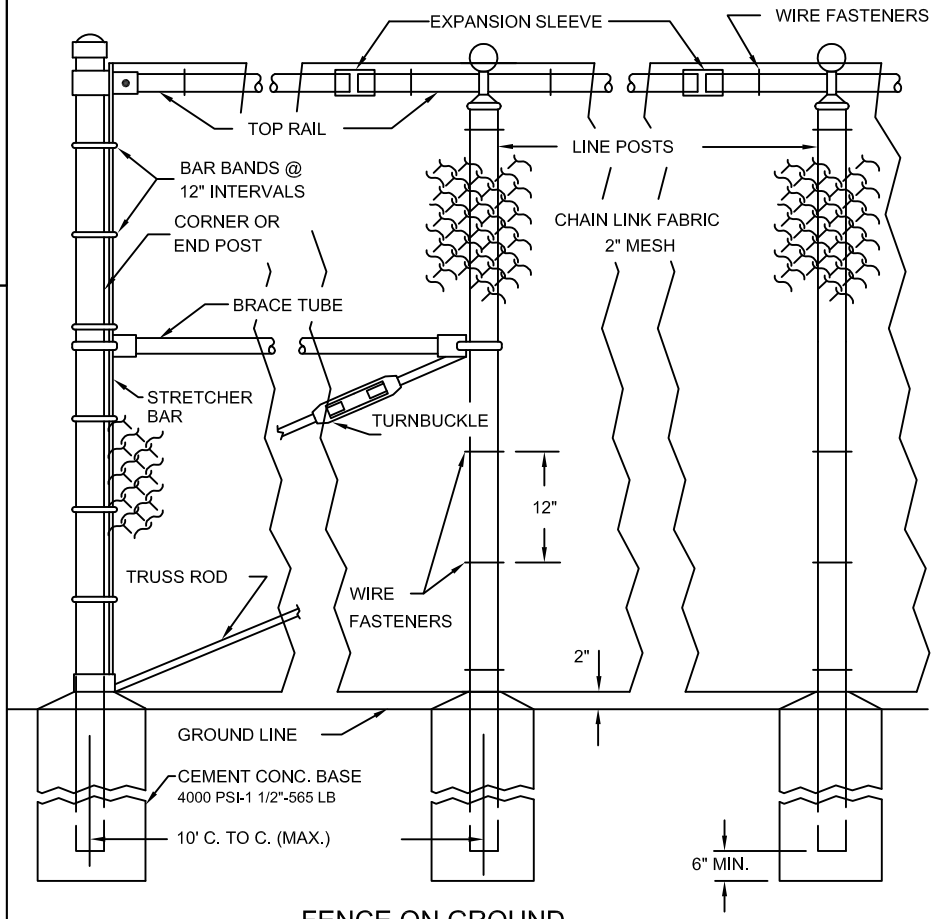

FENCE ON GROUND

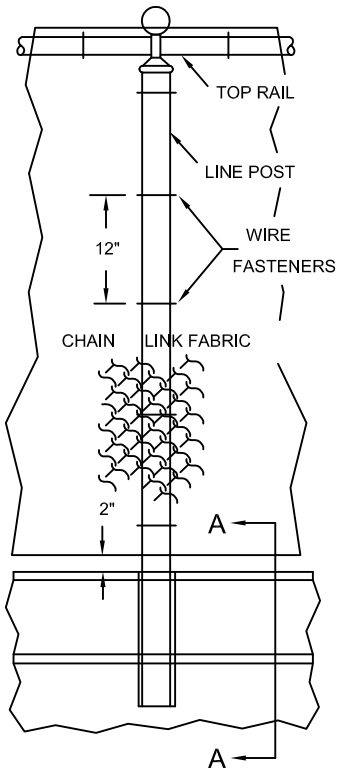

FENCE ON CONCRETE WALL

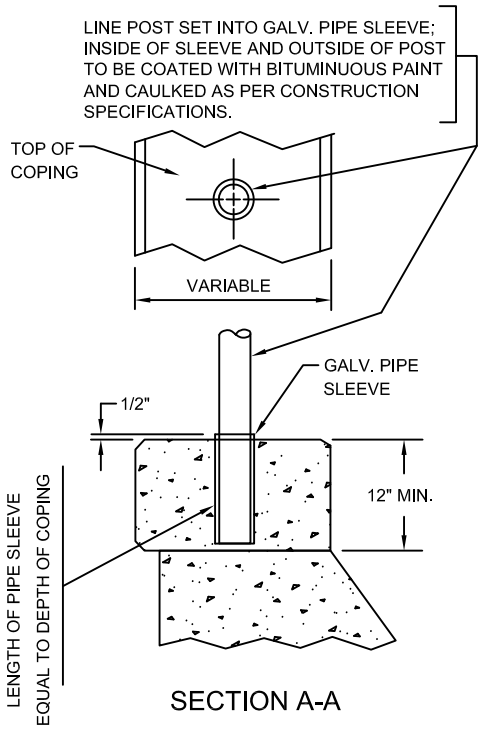

SECTION A-A

NOTES:

1. FABRIC FOR FENCES 4' OR LESS IN HEIGHT.
   TOP SELVAGE TO HAVE KNUCKLED FINISH. BOTTOM SELVAGE TO HAVE TWISTED AND BARBED FINISH UNLESS OTHERWISE NOTED.
   FABRIC FOR FENCES 5' OR OVER IN HEIGHT.
   BOTH TOP AND BOTTOM SELVAGE TO HAVE TWISTED AND BARBED FINISH UNLESS OTHERWISE NOTED.
2. THE HEIGHT OF FENCE TO BE AS SPECIFIED.
3. GRADE OF FENCE TO BE PARALLEL WITH THE GRADE OF SIDEWALKS, CURBING, GROUND OR TOP OF WALL.
4. LINE POSTS TO BE SPACED 10'-0" C. TO C. MAXIMUM EXCEPT ON CURVES WHERE THEY SHALL BE SPACED AS FOLLOWS:

CURVES 200' TO 500' RADIUS	8'-0" C. TO C. MAXIMUM
CURVES 100' TO 200' RADIUS	6'-0" C. TO C. MAXIMUM
CURVES LESS THAN 100' RADIUS	5'-0" C. TO C. MAXIMUM

5. FOR POST BASES AND CABLE ATTACHMENTS, SEE DRAWING E 404.5.0
6. FOR DESCRIPTION, MATERIALS AND CONSTRUCTION METHODS, SEE STANDARD SPECIFICATIONS.

DATE OF ISSUE
MARCH 2012

DRAWING NUMBER
E 404.4.0

massDOT
Massachusetts Department of Transportation
Highway Division

CONSTRUCTION STANDARDS

CHAIN LINK FENCE DETAILS OF CABLE ATTACHMENTS & POST BASES

DATE OF ISSUE
MARCH 2012

DRAWING NUMBER
E 404.5.0

POST BASES

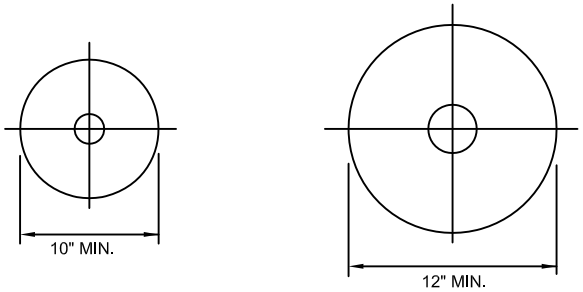

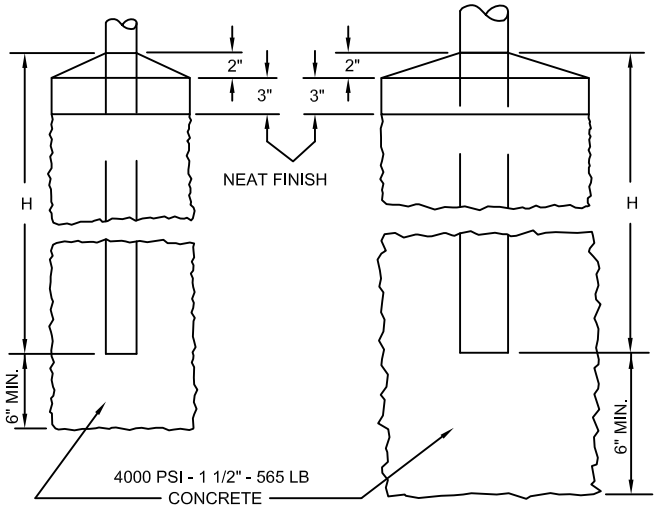

FOR CORNER, END LINE AND PULL POSTS

FOR GATE POSTS

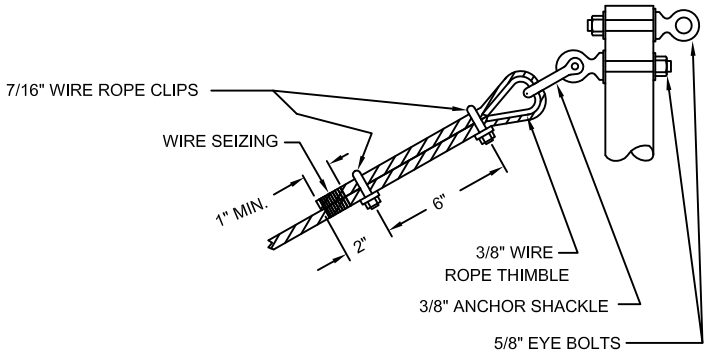

FOR END PULL POST

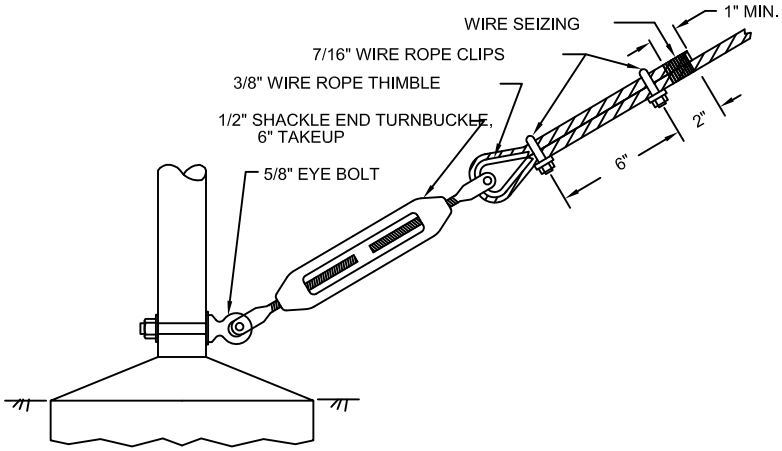

FOR FASTENING TO BASE OF POST

FENCE HEIGHT	MIN. H
5' OR LESS	2'-6"
OVER 5'	3'-0"

NOTE:
1. FOR EYE BOLT INSTALLATION THROUGH PIPE SECTIONS, USE 2 WASHERS ON "SHOULDER SIDE" AND 1 WASHER WITH LOCK WASHER ON "NUT SIDE" OF POSTS.

DETAILS OF CABLE ATTACHMENTS

massDOT
Massachusetts Department of Transportation
Highway Division

CONSTRUCTION STANDARDS

CHAIN LINK FENCE – SWING GATE

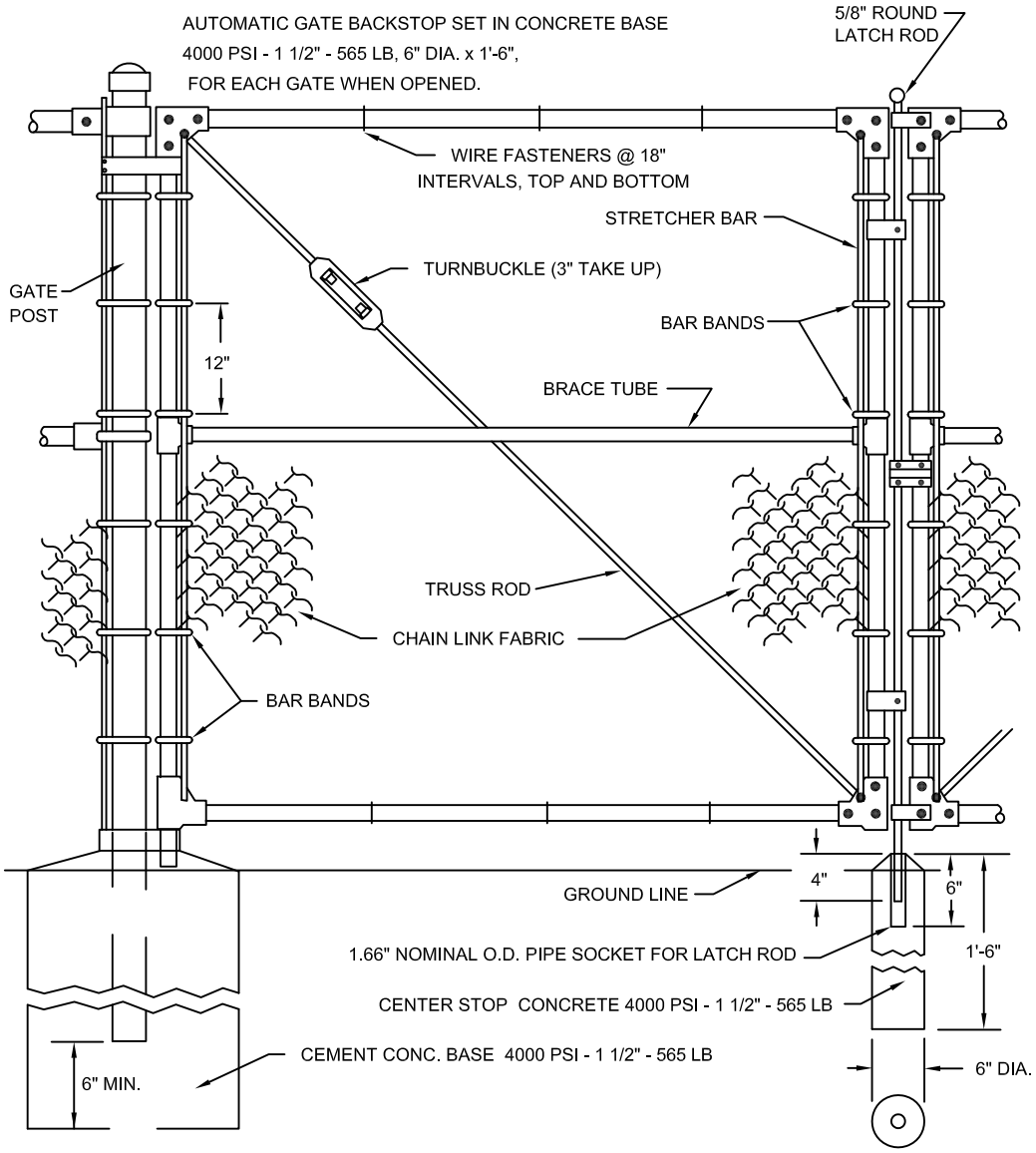

END POSTS TO BE USED ON LATCH SIDE OF SINGLE GATE OPENINGS.

1. CHAIN LINK FABRIC FOR GATES TO BE THE SAME AS REQUIRED FOR FENCE.

2. FOR GATE POST BASE, SEE DRAWING 404.5.0

DOUBLE GATES

DATE OF ISSUE
MARCH 2012

DRAWING NUMBER
E 404.6.0

massDOT
Massachusetts Department of Transportation
Highway Division

CONSTRUCTION STANDARDS

CHAIN LINK FENCE
CANTILEVER GATE

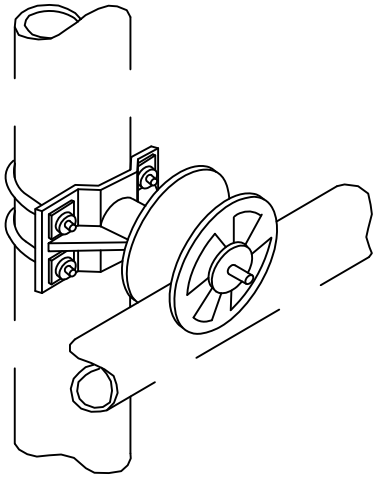

WHEEL EQUIPPED WITH ROLLER BEARINGS
AND LUBRICATION FITTING.
MASSIVE MALLEABLE CONSTRUCTION.
4 ASSEMBLIES NEEDED PER SECTION.

ROLLER ASSEMBLY

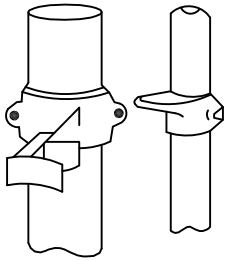

LATCH AND LOCKING
ASSEMBLY

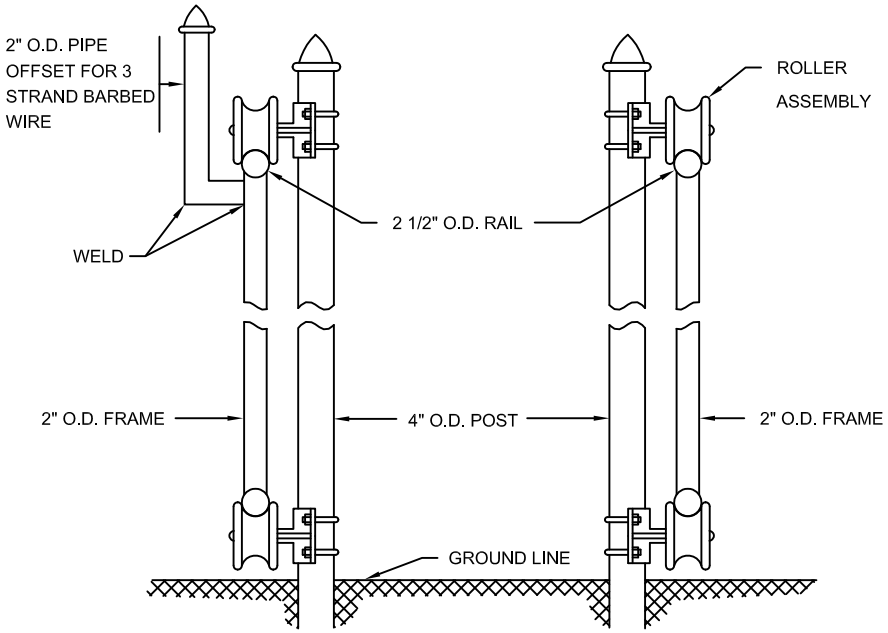

SPECIFICATIONS OF GATE FRAME

TOP AND BOTTOM MEMBER---------- 2 1/2" O.D. PIPE
UPRIGHT MEMBERS---------- 2" O.D. PIPE
HORIZONTAL AND DIAGONAL BRACES----- 1 5/8" O.D. PIPE

SIDE VIEW SHOWING TRUSS TYPE CONSTRUCTION

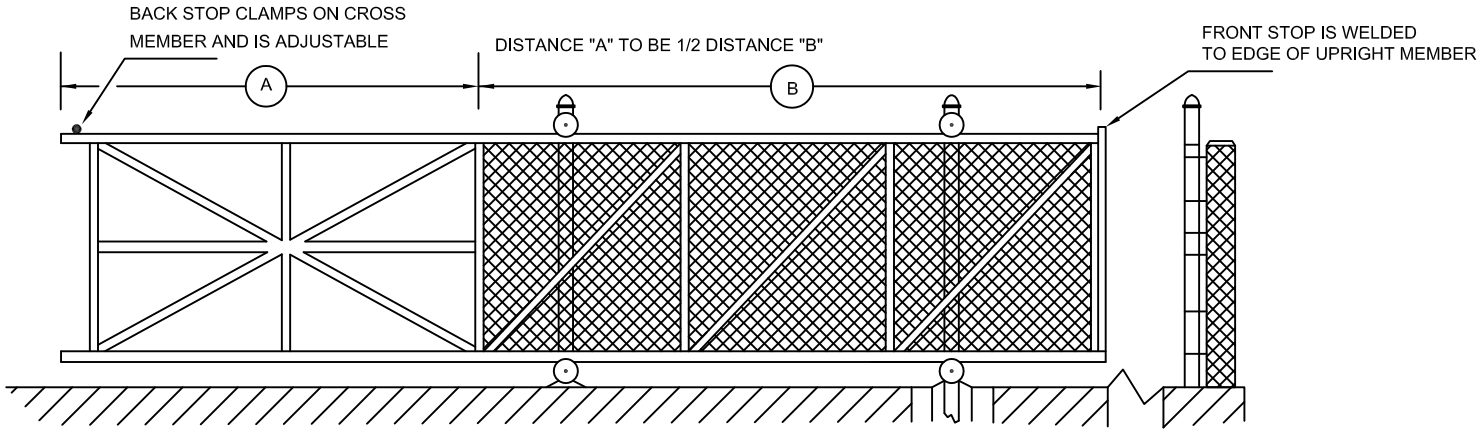

DATE OF ISSUE
MARCH 2012

DRAWING NUMBER
E 404.7.0

massDOT
Massachusetts Department of Transportation
Highway Division

CONSTRUCTION STANDARDS

CHAIN LINK FENCE MOUNTED ON GUARD RAIL

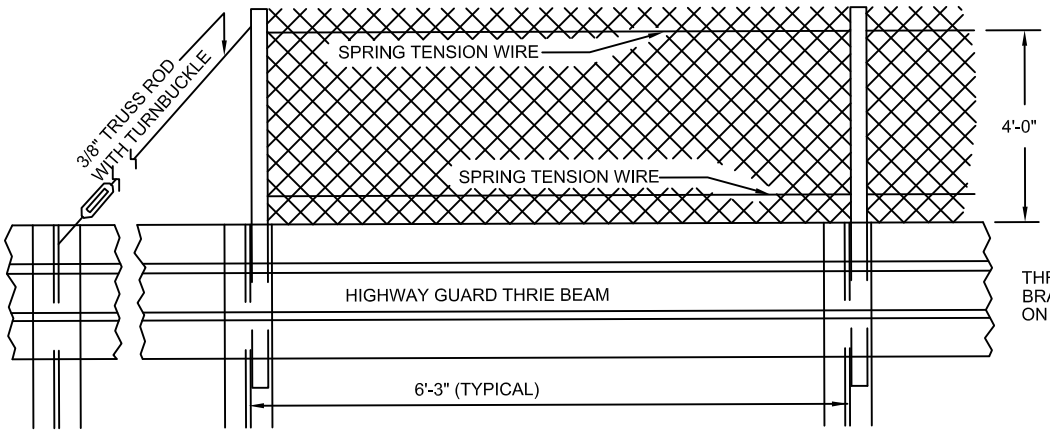

ELEVATION

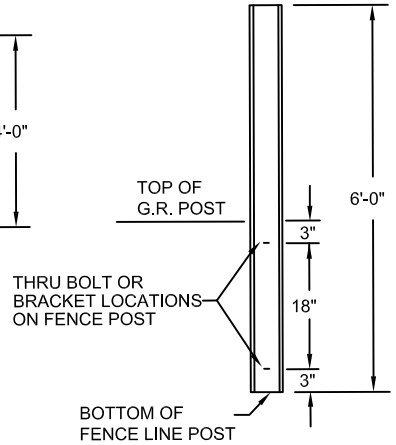

CHAIN LINK FENCE POST

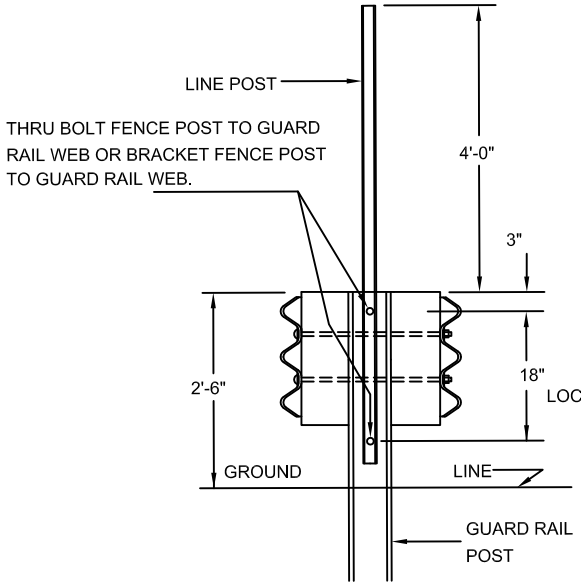

ELEVATION

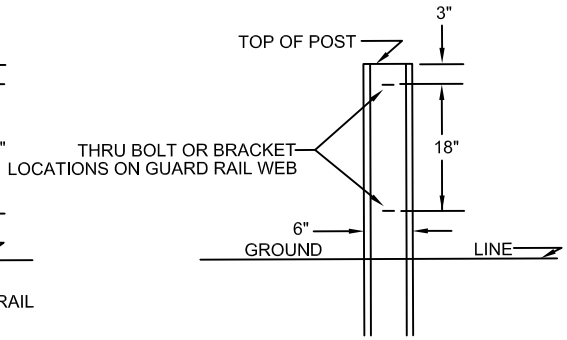

G.R. POST

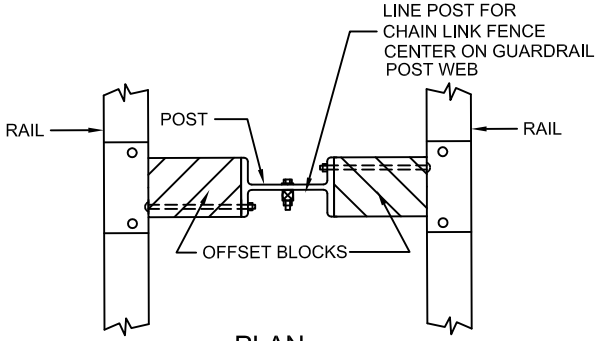

PLAN

NOTES:

1. ALL POSTS (LINE, END, AND INTERMEDIATE) SHALL CONFORM TO DETAILS SHOWN ON DRAWING E 404.1.0
2. END BRACING TO CONFORM TO DETAIL SHOWN ABOVE. INTERMEDIATE BRACING SHALL BE IN CONFORMANCE TO DETAILS SHOWN ON DRAWING E 404.2.0
3. FOR DESCRIPTION, MATERIALS AND METHODS, SEE STANDARD SPECIFICATIONS.
4. SHALL USE A ROUND OR C FENCE POST

DATE OF ISSUE
MARCH 2012

DRAWING NUMBER
E 404.8.0

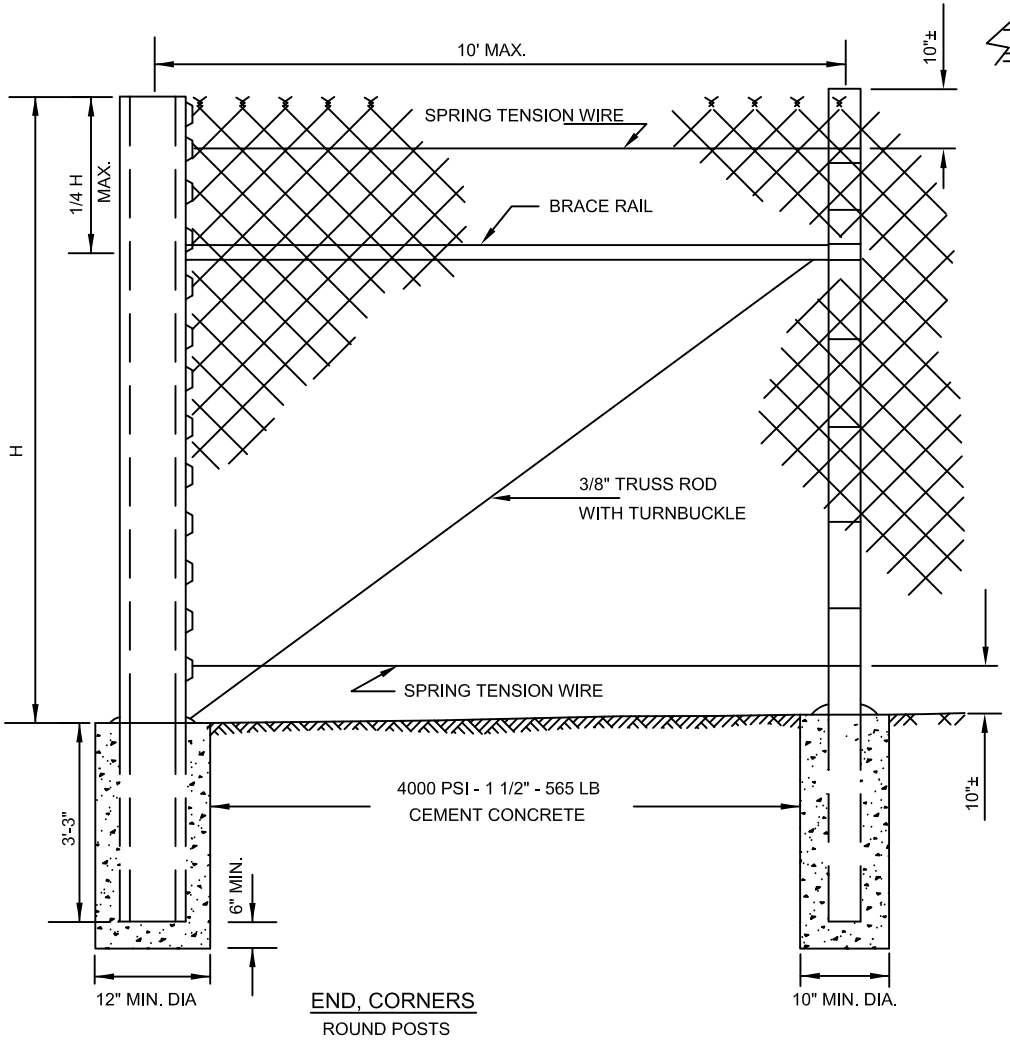

END, CORNERS
ROUND POSTS

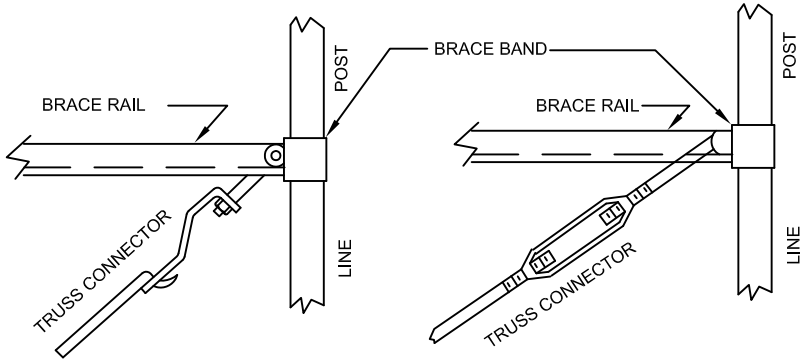

BRACE & TRUSS CONNECTIONS

massDOT
Massachusetts Department of Transportation
Highway Division

CONSTRUCTION STANDARDS

CHAIN LINK FENCE POST DETAILS

DATE OF ISSUE
MARCH 2012

DRAWING NUMBER
E 404.10.0

massDOT
Massachusetts Department of Transportation
Highway Division

CONSTRUCTION STANDARDS

WETLANDS PROTECTION ACT SIGN

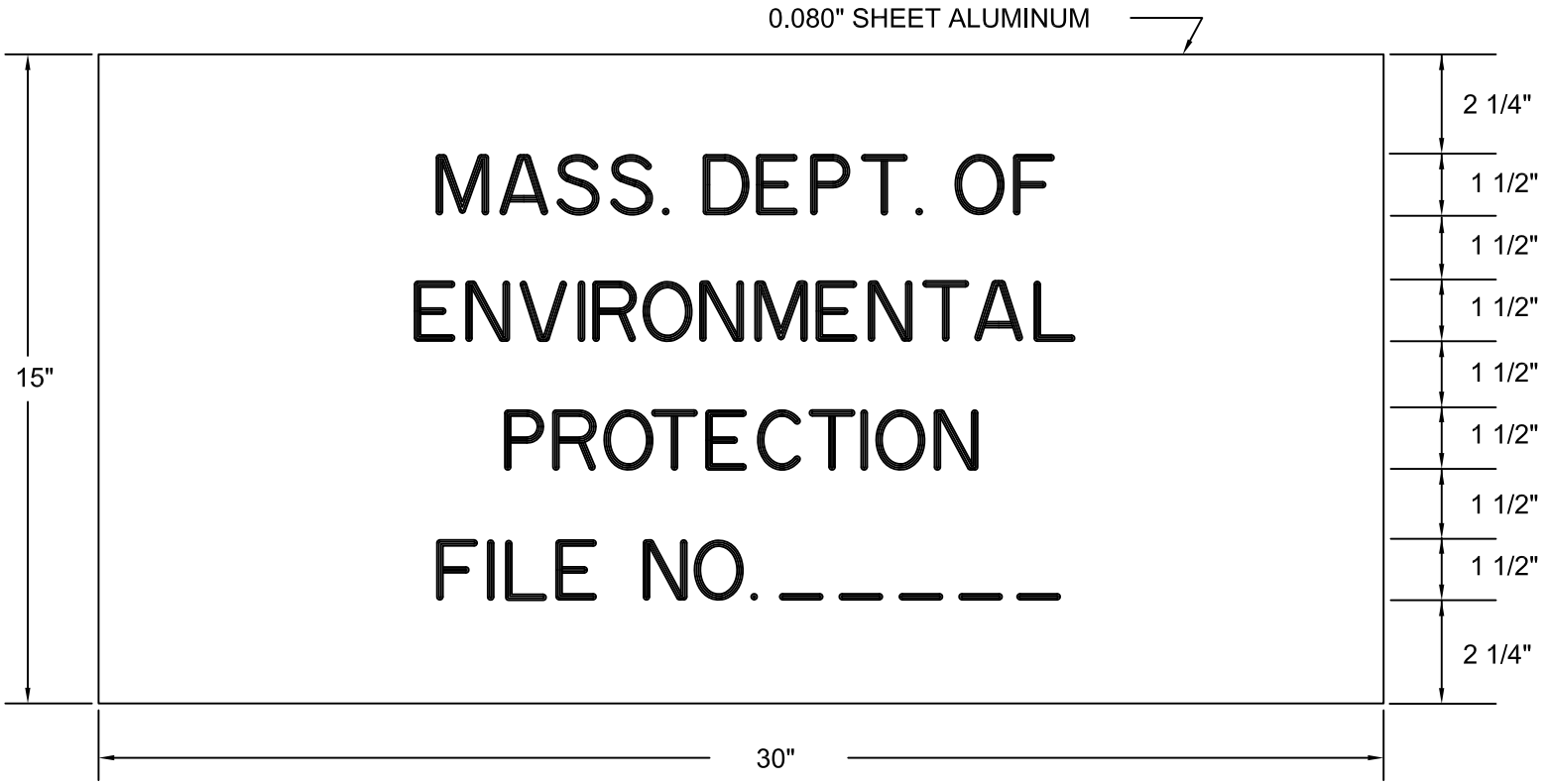

COLORS
- LEGEND - BLACK (NON-REFLECTORIZED)
- BACKGROUND - WHITE (REFLECTORIZED)

THE SIGN IS TO BE MOUNTED ON A MASSDOT HIGHWAY DIVISION STANDARD "P-5" POST

NOTES:
1. THE SIGN IS PLACED ON ALL PROJECTS SUBJECT TO THE PROVISIONS OF THE MASSACHUSETTS WETLANDS PROTECTION ACT.
2. THE LOCATION OF THE SIGN IS TO BE DETERMINED BY THE ENGINEER.
3. SEE SPECIAL PROVISIONS FOR THE MANUFACTURE, MAINTENANCE, ERECTION AND REMOVAL RESPONSIBILITIES.
4. USE SERIES "D" FOR LETTERING.

DATE OF ISSUE
MARCH 2012

DRAWING NUMBER
E 501.1.0

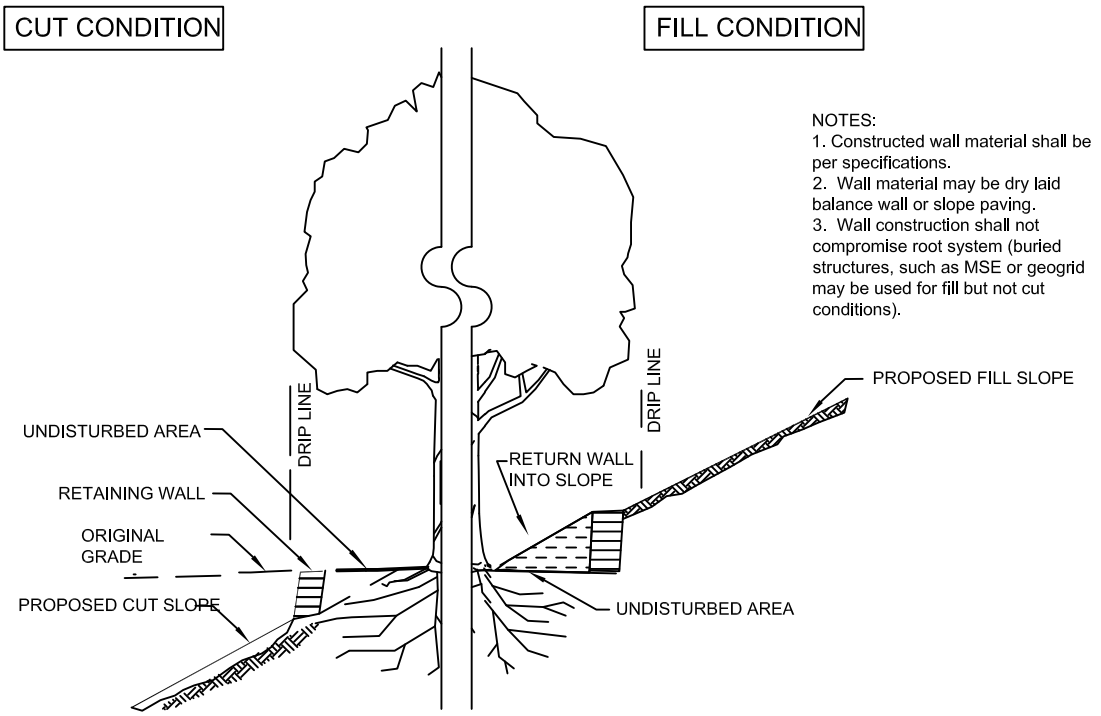

NOTES:
1. Constructed wall material shall be per specifications.
2. Wall material may be dry laid balance wall or slope paving.
3. Wall construction shall not compromise root system (buried structures, such as MSE or geogrid may be used for fill but not cut conditions).

SECTION VIEW

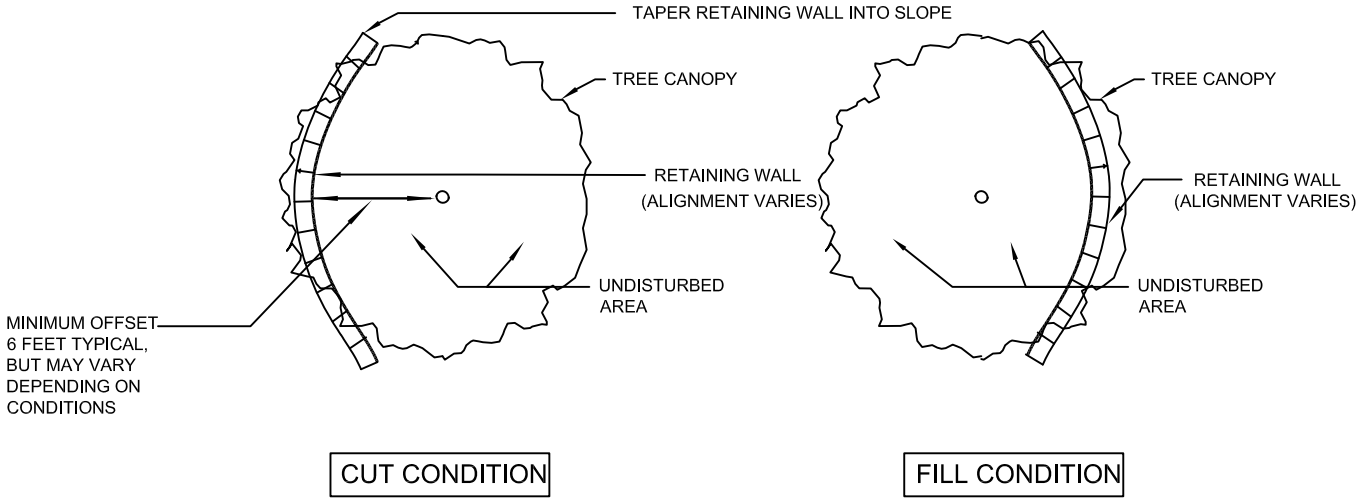

PLAN VIEW

massDOT Massachusetts Department of Transportation Highway Division
CONSTRUCTION STANDARDS

TREE WELLS

DATE OF ISSUE
MARCH 2012

DRAWING NUMBER
E 502.1.0

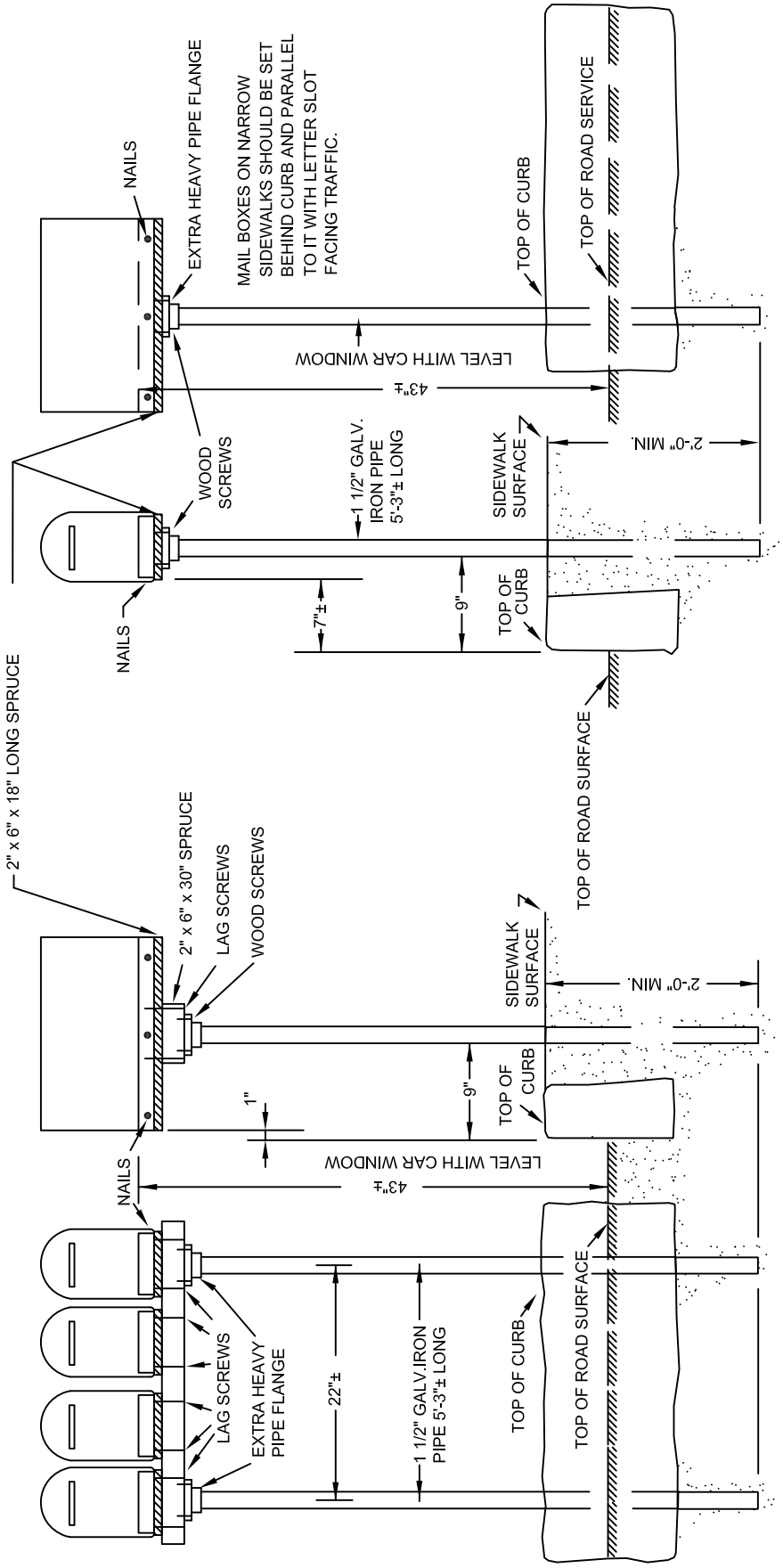

NOTES:

1. LUMBER TO BE PLANED ON ALL FOUR SIDES TO FULL 2" x 6" SIZE TO FIT BOTTOM OF MAIL BOXES.
2. TO SET 1 1/2" GALVANIZED PIPE POST, USE DRIVING POINT OF SAME SIZE, THEN TAMP POST INTO PLACE SO AS TO BE PLUMB BOTH WAYS.
3. ALL FITTINGS (PIPE FLANGES, PIPE, SCREWS, NAILS, ETC.) ARE TO BE GALVANIZED.
4. FOR DESCRIPTIONS, MATERIALS, AND CONSTRUCTIONS METHODS SEE STANDARD SPECIFICATIONS.
5. A 4" X 4" PRESSURE TREATED WOOD POST MAY BE SUBSTITUTED FOR A PIPE POST.

massDOT Massachusetts Department of Transportation Highway Division

CONSTRUCTION STANDARDS

SETTING RURAL MAILBOXES

DATE OF ISSUE
MARCH 2012

DRAWING NUMBER
E 504.1.0

massDOT
Massachusetts Department of Transportation
Highway Division

CONSTRUCTION STANDARDS

DEMOUNTABLE REFLECTORIZED STATION MARKER AND PROJECT MARKER

DATE OF ISSUE
MARCH 2012

DRAWING NUMBER
E 505.1.0

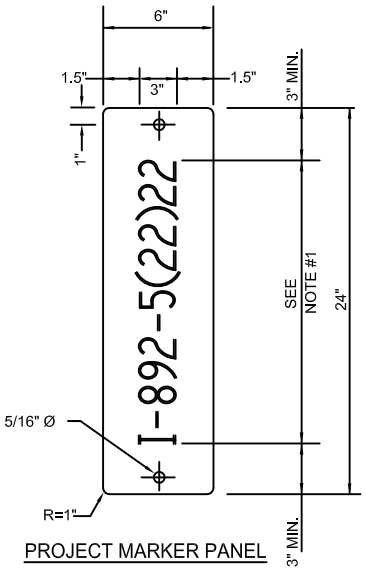

PROJECT MARKER PANEL

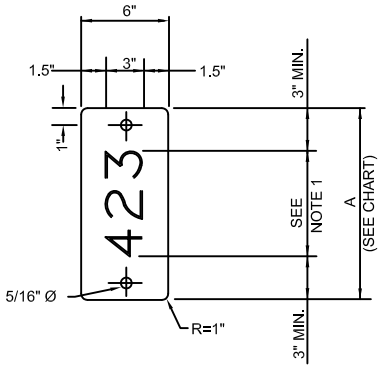

STATION MARKER PANEL

# OF DIGITS	A inches
1	8
2	11
3	13

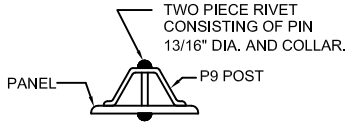

METHOD OF ATTACHING PANEL TO P-9 POST

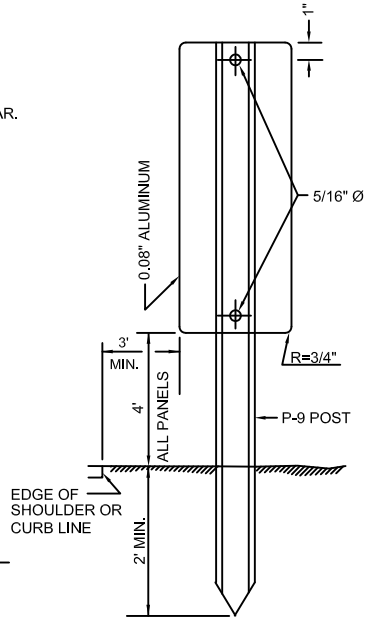

TYPICAL MARKER INSTALLATION

SPACING OF STATION NUMBERS

S_1 - 1300', BOTH SIDES, STAGGER
S_2 - 650', BOTH SIDES

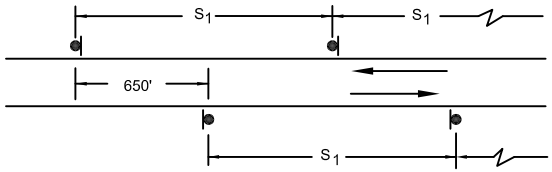

SINGLE ROADWAY

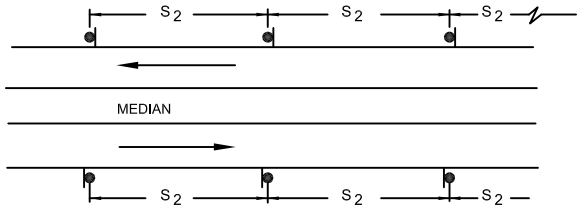

DIVIDED ROADWAY

OMIT MARKERS FROM INTERCHANGE

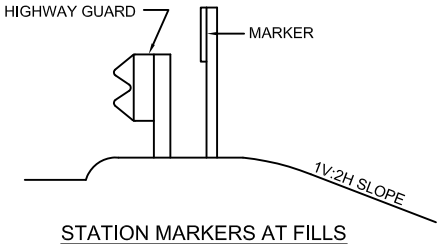

STATION MARKERS AT FILLS

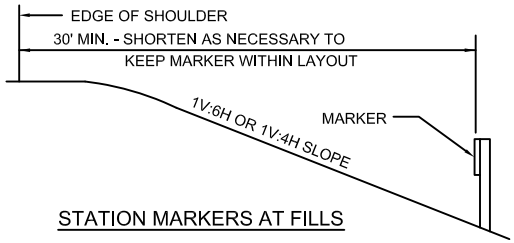

STATION MARKERS AT FILLS

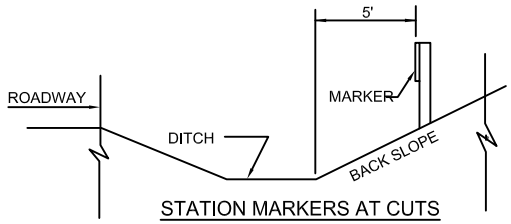

STATION MARKERS AT CUTS

NOTES:

1. THE LEGEND IS TO BE CENTERED AND THE SPACING OF THE CHARACTERS IS TO CONFORM TO THE FEDERAL HIGHWAY ADMINISTRATION RECOMMENDATION FOR SERIES "C" TYPE LETTERING.
2. THE STATION DESIGNATIONS ARE TO BE EVEN STATIONS i.e. NO PLUS STATIONS.
3. THE PANELS FOR THE LEGEND ARE TO BE 0.08" SHEET ALUMINUM. FABRICATED AND FINISHED ACCORDING TO THE STANDARD SPECIFICATIONS.
4. THE LETTERS AND NUMERALS AND METHOD OF APPLICATIONS ARE DESCRIBED IN THE STANDARD SPECIFICATIONS.
5. ALL PANELS ARE TO BE MOUNTED ON NEW P-9 POST IN THE MANNER DESCRIBED IN THE STANDARD SPECIFICATIONS.
6. ONE MARKER IS TO BE PROVIDED AT CULVERT END, WHERE NO GUARD RAIL IS INSTALLED IT IS TO BE LOCATED AT THE NEAR BACK CORNER OF THE END IN THE DIRECTION OF TRAFFIC.
7. MARKERS ARE TO BE PLACED AT 650' INTERVALS; ON UNDIVIDED ROADWAY STAGGER ON EACH SIDE, ON DIVIDED ROADWAY PLACE MARKERS OPPOSITE EACH OTHER.
8. SEE DRAWING E TR.2.3 FOR P-9 POST DIMENSIONS.

REPLACEMENT OF BOUND BROKEN OR LOST WILL BE INSCRIBED WITH THE YEAR BOUND POINT WAS ESTABLISHED.

BOUNDS LOCATING NEW CORNERS WILL BE INSCRIBED WITH THE YEAR NEW CORNER WAS ESTABLISHED.

ALL LETTERING TO BE

1/2" V SUNK LETTERS

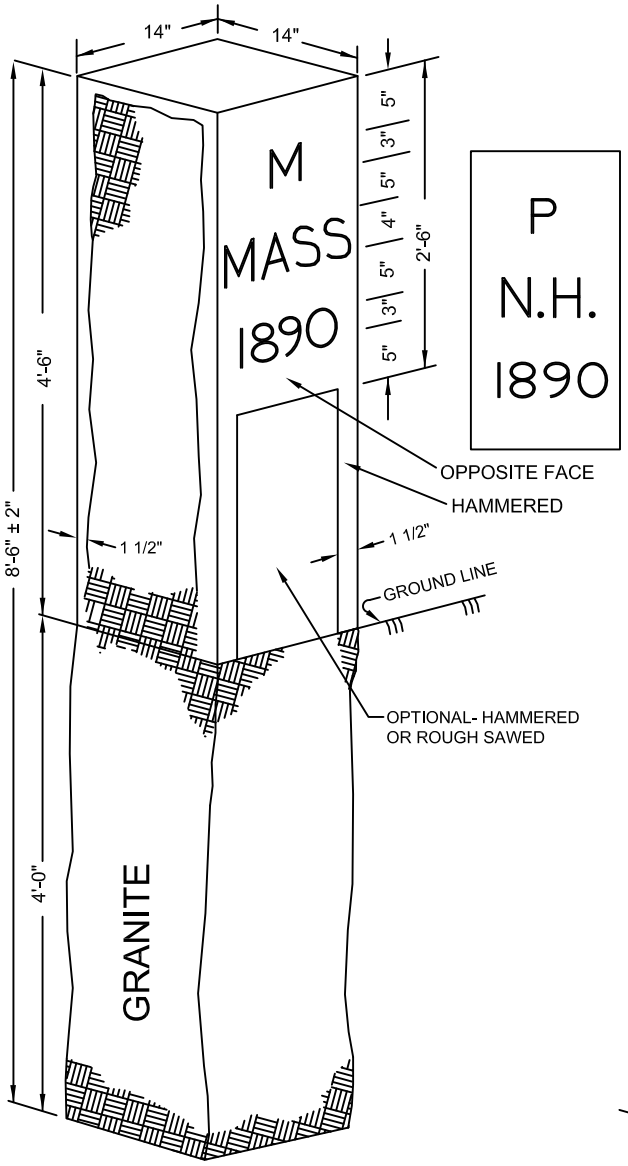

STATE LINE

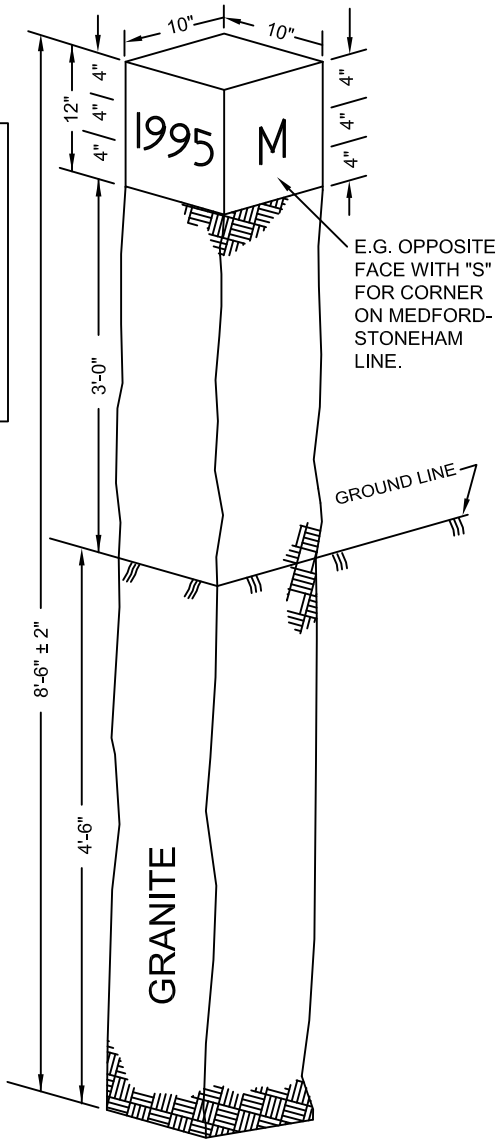

CITY OR TOWN CORNER

NOTES:

1. TOP AND 4 SIDES FOR A DISTANCE OF 12" TO BE HAMMERED SMOOTH.
2. IN SPECIFIED LOCATIONS, MONUMENTS MAY BE HAMMERED SMOOTH ON TOP AND 4 SIDES ABOVE GROUND LINE.
3. FOR DESCRIPTIONS, MATERIALS AND CONSTRUCTION METHODS SEE STANDARD SPECIFICATIONS.

massDOT Massachusetts Department of Transportation Highway Division CONSTRUCTION STANDARDS	BOUND LETTERED GRANITE	DATE OF ISSUE MARCH 2012 DRAWING NUMBER **E 506.2.0**