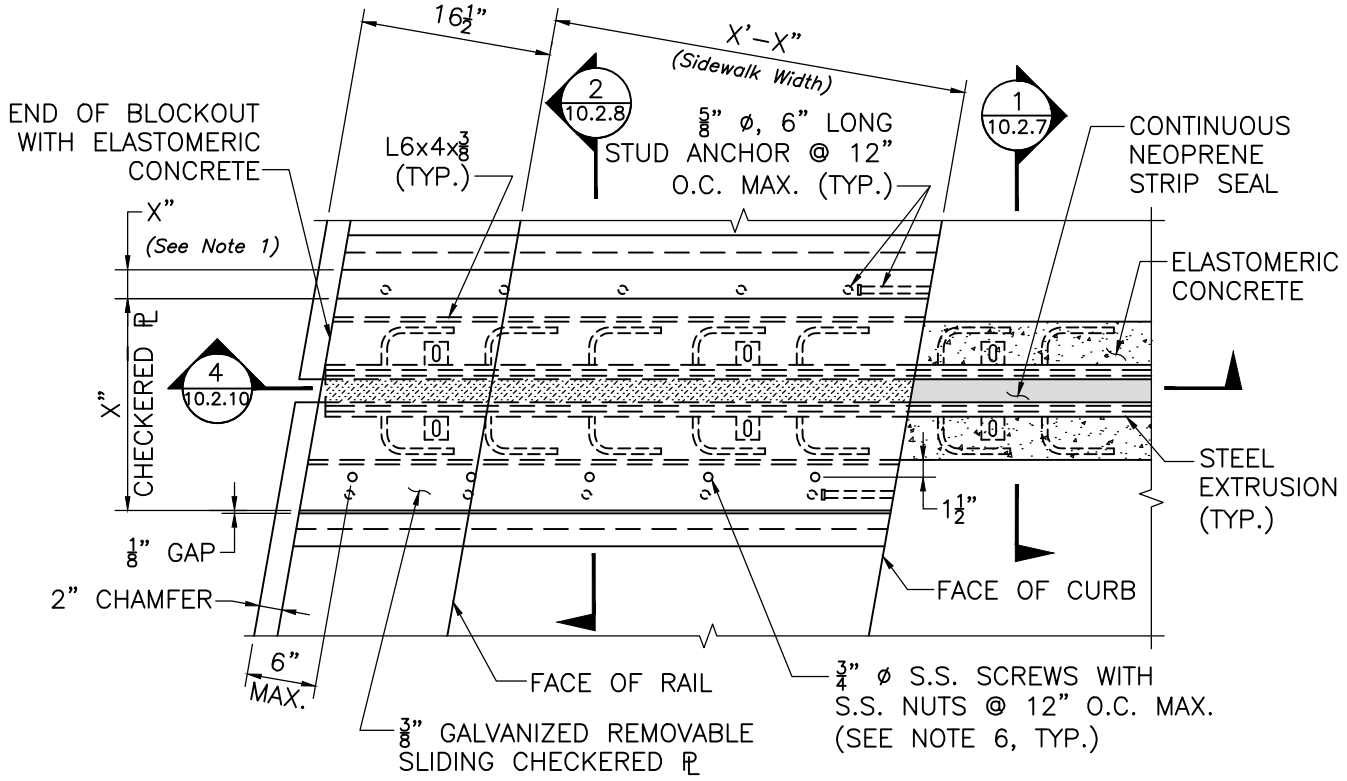

PLAN – STRIP SEAL JOINT AT SIDEWALK

SCALE: 1" = 1'–0"

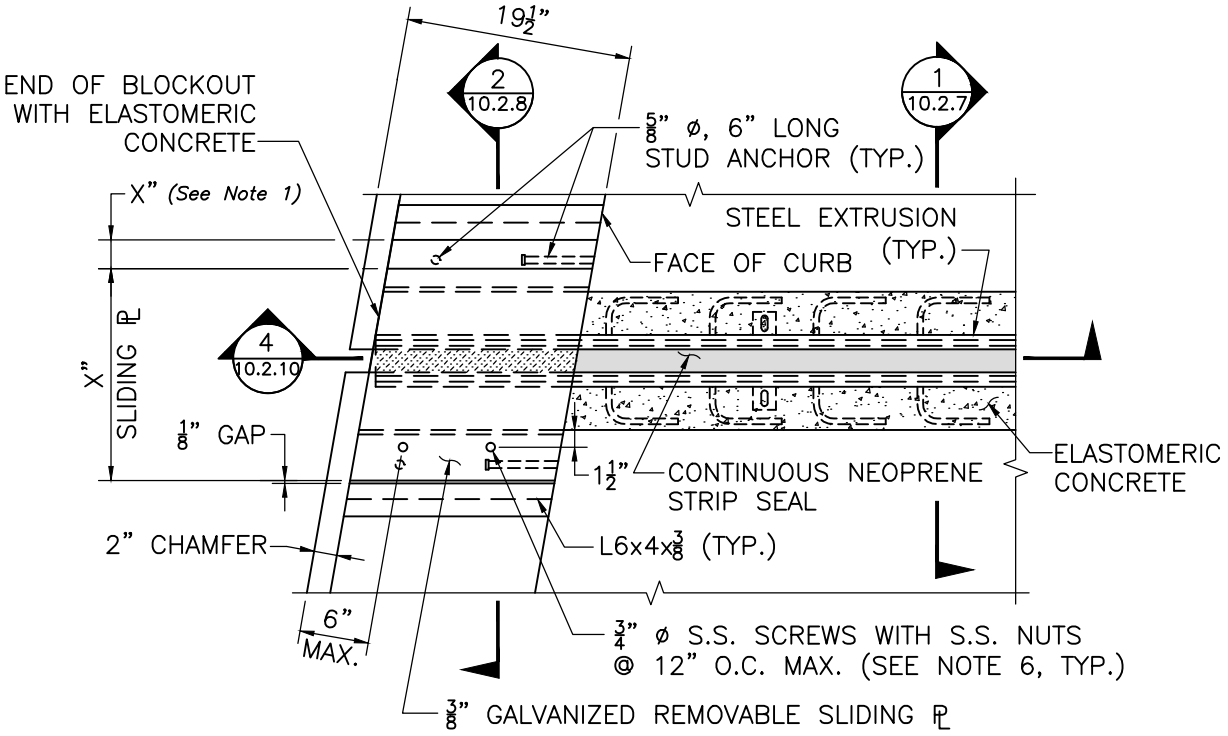

PLAN – STRIP SEAL JOINT AT SAFETY CURB

SCALE: 1" = 1'–0"

NOTES:

1. *X" = (Joint Width + ½")*
2. *See Dwg. No. 10.2.16 for Construction Notes to be placed on Construction Drawings.*

massDOT Massachusetts Department of Transportation Highway Division

LRFD BRIDGE MANUAL, PART II

S3–TL4 RAILING PLAN, SKEW ⩽ 35°

STRIP SEAL JOINT DETAILS

DATE OF ISSUE
JUNE 2013

DRAWING NUMBER
10.2.1