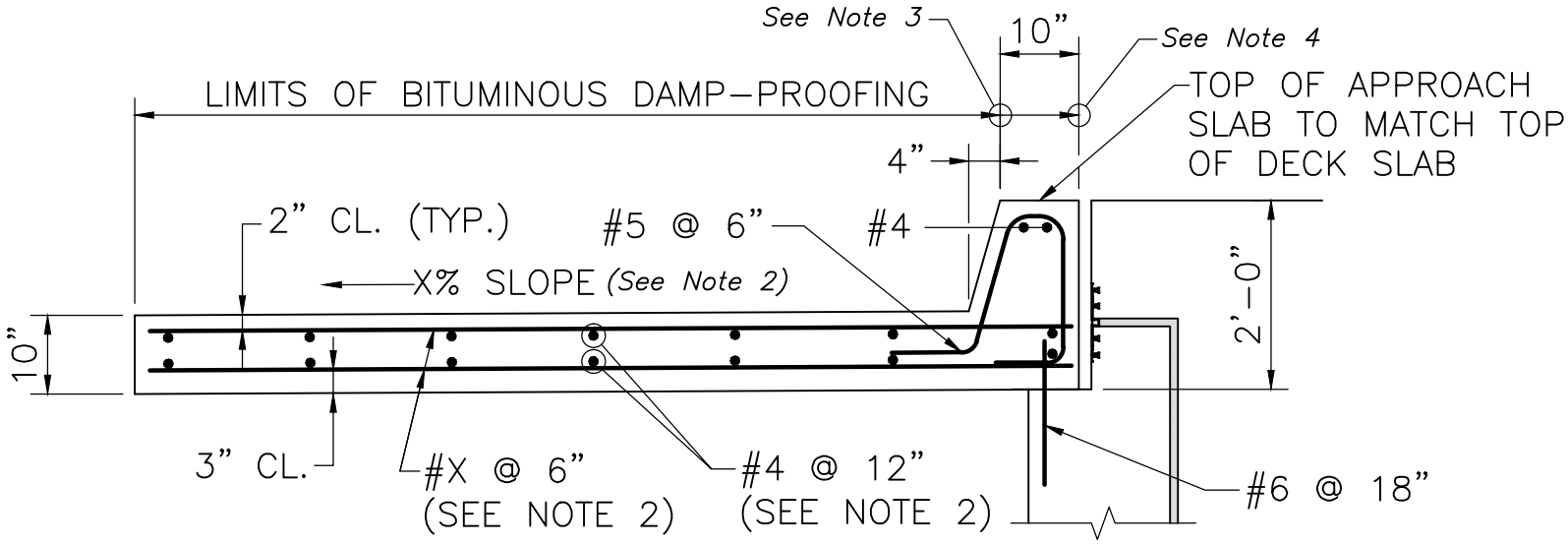

NOTES:

1. APPROACH SLAB TO BE 4000 PSI, $1\frac{1}{2}$ IN, 565 CEMENT CONCRETE.
2. PLACE LONGITUDINAL REINFORCEMENT *(Specify orientation per Dwg. No. 3.1.12).* PLACE TRANSVERSE REINFORCEMENT PARALLEL TO ABUTMENT.

APPROACH SLAB DETAILS

SCALE: $\frac{1}{2}$" = 1'-0"

NOTES:

1. *See Roadway Section drawings for abutment details and dimensions not shown here.*
2. *If approach roadway slopes down and away from the abutment at greater than 2%, change the slope of approach slab to approach roadway grade plus 1%, rounded up to the nearest 1%. Otherwise set slope at 2%.*
3. *End Bituminous damp-proofing here when using Asphaltic Bridge Joints.*
4. *End Bituminous damp-proofing here when using armored joints.*

massDOT
LRFD BRIDGE MANUAL, PART II

APPROACH SLAB TYPE III

ABUTMENT DETAILS

DATE OF ISSUE
JUNE 2013

DRAWING NUMBER
3.1.15