PILE DETAILS
LONGITUDINAL LAYOUT
FOUNDATIONS AND FILL

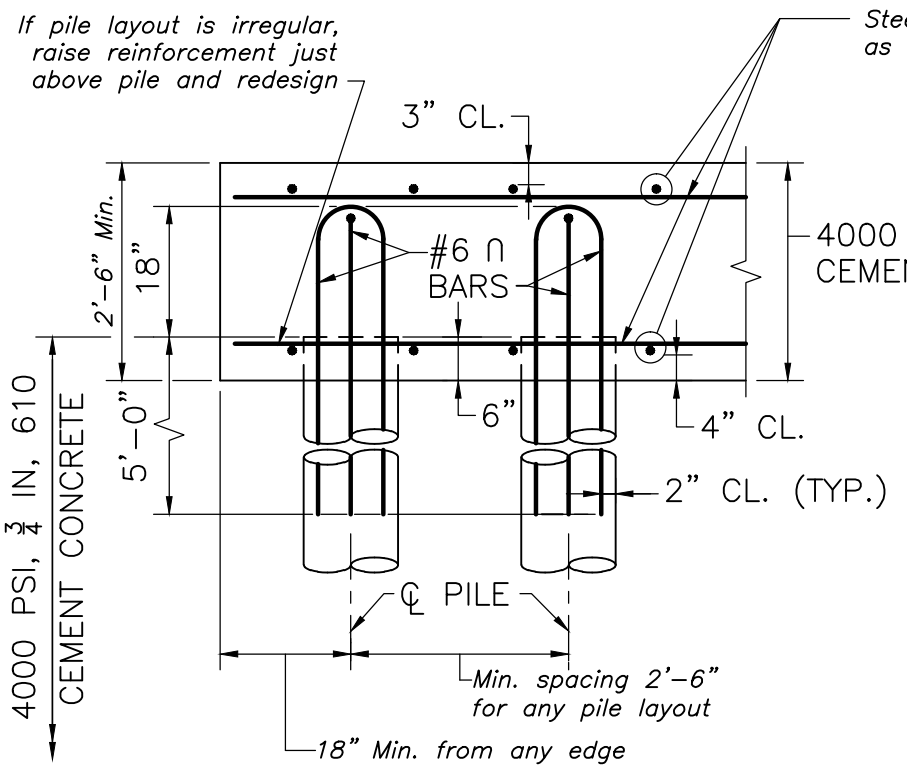

FOOTING WITH CAST-IN-PLACE CONCRETE PILES AND PIPE PILES FILLED WITH CONCRETE

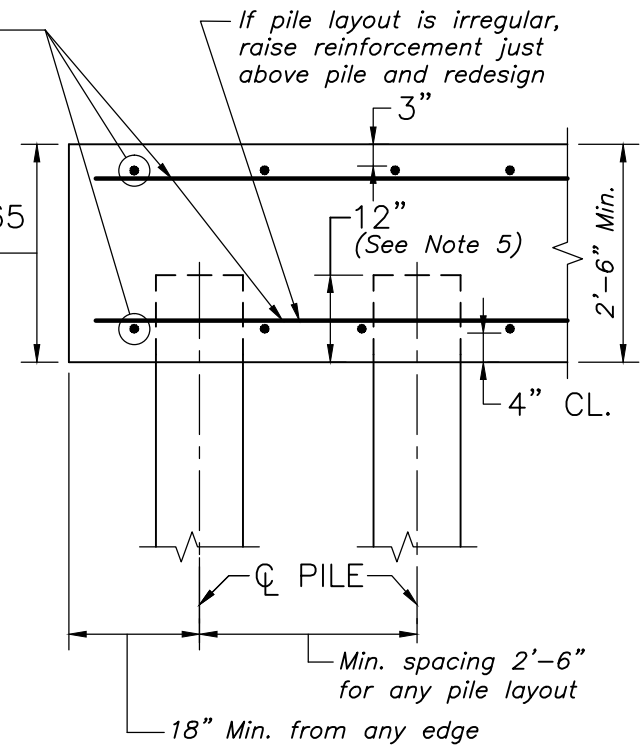

FOOTING WITH TIMBER OR STEEL PILES

(See Dwg. No. 3.1.6 for Construction Notes)

PILE LAYOUT
SCALE: ½" = 1'-0"

NOTES:

1. Show and note total number of piles in plan view of pile layout for each substructure.
2. Note the estimated pile tip elevations on the Construction Drawings.
3. Maximum spacing of piles is 10'-0".
4. Provide at least 18" of concrete above the top of each pile.
5. Embedment of piles may exceed 12", if required.

DATE OF ISSUE
JUNE 2013

DRAWING NUMBER
3.6.5