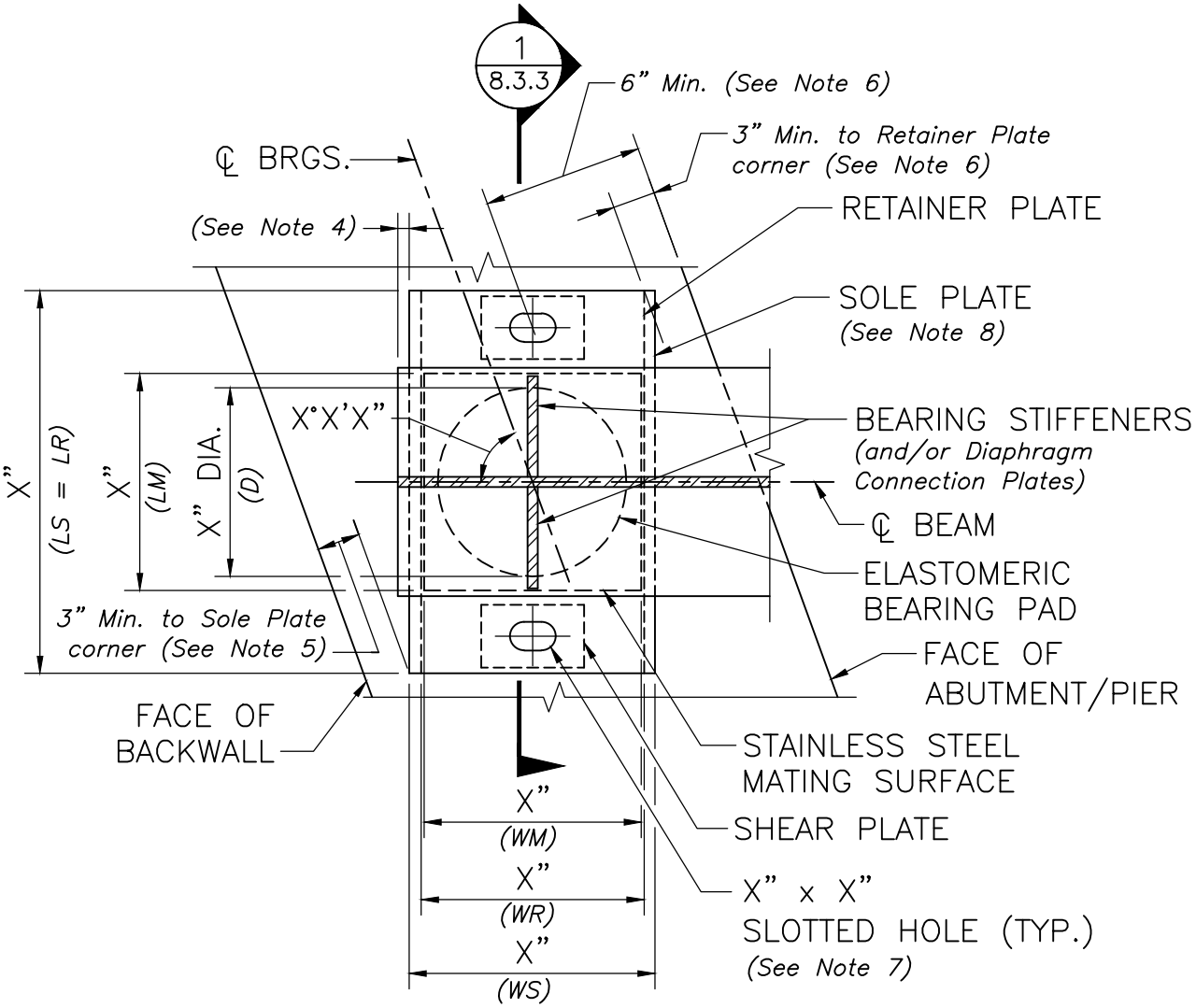

PLAN

SCALE: 1" = 1'–0"

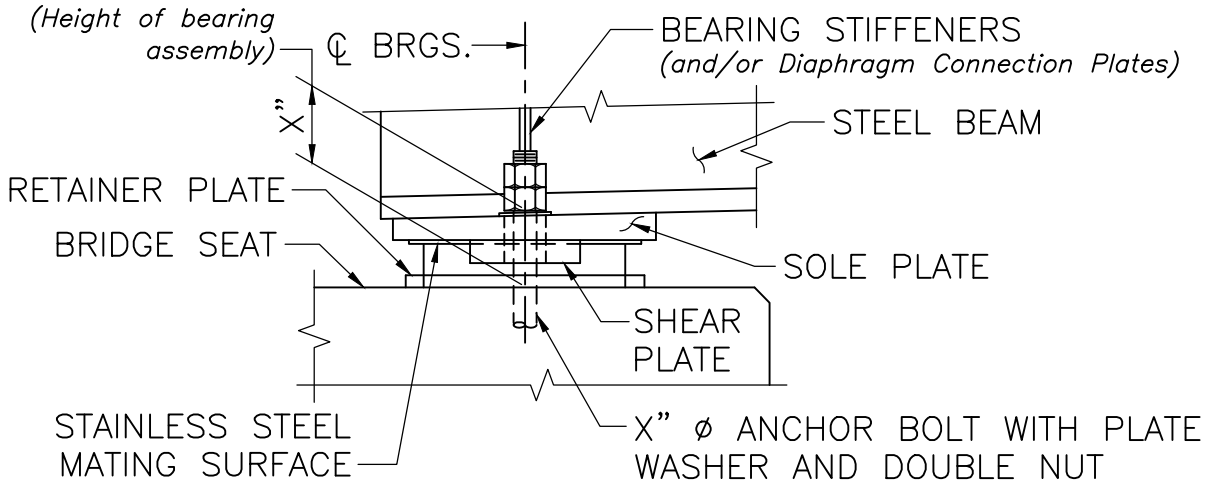

ELEVATION

SCALE: 1" = 1'–0"

massDOT Massachusetts Department of Transportation Highway Division LRFD BRIDGE MANUAL, PART II	STANDARD BEARING ASSEMBLY PLAN AND ELEVATION SLIDING BEARINGS – STEEL BEAMS	DATE OF ISSUE JUNE 2013 DRAWING NUMBER **8.3.1**