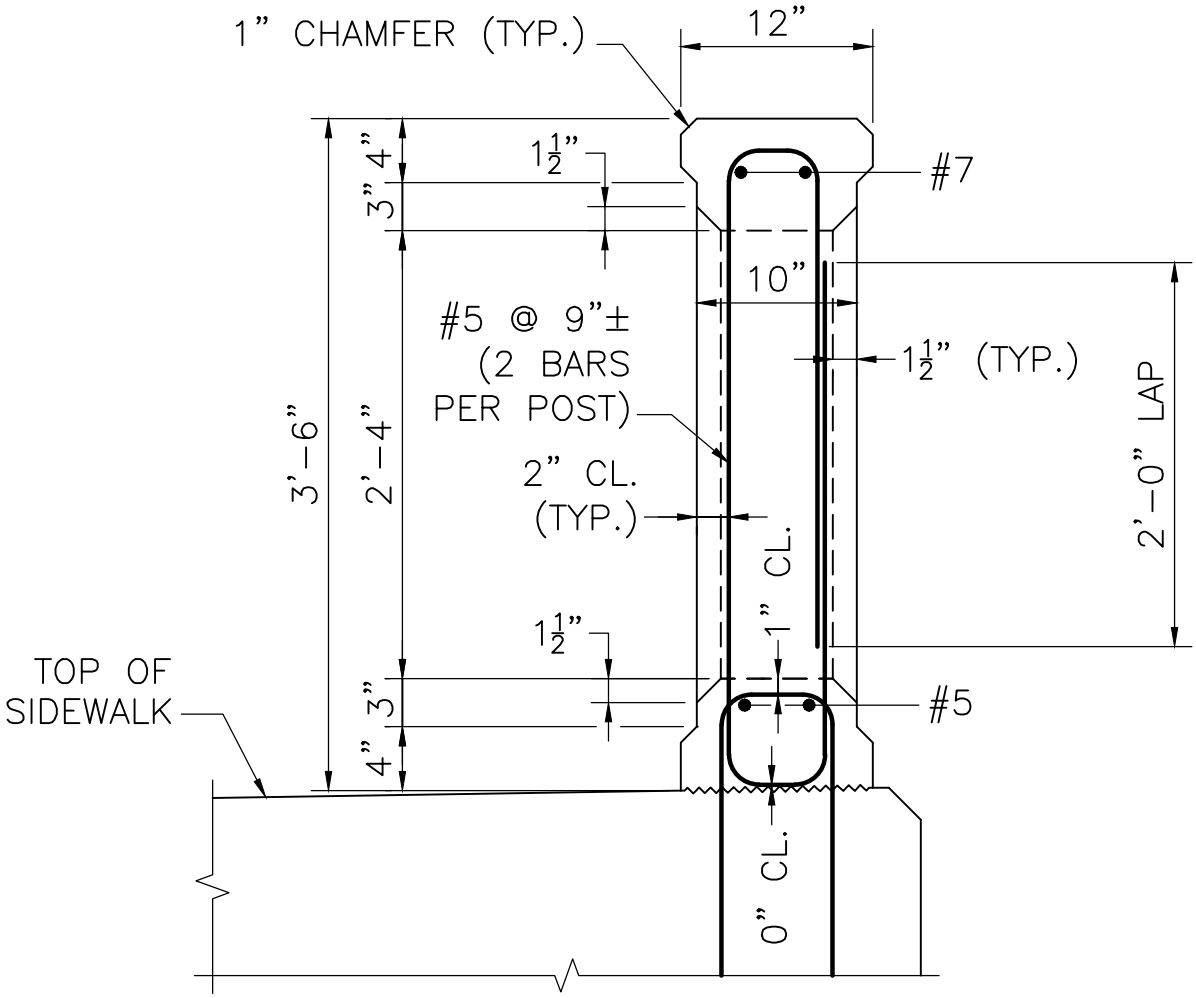

NOTE:

FOR SIDEWALK REINFORCEMENT SEE SECTION THRU SIDEWALK.

SECTION THRU BARRIER AT SIDEWALK

SCALE: 1" = 1'-0"

massDOT Massachusetts Department of Transportation Highway Division LRFD BRIDGE MANUAL, PART II	SECTION THRU BARRIER AT SIDEWALK CT-TL2 BARRIER	DATE OF ISSUE JUNE 2013 DRAWING NUMBER **9.2.7**