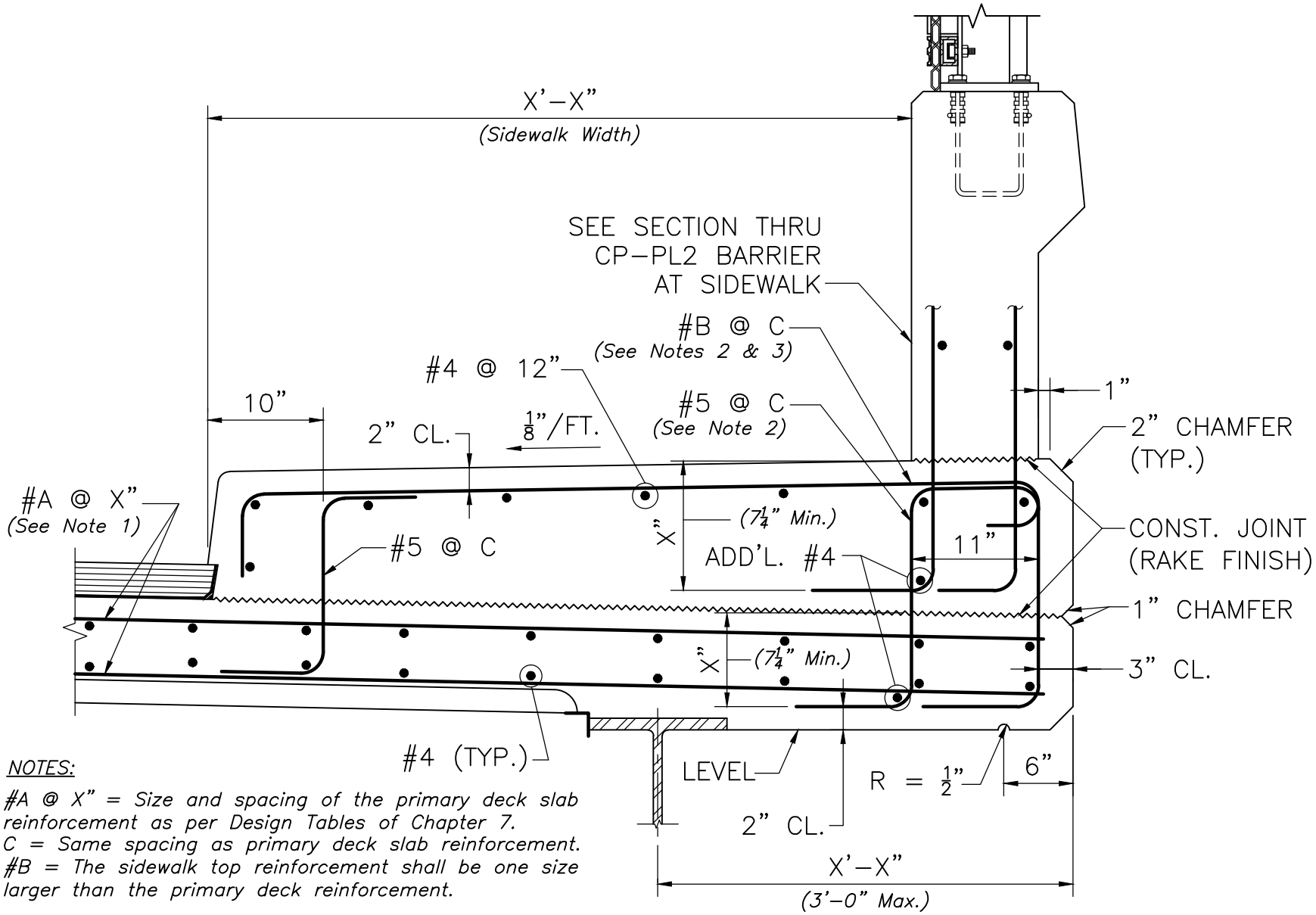

NOTES:

1. *#A @ X" = Size and spacing of the primary deck slab reinforcement as per Design Tables of Chapter 7.*
2. *C = Same spacing as primary deck slab reinforcement.*
3. *#B = The sidewalk top reinforcement shall be one size larger than the primary deck reinforcement.*

SECTION THRU SIDEWALK

SCALE: 1" = 1'–0"

massDOT Highway Division

LRFD BRIDGE MANUAL, PART II

SECTION THRU SIDEWALK
STRINGER BRIDGES

CP–PL2 BARRIER

DATE OF ISSUE
JUNE 2013

DRAWING NUMBER
9.4.4