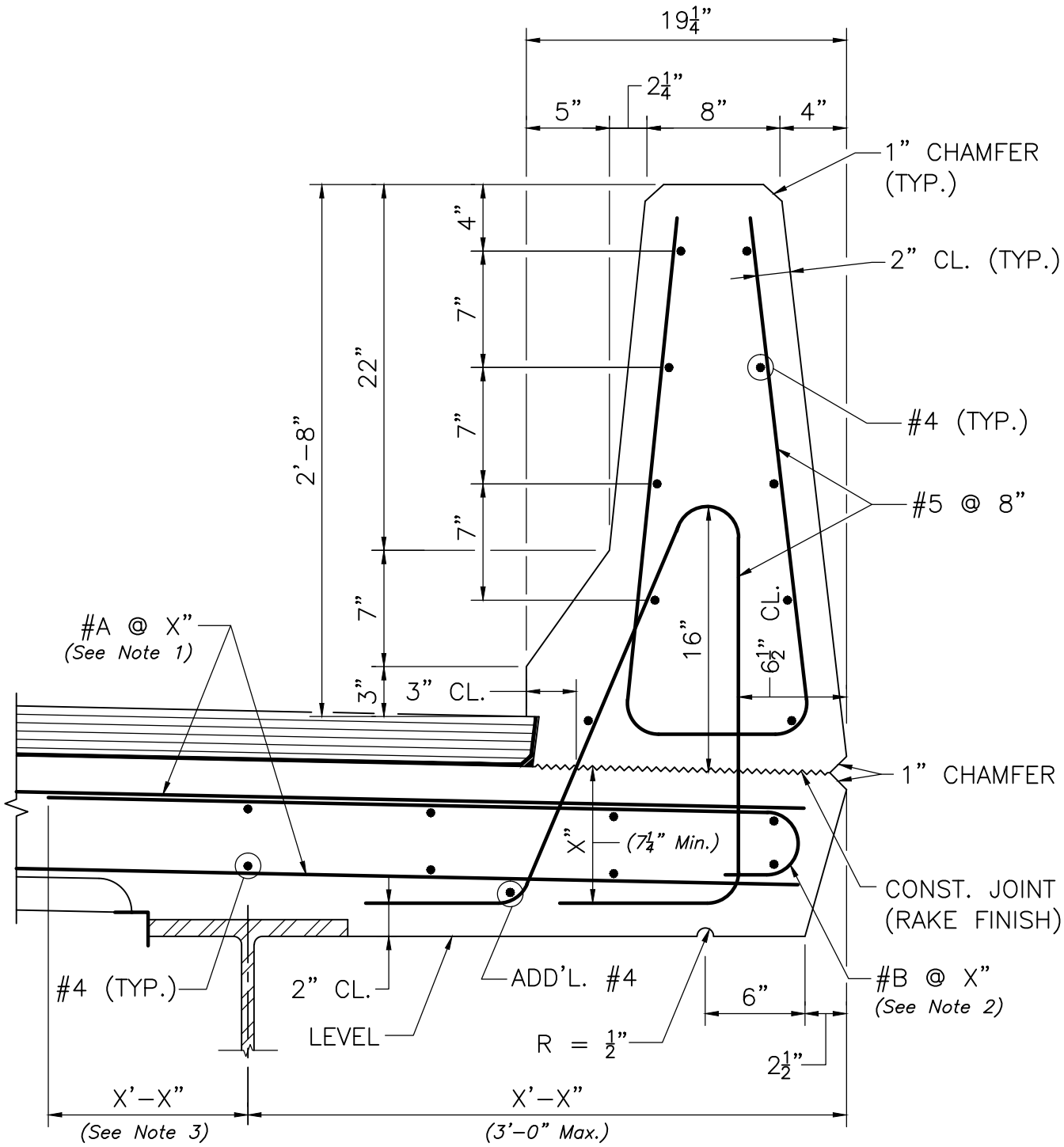

SECTION THRU BARRIER AND OVERHANG

SCALE: 1½" = 1'-0"

NOTES:

1. *#A @ X" = Size and spacing of the primary deck slab reinforcement as per Design Tables of Chapter 7.*
2. *#B @ X" = Size and spacing of the Additional Overhang Reinforcement as per Design Tables of Chapter 7.*
3. *Additional Overhang Reinforcement extension (Lext.) as per Design Tables of Chapter 7.*

massDOT Massachusetts Department of Transportation Highway Division LRFD BRIDGE MANUAL, PART II	SECTION THRU BARRIER AND OVERHANG, STRINGER BRIDGES CF-PL2 BARRIER	DATE OF ISSUE JUNE 2013 DRAWING NUMBER **9.5.1**