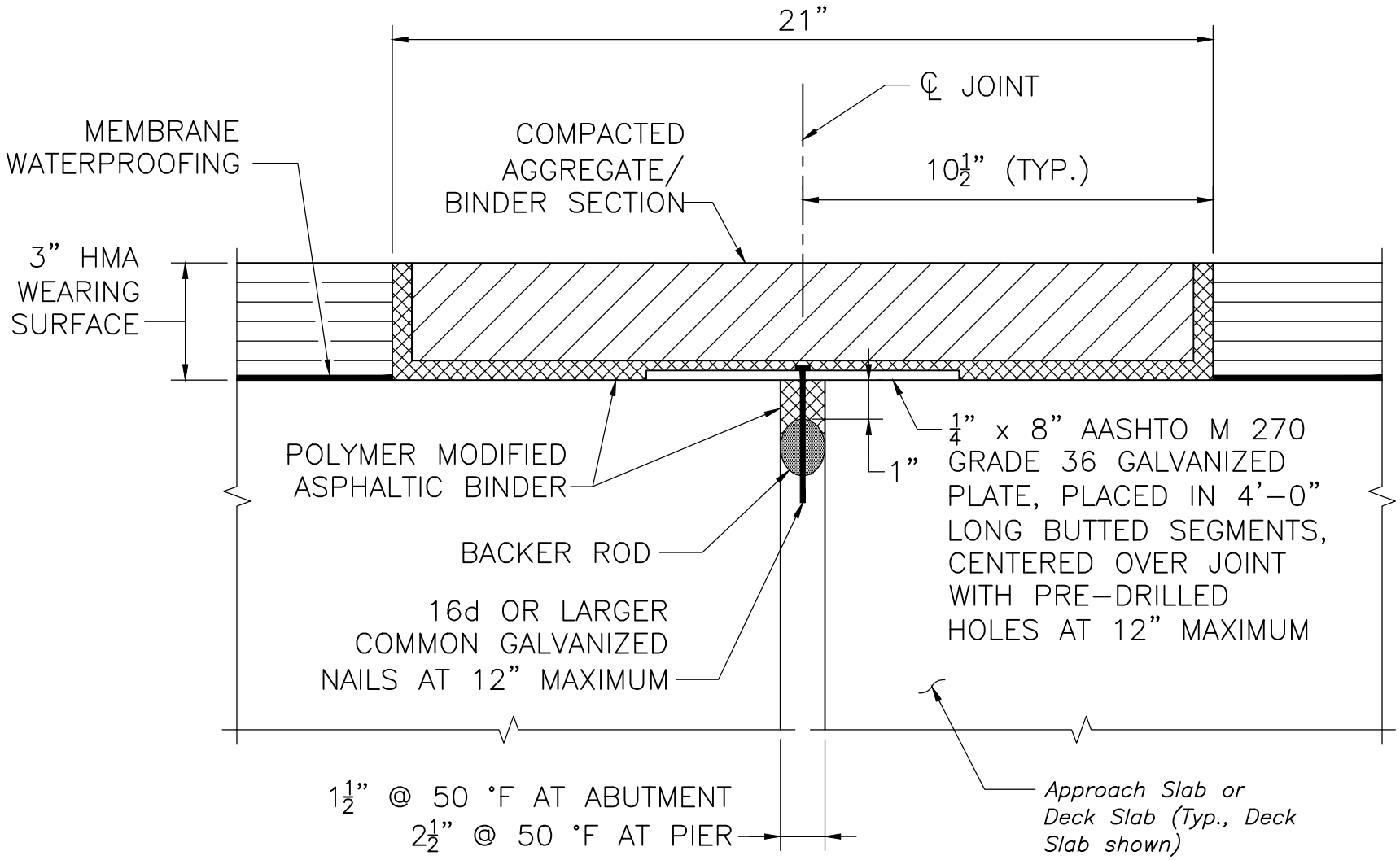

ASPHALTIC BRIDGE JOINT DETAIL

SCALE: 3" = 1'–0"

NOTES:

1. *Use of this joint is limited to a maximum of 1" of one way thermal movement or 30° maximum skew.*
2. *See Dwg. No. 10.1.3 for Construction Sequence Notes.*
3. *This detail must be used with deck drains. See Dwg. No. 7.3.1 for details.*

massDOT
LRFD BRIDGE MANUAL, PART II

TYPICAL JOINT DETAIL
HMA WEARING SURFACE

ASPHALTIC BRIDGE JOINT

DATE OF ISSUE
JUNE 2013

DRAWING NUMBER
10.1.1

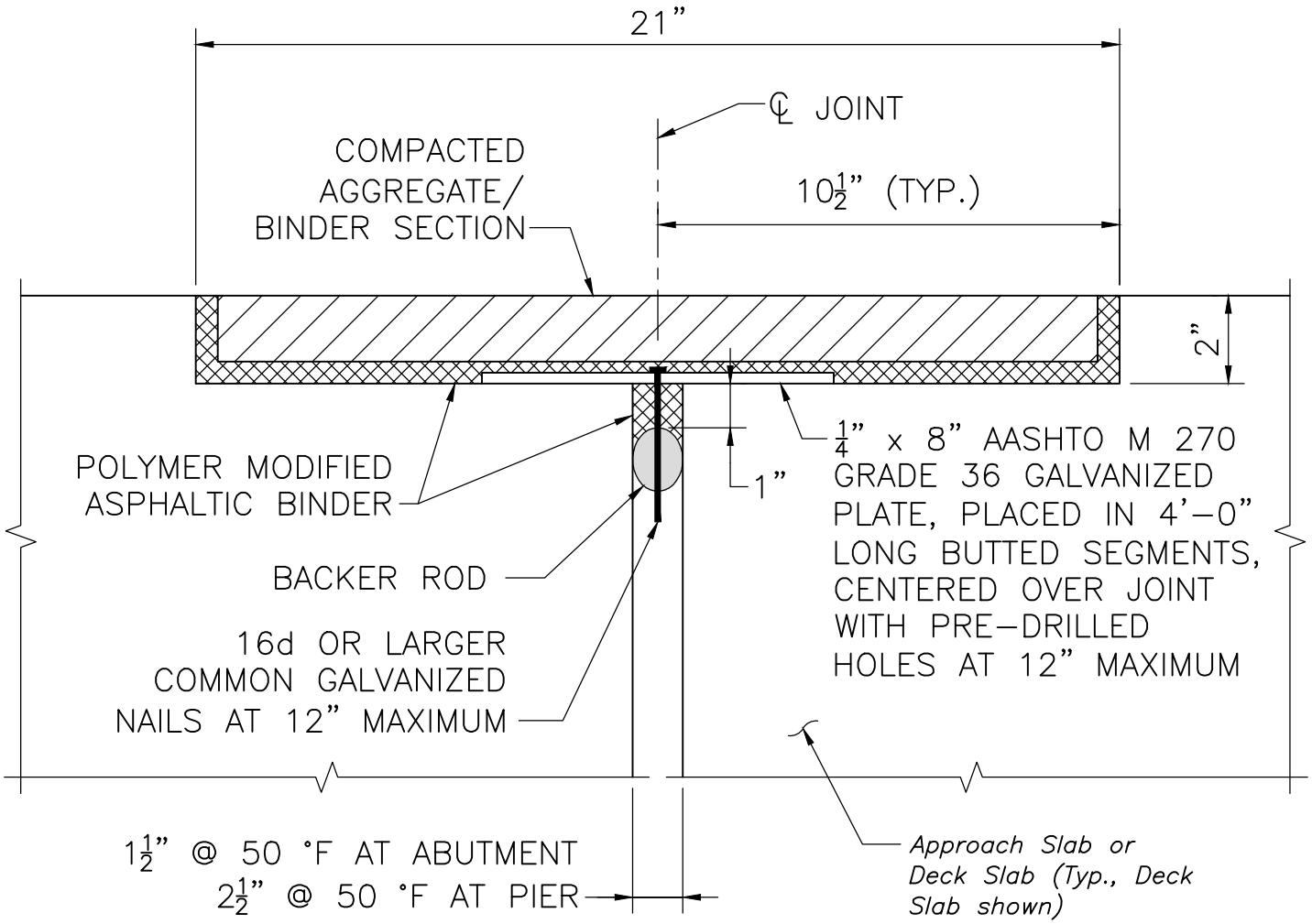

ASPHALTIC BRIDGE JOINT DETAIL

SCALE: 3" = 1'–0"

NOTES:

1. *Use of this joint is limited to a maximum of 1" of one way thermal movement or 30° maximum skew.*
2. *See Dwg. No. 10.1.3 for Construction Sequence Notes.*

massDOT Highway Division

LRFD BRIDGE MANUAL, PART II

TYPICAL JOINT DETAIL
EXPOSED CONCRETE DECKS

ASPHALTIC BRIDGE JOINT

DATE OF ISSUE
JUNE 2013

DRAWING NUMBER
10.1.2

CONSTRUCTION SEQUENCE NOTES:

(Use for Bridges with HMA Wearing Surface)

1. CENTER 19" WIDE STRIP OF ROOFING FELT OVER THE JOINT LOCATION.
2. PLACE WATERPROOFING MEMBRANE AND HMA WEARING SURFACE UNIFORMLY ACROSS THE DECK AND JOINT LOCATIONS.
3. SAW CUT AND REMOVE THE HMA WEARING SURFACE AND MEMBRANE WATERPROOFING TO THE LIMITS REQUIRED.
4. PLACE BACKER ROD, POLYMER MODIFIED BINDER AND STEEL PLATE SECURED IN PLACE WITH GALVANIZED NAILS.
5. COAT THE SURFACES OF THE BLOCK-OUT WITH THE POLYMER MODIFIED ASPHALTIC BINDER.
6. PLACE COMPACTED AGGREGATE/BINDER TO FILL ALL VOIDS AND OBTAIN A FINAL AND EVEN SURFACE WITH THE ADJACENT WEARING SURFACE.
7. IT IS NOT NECESSARY TO CONSTRUCT THE JOINT AT MEAN TEMPERATURE, HOWEVER, THE MANUFACTURER SHOULD BE CONSULTED FOR INSTALLATION GUIDELINES FOR EXTREME CLIMATE CONDITIONS.

CONSTRUCTION SEQUENCE NOTES:

(Use for Bridges with Exposed Concrete Deck)

1. MAINTAIN THE REQUIRED BLOCK-OUT WHILE PLACING CONCRETE.
2. CLEAN THE BLOCK OUT TO REMOVE DELETERIOUS AND FOREIGN MATERIALS.
3. PLACE BACKER ROD, POLYMER MODIFIED BINDER AND STEEL PLATE SECURED IN PLACE WITH GALVANIZED NAILS.
4. COAT THE SURFACES OF THE BLOCK-OUT WITH THE POLYMER MODIFIED ASPHALTIC BINDER.
5. PLACE COMPACTED AGGREGATE/BINDER TO FILL ALL VOIDS AND OBTAIN A FINAL AND EVEN SURFACE WITH THE ADJACENT WEARING SURFACE.
6. IT IS NOT NECESSARY TO CONSTRUCT THE JOINT AT MEAN TEMPERATURE, HOWEVER, THE MANUFACTURER SHOULD BE CONSULTED FOR INSTALLATION GUIDELINES FOR EXTREME CLIMATE CONDITIONS.

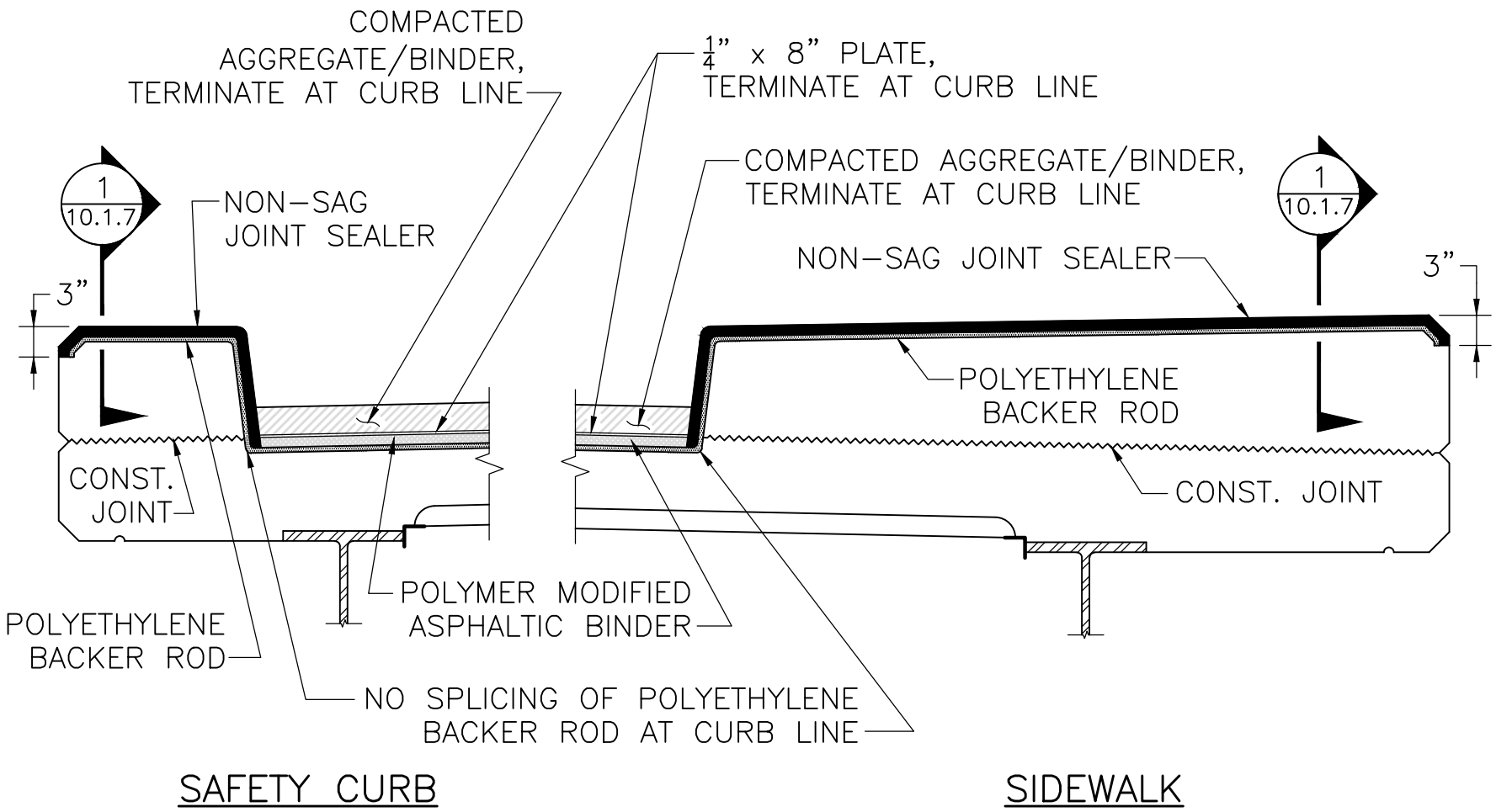

JOINT DETAIL AT S3-TL4 RAILING

SCALE: $\frac{3}{4}$" = 1'-0"

NOTE:

Modify drawing to show actual beam type.

massDOT Massachusetts Department of Transportation

LRFD BRIDGE MANUAL, PART II

JOINT DETAILS
S3-TL4 RAILING

ASPHALTIC BRIDGE JOINT

DATE OF ISSUE
JUNE 2013

DRAWING NUMBER
10.1.4

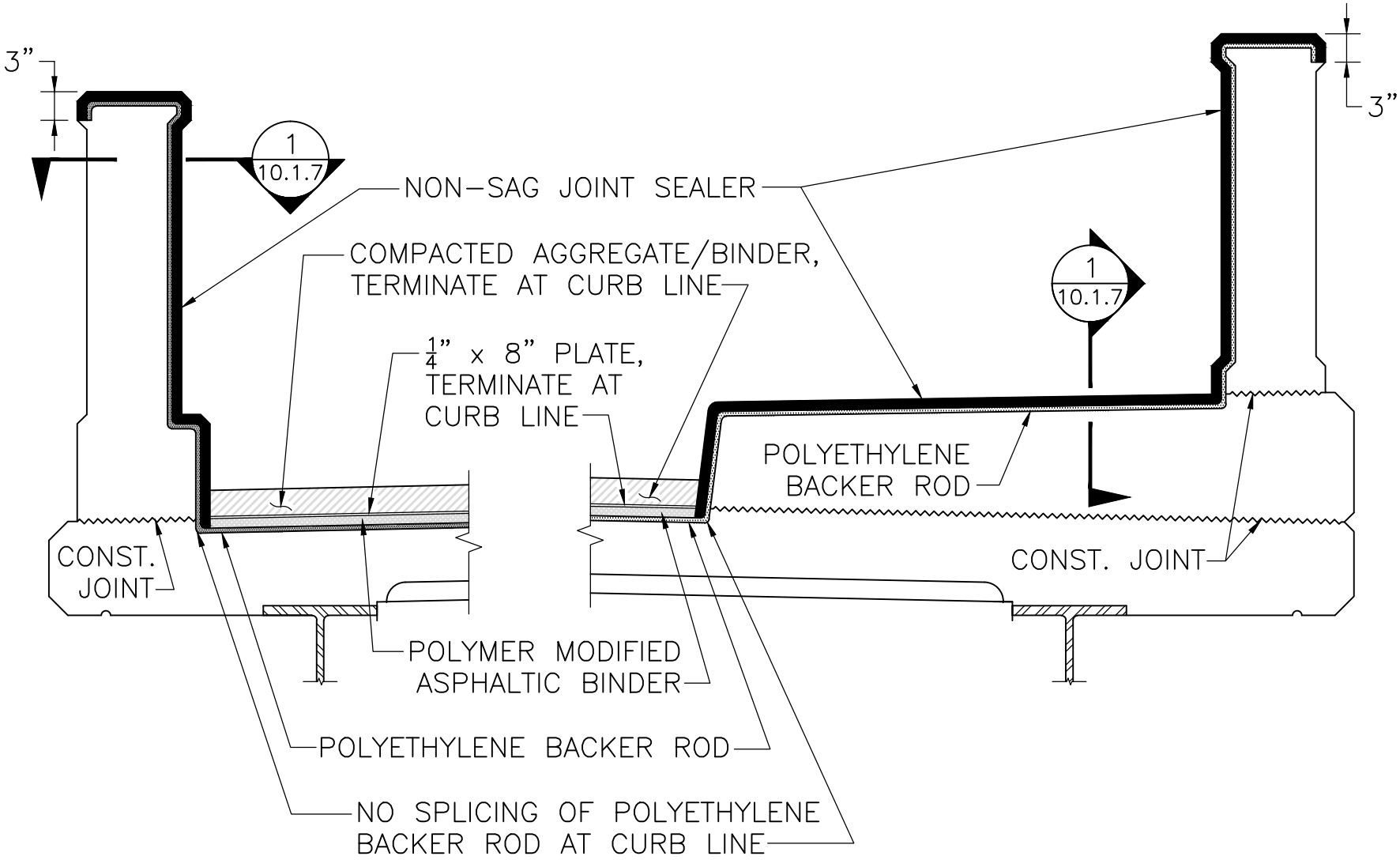

SAFETY CURB

SIDEWALK

JOINT DETAIL AT CT-TL2 BARRIER

SCALE: $\frac{3}{4}$" = 1'-0"

NOTE:

Modify drawing to show actual beam type.

massDOT Highway Division

LRFD BRIDGE MANUAL, PART II

JOINT DETAILS
CT-TL2 BARRIER

ASPHALTIC BRIDGE JOINT

DATE OF ISSUE
JUNE 2013

DRAWING NUMBER
10.1.5

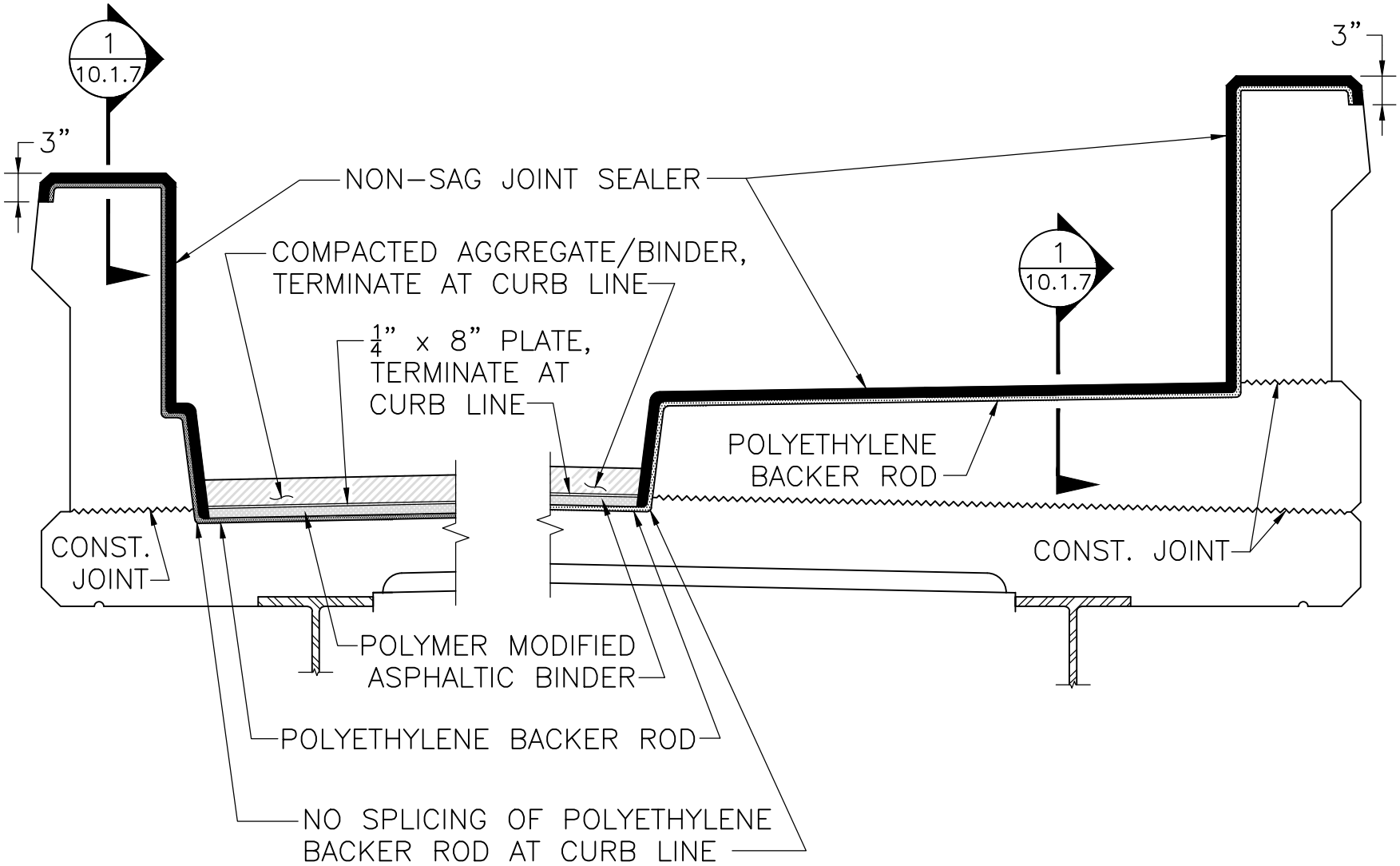

JOINT DETAIL AT CP-PL2 BARRIER

SCALE: $\frac{3}{4}$" = 1'-0"

NOTE:

Modify drawing to show actual beam type.

massDOT Highway Division

LRFD BRIDGE MANUAL, PART II

JOINT DETAILS
CP-PL2 BARRIER

ASPHALTIC BRIDGE JOINT

DATE OF ISSUE
JUNE 2013

DRAWING NUMBER
10.1.6

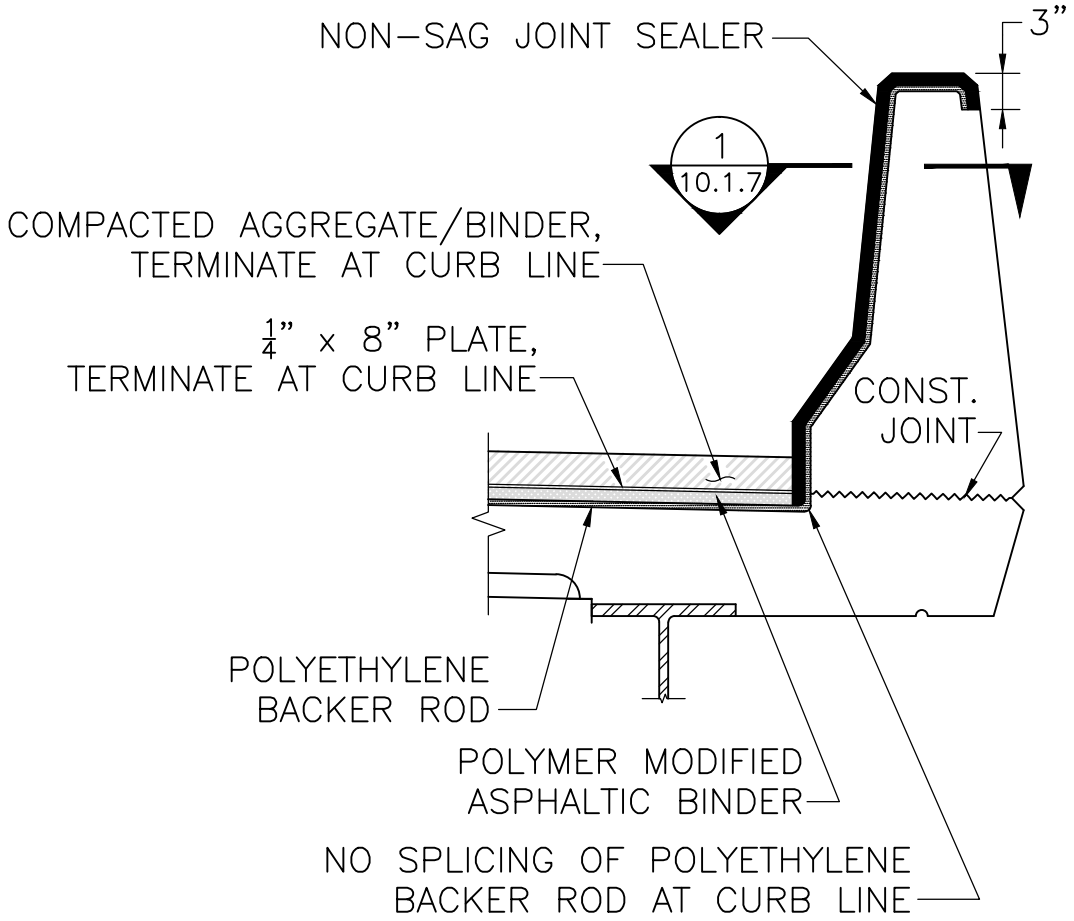

JOINT DETAIL AT CF BARRIERS

SCALE: ¾" = 1'–0"

NOTE:

Modify drawing to show actual beam type.

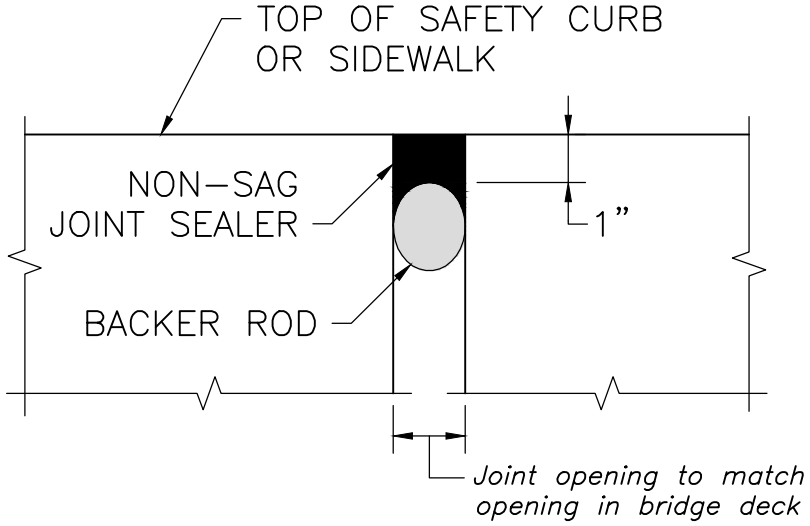

SECTION 1

SCALE: 3" = 1'–0"

massDOT Massachusetts Department of Transportation Highway Division LRFD BRIDGE MANUAL, PART II	JOINT DETAILS CF BARRIERS ASPHALTIC BRIDGE JOINT	DATE OF ISSUE JUNE 2013 DRAWING NUMBER **10.1.7**

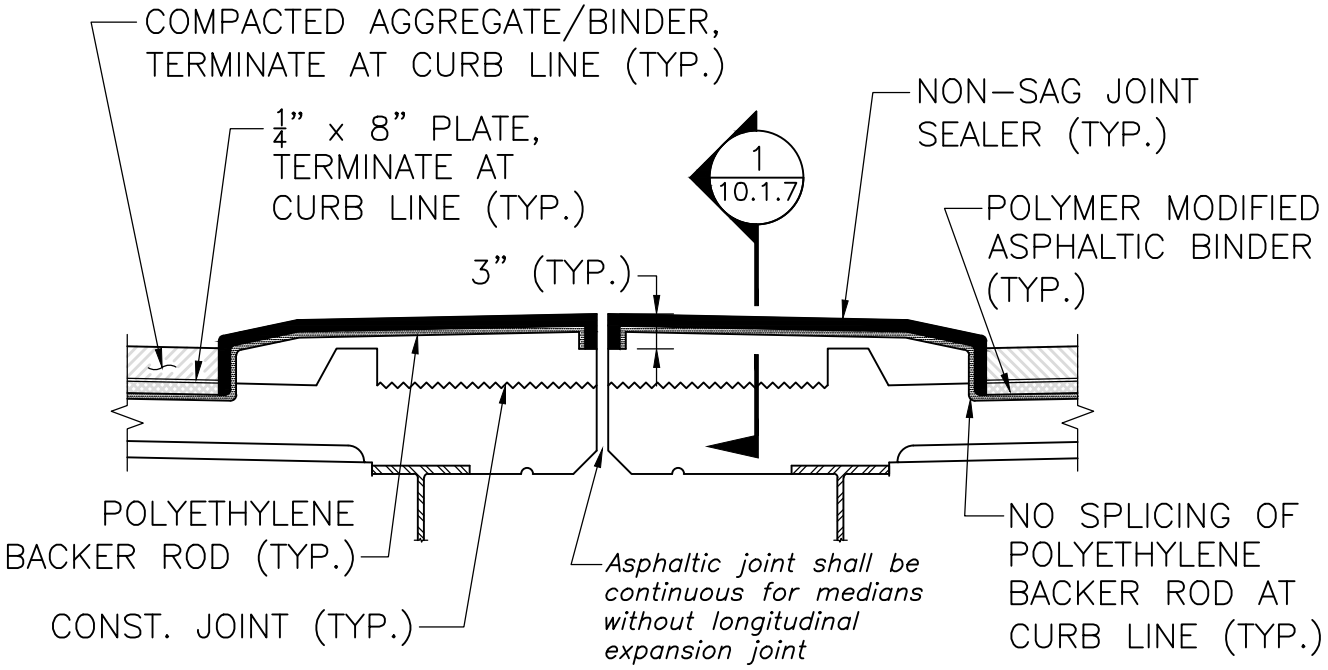

(MEDIANS WITHOUT APPROACH CURB)

DETAIL AT MEDIAN

SCALE: $\frac{3}{4}$" = 1'-0"

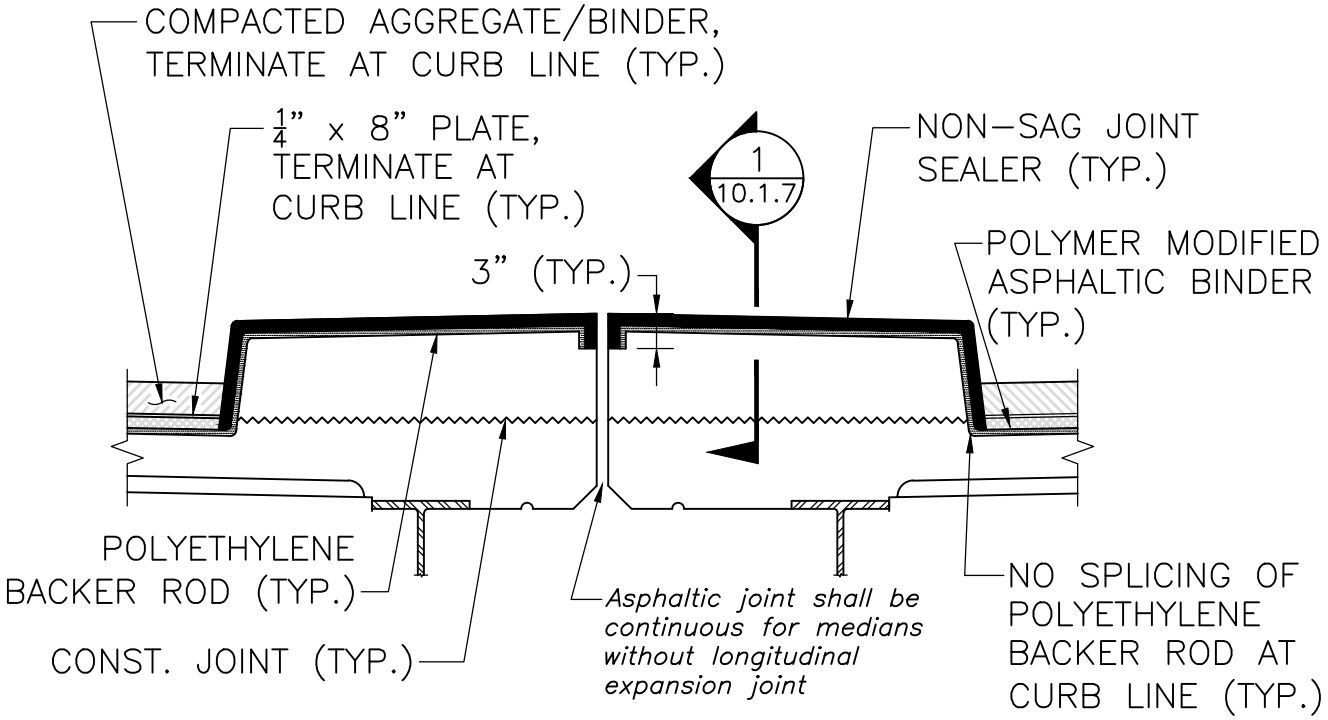

(MEDIANS WITH APPROACH CURB)

DETAIL AT MEDIAN

SCALE: $\frac{3}{4}$" = 1'-0"

NOTE:
Modify drawing to show actual beam type.

massDOT Massachusetts Department of Transportation Highway Division

LRFD BRIDGE MANUAL, PART II

JOINT DETAIL AT MEDIAN

ASPHALTIC BRIDGE JOINT

DATE OF ISSUE
JUNE 2013

DRAWING NUMBER
10.1.8

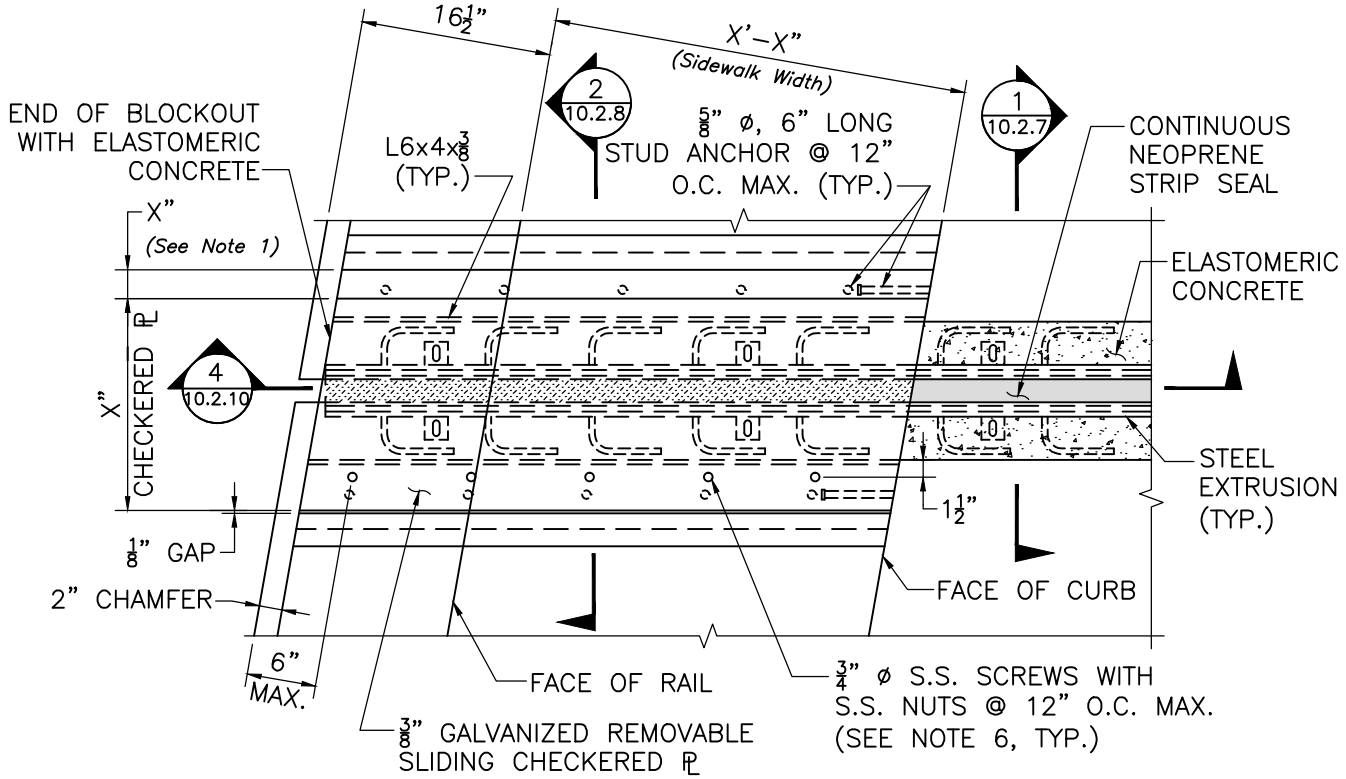

PLAN – STRIP SEAL JOINT AT SIDEWALK

SCALE: 1" = 1'–0"

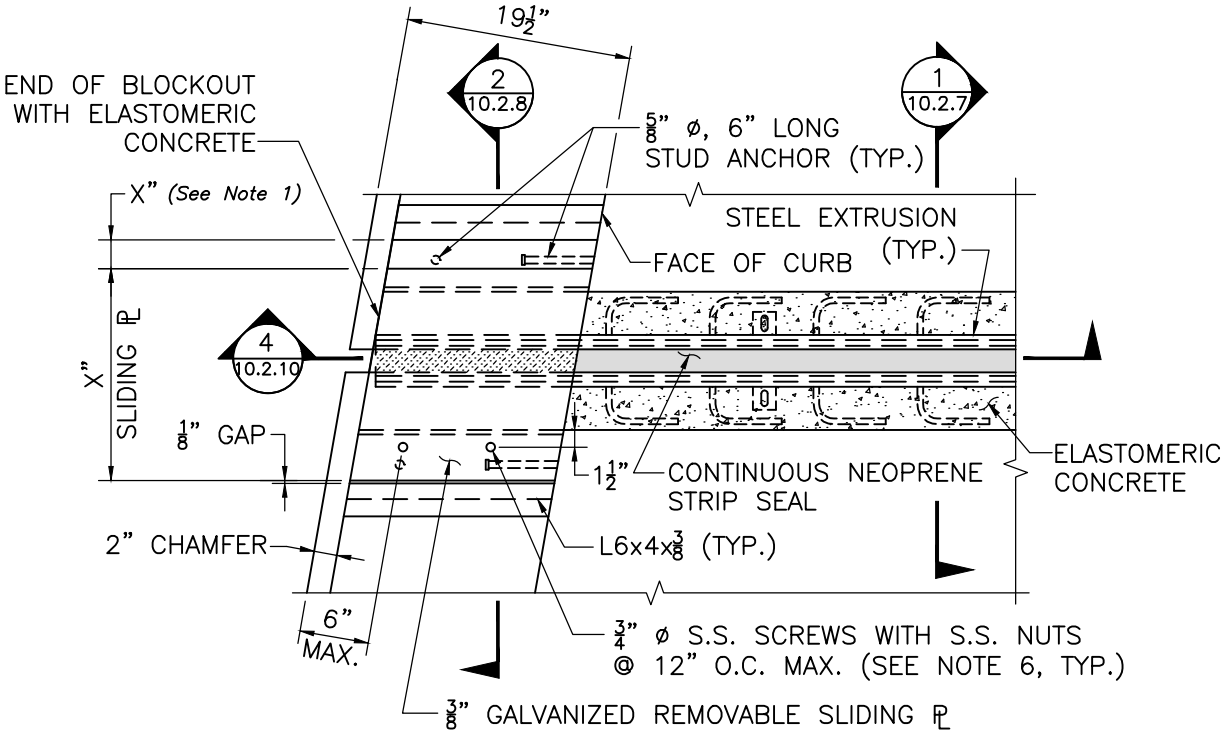

PLAN – STRIP SEAL JOINT AT SAFETY CURB

SCALE: 1" = 1'–0"

NOTES:

1. *X" = (Joint Width + ½")*
2. *See Dwg. No. 10.2.16 for Construction Notes to be placed on Construction Drawings.*

massDOT Massachusetts Department of Transportation Highway Division

LRFD BRIDGE MANUAL, PART II

S3–TL4 RAILING PLAN, SKEW ⩽ 35°

STRIP SEAL JOINT DETAILS

DATE OF ISSUE
JUNE 2013

DRAWING NUMBER
10.2.1

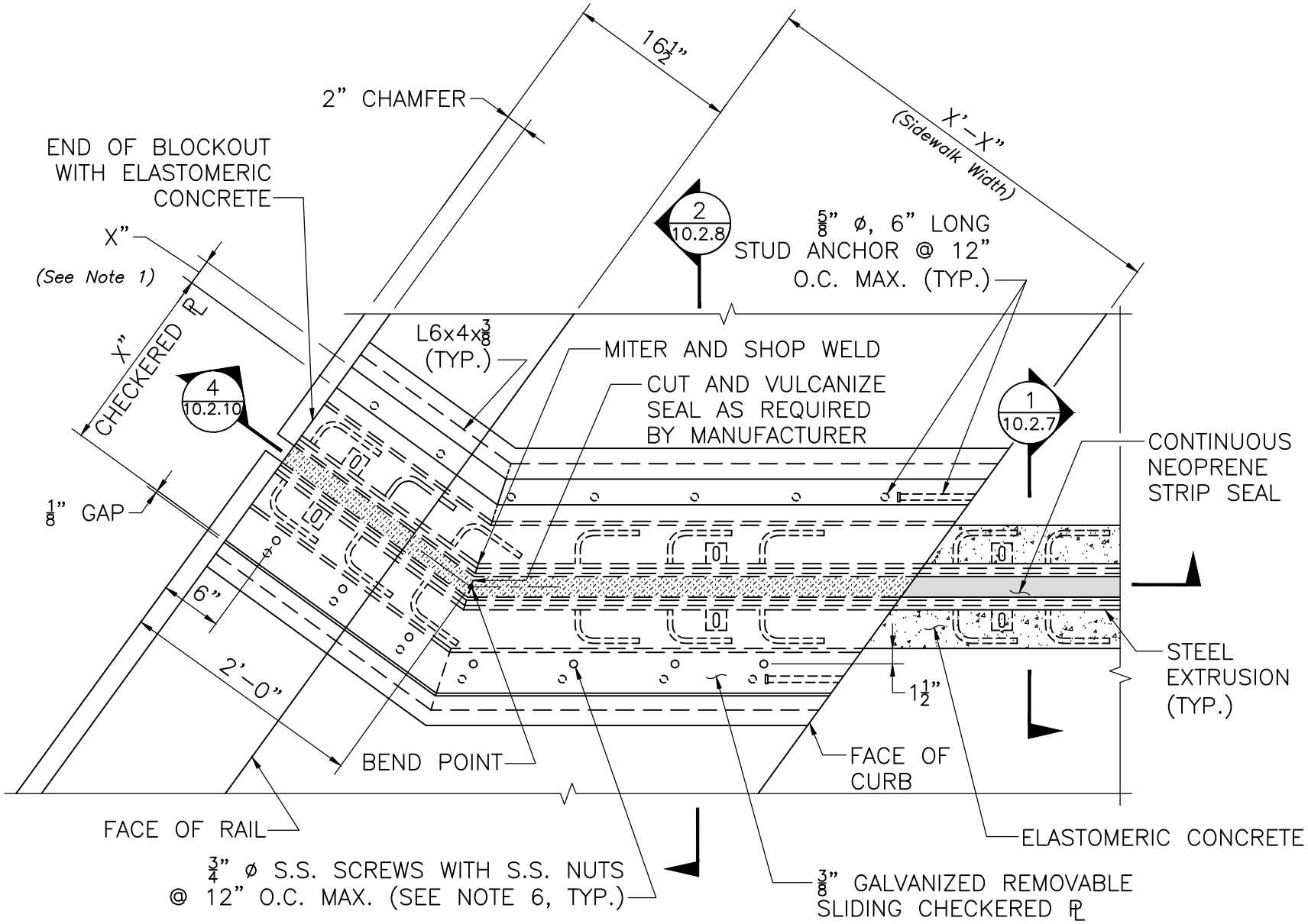

PLAN – STRIP SEAL JOINT AT SIDEWALK

SCALE: 1" = 1'-0"

NOTES:

1. *X" = (Joint Width + ½")*
2. *See Dwg. No. 10.2.16 for Construction Notes to be placed on Construction Drawings.*

massDOT Massachusetts Department of Transportation Highway Division

LRFD BRIDGE MANUAL, PART II

S3-TL4 RAILING AT SIDEWALK
PLAN, SKEW > 35°

STRIP SEAL JOINT DETAILS

DATE OF ISSUE
JUNE 2013

DRAWING NUMBER
10.2.2

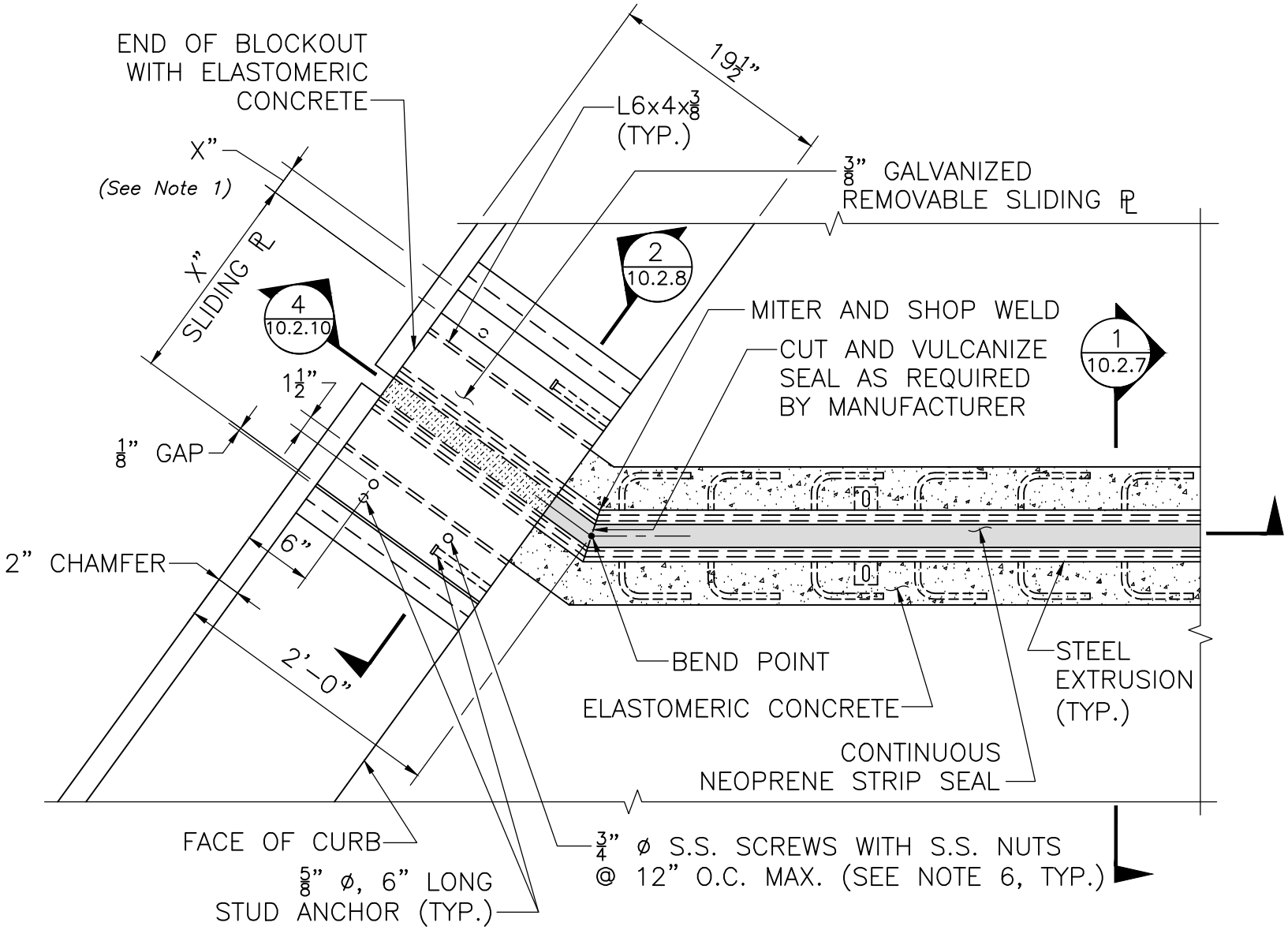

PLAN – STRIP SEAL JOINT AT SAFETY CURB

SCALE: 1" = 1'–0"

NOTES:

1. *X" = (Joint Width + ½")*
2. *See Dwg. No. 10.2.16 for Construction Notes to be placed on Construction Drawings.*

massDOT Highway Division

LRFD BRIDGE MANUAL, PART II

S3–TL4 RAILING AT SAFETY CURB PLAN, SKEW > 35°

STRIP SEAL JOINT DETAILS

DATE OF ISSUE JUNE 2013

DRAWING NUMBER **10.2.3**

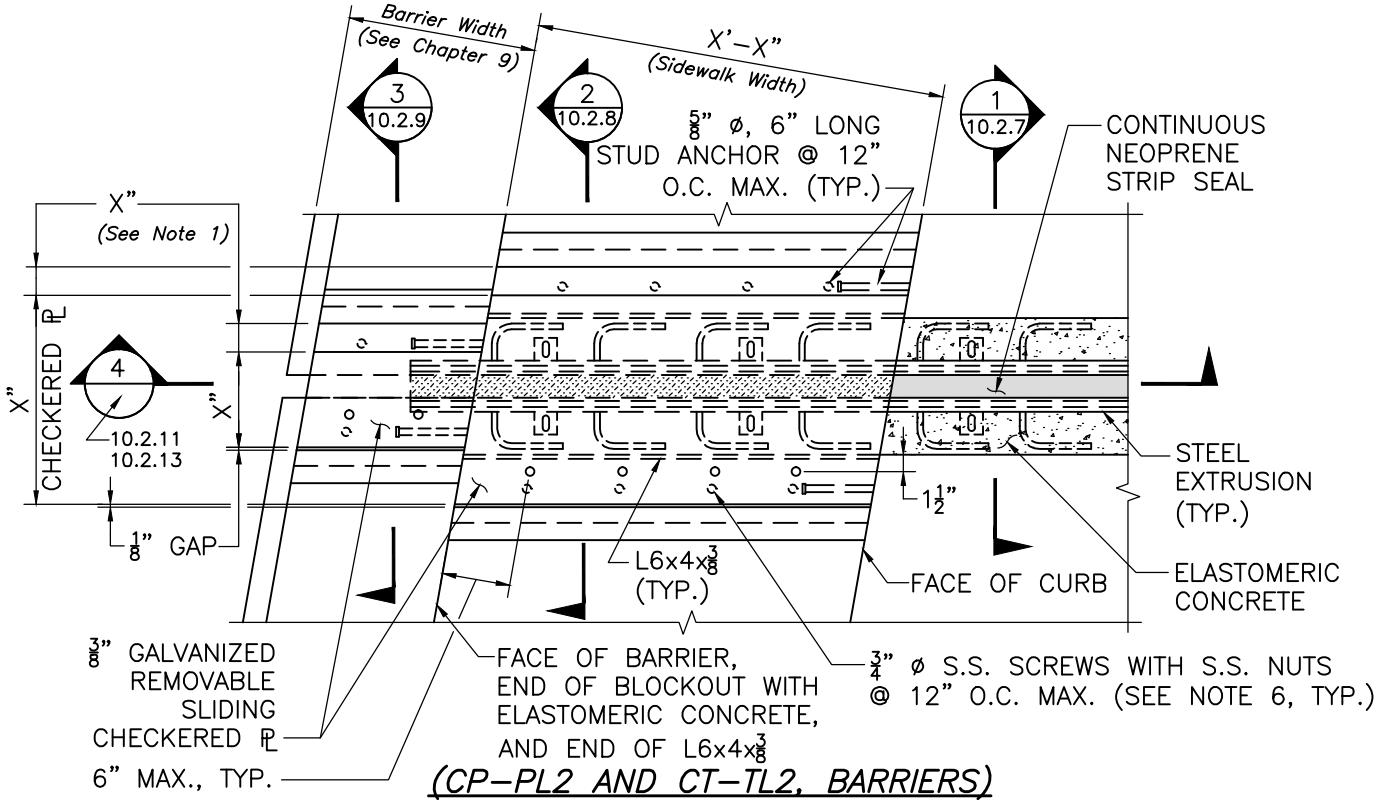

(CP-PL2 AND CT-TL2, BARRIERS)

PLAN – STRIP SEAL JOINT AT SIDEWALK

SCALE: 1" = 1'-0"

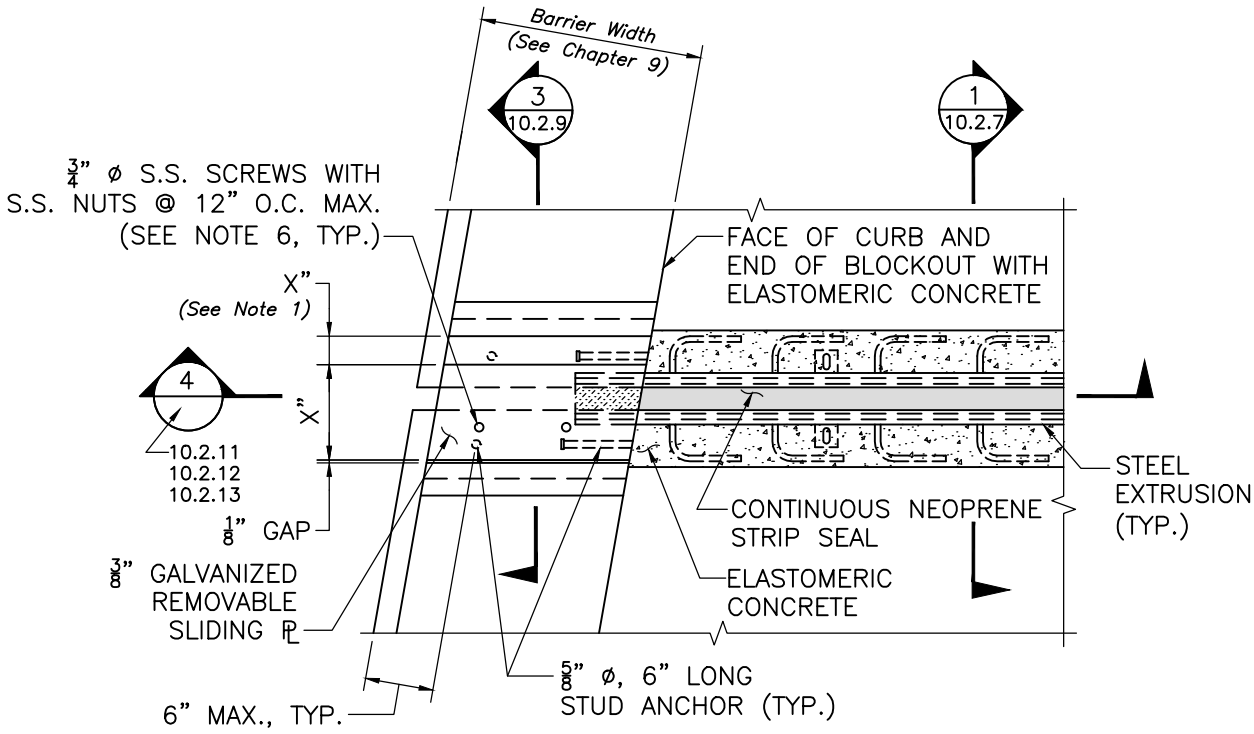

(CP-PL2, CT-TL2, CF-PL2 AND CF-PL3 BARRIERS)

PLAN – STRIP SEAL JOINT AT SAFETY CURB

SCALE: 1" = 1'-0"

NOTES:

1. *X" = (Joint Width + 1/2")*
2. *See Dwg. No. 10.2.16 for Construction Notes to be placed on Construction Drawings.*

massDOT Massachusetts Department of Transportation Highway Division LRFD BRIDGE MANUAL, PART II	BARRIERS PLAN, SKEW ≤ 35° STRIP SEAL JOINT DETAILS	DATE OF ISSUE JUNE 2013 DRAWING NUMBER **10.2.4**

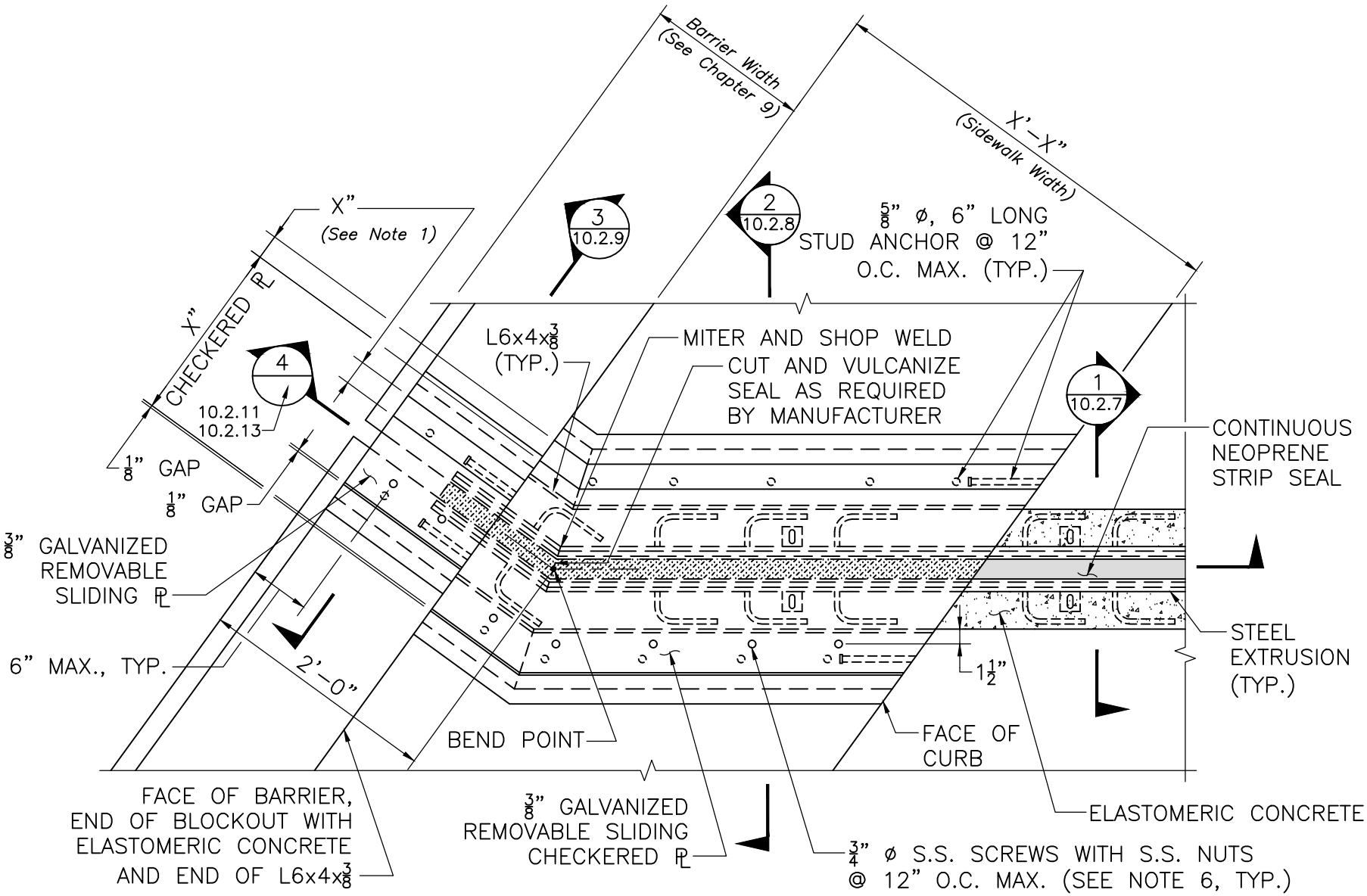

PLAN – STRIP SEAL JOINT AT SIDEWALK

SCALE: 1" = 1'–0"

NOTES:

1. *X" = (Joint Width + 1/2")*
2. *See Dwg. No. 10.2.16 for Construction Notes to be placed on Construction Drawings.*

massDOT Highway Division

LRFD BRIDGE MANUAL, PART II

CP AND CT BARRIERS AT SDWK. PLAN, SKEW > 35°

STRIP SEAL JOINT DETAILS

DATE OF ISSUE
JUNE 2013

DRAWING NUMBER
10.2.5

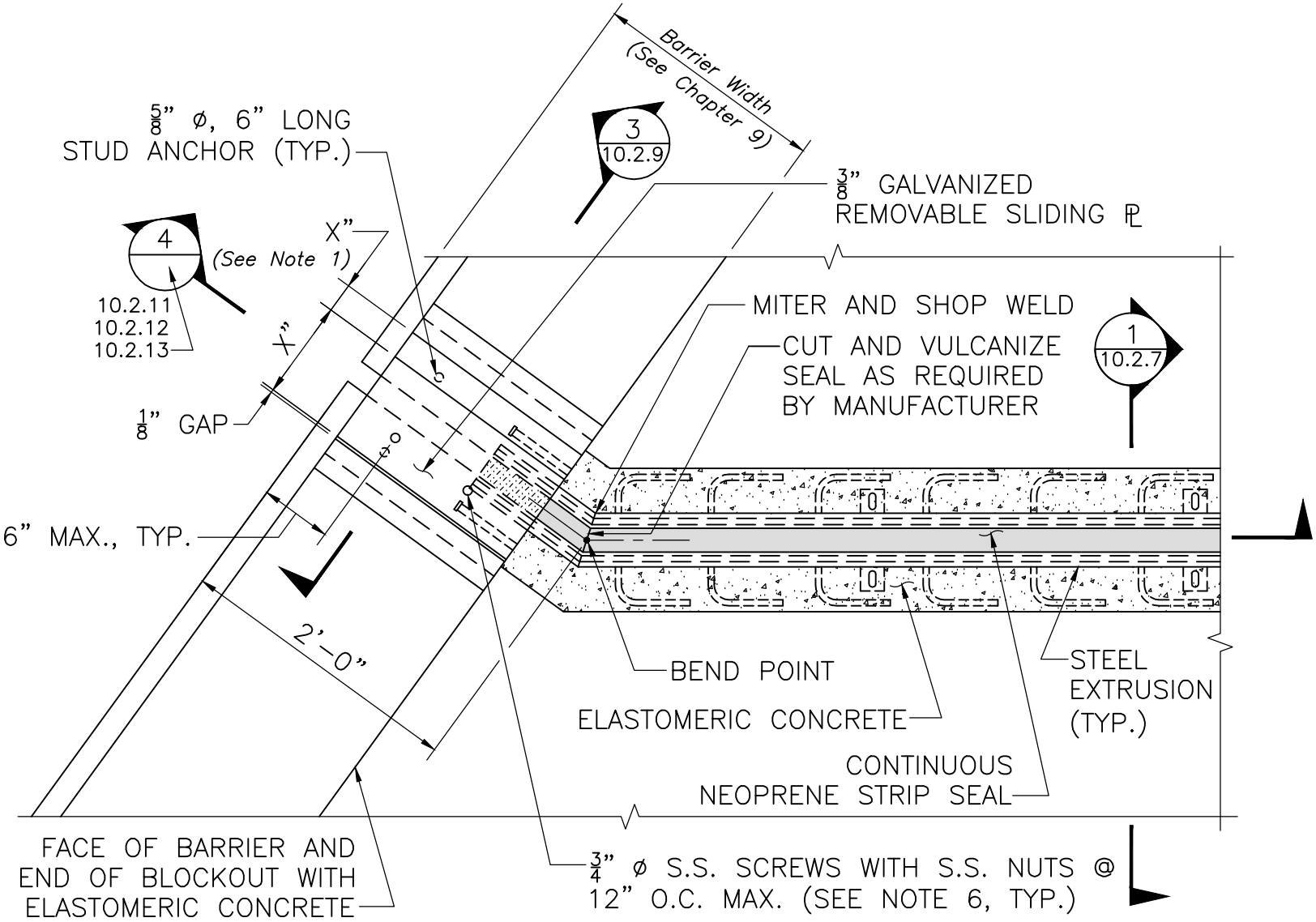

PLAN – STRIP SEAL JOINT AT SAFETY CURB

SCALE: 1" = 1'–0"

NOTES:

1. *X" = (Joint Width + 1/2")*
2. *See Dwg. No. 10.2.16 for Construction Notes to be placed on Construction Drawings.*

massDOT
LRFD BRIDGE
MANUAL, PART II

BARRIERS AT SAFETY CURB
PLAN, SKEW > 35°
STRIP SEAL JOINT DETAILS

DATE OF ISSUE
JUNE 2013

DRAWING NUMBER
10.2.6

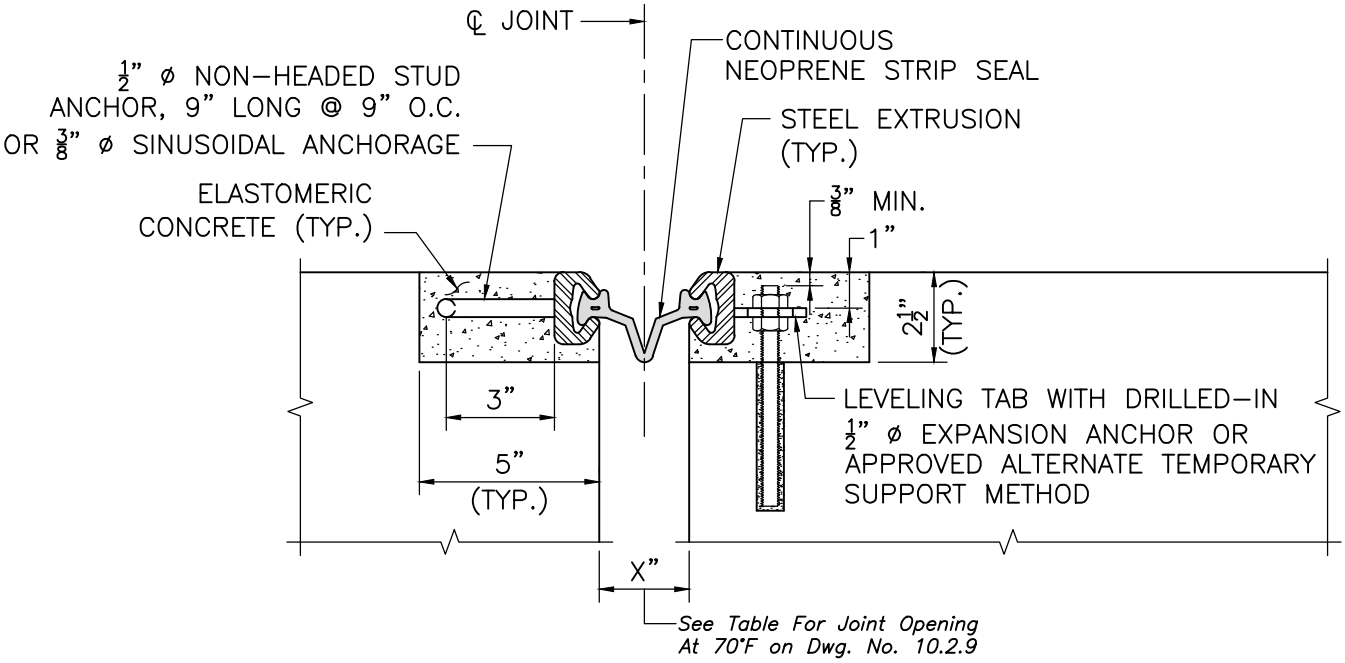

AT ANCHOR LOCATION AT TEMPORARY SUPPORT LOCATION

SECTION 1

SCALE: 3" = 1'-0"

(EXPOSED CONCRETE DECKS)

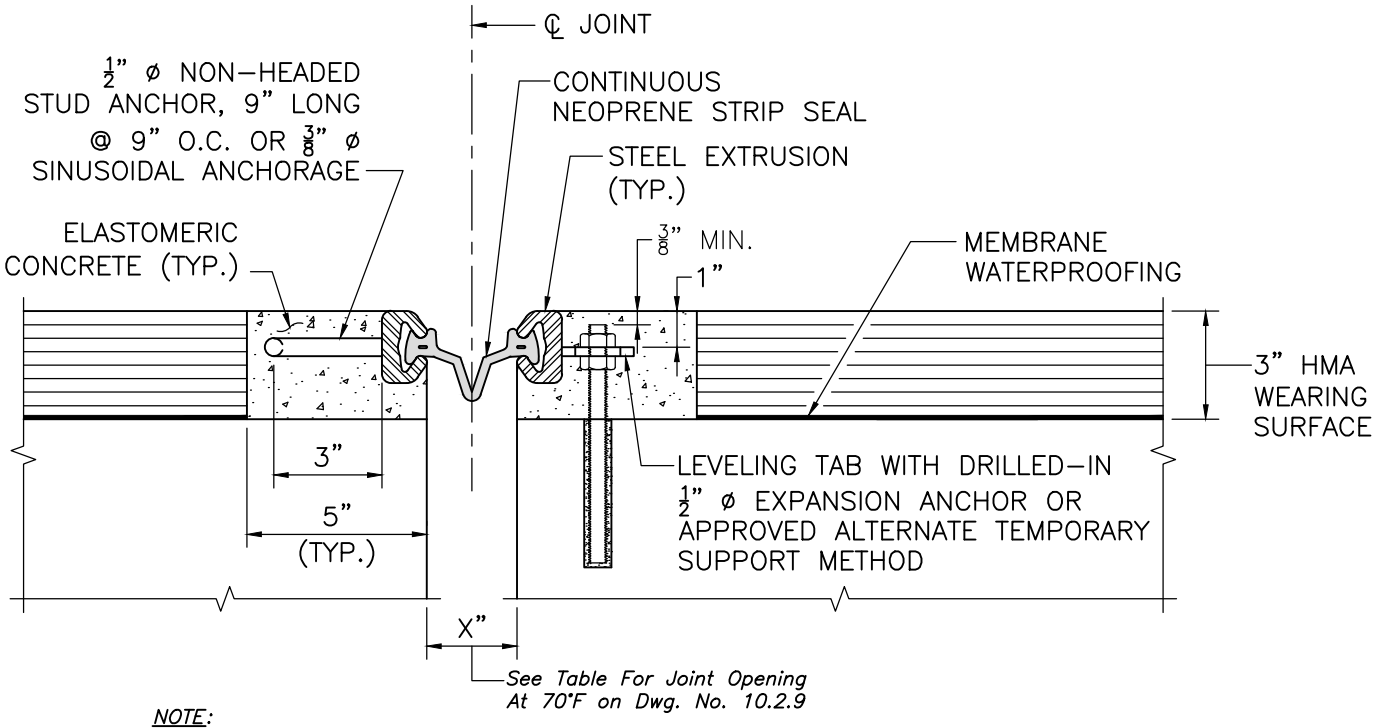

NOTE:
This detail must be used with deck drains. See Dwg. No. 7.3.1 for details.

AT ANCHOR LOCATION AT TEMPORARY SUPPORT LOCATION

SECTION 1

SCALE: 3" = 1'-0"

(DECKS WITH HMA WEARING SURFACE)

NOTE:
See Dwg. No. 10.2.16 for Construction Notes to be placed on Construction Drawings.

massDOT Massachusetts Department of Transportation Highway Division

LRFD BRIDGE MANUAL, PART II

TRANSVERSE SECTION THRU ROADWAY

STRIP SEAL JOINT DETAILS

DATE OF ISSUE
JUNE 2013

DRAWING NUMBER
10.2.7

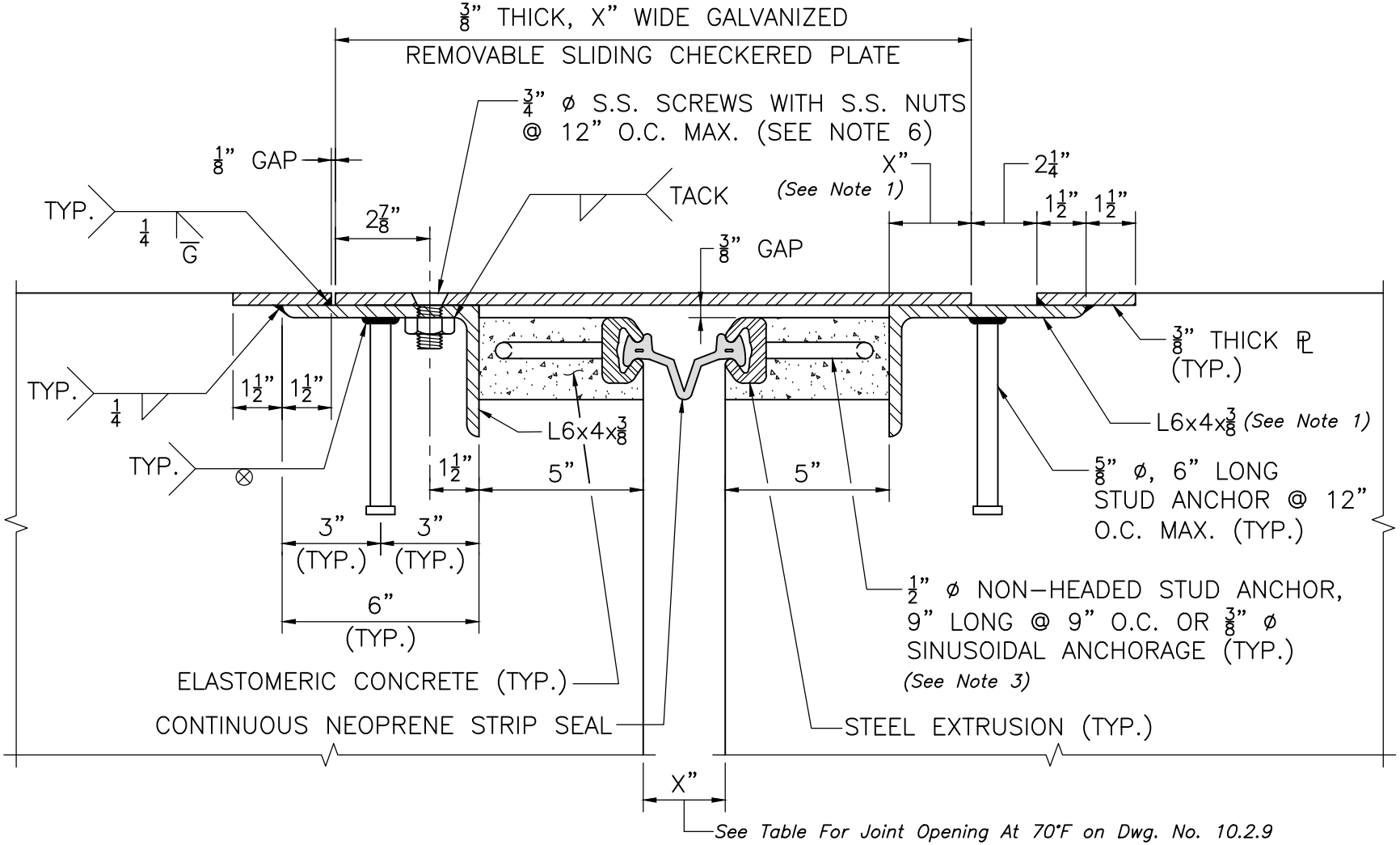

SECTION 2

SCALE: 3" = 1'-0"

NOTES:

1. *For steel and concrete bridges with span length of up to 190' and 270' respectively, this dimension shall be taken as 2 1/4". For bridges with longer spans this dimension shall be taken as thermal movement due to the temperature fall as per Part I, Paragraph 3.7.1 of the Bridge Manual, plus 3/4". In such cases, an angle with a longer horizontal leg shall be provided to accommodate total calculated dimension.*
2. *The stud anchor or sinusoidal anchorage shall be omitted at Safety Curb.*
3. *See Dwg. No. 10.2.16 for Construction Notes to be placed on Construction Drawings.*

massDOT Highway Division

LRFD BRIDGE MANUAL, PART II

TRANSVERSE SECTION THRU SIDEWALK

STRIP SEAL JOINT DETAILS

DATE OF ISSUE
JUNE 2013

DRAWING NUMBER
10.2.8

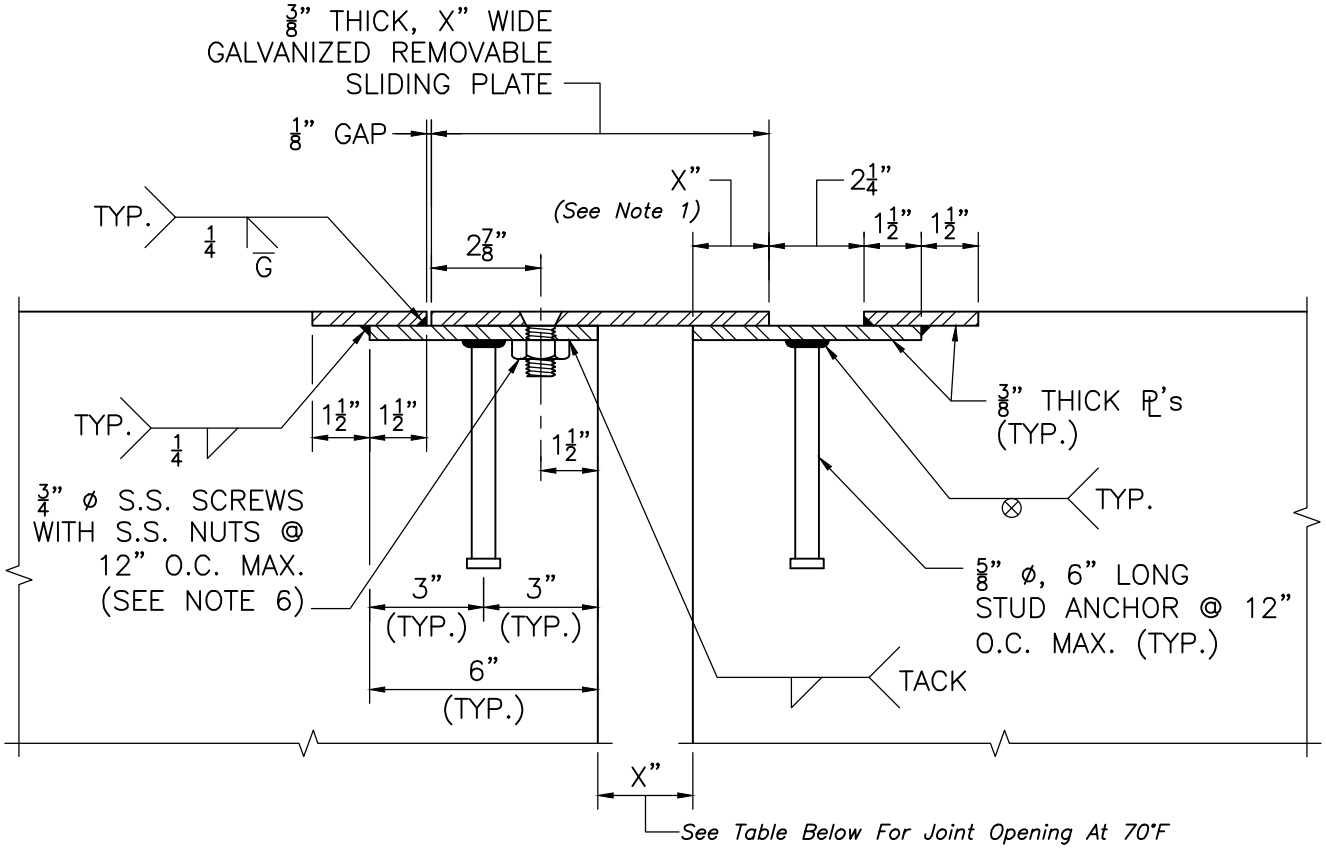

SECTION 3

SCALE: 3" = 1'–0"

NOTES:

1. *For steel and concrete bridges with span length of up to 190' and 270' respectively, this dimension shall be taken as 2 1/4". For bridges with longer spans this dimension shall be taken as thermal movement due to the temperature fall as per Part I, Paragraph 3.7.1 of the Bridge Manual, plus 3/4".*
2. *See Dwg. No. 10.2.16 for Construction Notes to be placed on Construction Drawings.*

ACCEPTABLE STRIP SEAL JOINTS			
MANUFACTURER	STEEL EXTRUSION MODEL	NEOPRENE STRIP SEAL MODEL	JOINT OPENING @ 70°F
WATSON BOWMAN ACME	TYPE A	SE–400	1 3/4"
D.S. BROWN	TYPE SSA2	A2R–400	1 3/4"

massDOT Massachusetts Department of Transportation Highway Division

LRFD BRIDGE MANUAL, PART II

TRANSVERSE SECTION THRU SIDEWALK AND TABLE

STRIP SEAL JOINT DETAILS

DATE OF ISSUE JUNE 2013

DRAWING NUMBER **10.2.9**

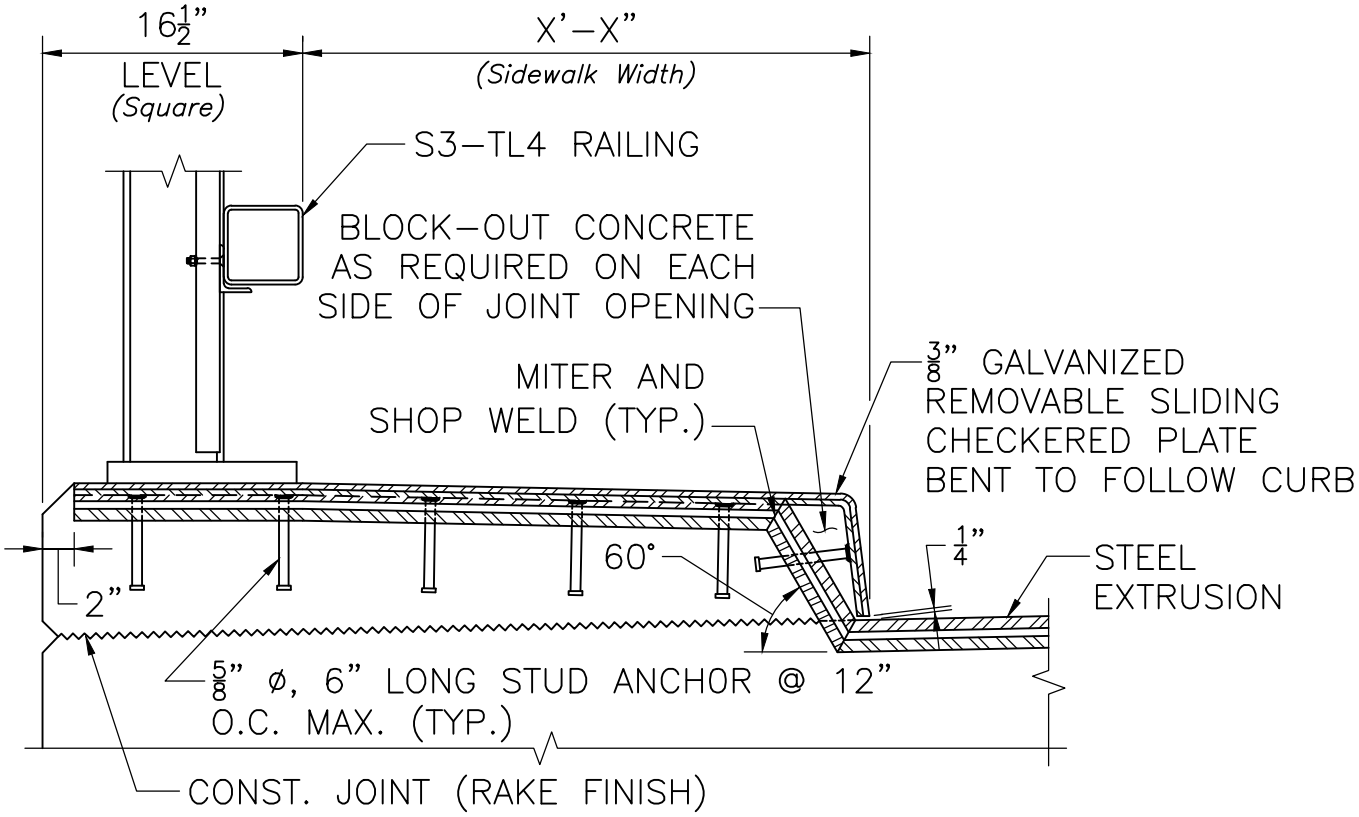

(THRU SIDEWALK)
SECTION 4
SCALE: 1" = 1'–0"

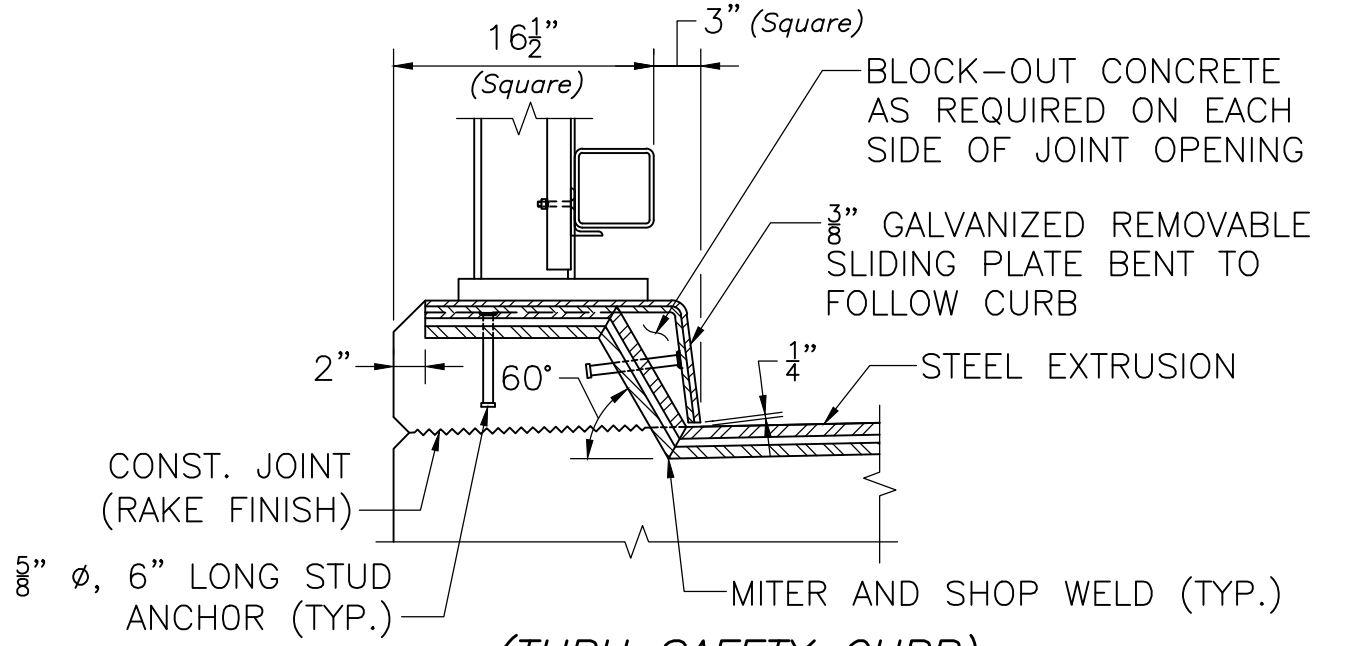

(THRU SAFETY CURB)
SECTION 4
SCALE: 1" = 1'–0"

NOTE:

See Dwg. No. 10.2.16 for Construction Notes to be placed on Construction Drawings.

massDOT Massachusetts Department of Transportation Highway Division

LRFD BRIDGE MANUAL, PART II

LONGITUDINAL SECTIONS S3–TL4 RAILING

STRIP SEAL JOINT DETAILS

DATE OF ISSUE
JUNE 2013

DRAWING NUMBER
10.2.10

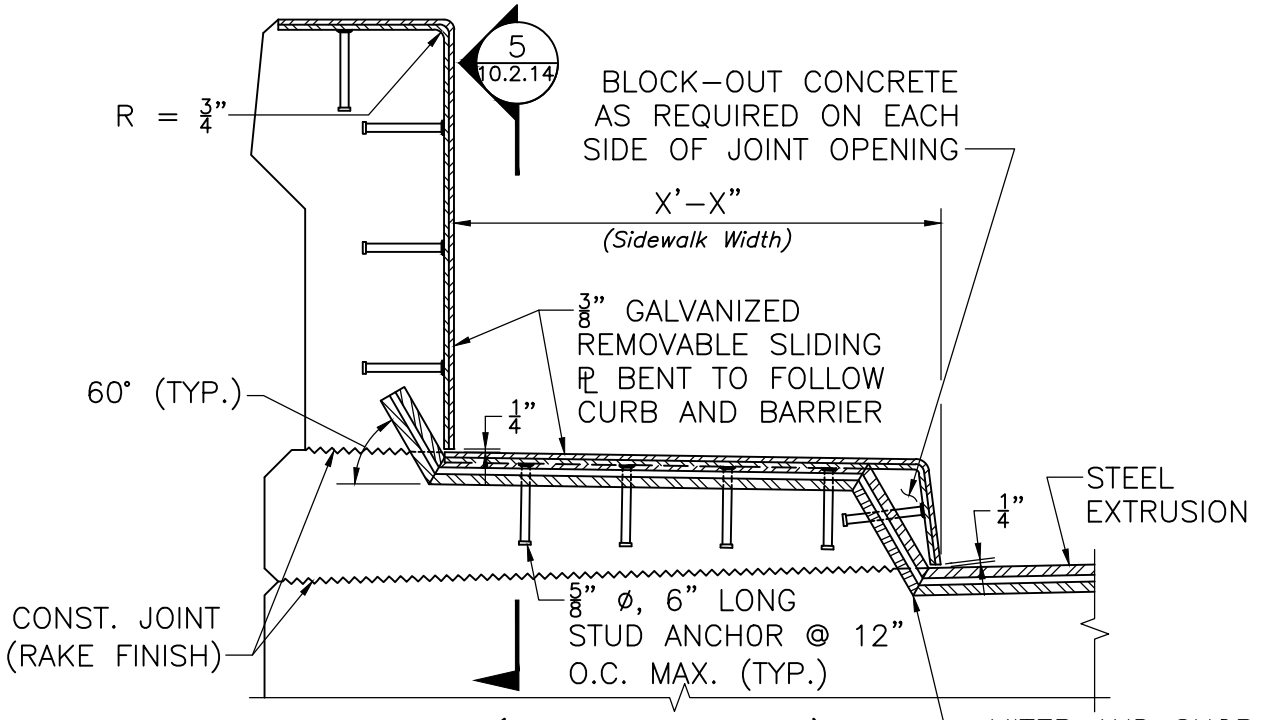

(THRU SIDEWALK)

SECTION 4

SCALE: 1" = 1'-0"

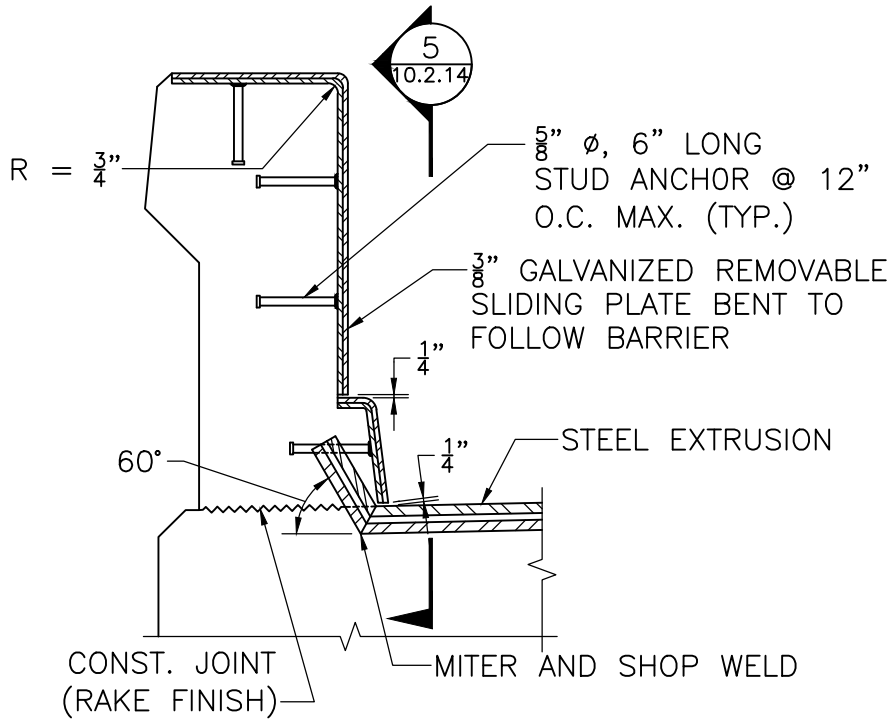

(THRU SAFETY CURB)

SECTION 4

SCALE: 1" = 1'-0"

NOTE:
See Dwg. No. 10.2.16 for Construction Notes to be placed on Construction Drawings.

massDOT Massachusetts Department of Transportation Highway Division

LRFD BRIDGE MANUAL, PART II

LONGITUDINAL SECTIONS CP-PL2 BARRIER

STRIP SEAL JOINT DETAILS

DATE OF ISSUE
JUNE 2013

DRAWING NUMBER
10.2.11

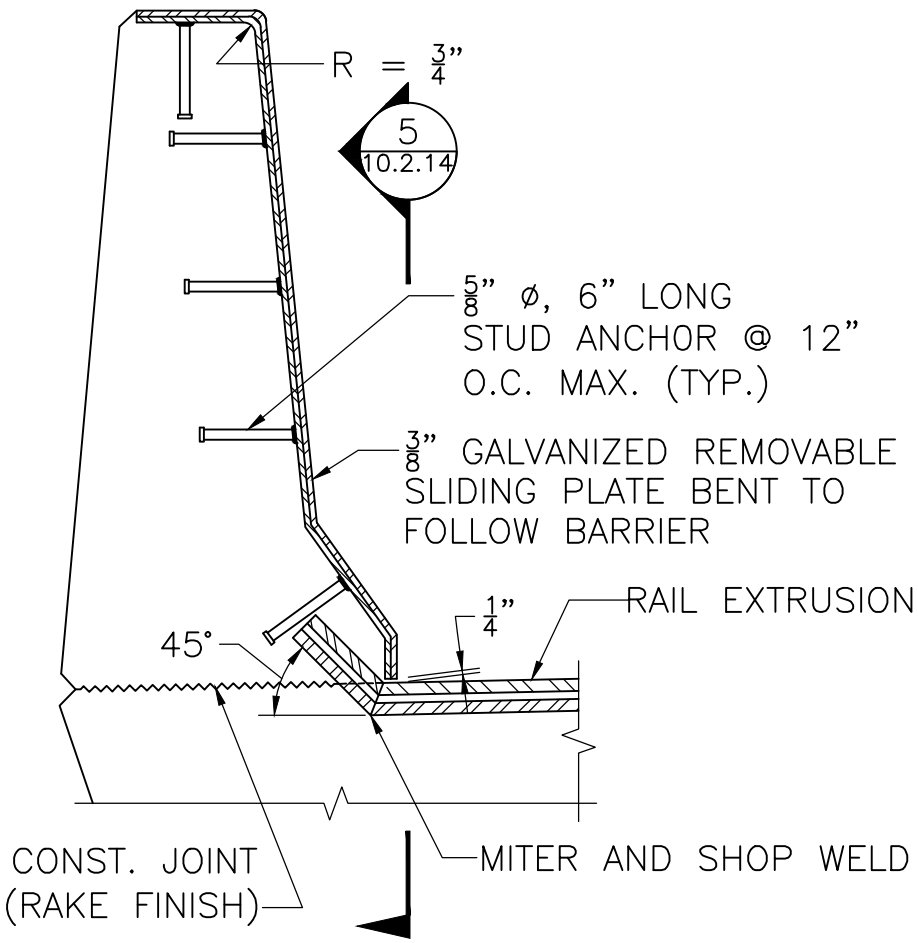

SECTION 4

SCALE: 1" = 1'–0"

NOTE:

See Dwg. No. 10.2.16 for Construction Notes to be placed on Construction Drawings.

massDOT Massachusetts Department of Transportation Highway Division LRFD BRIDGE MANUAL, PART II	LONGITUDINAL SECTION CF BARRIERS STRIP SEAL JOINT DETAILS	DATE OF ISSUE JUNE 2013 DRAWING NUMBER **10.2.12**

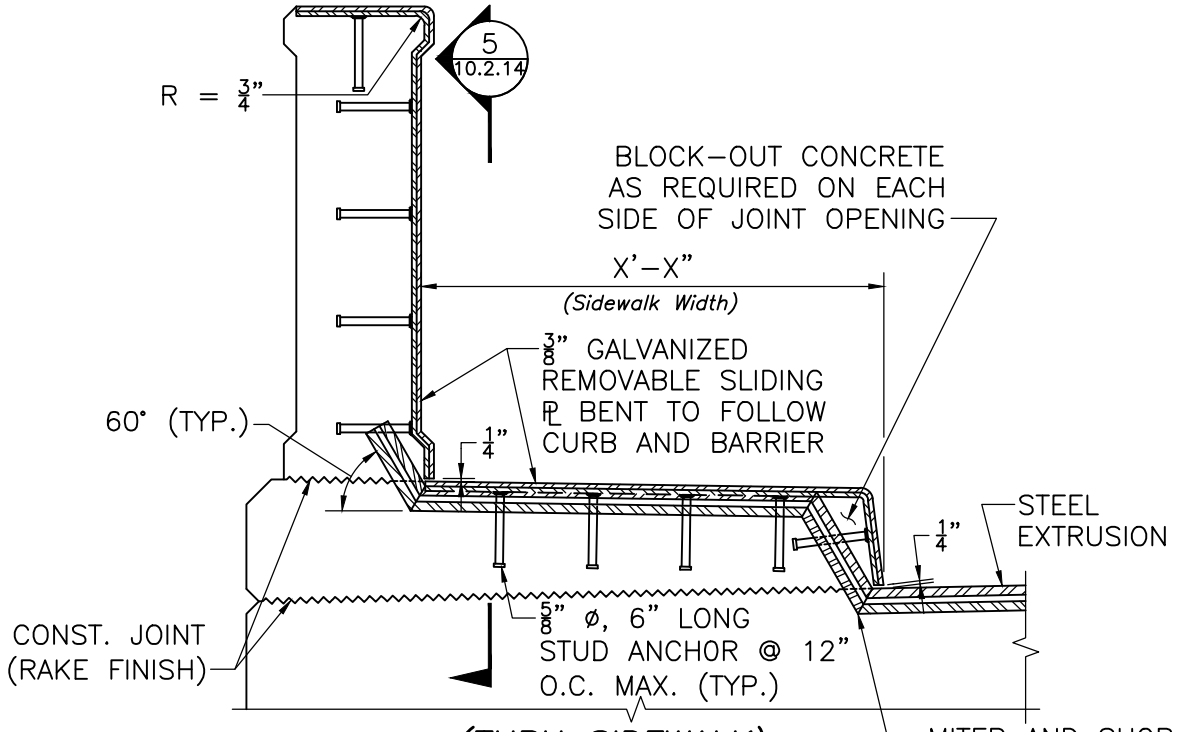

(THRU SIDEWALK)

SECTION 4

SCALE: 1" = 1'-0"

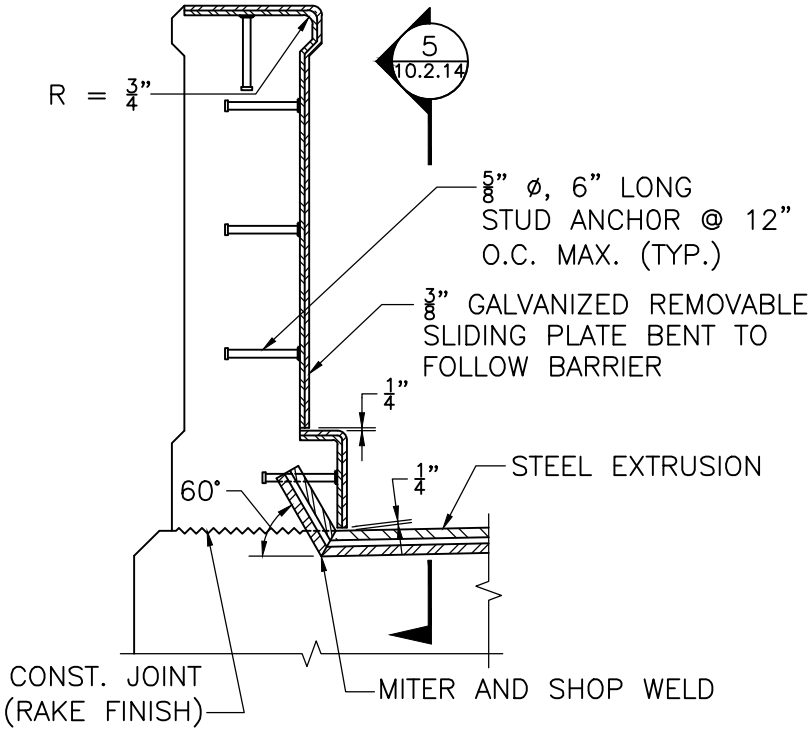

(THRU SAFETY CURB)

SECTION 4

SCALE: 1" = 1'-0"

NOTE:
See Dwg. No. 10.2.16 for Construction Notes to be placed on Construction Drawings.

massDOT Massachusetts Department of Transportation Highway Division

LRFD BRIDGE MANUAL, PART II

LONGITUDINAL SECTIONS CT-TL2 BARRIER

STRIP SEAL JOINT DETAILS

DATE OF ISSUE
JUNE 2013

DRAWING NUMBER
10.2.13

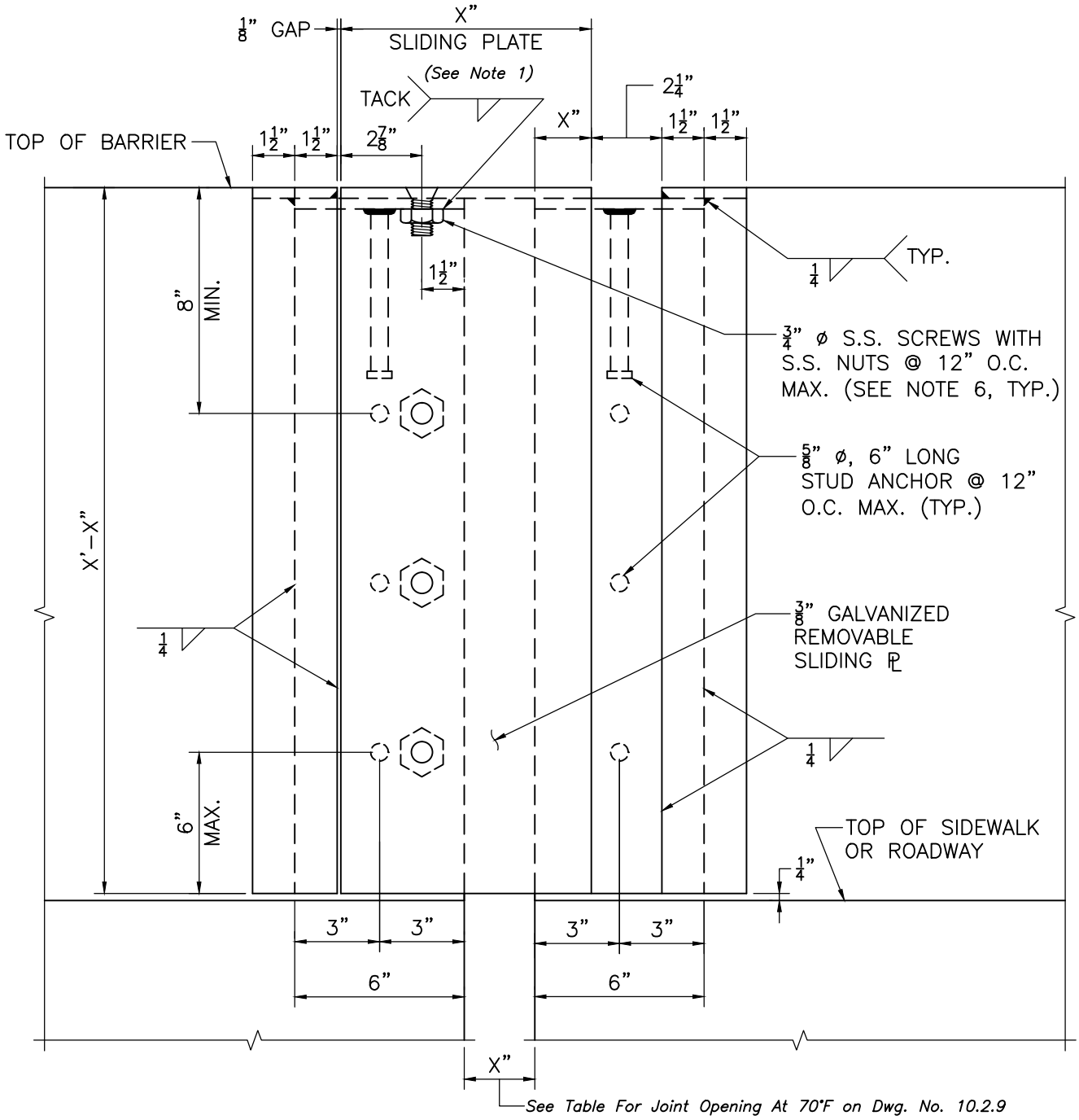

SECTION 5

SCALE: 3" = 1'-0"

NOTES:

1. *For steel and concrete bridges with span length of up to 190' and 270' respectively, this dimension shall be taken as 2 1/4". For bridges with longer spans this dimension shall be taken as thermal movement due to the temperature fall as per Part I, Paragraph 3.7.1 of the Bridge Manual, plus 3/4".*
2. *See Dwg. No. 10.2.16 for Construction Notes to be placed on Construction Drawings.*

massDOT Massachusetts Department of Transportation Highway Division LRFD BRIDGE MANUAL, PART II	TYPICAL VERTICAL SECTION THRU BARRIERS STRIP SEAL JOINT DETAILS	DATE OF ISSUE JUNE 2013 DRAWING NUMBER **10.2.14**

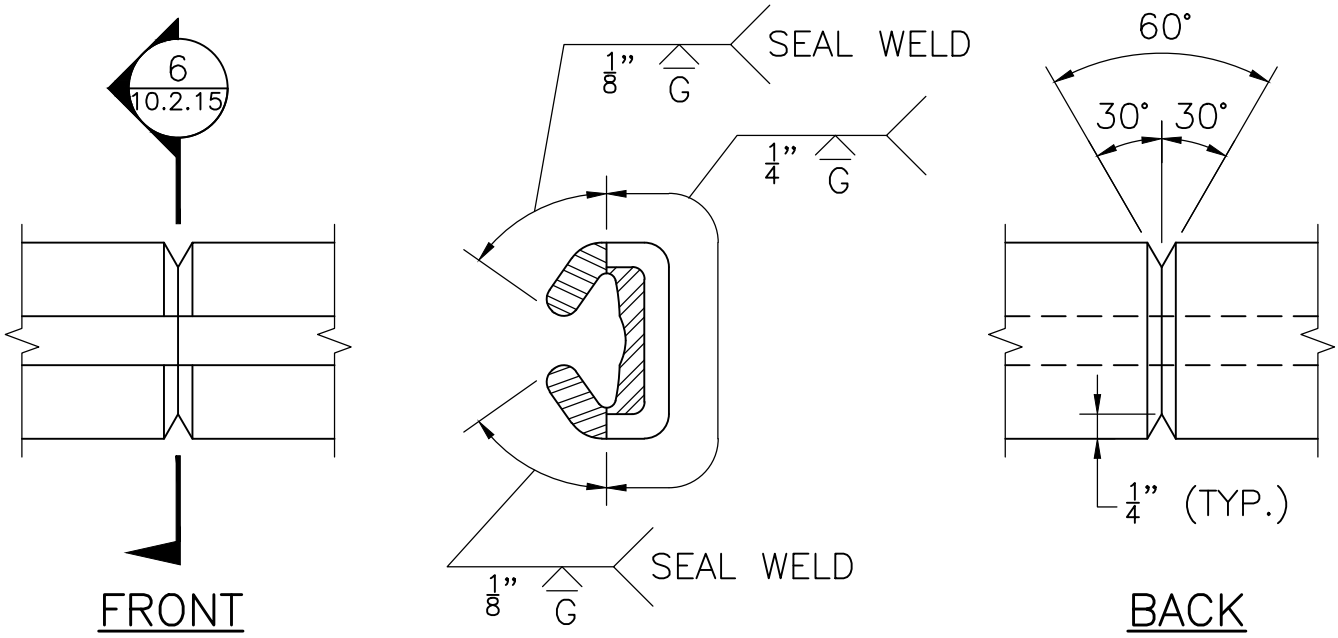

SECTION 6

STEEL EXTRUSION SHOP SPLICE DETAIL

SCALE: 6" = 1'–0"

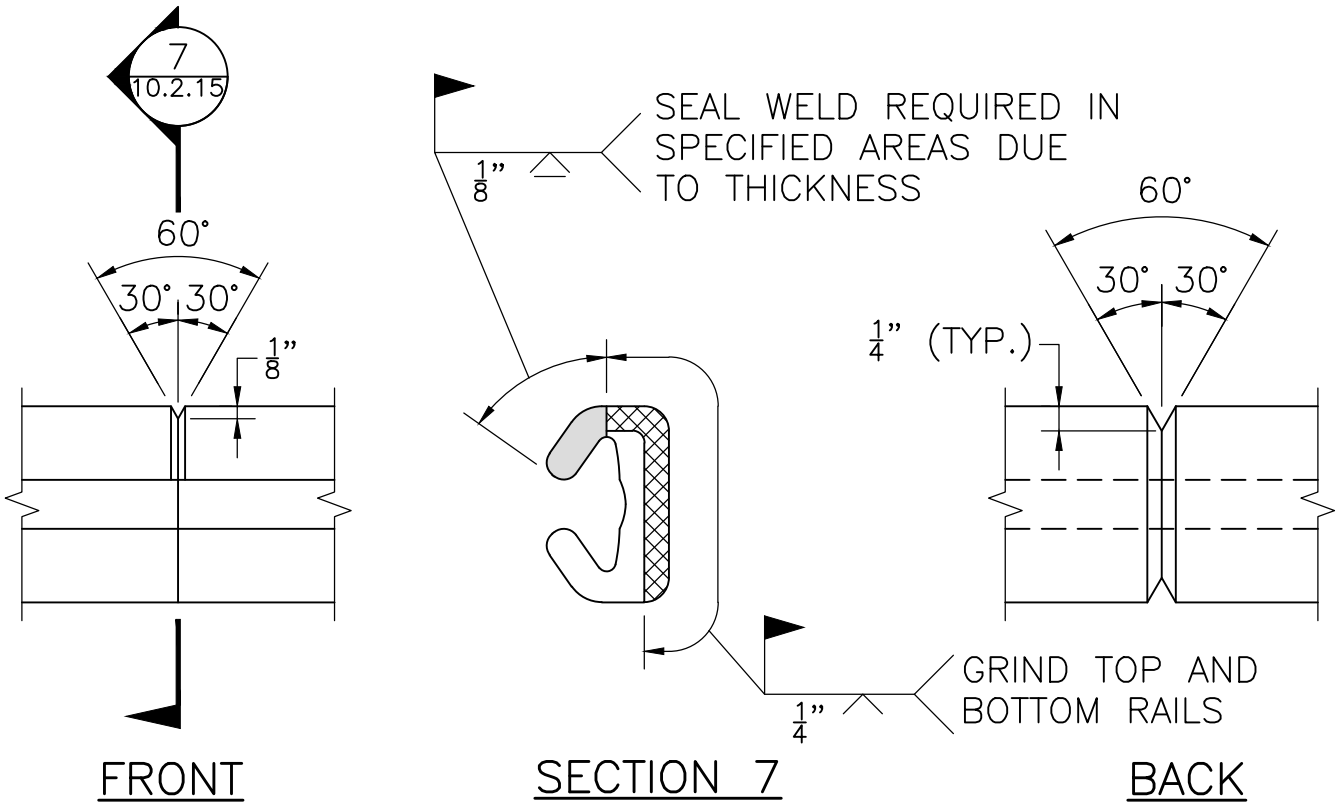

STEEL EXTRUSION FIELD SPLICE DETAIL

SCALE: 6" = 1'–0"

massDOT Massachusetts Department of Transportation Highway Division LRFD BRIDGE MANUAL, PART II	SPLICE DETAILS STRIP SEAL JOINT DETAILS	DATE OF ISSUE JUNE 2013 DRAWING NUMBER **10.2.15**

STRIP SEAL JOINT NOTES:

1. THE DETAILS SHOWN HERE ARE INTENDED AS A GENERAL GUIDE FOR A TYPICAL GLANDULAR TYPE STRIP SEAL JOINT SYSTEM. SHOP DRAWINGS WHICH INCLUDE DETAILS OF THE GLAND SHAPE, STEEL EXTRUSION SHAPE, WELDING PROCEDURE SPECIFICATIONS, ANCHOR ARRANGEMENT, TEMPERATURE CORRECTION REQUIREMENTS, AND TEMPORARY SUPPORT DETAILS SHALL BE SUBMITTED FOR APPROVAL OF THE ENGINEER ACCORDING TO THE STANDARD SPECIFICATIONS.

2. ALL STRUCTURAL STEEL COMPONENTS SHALL CONFORM TO AASHTO M270 GRADE 36. AFTER THE COMPLETION OF ALL WELDING OPERATIONS STEEL PLATE ASSEMBLIES SHALL BE HOT–DIP GALVANIZED.

3. ELASTOMERIC CONCRETE BLOCKOUT SHALL BE SANDBLASTED, CLEANED WITH COMPRESSED OIL LESS AIR, AND PRIMED WITH BONDING COMPOUND PRIOR TO CASTING ELASTOMERIC CONCRETE.

4. NEOPRENE STRIP SEAL SHALL BE BONDED TO STEEL EXTRUSION WITH APPROVED ADHESIVE.

5. INSTALL CONTINUOUS NEOPRENE STRIP SEAL IN THE FIELD. SPLICING OF SEAL IS NOT PERMITTED. TEMPORARY SEAL SHALL BE REQUIRED ON STAGE CONSTRUCTION PROJECTS.

6. PRIOR TO PLACEMENT OF SIDEWALK/SAFETY CURB CONCRETE, LUBRICATE STAINLESS STEEL SCREWS WITH GRAPHITE AND SET SECURELY IN PLACE. MACHINE SCREWS TO BE TEMPORARILY REMOVED AFTER CONCRETE HAS ATTAINED FINAL SET.

7. NO WELDING OF PORTIONS OF STEEL EXTRUSIONS IN DIRECT CONTACT WITH NEOPRENE SEAL SHALL BE PERMITTED.