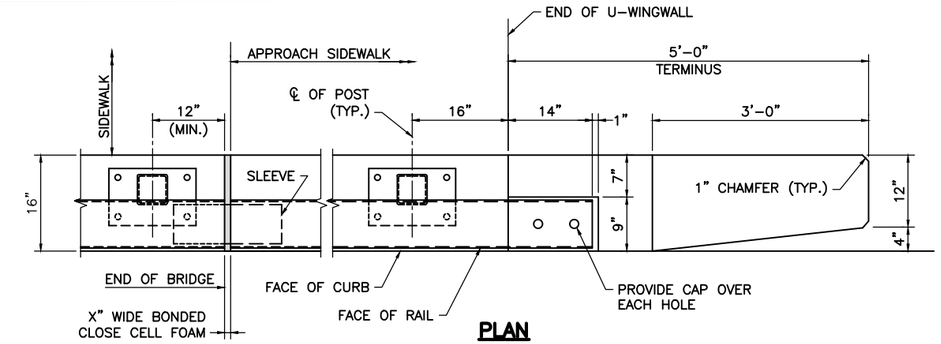


**PLAN**

SCALE: 1" = 1'-0"

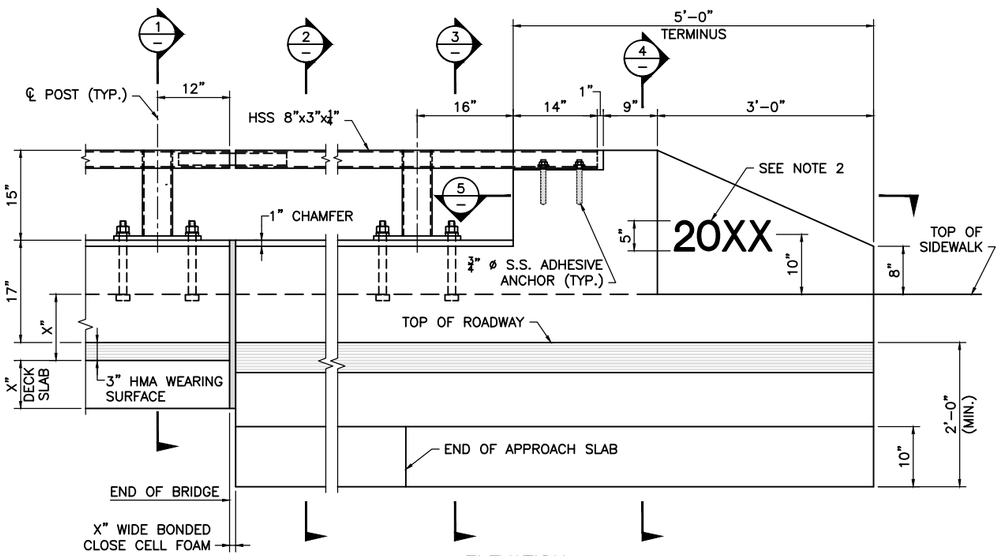


**ELEVATION**

SCALE: 1" – 1'-0"

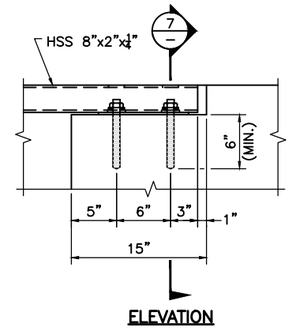


**ELEVATION**

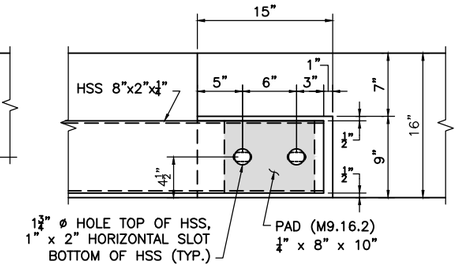


**PLAN**

**RAIL ATTACHMENT**

SCALE: 1½" = 1'-0"

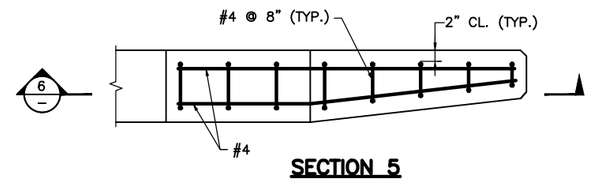


**SECTION 5**

SCALE: 1" – 1'-0"

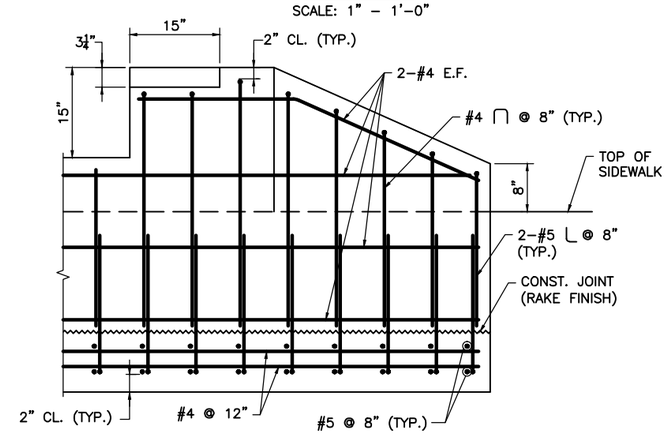


**SECTION 6**

SCALE: 1" – 1'-0"

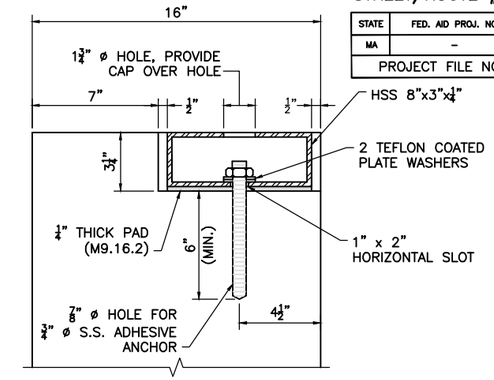


**SECTION 7**

SCALE: 3" = 1'-0"

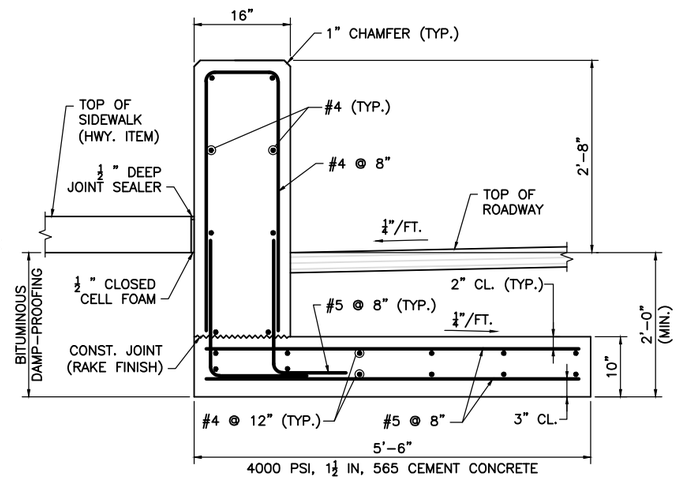


**SECTION 4**

SCALE: 1" – 1'-0"

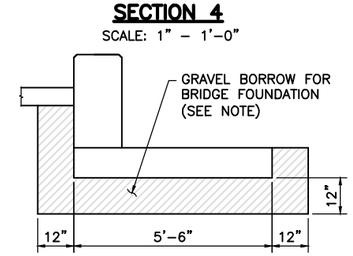


**NOTE:**

GRAVEL BORROW SHALL BE PLACED AND THOROUGHLY COMPACTED TO THE GRADE OF THE BOTTOM OF THE SLAB.

**MC–TL3 RAILING BACKFILL**

SCALE: ½" = 1'-0"

**NOTES:**

1. ALL CONCRETE FOR THE MC–TL3 RAILING AND TERMINUS SHALL BE 5000 PSI, ¾ IN, 685 HP CEMENT CONCRETE.
2. USE LATEST CONTRACT COMPLETION YEAR IN EFFECT WHEN THE FIRST TERMINUS IS CAST.

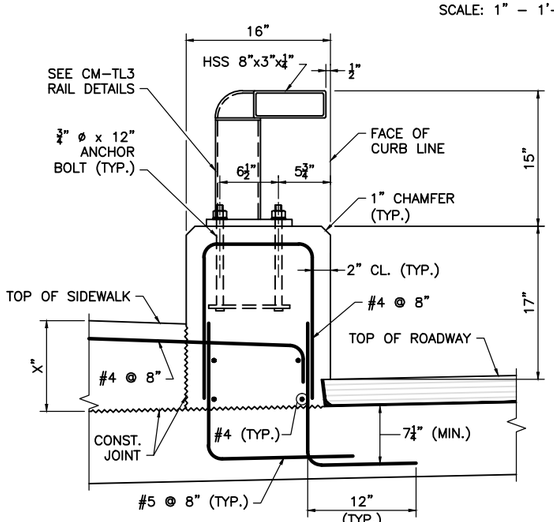


**NOTE:**

SIDEWALK AND DECK SLAB REINFORCEMENT NOT SHOWN FOR CLARITY.

**SECTION 1**

SCALE: 1½" = 1'-0"

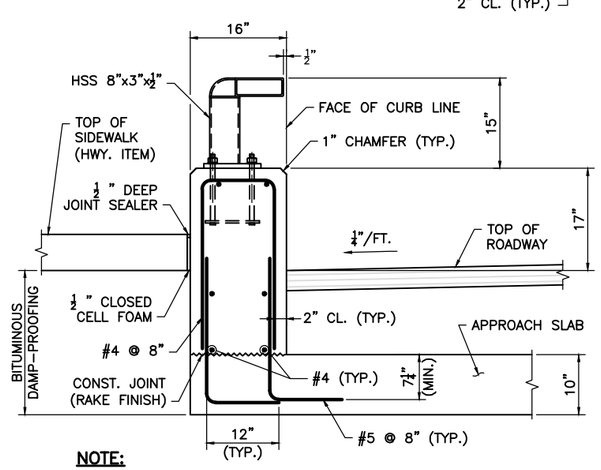


**NOTE:**

APPROACH SLAB REINFORCEMENT NOT SHOWN FOR CLARITY.

**SECTION 2**

SCALE: 1" – 1'-0"

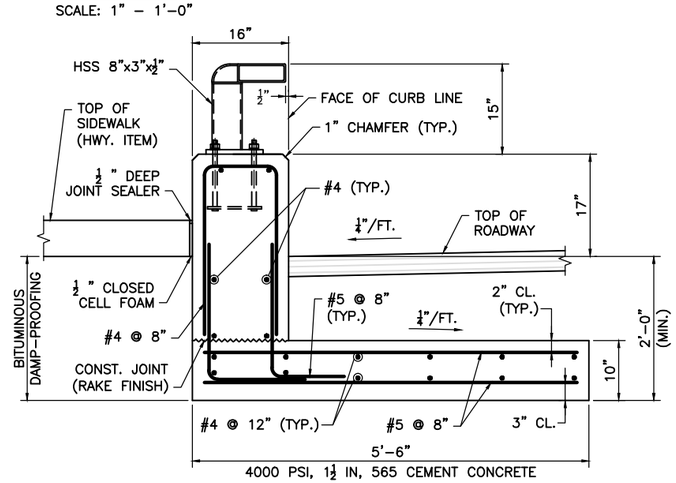


**SECTION 3**

SCALE: 1" – 1'-0"

# TERMINUS FOR CM–TL3 BRIDGE RAILING

CITY/TOWN
STREET/ROUTE # OR NAME

| STATE | FED. AID PROJ. NO. | SHEET NO. | TOTAL SHEETS |
|---|---|---|---|
| MA | – | X | X |
| PROJECT FILE NO. XXXXXX | | | |

| MONTH DD, YYYY | ISSUED FOR CONSTRUCTION |
|---|---|
| DATE | DESCRIPTION |
| USE ONLY PRINTS OF LATEST DATE | |

SHEET XX OF XX SHEETS BRIDGE NO. X–XX–XXX (XXX)

Date: June 2013

TERMINUS - CM-TL3 BRIDGE RAILING.DWG 8-Jan-2014

Xxxxxx Structural Submittal (S#) DD-Month-YYYY