Commonwealth of Massachusetts
Executive Office of Energy & Environmental Affairs
DEPARTMENT OF ENERGY RESOURCES

ALTERNATIVE ENERGY PORTFOLIO STANDARD

GUIDELINE

ON METERING AND CALCULATING THE USEFUL THERMAL OUTPUT OF ELIGIBLE RENEWABLE THERMAL GENERATION UNITS – PART 2

[Effective Date]

Pursuant to the Alternative Energy Portfolio Standard Regulations at 225 CMR 16.00

This Guideline provides the methods by which the thermal output of intermediate and large Renewable Thermal Generation Units (RTGUs) qualified for the Alternative Portfolio Standard (APS) shall be metered and how the meter readings are to be used in conjunction with the APS renewable thermal alternative energy credit formula to determine the number of Alternative Energy Credits (AECs) generated. This document is Part 2 of the Guideline on Metering and Calculating the Useful Thermal Output of Eligible Renewable Thermal Generation Units, Part 1 of the guideline can be found at the link below.[1]A Table of Contents, Table of Figures, and List of Tables can be found immediately following this section.

The purpose of this Guideline is to ensure uniform, accurate, reliable, and verifiable measurements of RTGU performance for determination of APS benefits, as appropriate to RTGU size and expense.

This Guideline is effective immediately upon issuance. However, the Department of Energy Resources (Department) may consider exceptions from the Guideline in the case of RTGUs that went into commercial operation prior to the issuance date, but not earlier than January 1, 2015.

[1] Part 1 of the Guideline on Metering and Calculation the Useful Thermal Output of Eligible Renewable Thermal Generation Units can be found at http://www.mass.gov/eea/energy-utilities-clean-tech/renewable-energy/renewable-thermal/renewable-heating-and-cooling-alternative-portfolio-std.html

Table of Contents

1) Provisions in the Statute and Regulations 6
2) Applicability 7
3) Metering Requirements and Formulae for Intermediate and Large, RTGUs 9
A) General 9
1) Quantification of Parasitic Thermal Energy 12
2) Non Useful Thermal Energy 12
3) Locating Btu Meters 12
4) Measuring the Net Renewable Thermal Energy Transferred to a Useful Thermal Load 14
B) General Formulae for the Quantification of Useful Thermal Energy 14
C) Minimum Efficiency Standard for Large, Wood Fueled RTGUs 16
D) Acquisition, Recording, Storing, and Transmittal of Metered Data 16
E) Meter Standards 17
F) Thermal Energy Meters 18
G) Fuel Meters 19
H) Electric Meters 20
I) Accuracy of Thermal and Fuel Metering 21
J) Intermediate and Large, Solar Hot Water Systems 21
1) Major System Components 21
2) Meters 21
3) Data Acquisition System(s) (DAS) 22
4) Formula for Intermediate, Solar Thermal RTGUs 26
5) Metering of Intermediate, Solar Thermal RTGUs 27
6) Metering of Large, Solar Thermal RTGUs 32
7) Formula for Large, Solar Thermal RTGUs 33
K) Transpired Solar Air Collector (TSAC) Systems 34
L) Intermediate, TSAC RTGUs 34
1) Data Acquisition System(s) (DAS) 34
2) Metering 36
3) Formula for Intermediate, TSAC RTGU 37

M) Large, TSAC RTGUs 39
1) Formula for Intermediate, TSAC RTGUs 40
N) Intermediate and Large, Air Source Heat Pump Systems 40
1) Direct Expansion (DX), Air Source Heat Pumps (ASHPs) 40
2) Metering for Intermediate, DX ASHPs 41
3) Formula for Intermediate, DX ASHPs 43
4) Metering of Large, DX ASHPs 46
5) Formula for Large, DX ASHPs 48
6) Variable Refrigerant Flow (VRF), ASHPs 49
7) Metering for Intermediate, VRF AHSPs 51
8) Formula for Intermediate, VRF ASHPs 53
9) Metering for Large, VRF ASHPs 5554
10) Formula for Large, VRF ASHPs 57
O) Intermediate and Large, Ground Source Heat Pump Systems 58
1) Formula for Intermediate, GSHPs 61
2) Metering for Large, GSHPs 63
3) Formula for Large, GSHPs 65
P) Intermediate and Large, Fired Systems 67
1) Fired RTGUs which are Combined Heat and Power (CHP) Systems 68
2) Thermal Storage 69
3) Intermediate, Fired RTGUs, which Generate a Hot Heat Transfer Fluid and/or Steam 69
4) Formula for Intermediate, Fired RTGUs 71
5) Firing Modes for Intermediate, Fired RTGUs 73
6) Determination of RH for Intermediate, RTGUs That Are Not CHP Systems 74
7) Intermediate, Fired CHP RTGUs 74
8) Large, Fired RTGUs which Generate a Hot Heat Transfer Fluid 75
9) Metering for Large, Fired RTGUs which Generate a Hot Heat Transfer Fluid 75
10) Formulae for a Large, RTGU Generating a Hot Heat Transfer Fluid 76
11) Firing Modes 79
12) Large, Fired RTGU which Generate Steam 84
13) General Metering Requirements for Large, RTGUs Generating Steam 84

14) Formula for Large, RTGUs Generating Steam 8987

4. Miscellaneous 9896

Table of Figures

Figure 1 Diagram of a generic central RTGU with Distributed Thermal Loads 14
Figure 2. Simplified Schematic of a Generic Intermediate Size Solar Thermal RTGU 24
Figure 3. Location of Pressure Indicating Gauges Up and Downstream From the Collector Heat Transfer Circulating Pumps 25
Figure 4. Example of a Typical Pump Curve with Showing the Design Operating Point 30
Figure 5. Simplified Schematic of a Generic Large Solar Thermal RTGU 32
Figure 6. Simplified Schematic of a Generic, Intermediate TSAC RTGU 36
Figure 7. Simplified Schematic of a Generic, Large, TSAC RTGU 39
Figure 8. Metering Diagram for an Intermediate, DX ASHP 42
Figure 9. Metering Diagram for a Large, DX ASHP 47
Figure 10. Metering Diagram for an Intermediate, VRF ASHP 52
Figure 11. Metering Diagram for a Large, VRF ASHP 5554
Figure 12. Metering Diagram for an Intermediate GSHP 60
Figure 13. Metering Diagram for a Large GSHP 64
Figure 14. Metering Diagram for an Intermediate, Fired RTUG (Both Hot HTF and Steam) 69
Figure 15. Metering Diagram for a Large Fired RTUG which Generates a Hot Heat Transfer Fluid 76
Figure 16. Simplified Schematic Diagram of a Generic RTGU Generating Steam 86

List of Tables

Table 1: APS Renewable Thermal Generation Unit Classification 8
Table 2. Thermal Energy Meter Requirements for Steam 18
Table 3. Thermal Energy Meter Requirements for Hot Water 19
Table 4. Thermal Energy Meter Requirements for Air 19
Table 5. Thermal Energy Meter Requirements for Refrigerants 19
Table 6. Fuel Meter Requirements for Natural Gas 20
Table 7. Fuel Meter Requirements for Biogas 20

1) **Provisions in the Statute and Regulations**

The APS statute at M.G.L. Chapter 25A, Section 11F½(a) [2], as amended by Chapter 251 of the Acts of 2014, mandates the following as an eligible Alternative Energy Generating Source (emphasis added as italics):

> (iv) any facility that generates useful thermal energy using sunlight, biomass, biogas, liquid biofuel or naturally occurring temperature differences in ground, air or water, whereby 1 megawatt-hour of alternative energy credit shall be earned for every 3,412,000 British thermal units of net useful thermal energy produced and *verified through an on-site utility grade meter or other means satisfactory to the department*;

Pursuant to the verification provision in that language, the APS regulations state the following at 225 CMR 16.05(4):

> (b) Metering Requirements. The net Useful Thermal Energy output from an APS Renewable Thermal Generation Unit shall be metered according to the specifications laid out in the Department's *Guideline on Metering and Calculating the Useful Thermal Output of Eligible Renewable Thermal Generation Units* and verified by an independent Third Party Meter Reader as defined in Rule 2.5(j) of the NEPOOL GIS Operating Rules and approved by the Department. The APS Alternative Generation Attributes reported to the NEPOOL GIS by an independent Third Party Meter Reader shall be the amount as specified in 225 CMR 16.05(1)(a)6.b. This amount will be inclusive of any netting of energy use by the APS Renewable Thermal Generation Unit as prescribed in 225 CMR 16.05(1)(a)6.b.iii., and the application of any multiplier in 225 CMR 16.05(1)(a)6.b.ii.
>
> (1) An APS Renewable Thermal Generation Unit that uses more than one eligible technology in 225 CMR 16.05(1)(a)6.a. is required to use the same independent Third Party Meter Reader for all technologies.
>
> (2) Each APS Renewable Thermal Generation Unit is required to have its own individual NEPOOL GIS asset. An APS Renewable Thermal Generation Unit that uses more than one eligible technology in 225 CMR 16.05(1)(a)6.a. is required to have a NEPOOL GIS asset for each technology. APS Renewable Thermal Generation Units that utilize the same technology and are located in the same state may qualify as an Aggregation and share a NEPOOL GIS asset.
>
> ~~(3) An APS Renewable Thermal Generation Unit that meets the criteria of a small Generation Unit or an intermediate as prescribed in 225 CMR 16.05(1)(b)(ii) shall be exempt from the metering requirements in 225 CMR 16.05(4)(b) and, instead, be subject to the Small and Intermediate Generation Unit Annual Net Useful Thermal Energy Determination in 225 CMR 16.05(4)(c).~~

[2] The APS statute is available at https://malegislature.gov/Laws/GeneralLaws/PartI/TitleII/Chapter25A/Section11F1~2. These were amended by sections 1, 2, 3, and 9 of Chapter 251 of the Acts of 2014.

This Guideline specifies the manner by which the output of RTGUs can be verified through on-site meters which meet the minimum APS metering requirements as described in Section 3 of this document, or other means as specifically approved by the Department on a case by case basis.

2) **Applicability**

This document provides general guidance on the type, number, and location of meters specific to each type of RTGU eligible under the APS. The Department strongly suggests that information showing the number, type, and location of meters to be installed, be submitted to the Department for preliminary review prior to the issuance of for bid or for construction designs and/or before procurement of the meters.

All direct measurements of energy are to be done by meters which comply with the requirements as set forth in Section 3 of this Guideline. The Department has determined that it is appropriate, practical, and non-burdensome to require that Large RTGUs be fully and directly metered and that a reduced level of direct metering combined with indirect metering is required for Intermediate sized RTGUs.

The ongoing operation of all RTGUs will be verified through means appropriate for each. ~~The definitions of small, intermediate, and large for the different eligible types of RTGUs as provided by the regulations and performance specifications for metering Intermediate and Large RTGUs.~~ Additionally, the Department has determined that a subset of Large RTGUs that use biomass, biofuels, or biogas can be accurately metered by using fuel input recording, in combination with the RTGU's energy conversion efficiency and fuel energy content.

225 CMR 16.05(4)(a) and Table 1 below summarize how RTGUs will be classified based on their capacity and defines the cut-off points for distinguishing between s~~S~~mall, i~~I~~ntermediate, and l~~L~~arge RTGUs. The size thresholds apply to the total combined capacity of the RTGU serving the thermal load. If an RTGU consists of several individual separate units, their capacities will be summed and the total capacity will be considered against the size threshold. In the case of a combination of solar thermal and other RTGUs, the thresholds will be applied separately to the solar and non-solar RTGUs.

Table 1: APS Renewable Thermal Generation Unit Classification

Classification	Small	Intermediate		Large
AEC calculation basis	Calculated net renewable thermal output	Calculated net renewable thermal based on indirect metering	Calculated net renewable thermal output based on direct metering of fuel input	Metered net renewable thermal output
Solar thermal: evacuated tube and flat plate solar hot water	Collector surface area less than 660 sq ft	Collector surface area between 660 and 4000 sq ft	-	Collector surface area greater than 4000 sq ft
Solar thermal: solar hot air ~~/ Sludge Dryer~~	-	Collector surface area less than 10,000 sq ft	-	Collector surface area greater than 10,000 sq ft
Solar sludge dryer	-	-	-	All
Eligible Biomass Fuel	-	-	Capacity ~~Between 0.34 &~~less than 1 MMBtu per hour	Capacity greater than 1 MMBtu per hour
Air source heat pump: electric motor or engine driven	Output capacity less than 0.134 MMBtu per hour	-	Output capacity between 0.134 and 1.00 MMBtu per hour	Output capacity greater than 1.0 MMBtu per hour
Ground source heat pump	Output capacity less than 0.134 MMBtu per hour	-	Output capacity between 0.134 and 1.00 MMBtu per hour	Output capacity greater than 1.0 MMBtu per hour
Deep geothermal	-	-	-	All

[1] Submetering of non-renewable fuel (e.g. gas or grid electricity) consumption will be used in conjunction with original equipment manufacturer performance data to calculate net thermal output for Intermediate size Air Source Heat Pumps (ASHP), Ground Source Heat Pumps (GSHP), and Solar Thermal RTGUs.

[2] The thermal output and non-renewable fuel consumption are metered directly.

[3] All Biogas/Biofuel RTGUs must apply via an aggregator as described in section 4(H) below.

[4] Output heating capacity at entering source air temperature of 5°F

[~~5~~5] The performance of Intermediate and Large Air Source Heat Pump units must be AHRI certified.

[6] If Air-Conditioning and Heating Institute (AHRI) Certificate exists, output heating capacity as indicated on the AHRI Certificate at Full Load. If AHRI Certificate does not exist, use manufacturer's rated output heating capacity as indicated below:

(a) For closed loop, water to water heat pumps: capacity at source entering water temperature of 32°F and load entering water temperature of 104°F If multiple ratings are shown under these conditions, use the source water and load water flow rate that results in the largest heating capacity.

(b) For open loop water to water heat pumps: capacity at source entering water temperature of 50°F and load entering water temperature of 104°F. If multiple ratings are shown under these conditions, use the source water and load water flow rate that results in the largest heating capacity.

(c) For closed loop, water to air heat pumps, capacity at source entering water temperature of 32°F and load entering air temperature of 70°F. If multiple ratings are shown under these conditions, use the source water and load air flow rate that results in the largest heating capacity.

(d) For open loop, water to air heat pumps, capacity at source entering water temperature of 50°F and load entering air temperature of 70°F. If multiple ratings are shown under these conditions, use the source water and load air flow rate that results in the largest heating capacity.

For the purpose of this Guideline, the definition of closed loop and open loop are as follows:

Close loop: Any water to air or water to water ground source heat pump system having no direct contact between the groundwater and the system fluid used for heat exchange.

Open loop: Any water to air or water to water ground source heat pump system which uses groundwater as the fluid for heat exchange.

3) **Metering Requirements and Formulae for Intermediate and Large, RTGUs**

A) General ~~Principles~~

- The British Thermal Unit (Btu) is a unit of thermal energy commonly used in the quantification of the capacity of a RTGU, as well as for the input and output energy of a system and/or component.

- All of the energy terms in the APS formulae for the determination of AECs are to be expressed in megawatt hours (MWh).

- 1 Btu = 1/3.412 watt hour; 1 MMBtu = 1,000,000 Btu = 1/3.412 MWh

- Net useful heat is the thermal energy by a RTGU that is transferred to a facility and/or process load and is equal to the thermal energy supplied to the load from the RTGU minus thermal energy returned from the load to the RTGU minus any parasitic thermal energy.

- RTGUs which are Combined Heat and Power (CHP) Systems:

  ~~An RTGU which co-generates electricity and useful heat is designated as a CHP RTGU and may qualify for Massachusetts Portfolio Standard Programs and earn credits in one of two different ways:~~

  ~~(a)~~ ~~A CHP RTGU may qualify as a Renewable Portfolio Standard (RPS) Class I generator and as an APS RTGU In this case:~~
  ~~(i) The net MWh electricity generated by the CHP RTGU earns Class I Renewable Energy Credits (RECs)~~
  ~~(ii) The net useful heat generated by the CHP RTGU earns one AEC per net MWh of useful heat transferred to a useful load~~

  ~~(b)~~ ~~A CHP RTGU may qualify as a RPS Class I generator and as an APS CHP system per the regulations in CMR 225 16.00 that pertain to APS CHP systems and the related Guidelines. In this case:~~
  ~~(i) The net MWh of electricity generated by the CHP RTGU earns Class I RECs~~
  (ii) ~~The net MWh of electricity and the net MWh of useful heat generated by the unit earn AECs~~ per the APS CHP formula as shown in the APS CHP regulations

- All electricity supplied by the ISO-NE grid to a RTGU including any auxiliary systems is considered to be non-renewable fuel and must be subtracted from the net useful heat generated. The amount of non-renewable source fuel per MWh of grid electricity consumed by a RTGU is equal to the MWh electricity consumed at the site divided by the most recently published ISO-NE marginal grid efficiency, which at the date of this version of this Guideline is 0.44 MWh source fuel/MWh electricity delivered.

~~1) Parasitic Energy~~

The term ~~Parasitic energy is defined as the electricity or thermal energy required to operate any auxiliary component or system of the RTGU, where~~ auxiliary denotes a component and/or sub-system that does not directly generate Useful Thermal Energy, but whose operation is required in order for the generation of ~~Useful Thermal Energy~~useful thermal energy to occur. Examples of auxiliary components are:

- Boiler feedwater pumps
- Combustion air supply fans
- Biomass boiler stokers
- Solar thermal collector fluid circulating pumps

~~Parasitic electricity is applicable only to RTUGs which also generate electricity (i.e. combined heat and power CHP systems)~~

~~Parasitic thermal energy may be applicable to all RTGUs; however it is typically limited to RTGUs which generate steam.~~

In general, components such as pumps, fans, blowers, etc. that may be installed and operated in conjunction with an RTGU whose function is to distribute the thermal energy generated by an RTGU to the useful thermal loads, are not considered as auxiliary and the energy required to operate them is not metered or included in the determination of AECs. ~~The exception is any~~

Exception: If a RTGU ~~which~~ is located more than 500 ft. from the point of connection with a thermal load or with the thermal hosts' distribution system being supplied by the RTGU~~.~~, the grid sourced electricity supplied to circulate heat transfer fluid between a central RTGU and the point of connection with each remote building or self-contained load is to be subtracted from the net renewable useful heat transferred.

- ~~Quantification of~~ Parasitic ~~Electricity~~Energy is defined as the electricity or thermal energy that is generated by the RTGU which is used to operate any auxiliary component or system of the RTGU.

~~Parasitic~~ electricity is typically applicable only to a CHP RTUG. Metering and quantification of parasitic electricity for CHP systems that qualify using option 1 or 2 (see above) will conform as are applicable to the APS CHP and RPS Class 1 regulations and guidelines. ~~Parasitic thermal energy may be applicable to all RTGUs; however it is typically limited to RTGUs which generate Any metering of grid source electrical energy, required by this Guideline, shall be done using electric kilowatt hour (kWh) meters which conform to the requirements included in these guidelines. The minimum thresholds for direct metering are:~~

~~Solar Thermal – No minimum~~

~~Air, Ground, and Water Source Heat Pumps – Not Applicable~~
~~Biomass, Liquid Fuel and Biogas – The parasitic electrical energy (kWh) for any auxiliary load that is rated at more than 0.75 kW (1 Horsepower) shall be metered using a revenue-grade kWh meter as specified in Section 3(F) of this Guideline. Auxiliary systems or components fed as a group by a single electrical service can be metered by a single kWh meter installed in that service (e.g. in the feed to a motor control center). Exceptions will considered by the Department on a case-by-case basis.~~motive steam.

1) Quantification of Parasitic Thermal Energy

All efforts should be made to locate a system's Btu meters such that the consumption of parasitic thermal energy is netted out. In the event that this cannot be accomplished the parasitic thermal energy of any auxiliary ~~component~~system with a demand ~~above a To Be Determined~~exceeding 5% of the projected value of the net annual AECs during nominal operating conditions will require either a calculation of the parasitic load or a separate Btu meter. This determination will be at the discretion of the Department.

2) Non Useful Thermal Energy

~~Thermal~~Renewable thermal energy that is rejected to a heat sink (e.g. the air, ground, surface, or storm water) ~~is not considered~~, or in most cases, to ~~be Useful Thermal Energy~~heat feedwater is non Useful Thermal Energy and must be accounted for in the location of Btu meter instruments as well as in the determination of the net metered useful energy.

Wherever possible, the components of Btu meters should be located such that they do not count heat rejected to a heat sink or in most cases to heat feedwater, in the heat being metered as useful. If this is not possible, separate Btu metering will be required to measure the heat rejected to a heat sink and this energy shall be subtracted from the total metered Btus.

3) Locating Btu Meters

a) Whenever possible, Btu meters should be located at a point before the interconnection with the load's thermal distribution system (i.e. on the RTGU side and not on the load side).
b) Whenever possible, Btu meters should be located before any point of connection with a non-useful heat load, such as a radiator of cooling tower that rejects excess heat, before delivery to the distribution system, or rejection of excess heating systems.
c) When a RTGUs is located more than 500 ft from the point of connection with a thermal load, the Btu meter(s) must be located within 30 feet from the point of connection to the thermal load~~.~~

~~*Note: For this case pumping energy to circulate heat transfer fluid between the central RTGU and the point of connection with each remote building or self-contained load is to be considered as either grid electricity, or in the case of a Combined Heat and Power (CHP) RTGU, as parasitic.*~~

.

Figure 1 Diagram of a generic central ~~RGTU~~RTGU with Distributed Thermal Loads

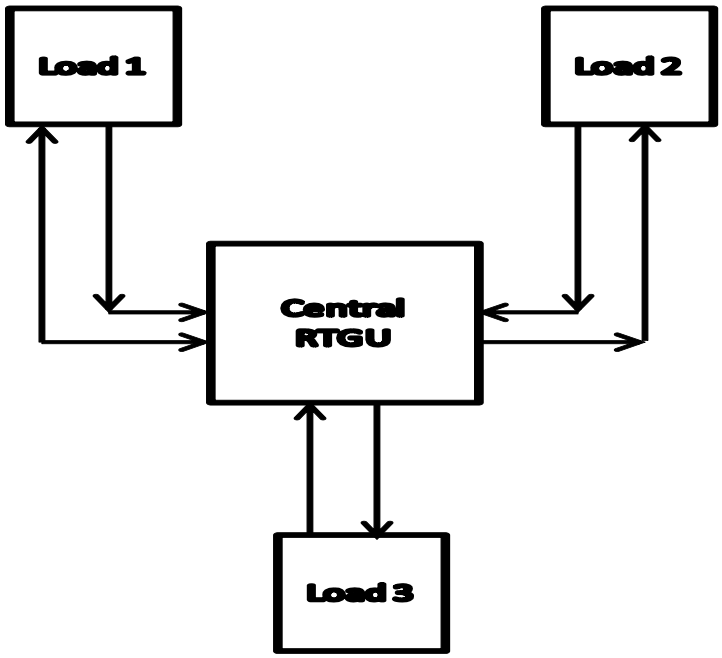

4) Measuring the Net Renewable Thermal Energy Transferred to a ~~Facility's Heating or Cooling~~Useful Thermal Load

(a) Air or Heat Transfer Fluids (including aqueous mixtures): based on mass flow, temperature, and specific heat
(b) Steam: based on mass flow and specific enthalpy ~~(temperature & pressure)~~

B) General Formulae for the Quantification of ~~Alternative~~Useful Thermal Energy ~~Energy Certificates~~

~~1) Systems Using Only a Single Eligible Renewable Fuel~~

$$E_{net,\ out}{}_{AECs} = (UHRH - NUH - P_e - P_{th} - G/0.44) * M$$

~~or~~

$$AECs = (H_{supply} - H_{return} - NUH - P_e - P_{th} - G/0.44) * M$$

Note: All terms are the cumulative as-metered values. Unless otherwise indicated, all units in MWh

Where:

$E_{net, out}$ = Net thermal energy output equivalent

~~UH~~RH = Net Renewable heat transferred to a useful ~~heat~~load

NUH = Non-useful heat

~~H_{supply} = Thermal energy supplied from the RTGU to a useful load~~

~~H_{return} = Thermal energy returned from a useful load to the RTGU~~

~~P_e = Parasitic electricity (applies only to combined heat and power (CHP) RTGUs)~~

P_{th} = Parasitic thermal energy

G = Grid supplied electrical energy

Conversion of site to source nonrenewable fuel per MWh grid electricity = G / (0.44)
~~M = The multiplier assigned to a specific RTGU technology per the Department's *Guideline on AEC Multipliers for Renewable Thermal Generation Units*~~

~~2) System Using an Eligible Renewable Fuel and a Non-Renewable Fuel Which are Not Blended (i.e. Co-fired)~~

~~Per formula in 3(B)(1) above, AECs are based only on metered readings for the period during which the generating system is operating on an eligible renewable fuel.~~

~~3) System Using an Eligible Renewable Fuel and a Non-Renewable Fuel Which are Blended~~

~~Per formula in 3(B)(1) above, with the following modification:~~

~~**$AECs = (RF / (RF + NRF)) * \{(H_{supply} - H_{return} - NUH - P_e - P_{th} - G/0.44) * M\}$**~~

~~*Note: All terms are the cumulative as-metered values. Unless otherwise indicated, all units in MWh*~~

~~Where:~~

~~UH = Net useful heat~~

~~NUH = Non-useful heat~~

~~H_{supply} = Thermal energy supplied from the RTGU to a useful load~~

~~H_{return} = Thermal energy returned from a useful load to the RTGU~~

~~P_e = Parasitic electricity (applies only to combined heat and power (CHP) RTGUs)~~

~~P_{th} = Parasitic thermal energy~~

~~G = Grid supplied electrical energy~~
~~RF = Renewable fuel~~

~~NRF = Non-renewable fuel~~
~~*Notes:*~~
~~*1) "Renewable Fuel" denotes an eligible renewable fuel.*~~
~~*2) RTGUs using non-renewable fuels will be required to complete a fuel plan, which will be an appendix in the Statement of Qualification Application (SQA) for RTGUs.*~~

C) Minimum Efficiency Standard for Large, Wood Fueled RTGUs

All Large wood fueled RTGUs must have an overall net efficiency of forty percent (40%) or higher. For the purpose of this standard, the definition of the efficiency shall be:

Efficiency = (~~Number of AECs~~Useful Thermal Energy) / (MWh equivalent of wood fuel consumed for each month of the as-submitted projected average year)

~~Where the AECs are determined using the APS general formulae as shown above.~~

~~Approval of a Large wood fueled RTGU's Statement of Qualification Application (SQA) by the Department is contingent upon the review and approval of information provided in the SQA, which must demonstrate the RTGU meets this minimum efficiency standard.~~

Approval of AECs as submitted to the NEPOOL Generation Information System (NEPOOL GIS) for a given quarter shall be contingent upon the metered average efficiency, as defined in the definition of efficiency above. The MWh of wood fuel consumed for the given quarter is to be determined per the method and protocol described in Section 3 of the *APS Guideline on Biomass, Biogas, and Biofuels for APS Renewable Thermal Generation Units.*

D) Acquisition, Recording, Storing, and Transmittal of Metered Data

All RTGUs must include a Data Acquisition System (DAS) which must meet the following minimum functional criteria:

~~(a)~~ Input: ~~Collect less than or equal to five-minute interval input data from~~Input must come from each ~~of the~~ APS metering ~~instruments~~system and~~/or devices~~
(a) component, at an interval that does not to exceed 5 minute between inputs.
(b) Storage: ~~Store up to~~ 100 days of cumulative input data
(c) Output:
(i) Have remote electronic access to time stamped data of each input in five minute intervals that can be ~~provided~~exported as a comma separated values (.csv) file
(ii) Data is to be accessible by and transferred directly to the system Independent Verifier and not via a third party.

The DAS may be a stand-alone dedicated unit or ~~can~~ be integrated into an existing system.

E) Meter Standards

All meters required by the APS must meet and conform to all applicable laws, ordinances, codes, regulations, and standards, must be of revenue grade accuracy, quality, and reliability, and must have the capability to generate and transmit a signal to the system DAS.

F) Thermal Energy Meters

Table 2. Thermal Energy Meter Requirements for Steam

Line Size	Btu Meter System Components		System Field Accuracy	Re-Calibration Interval	Notes
	Flow Sensor and Btu Computer	Temperature & Pressure Sensors			
All	*Btu Computer*: Automated real-time computation and totalizer	—	—	—	—
≥8"	*Flow Sensor:* Orifice Plate with Differential Pressure Element and Transmitter	Only with superheated Steam	±3%	Annual	1) Perform an annual inspection of the flow sensor orifice plates and check for wear and distortion beyond the OEMs specifications as a part of the annual re-calibration procedure 2) If a significant percentage of flow occurs at flow rates below the flow sensors minimum guaranteed full accuracy flow rate, both the flow and Btus may be undercounted. This can be addressed by installing a two meter manifold with the meters sized to cover the entire expected range of flow rates. Consult the flow meter provider for design and installation details
< 8"	*Flow Sensor:* Vortex Shedding Tube	Only with superheated Steam	±3%	Biennial	—

Table 3. Thermal Energy Meter Requirements for Hot Water

Btu Meter System Components	Btu Meter Field Accuracy	Re- Calibration Interval	Notes
Flow Sensor: In-line Ultrasonic Flow Tube (no strap-on) or Magmeter *Thermal Sensors:* Installed in thermowells *Btu Computer:* Automated real-time computation and totalizer	±3%	Biennial	No turbine or impellor based flow sensors

Table 4. Thermal Energy Meter Requirements for Air

Btu Meter System Components	Btu Meter Field Accuracy	Re-Calibration Interval	Notes
Flow Sensor: a) In-duct Differential Pressure Measuring Airflow Station b) Pitot Tube *Thermal Sensors:* Installed in the air flow stream *Btu Computer:* Automated real-time computation and totalizer	±3%	Annual	Clean and inspect orifices as a part of the annual calibration procedure

Table 5. Thermal Energy Meter Requirements for ~~Refrigerant~~Refrigerants

Btu Meter System Components	Btu Meter Field Accuracy	Re-Calibration Interval	Notes
Liquid Flow Sensor: Full Flow Ultrasonic (transit time) *Thermal Sensors:* RTD or Thermocouple Installed in thermowells *Btu Computer:* Automated real-time computation and totalizer	±3%	TBD	Care must be taken to avoid flashing of the hot liquid to vapor, which will affect the operation of expansion valves

G) Fuel Meters

In the event that one or more non-renewable fuels will be blended with one or more renewable fuels, the direct metering of each fuel is required.

Table 6. Fuel Meter Requirements for Natural Gas

Meter Type	Flow rate Range	Accuracy	Minimum Frequency of Calibration	Other
All Meters	2% ≤ Flowrate ≤ 100% Max DF Where Max DF is Maximum System Design Flow Rate	± 2%	Annual	See Notes

Notes:

1) *All diaphragm meters must conform to the current American National Standard Institute (ANSI) B109.2 standard*
2) *All rotary meters must conform to the current ANSI B109.3 standard*
3) *The default Higher Heating Value (HHV) for pipeline natural gas is 1,030 Btu per Standard Cubic Foot (SCF). Alternate HHVs may be proposed as documented by the fuel supplier*
4) *All volumetric measurements must be adjusted to SCF (i.e. they must be temperature and pressures corrected). Meter models that are auto pressure and temperature compensated will meet this requirement. Meters with a settable fixed value pressure compensation may be used if installed downstream of a pressure regulator. The applicant may propose and alternate method for converting the metered flow to SCF units*
5) *Thermal Diffusion Meters (TDM) are not approved*
6) *A pipeline gas meter furnished and installed as part of a dedicated gas line to the RTGU system by the site's gas utility will be accepted as an approved natural gas fuel meter*
7) *Submittal of a proposed meter other than as furnished by the site's gas utility should be accompanied by a list of utilities and/or distribution companies that have used the as-proposed meter either for billing or custody transfer.*

Table 7. Fuel Meter Requirements for Biogas

Btu Meter System Components	Btu Meter Field Accuracy	Recalibration & Inspection Frequency	Notes
Gas Flow Sensor: Full Flow Averaging Pitot Real time gas analyzer *Btu Computer:* Automated real-time computation and totalizer.	±3%	Annual	Both tuned laser or infrared based optical gas analyzer technologies are acceptable

H) Electric Meters

Electric (kWh) meters shall be revenue grade and shall:

1) Be certified as meeting American National Standard Institute (ANSI) Standard C12.20
2) Have a kW and kWh remote output signal with an output signal interval of not more than once per minute
3) Have either a non-resettable or password protected cumulative kWh register

I) Accuracy of Thermal and Fuel Metering

Thermal energy and fuel must be metered per the tables in 3(E) and 3(F) above, with a possible future modification per the issuance of the American Society for Testing and Materials (ASTM) Heat Meter Technology Standard WK37952 that is currently under development under the leadership of the United States Environmental Protection Agency (EPA).

J) Intermediate and Large, Solar Hot Water Systems

1) Major System Components

Intermediate and Large Solar Hot Water RTGUs include, but are not limited to, the following major components:

(a) A solar thermal energy collector system
(b) One or more unfired water storage tanks that supply water, pre-heated by solar energy only, to a primary (fired) heating system
(c) Heat exchanger(s) which transfer energy from the solar collector heat transfer fluid circulating loop to the volume of water in the pre-heat storage tank (not shown in Figure 2~~Figure 2~~ below)
(d) Electric motor driven pump(s) which circulate a heat transfer fluid in a closed loop between the solar collectors and the collector fluid-to-unfired storage tank heat exchanger
(e) Automatic pump controller(s) which start and stop the circulating pumps based on a pre-set temperature difference between the temperature of the un-fired storage tank and the temperature of the solar collectors

2) Meters

All Intermediate and Large solar hot water RTGUs must have Btu and kWh meters as shown in Figure 2~~Figure 2~~, Figure 3~~Figure 3~~,

Figure 4~~Figure 4~~, and Figure 5~~Figure 5~~.

3) Data Acquisition System(s) (DAS)

An eligible DAS must meet the requirements in Section 3(D) above record, store, and transmit time stamped Btu meter readings, and the run times of the collector heat transfer fluid circulating pump(s).

These are based on the generic configurations as shown in Figure 2~~Figure 2~~, Figure 3~~Figure 3~~,

Figure 4~~Figure 4~~, and Figure 5~~Figure 5~~. The Department will evaluate metering plans and submittals based on alternative configurations on a case-by-case basis.

Figure 2. Simplified Schematic of a ~~Typical~~Generic Intermediate Size~~, Evacuated Tube,~~ Solar Thermal RTGU

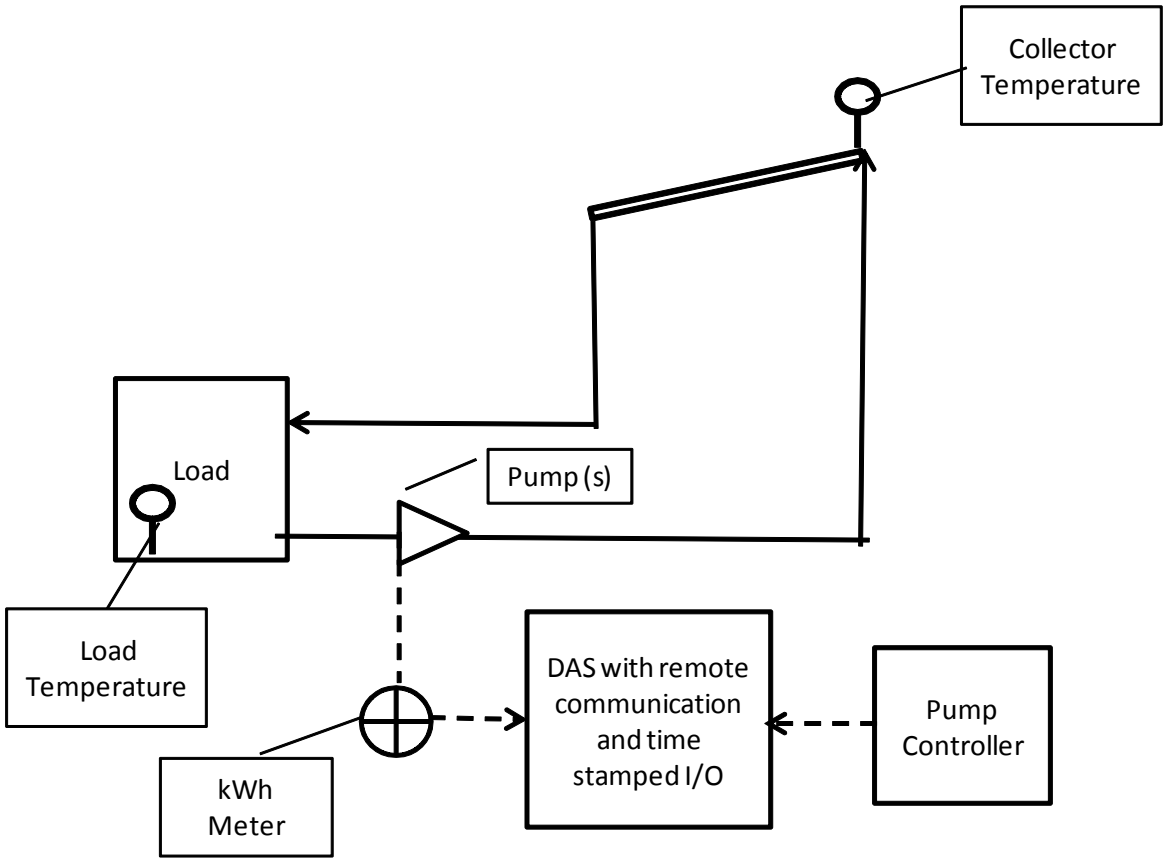

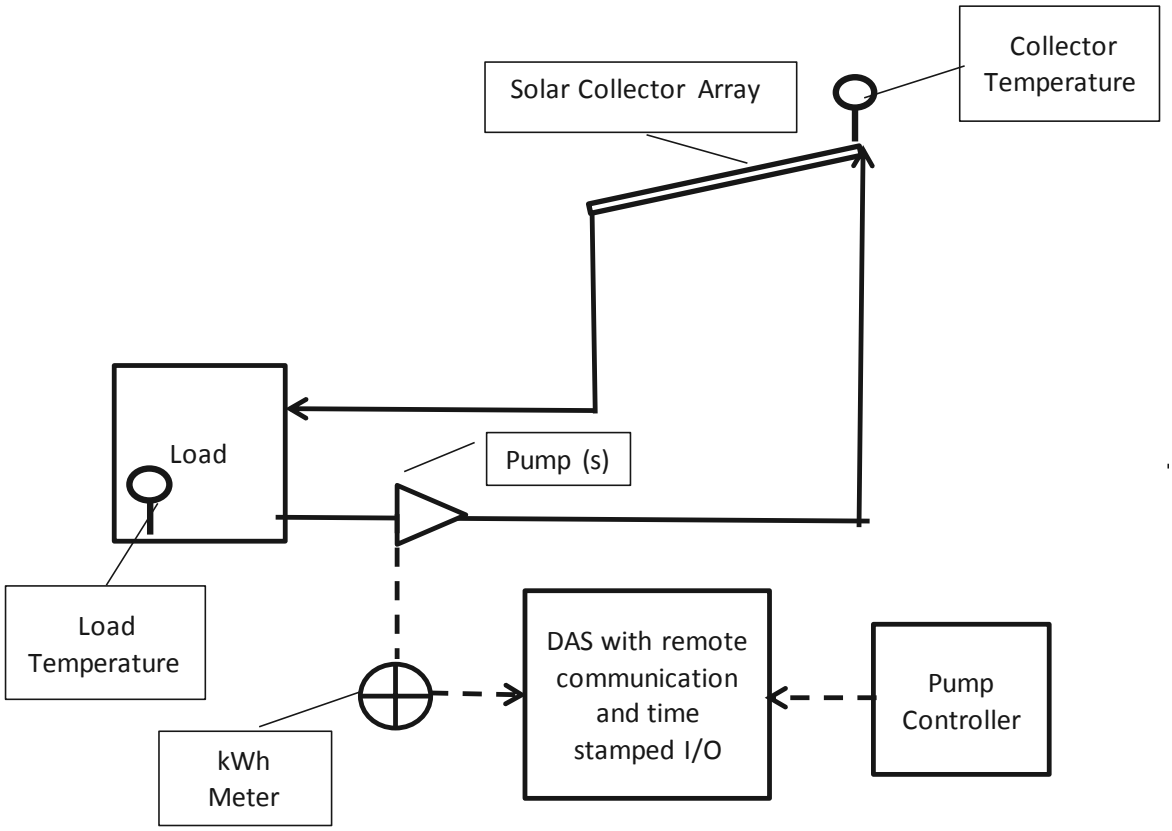

Figure 3. Location of Pressure Indicating Gauges Up and Downstream From the Collector Heat Transfer Circulating Pumps

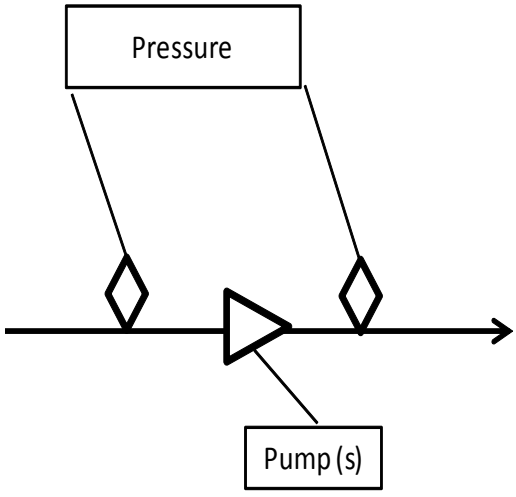

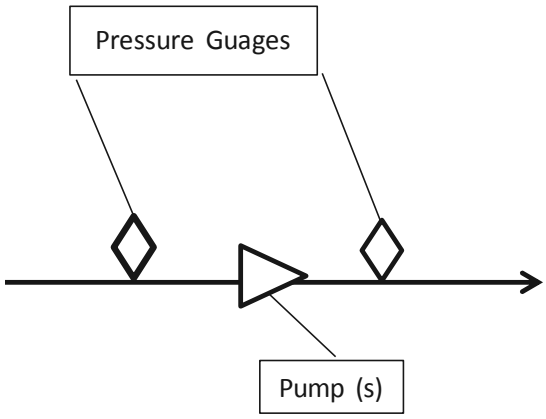

4) ~~AEC~~ Formula for Intermediate~~, Evacuated Tube,~~ Solar Thermal RTGUs

$E_{net,\ out}$ ~~AECs~~ = (~~UH~~RH – G/0.44) ~~* M~~

Note: All terms are the cumulative as-metered values. ~~.~~ Unless otherwise indicated, all units in MWh

~~Where~~:

$E_{net,\ out}$ = Net thermal energy output equivalent

RH = Net Renewable heat transferred to a

~~The rate of net~~ useful load

~~G = Grid supplied electrical energy~~

~~M = the current APS multiplier for flat plate evacuated tube solar hot water RTGU in the~~

~~Department's *Guideline on AEC Multipliers for Renewable Thermal Generation Units*~~

Determination of RH:

$$RH \text{ for any interval} = RH_{supply} - RH_{return}$$

~~Where~~:

RH_{supply} = The renewable thermal energy supplied from the RTGU to the useful thermal load(s)

RH_{return} = The renewable thermal energy returned from the useful thermal load the RTGU

~~The rate~~ that RH transferred to the load at any time is:

$$HTFF * HTF \text{ ~~density (lbs/gal)~~} * Cp * (HTFST - HTFRT) \text{ ~~)~~}$$

Where:

HTFF = HTF flowrate (gpm)

HTF = The density of the heat transfer fluid that circulates between the collector array and the loop to storage tank heat exchanger (not shown, lbs/gal)

~~HTFF = HTF flowrate (gpm)~~

Cp ~~HTF~~ = The constant pressure specific heat of the HTF (Btu/lb-°F)

HTFST = HTF supply temperature (°F)

HTFRT = HTF return temperature (°F)

~~G = Grid supplied electrical energy~~

~~M = the current APS multiplier for flat plate evacuated tube solar hot water RTGU in the Department's *Guideline on AEC Multipliers for Renewable Thermal Generation Units*~~

5) Metering of Intermediate~~, Evacuated Tube,~~ Solar Thermal RTGUs

Refer to Figure 2, Figure 3, and

Figure 4~~Figure 4~~ in Section 3(I)(3) and Section 3(I)(5).

(a) The ~~temperatures~~ systems heat transfer supply temperature (HTST) & heat transfer return temperature (HTRT) will be measured directly with thermal sensors located at the collector array and the grid supplied electrical energy (G) must be directly metered.
(b) The heat transfer fluid (HTF) flow will be indirectly metered using the manufacturer's performance data for the specific pump. After the RTGU is commissioned and the HTF flows are balanced and set, the following data will be obtained and recorded for each of the HTF circulating pumps:
    (i) The inlet and discharge pressure (psig) (for location of the pressure gauges, see Figure 3~~Figure 3~~)
    (ii) The average operating kW over a five minute interval, after full flow is established. A copy of a report issued by the pump supplier on company letterhead showing the system flow rate in pounds of HTF per hour for each pump is to be provided with the statement of qualification application. A copy of the pump performance curve showing the system pump design point (see

Figure 4~~Figure 4~~ below) must be included in the report.

(c) Based on the pump supplier's determination of the heat transfer flowrate (HTFF) for each pump, the flow for each pumped HTF loop will be:

HTF flow (lbs) = Sum for all loops

Where the flow for each pump = HTF flow (lbs/hr) * kWh/kW pump

Where:

kW pump = kW pump as recorded in (b) above.

OR

The installer may use an approved temporary flow meter to measure and record the system flow rate for each pumped HTF circulating loop

Figure 4. Example of a Typical Pump Curve with Showing the Design Operating Point

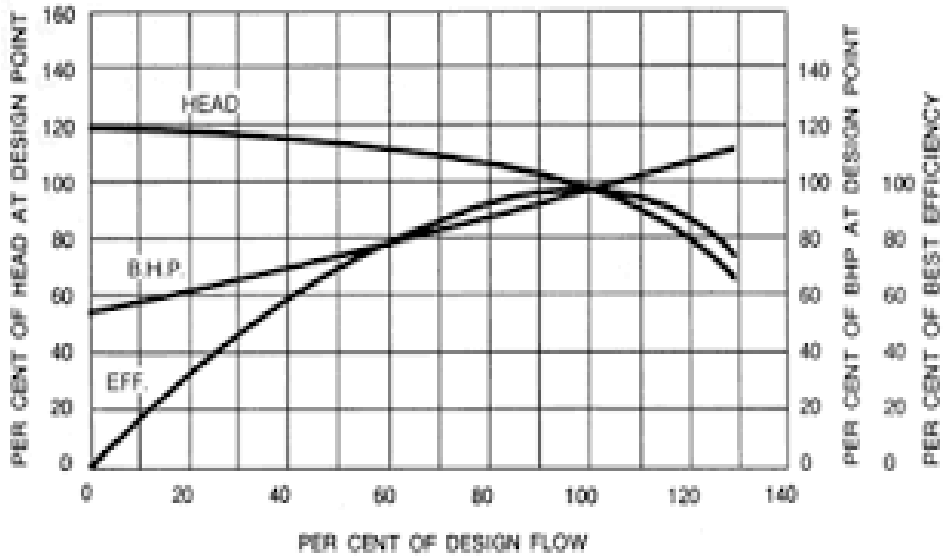

6) Metering of Large, Solar Thermal RTGUs

Figure 5. Simplified Schematic of a ~~Typical~~Generic Large~~, Evacuated Tube,~~ Solar Thermal RTGU

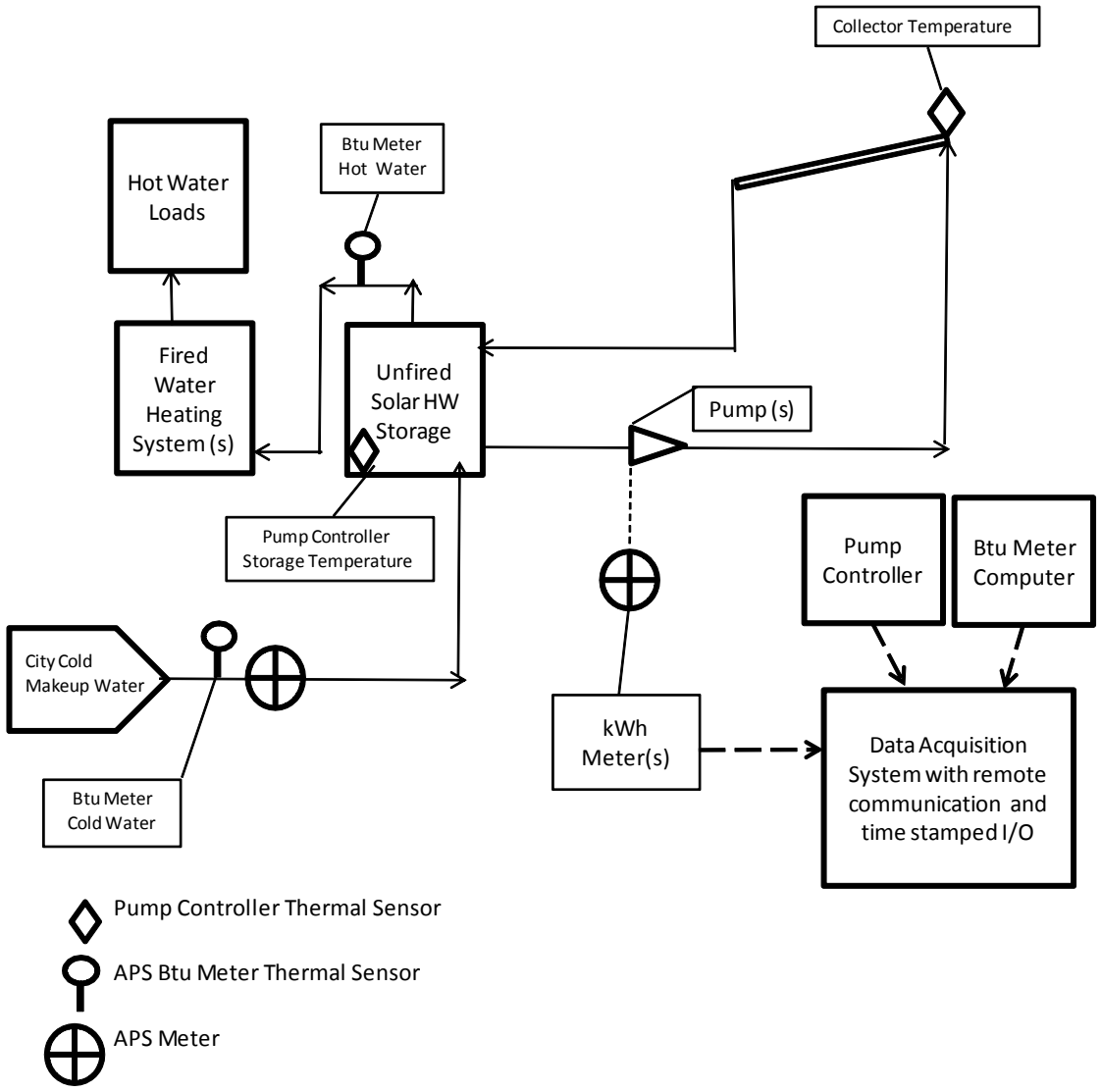

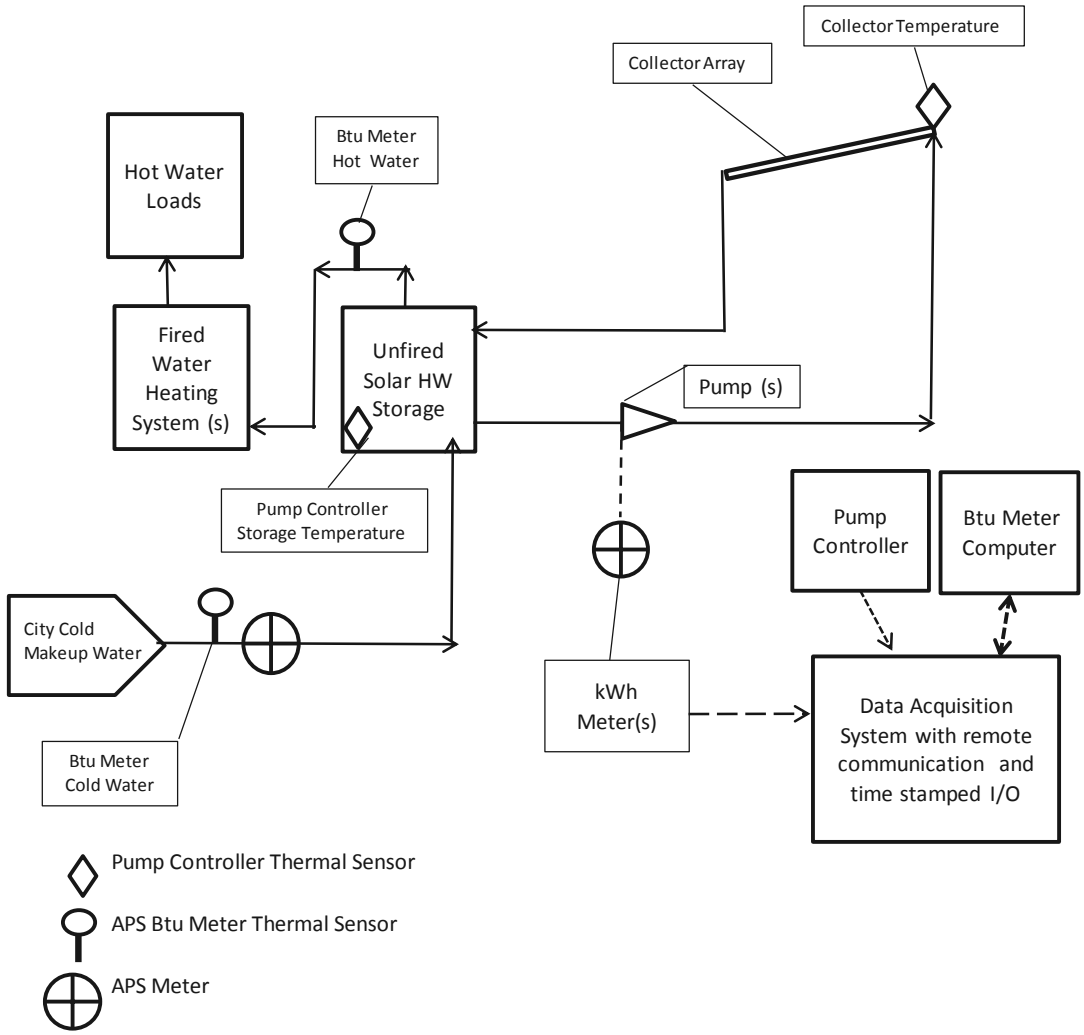

Note: System heat exchangers not shown for clarity

7) ~~AEC~~ Formula for Large~~,, Evacuated Tube,~~ Solar Thermal RTGUs

$$E_{net,\ out}\cancel{AECs} = (\cancel{UH}RH - G/0.44)\cancel{*\ M}$$

Note: All terms are the cumulative as-metered values. Unless otherwise indicated, all units in MWh

~~WhereThe renewable~~:

$E_{net, out}$ = Net thermal energy output equivalent

RH = Net Renewable heat transferred to a useful load

~~G = Grid supplied electrical energy~~

Conversion of site to source nonrenewable fuel per MWh grid electricity = G / (0.44)

~~M =over~~The rate that RH is transferred to the load at any ~~interval~~time is:

(CMWF * 8.34 (lbs/gal) * (TSHW – TCMW)) / 3~~,412,000~~.412E6 (Btu/MWh)

Where:

CMWF = City cold makeup water flow rate (gallons per minute)

TCMW = Temperature of the city cold makeup water supply (°F)

K) Transpired Solar Air Collector (TSAC) Systems

TSCAC RTGUs transfer solar energy to preheat the outside air supply to a heated space. Major System Components for both Intermediate and Large TSAC RTGUs include, but are not limited to, the following major components:

(a) Transpired Solar Air Collector (s)
(b) Ducting from collector to ventilation unit
(c) Bypass Air intake to ventilation (See Figure NN for components)
(d) ON/OFF Solar Air Collector Damper and ON/OFF Bypass Air Damper
(e) Automatic Controls
(f) Ventilation Unit (Typically an existing Air Handling Unit, Make-Up Air Unit, In-Line Supply Fan (See Figure NN)

L) Intermediate, TSAC RTGUs

1) Data Acquisition System(s) (DAS)

An eligible DAS must meet the requirements in Section 3(D) above and record, store, and transmit time stamped Btu meter readings and the run times of the collector heat transfer fluid circulating pump(s).

These are based on the generic configurations as shown in Figure 2~~Figure 2~~, Figure 3~~Figure 3~~,

Figure 4~~Figure 4~~, and Figure 5~~Figure 5~~. The Department will evaluate metering plans and submittals based on alternative configurations on a case-by-case basis.

2) Metering

Figure 6. Simplified Schematic of a Generic, Intermediate TSAC RTGU

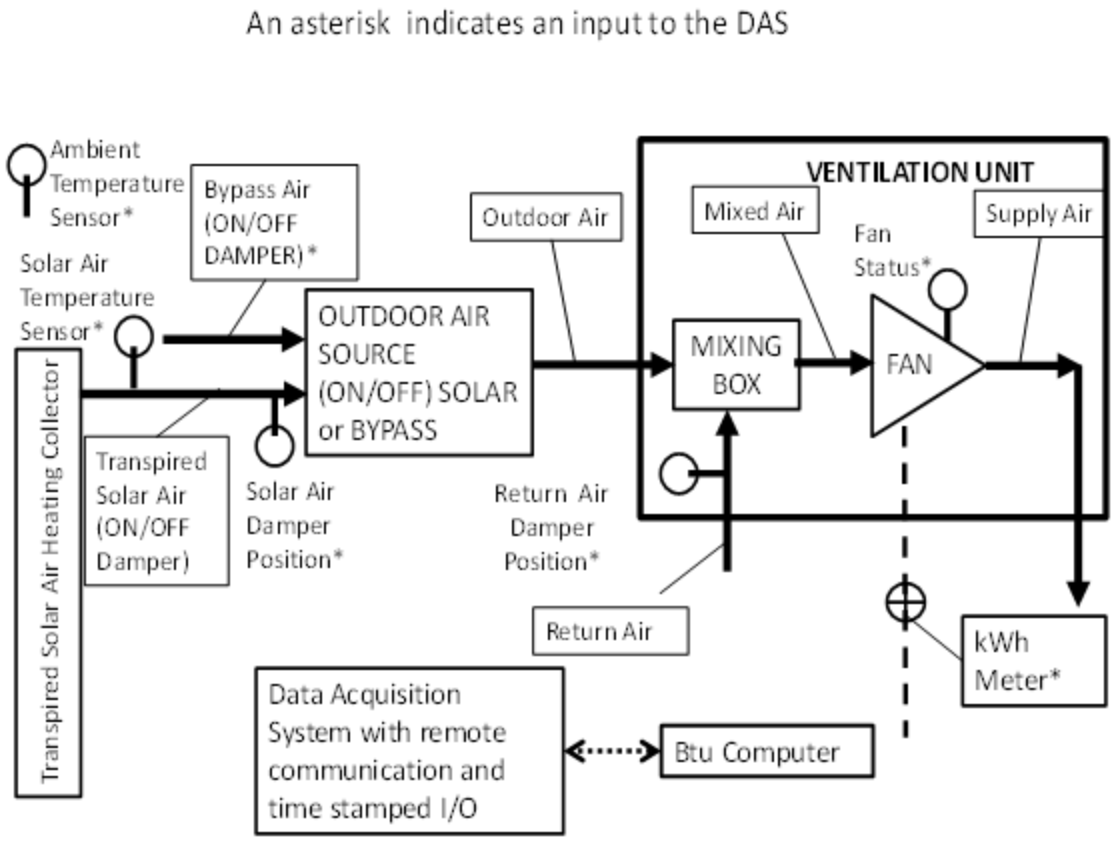

3) ~~AEC Formula for~~ Intermediate, TSAC RTGU

$$E_{net,\ out} = RH * G/0.44$$

~~Where~~:

$E_{net,\ out}$ = Net thermal energy output equivalent

RH = Renewable heat transferred from the ambient air to a useful and is not directly metered

~~G = Grid supplied electrical energy~~

Conversion of site to source nonrenewable fuel per MWh grid electricity = G / (0.44)

Determination of RH

RH over any interval = $A*D*Cp*(T_{TSA} - T_{AMBIENT})/3.412E6$ (Btu/MWh)

~~Where:~~ ~~TSHW~~

A = Air Flow (cubic feet)

D= Density of Air (lbs/cf)

Cp = Specific Heat Capacity of Air (Btu/lb -°F)

T_{TSA} = Temperature of the ~~solar~~ hot ~~water supply to~~air generated by the ~~fired~~TSAC (°F)

$T_{AMBIENT}$ = Ambient Air Temperature (°F)

The TSAC RTGU hot ~~water~~air output flow rate is not directly metered. Whenever the TSAC RTGU by-pass damper is open and the existing system ventilation fan is running the outside air which is pre-heated by the TSAC RTGU is supplied to the space heating ~~system (°F)~~load.

The TSAC RTGU hot air output flow rate is indexed to~~G = Grid supplied electrical energy~~ ~~M =~~ the ~~current multiplier~~position of the return air damper(s) which sets the percentage of outside air supplied to the load that is mixed with the return air from the heated space.

During the initial test and balance section of the initial commissioning of the TSCA RTGU, the supplier will develop and provide a certified lookup table which indexes the flowrate of TSCA generated pre-heated air to the position of the return air damper from 0% to 100% open in increments of 5%. In order

to maintain an approved status for a TSAC RTGU, the table will be re-calibrated on site, revised as needed and provided to the Department on an annual basis.

The rate of renewable heat transfer to a useful load at any time:

$$= D^* Cp * (T_{TSA} – T_{AMBIENT}) * DP_{SAH} *OAF * F_{STATUS}$$

~~Where:~~

~~flat plate evacuated tube solar hot water~~D= Density of Air (lbs/cf)

Cp = Specific Heat Capacity of Air (Btu/lb -°F}

T_{TSA} = Temperature of the hot air generated by the TSAC (°F)

$T_{AMBIENT}$ = Ambient Air Temperature (°F)

DP_{SAH} = TSAC RTGU By-pass damper position, (OPEN = 1, CLOSED = 0)

OAF = Flow rate of pre-heated air supplied by the TSAC RTGU as determined by the position of the return air damper

F_{STATUS} = Ventilation Unit Fan Status (ON = 1, OFF = 0)

M) Large, TSAC RTGUs ~~in the Department's *Guideline on*~~

Figure 7. Simplified Schematic of a Generic, Large, TSAC RTGU

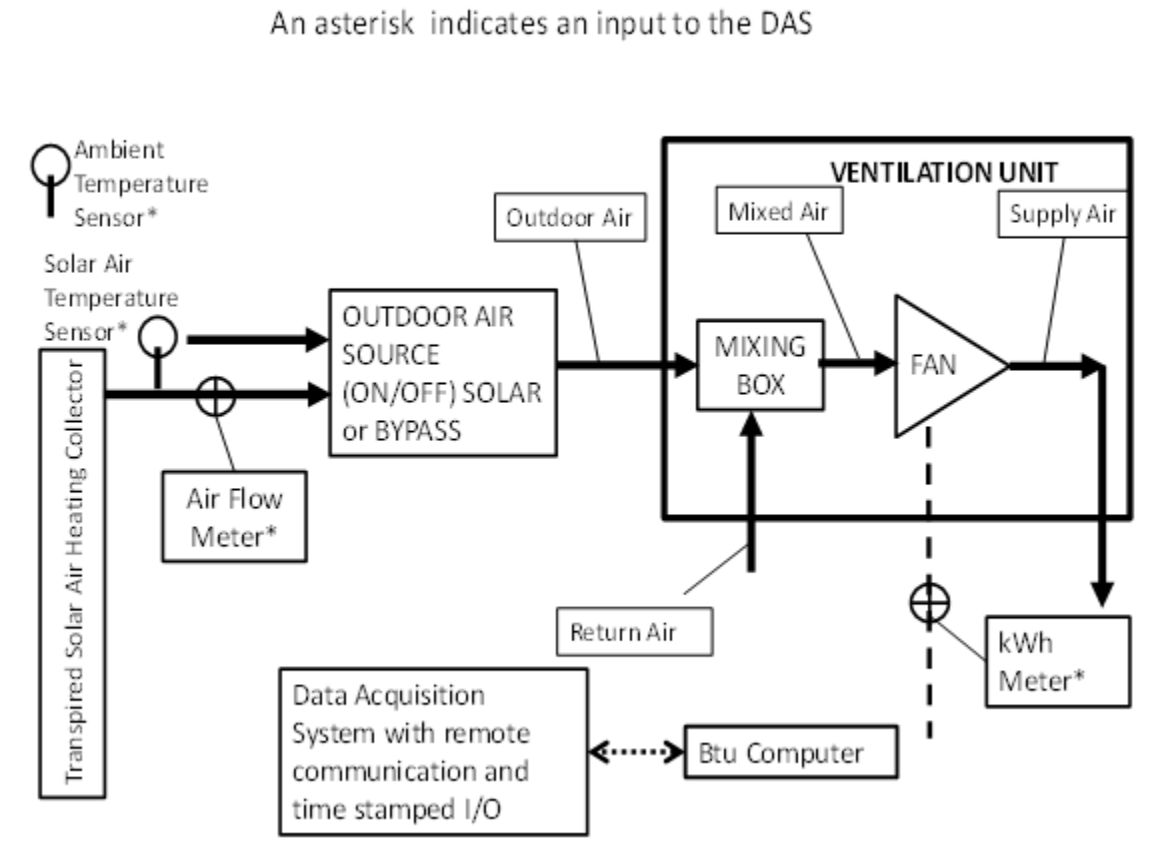

1) ~~AEC *Multipliers*~~Formula for Intermediate, TSAC RTGUs

$$E_{net,\ out} = RH^* G/0.44$$

~~Where:~~

$E_{net,\ out}$ = Net thermal energy output equivalent

RH = Renewable ~~*Thermal Generation Units*~~ heat transferred from the ambient air to a useful and is not directly metered

~~G = Grid supplied electrical energy~~

Conversion of site to source nonrenewable fuel per MWh grid electricity = G / (0.44)

Determination of RH

$$RH \text{ over any interval} = A^*D^*Cp^* (T_{TSA} - T_{AMBIENT})/3.412E6 \text{ (Btu/MWh)}$$

~~Where:~~

A = Air Flow (cubic feet)

D= Density of Air (lbs/cf)

Cp = Specific Heat Capacity of Air (Btu/lb -°F}

T_{TSA} = Temperature of the hot air generated by the TSAC (°F)

$T_{AMBIENT}$ = Ambient Air Temperature (°F)

~~K)~~N) Intermediate and Large, Air Source Heat Pump Systems

1) Direct Expansion (DX), Air Source Heat Pumps (ASHPs)

Both Intermediate and Large DX ASHPs will typically be a self-contained unit with a warm forced air output. The major components of a typical DX ASHP include, but are not limited to the following:

(a) Controls
(b) A closed refrigerant sub-system including:
  (i) Compressor(s)
  (ii) Evaporator(s)
  (iii)Condenser(s)

(iv) JT expansion valves
(v) Refrigerant side tubing, instruments and control devices

(c) An air side sub-system including:
(i) Fans
(ii) Louvers and dampers
(iii) Filters
(iv) Air flow related internal ducting, instruments, and control devices

~~2)~~

2) Metering for Intermediate, DX ASHPs

~~Metering for Intermediate, DX ASHPs~~

Figure 8. Metering Diagram for an Intermediate, DX ASHP

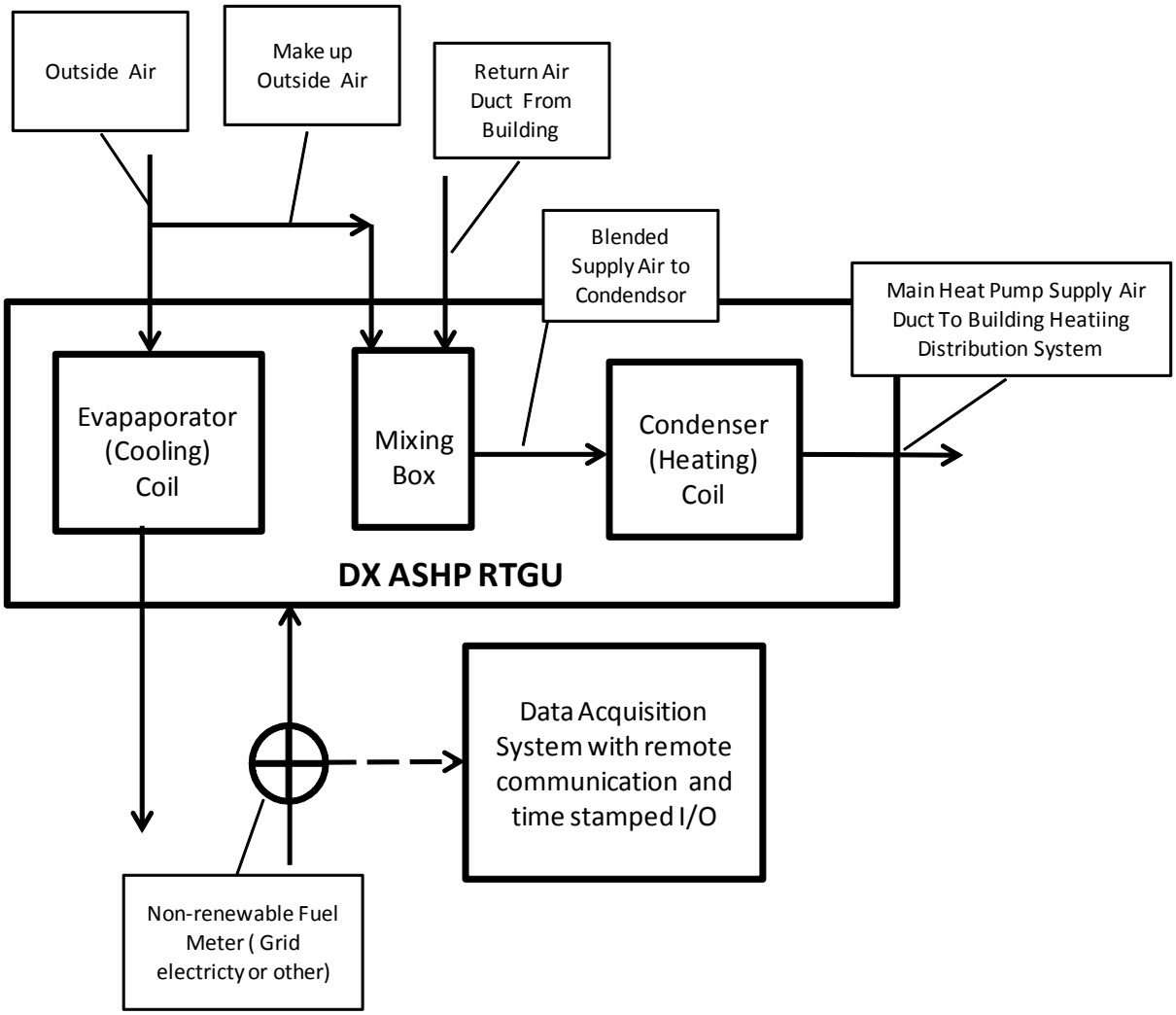

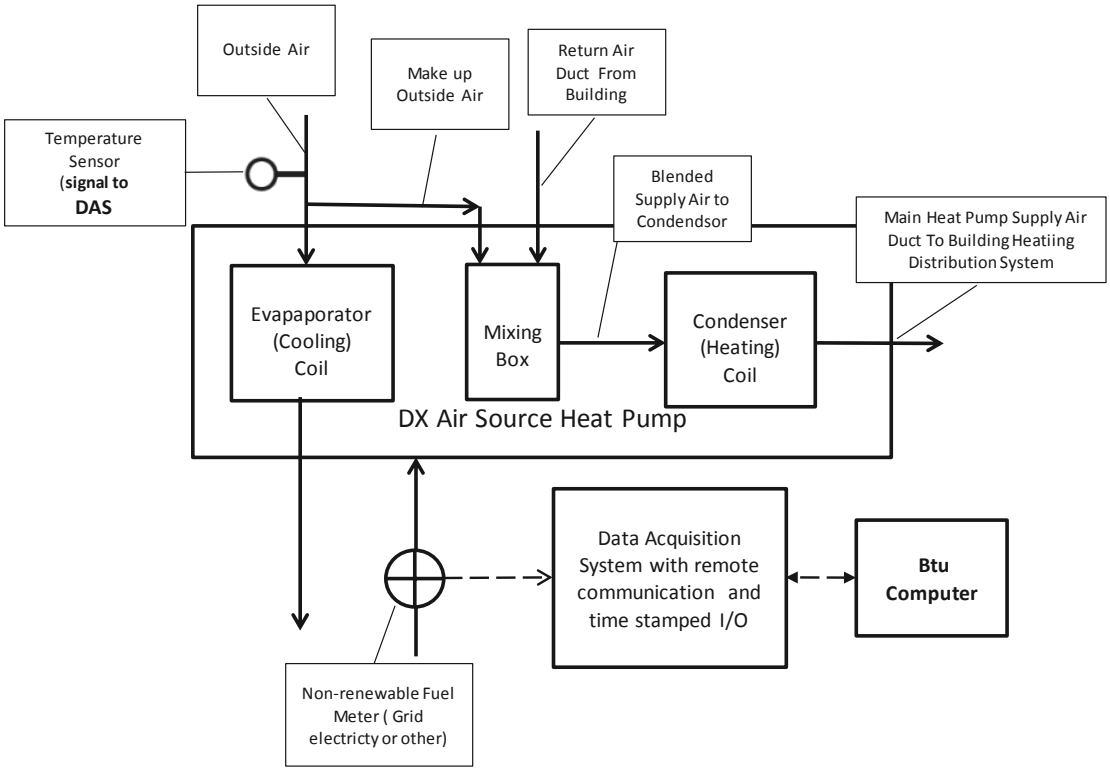

3) Formula for Intermediate, DX ASHPs

$$E_{net,\ out}\ \cancel{AECs} = ((\cancel{COPw * NRF) - NRF}\ COP_{OAT} * G) - G/0.44)\ \cancel{* M}$$

Note: All terms are the cumulative as-metered values. Unless otherwise indicated, all units ~~*in MWh*~~ *in MWh*

Where:

$E_{net, out}$ = Net thermal energy output equivalent

~~COPw~~COP_{OAT}, = The ~~climate weighted heating~~ book value of the coefficient of performance ~~(COP) for the typical meteorological year (TYM) heating season~~at the outside air temperature as ~~provided by the original equipment manufacturer~~

~~NRF = The non-renewable fuel (e.g. grid electricity, or other) consumed by~~measured at the RTGU.

~~M = the current multiplier for ASHPs in the Department's *Guideline on AEC Multipliers for Renewable Thermal Generation Units*~~

~~When the non-renewable fuel is grid electricity:~~

~~NRF = G / (0.44 * F)~~

~~Where:~~

G = Grid supplied electrical energy

~~F = The factor applied~~Conversion of site to ~~the 0.44~~source nonrenewable fuel per MWh grid electricity = G / (0.44)

~~M = the current multiplierefficiency to account for the improvement in the ISO-NE grid efficiency during life~~

~~of a heat pump unit as projected in the Massachusetts Global Warming Solutions Act~~The COPOAT for each five minute interval will be determined by the use of a lookup table provided by the RTGU's original equipment manufacturer (OEM) on their letterhead. The table will show the COP of the RGTU for each 10 degree increment between 5 and 50 deg. F.

The table is to be constructed as follows:

i) The AHRI rating performance data is to be used.
ii) The AHRI rating data is subdivided into 15 deg. intervals using a linear interpolation.
iii) The AHRI rating data is extended to 60 deg. F by linear interpolation.
iv) Extension of the table below the lowest ambient temperature shown in the AHRI rating cannot be done by linear interpolation but must instead be developed and submitted by the OEM along with sufficient narrative detail to permit a review

Note: The COP_{OAT} table will be used by the independent verifier together with the directly measured outside air temperature to compute the AECs for each operating month.

4) Metering of Large, DX ASHPs

Figure 9. Metering Diagram for a Large, DX ASHP

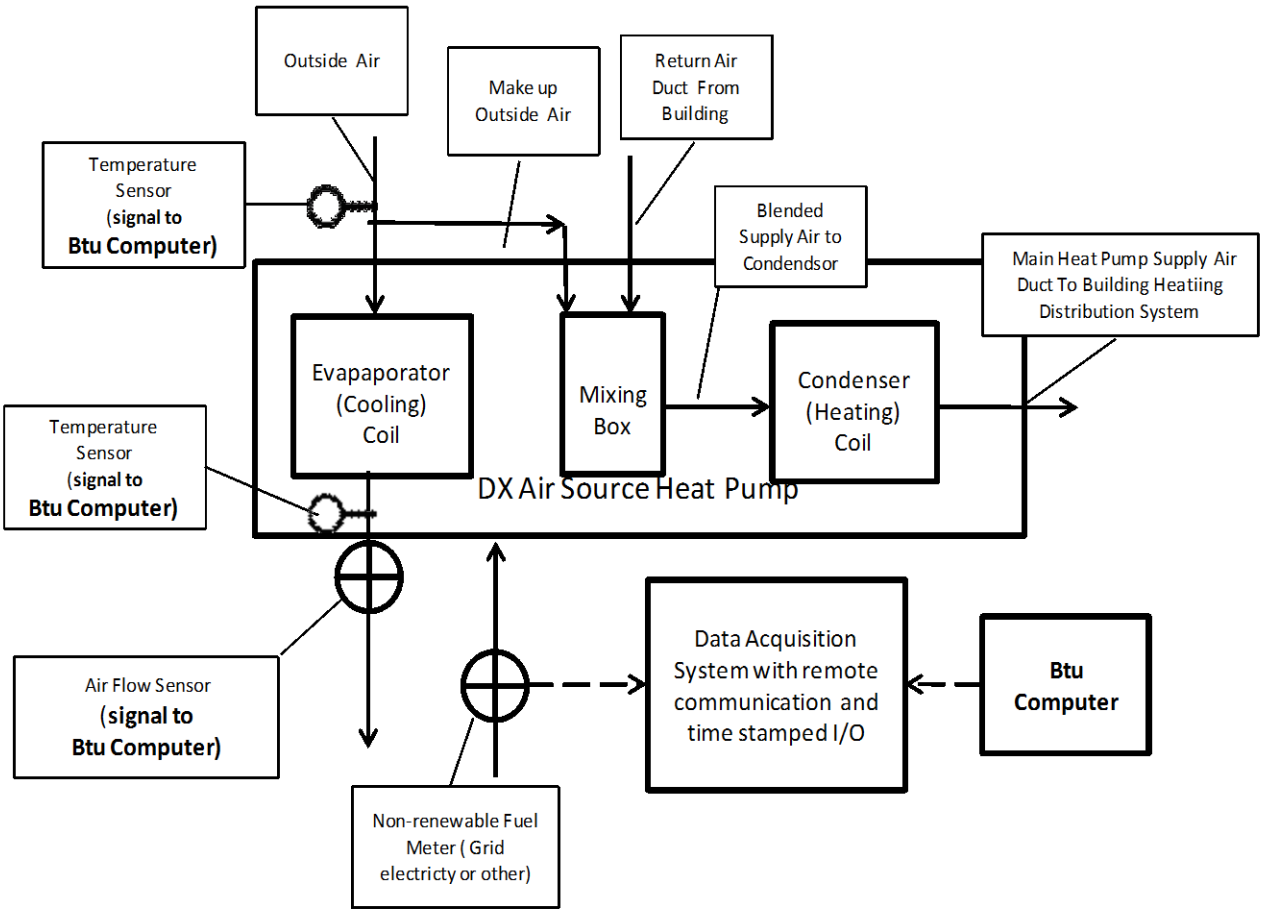

~~*Note: Only the components directly related to either the required APS metering or otherwise related to the terms of the AECs formula for DX ASHPs are shown*~~

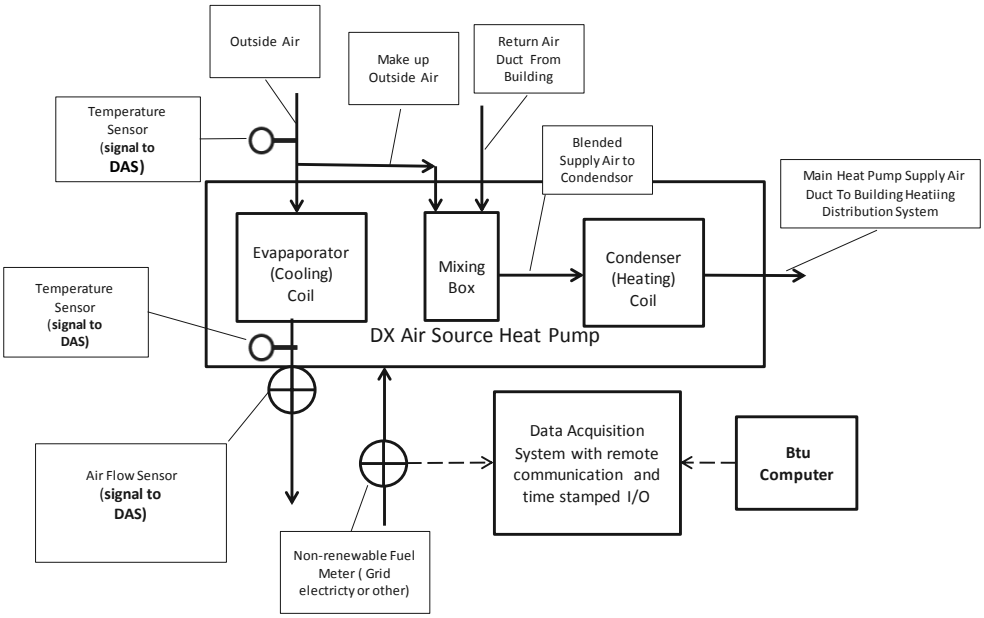

Note: Only the components directly related to either the required APS metering or otherwise related to the terms of the AECs formula for DX ASHPs are shown

5) ~~AEC~~ Formula for Large, DX ASHPs

$E_{net, out}$~~AECs~~ = = (RH * - G/0.44)~~M~~

Note: All terms are the cumulative as-metered values. ~~.~~ Unless otherwise indicated, all units in MWh

Where:

$E_{net, out}$ = Net thermal energy output equivalent

RH = Renewable heat transferred from the ambient air to the system and is directly metered

G = Grid supplied electrical energy

Conversion of site to source nonrenewable fuel per MWh grid electricity = G / (0.44)

~~M = the current multiplier for~~ The rate of renewable heat ~~generated at any time~~transfer to a useful load is:

(EAF) * (Cp) * (ETA-LTA) / 3.412E6 (Btu/MWh)

Where:

EAF = Outside air flow rate (lbs/hr) through the Evaporator(s)

Cp = Specific heat of the outside air (Btu / lb-deg F)

ETA = Temperature of the outside air entering the evaporator section (°F)

LTA = Temperature of the outside air leaving the evaporator section (°F)

6) Variable Refrigerant Flow (VRF), ASHPs

An Intermediate or Large VRF ASHP will typically be a split system consisting of an outdoor unit which generates hot ~~liquid~~ refrigerant coupled with an indoor distribution system connected with one or more air handler or fan coil terminal units. A typical VRF ASHP includes, but is not limited to the following principal components:

(a) Controls
(b) A closed refrigerant sub-system including:
    (i) Compressor(s)
    (ii) Evaporator(s)
    (iii)Condenser(s)
    (iv) Refrigerant expansion valves
    (v) Tubing, instruments and control devices
(c) An air side sub-system including:

(i) Air handler unit(s)
(ii) Fan coil terminal units

7) Metering for Intermediate, VRF AHSPs

Figure 10. Metering Diagram for an Intermediate, VRF ASHP

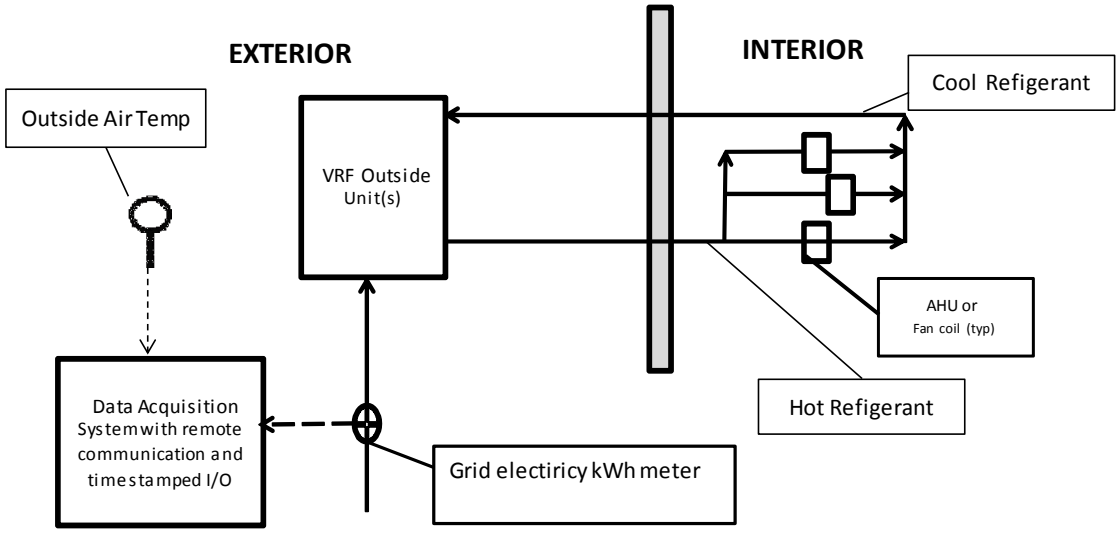

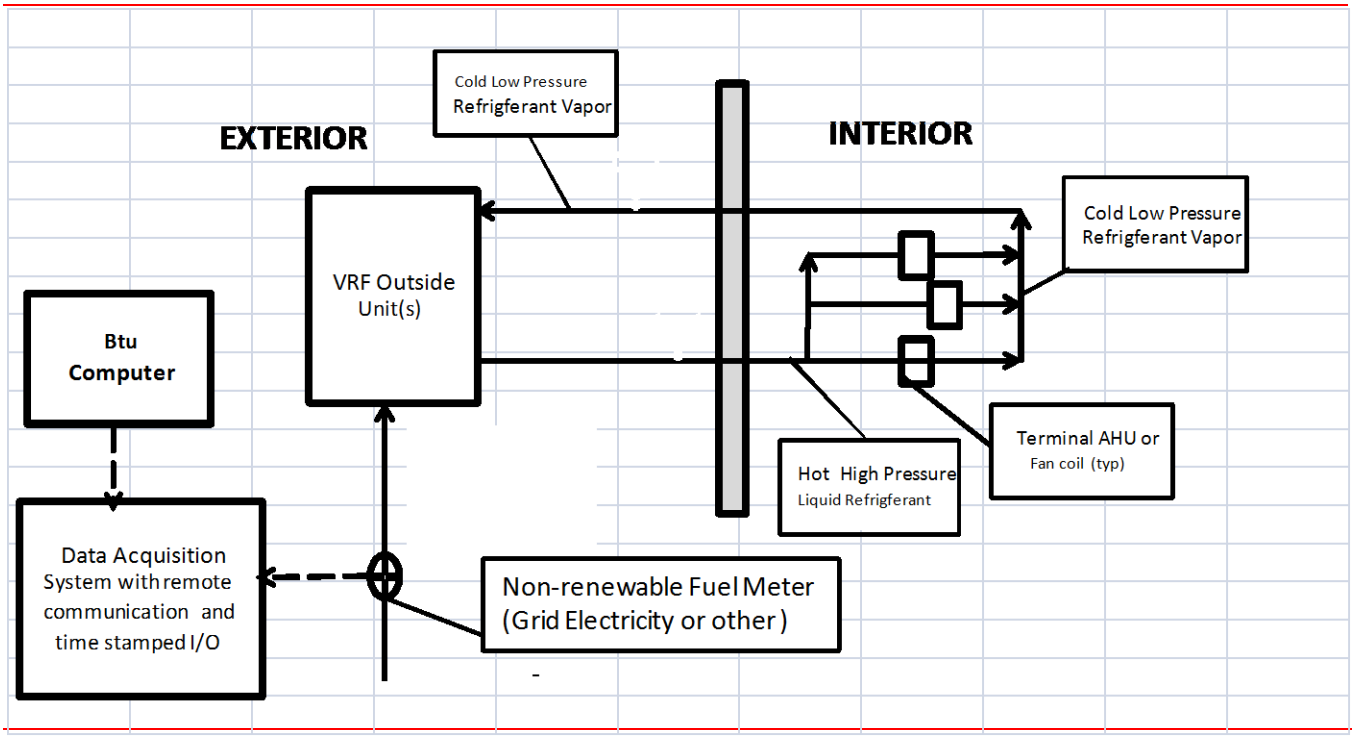

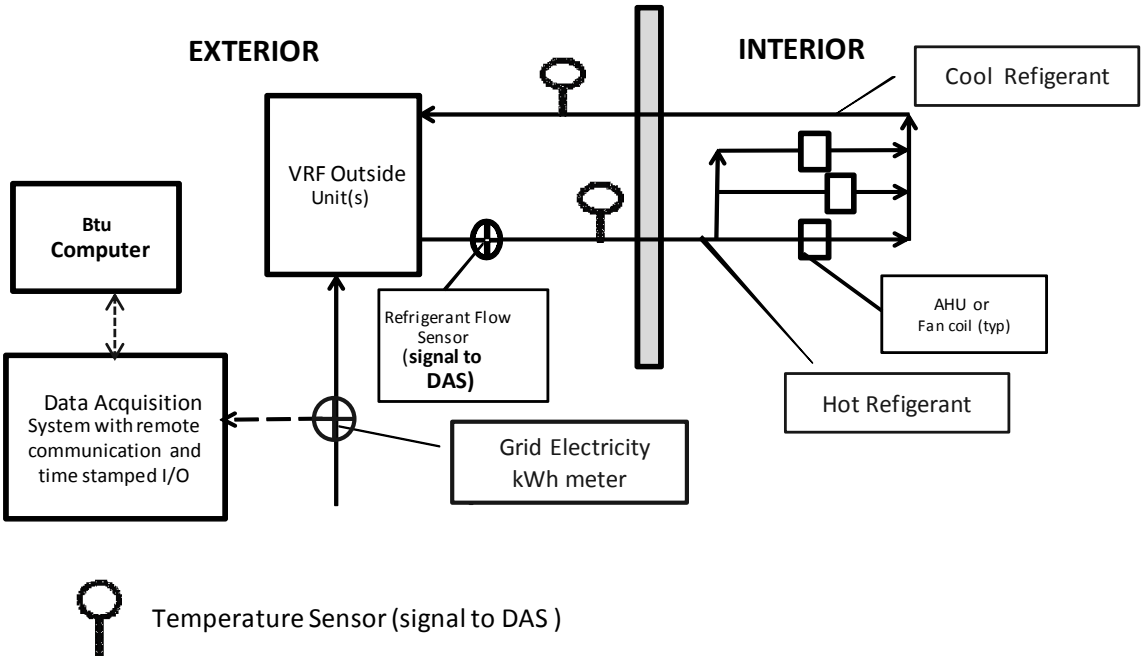

Note: Only the components directly related to either the required APS metering or otherwise related to the terms of the AECs formula for VRF ASHPs are shown.

8) ~~AEC~~ Formula for Intermediate, VRF ASHPs

$E_{net,\ out}$~~AECs~~ = ((~~COPw * NRF) – NRF~~COP_{OAT} * G) – G/0.44) ~~* M~~

~~*Note: All terms are the cumulative as-metered values. Unless otherwise indicated, all units in MWh*~~

~~Where:~~

~~*Note: All terms are the cumulative as-metered values. Unless otherwise indicated, all units in MWh*~~

~~Where:~~

~~COPw =~~

$E_{net, out}$ = Net thermal energy output equivalent

COP_{OAT} = The ~~climate weighted heating~~ book value of the coefficient of performance ~~(COP) for the typical meteorological year (TYM) heating season~~at the outside air temperature as measured at the RTGU

~~G = Grid supplied electrical energy~~

Conversion of site to source nonrenewable fuel per MWh grid electricity = G / (0.44)

The COP_{OAT} for each five minute interval will be determined by the use of a lookup table provided by the RTGU's original equipment manufacturer (OEM) on their letterhead. The table will show the COP of the RGTU for each 10 degree increment between 5 and 60 deg. F.

The table is to be constructed as follows:

i) The AHRI rating performance data is to be used.
ii) The AHRI rating data is subdivided into 15 deg. intervals using a linear interpolation.
iii) The AHRI rating data is extended to 60 deg. F by linear interpolation.
iv) Extension of the table below the lowest ambient temperature shown in the AHRI rating cannot be done by linear interpolation but must instead be developed and submitted by the OEM along with sufficient narrative detail to permit a review.

~~M = the current multiplier for ASHPs in the Department's Guideline on AEC Multipliers for Renewable Thermal Generation Units~~

~~provided by the original equipment manufacturer~~

~~*NRF =*~~*Note: The ~~directly metered, non-renewable fuel (e.g. grid electricity, or other) consumed~~COP_{OAT} table will be used by the ~~RTGU.~~*

~~*When*~~*independent verifier together with the ~~non-renewable fuel is grid electricity:~~*

~~*NRF = G / (0.44 * F)*~~

~~*G = Grid supplied electrical energy*~~

~~*F = The factor applied*~~*directly measured outside air temperature to compute the ~~0.44 grid efficiency to account~~AECs for ~~the improvement in the ISO-NE grid efficiency during life of a heat pump unit as projected in the Massachusetts Global Warming Solutions Act~~each operating month*

9) Metering for Large, VRF ASHPs

~~4)1)~~

~~M = the current multiplier for ASHPs in the Department's *Guideline on AEC Multipliers for Renewable Thermal Generation Units*~~

~~Metering for Large, VRF AHSPs~~

Figure 11. Metering Diagram for a Large, VRF ASHP

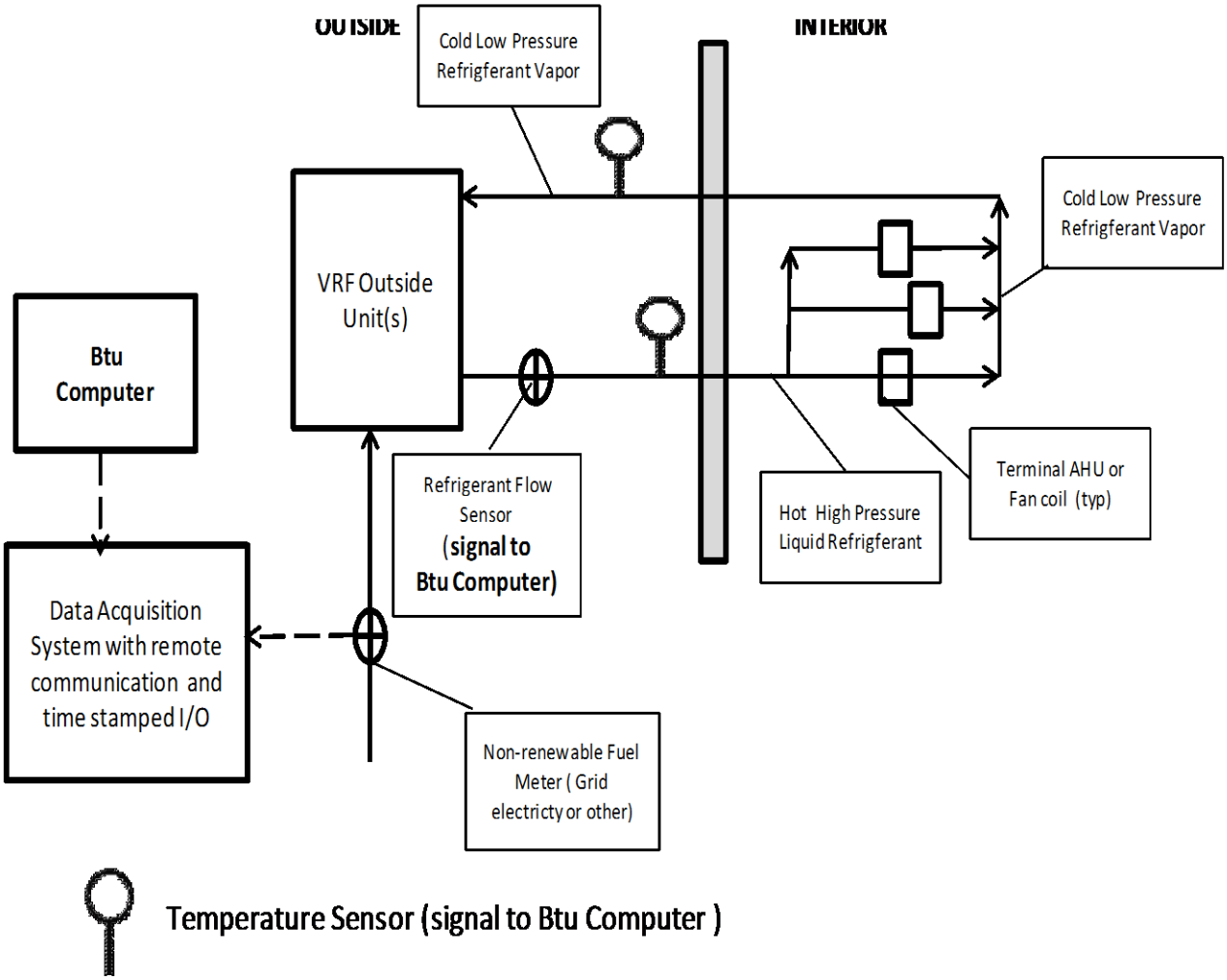

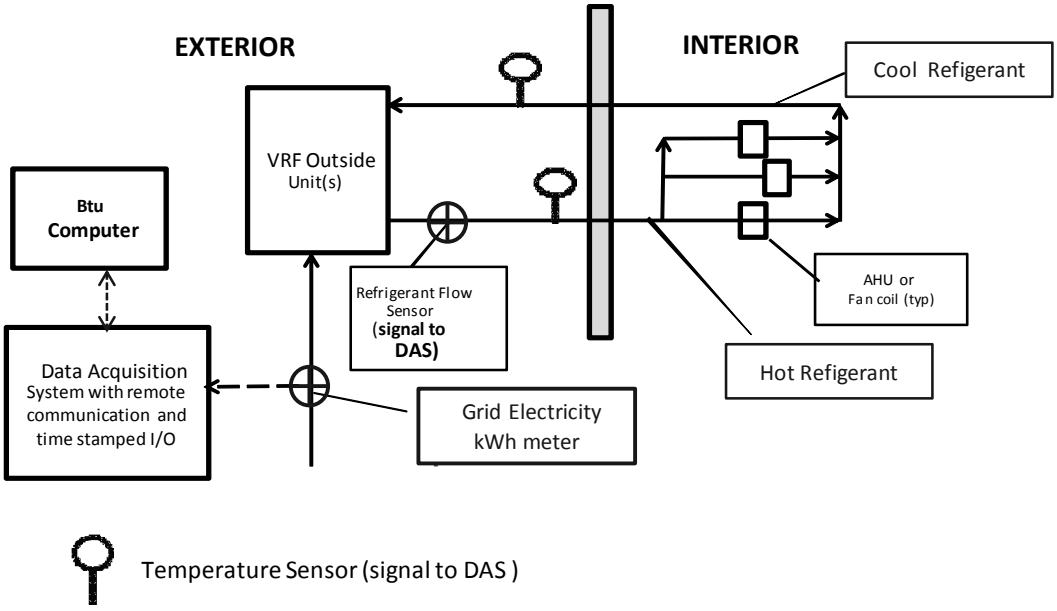

Note: Only the components directly related to either the required APS metering or otherwise related to the terms of the AECs formula for VRF ASHPs are shown.

~~9)~~10) ~~AEC~~ Formula for Large, VRF ASHPs

$$E_{net,out}{}_{AEC} = (RH - G/0.44) * M$$

Note: All terms are the cumulative as-metered values. ~~.~~ Unless otherwise indicated, all units in MWh

Where:

$E_{net,\ out}$ = Net thermal energy output equivalent

RH = Renewable heat transferred from the ambient air to the system and is directly metered

~~G = Grid supplied electrical energy~~

Conversion of site to source nonrenewable fuel per MWh grid electricity = G / (0.44)

~~M = the current multiplier for ASHPs in the Department's *Guideline on AEC Multipliers for Renewable Thermal Generation Units*~~

Determination of RH:

$$RH \text{ for any interval} = RH_{supply} - RH_{return}$$

~~Where~~:

RH_{supply} = is the renewable thermal energy supplied from the RTGU to the useful thermal load(s)

RH_{return} = is the renewable thermal energy returned from the useful thermal load the RTGU

The rate of ~~renewable~~net renewable heat ~~generated at any time~~transfer to a useful load is:

(SRF) * (Cp) * (RST-RRT) / 3.412E6 (Btu/MWh)

Where:

SRF = Supply refrigerant flow (lbs/hr)

Cp = Specific heat of the refrigerant supply (Btu/lb-deg F)

RST = Refrigerant supply temperature (°F)

RRT = Refrigerant return temperature (°F)

Note: If the density and the Cp of the RTGU refrigerant ~~varies~~vary significantly as a function of the refrigerant temperature, the integration of this value over time will be done by the Btu computer software engine in time steps of less than or equal to five minutes each using a look up table or function as provided by the supplier of the refrigerant.

~~L)~~O) Intermediate and Large, Ground Source Heat Pump Systems

A typical GSHP includes, but is not limited to the following major components:

(a) Controls
(b) A closed refrigerant sub-system including:
  (i) Compressor(s)
  (ii) Evaporator(s)
  (iii) Condenser(s)
  (iv) Refrigerant expansion valves
  (v) Tubing, instruments and control devices
(c) An air side sub-system including:
  (i) Fans
  (ii) Louvers and dampers
  (iii) Filters

(iv) Air flow related internal ducting, instruments, and control devices

(d) A well field

(e) A well field to heat pump circulating water loop including pump(s), piping, instruments and control devices

Figure 12. Metering Diagram for an Intermediate GSHP

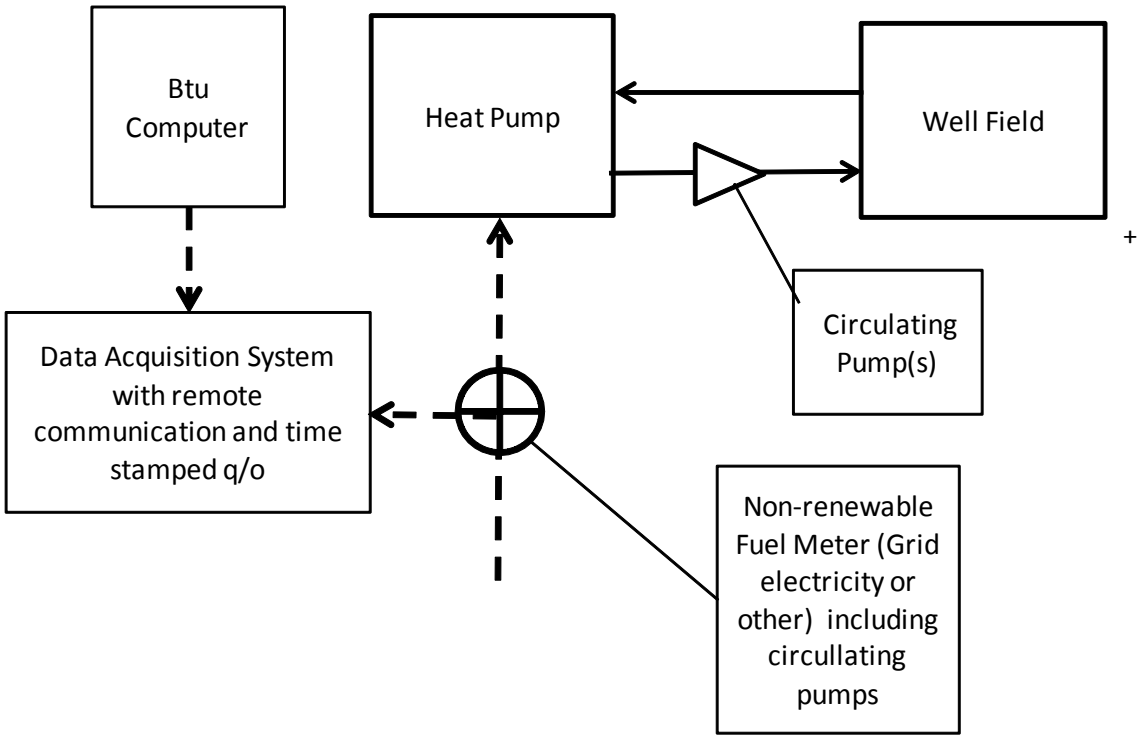

~~*Note: Only the components directly related to either the required APS metering or otherwise related to the terms of the AECs formula for an Intermediate size GSHPs are shown.*~~

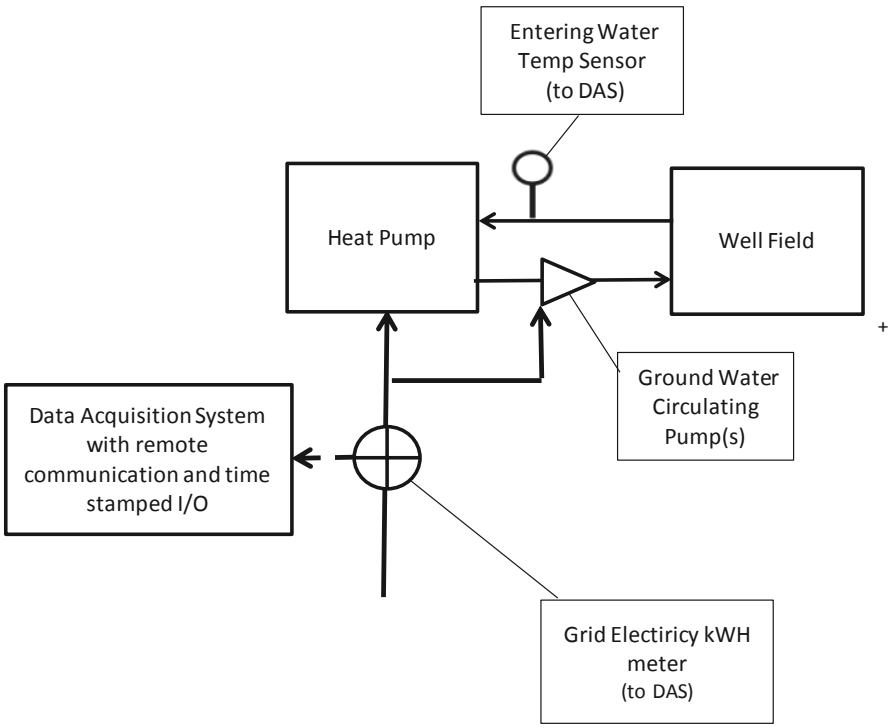

Note: Only the components directly related to either the required APS metering or otherwise related to the terms of the AECs formula for an Intermediate size GSHPs are shown.

1) ~~AEC~~ Formula for Intermediate, GSHPs

$$E_{net,out}{}^{AECs} = ((COPw * NRF) - NRF COP_{EWT} * G) - G/0.44) * M$$

Note: All terms are the cumulative as-metered values. ~~.~~ Unless otherwise indicated, all units in MWh

Where:

$E_{net, out}$ = Net thermal energy output equivalent

~~COPw~~COP_{EWT} = The ~~climate weighted heating~~ book value of the coefficient of performance ~~(COP) for the typical meteorological year (TYM) heating season~~at the temperature of the entering water temperature as ~~provided by the original equipment manufacturer~~ measured at the RTGU.

~~NRF = The directly metered non-renewable~~G = Grid supplied electrical energy

Conversion of site to source nonrenewable fuel ~~(e.g.~~per MWh grid electricity~~, or other)~~

~~consumed by the RTGU~~

~~*Note: Any NRF consumed by the GSHP to well field circulating pumps must be directly metered and included in the total NRF.*~~

~~When the non-renewable fuel is grid electricity:~~

~~NRF~~ = G / (0.44~~ * F~~)

~~M = The current multiplier for GSHPs in the Department's *Guideline on AEC Multipliers for Renewable Thermal Generation Units*~~

The COPEWT for each five minute interval will be determined by the use of a lookup table provided by the RTGU's original equipment manufacturer (OEM) on their letterhead. The table will show the COP of the RGTU for each 10 degree increment in the entering water temperature between 32 and 80 deg. F.

The table is to be constructed as follows:

i) The AHRI rating performance data is to be used.
ii) The AHRI rating data is subdivided into 15 deg. intervals using a linear interpolation.
iii) The AHRI rating data is extended to 80 deg. F by linear interpolation.
iv) Extension of the table below the lowest entering water temperature shown in the AHRI rating cannot be done by linear interpolation but must instead be developed and submitted by the OEM along with sufficient narrative detail to permit a review

~~Where:~~

~~G = Grid supplied electrical energy~~

~~F = The factor applied to the current 0.44 ISO-NE marginal grid efficiency to account for the improvements during life of a heat pump unit as projected in the Massachusetts Global Warming Solutions Act~~

Note: The COP_{EWt} table will be used by the independent verifier together with the directly measured entering water temperature to compute the AECs for each operating month

2) Metering for Large, GSHPs

~~1) Metering of Large, GSHPs~~

Figure 13. Metering Diagram for a Large GSHP

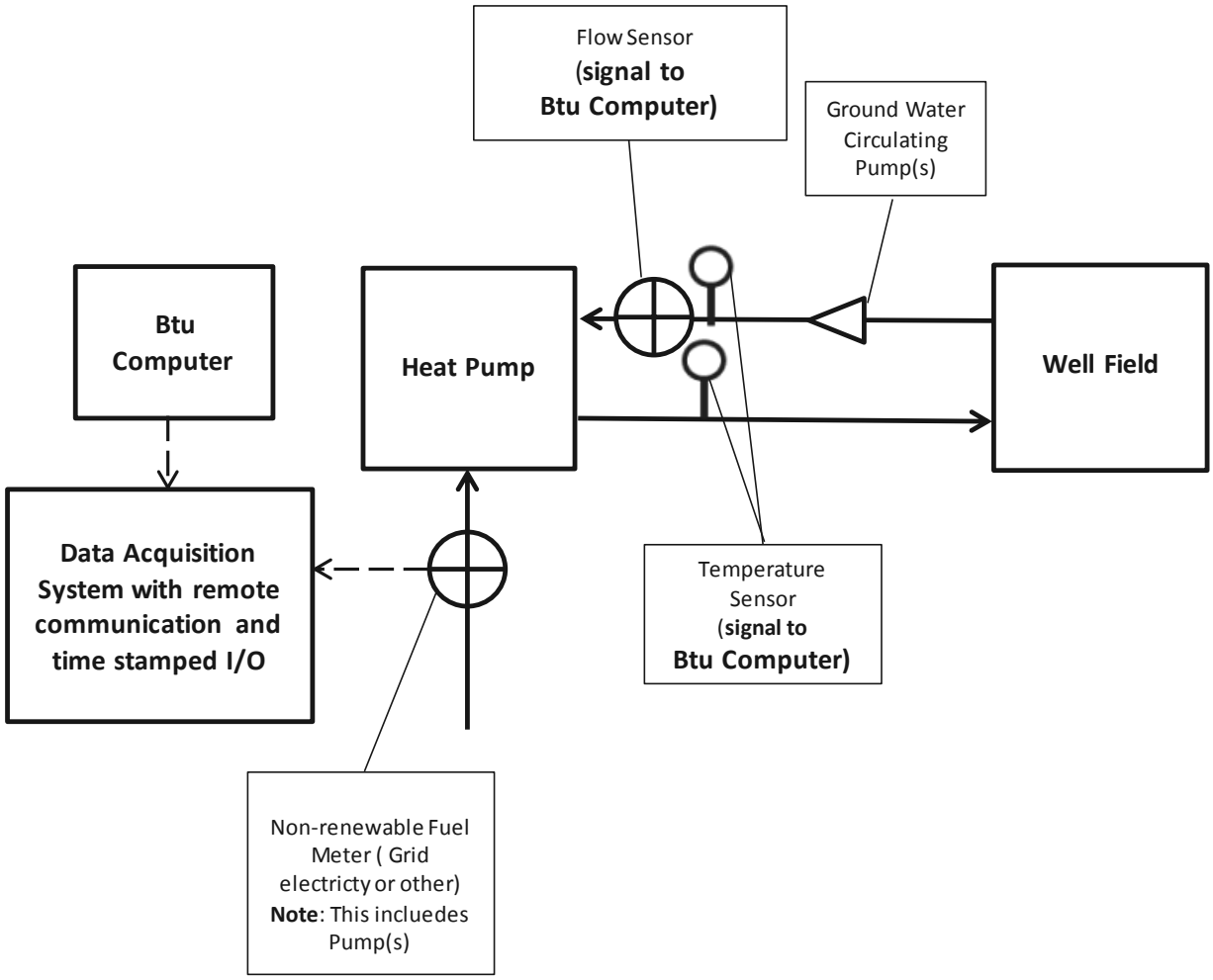

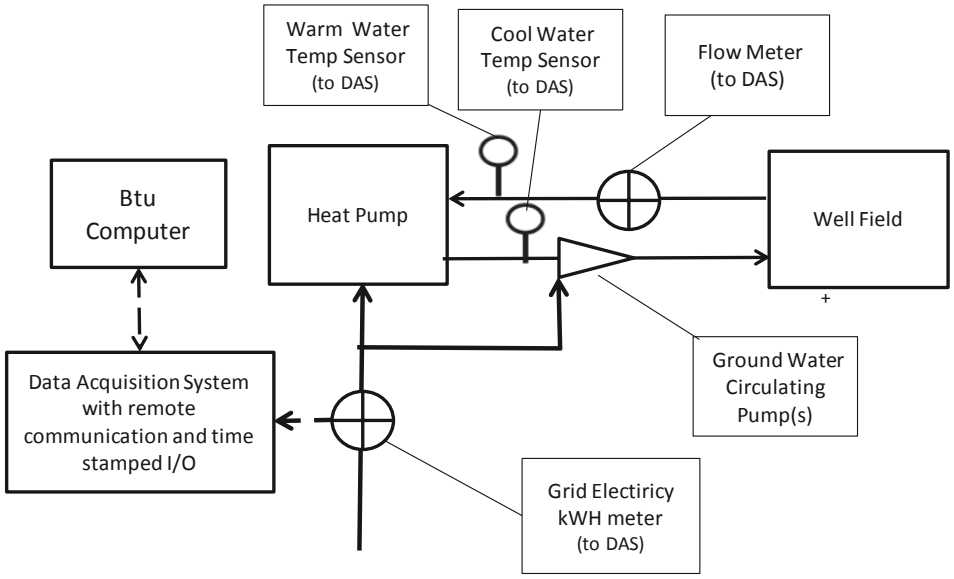

Note: Only the components directly related to either the required APS metering or otherwise related to the terms of the AECs formula for GSHP RTGU are shown.

~~2)~~3) ~~AEC~~ Formula for Large, GSHPs

$$E_{net,out} = (RH - NRFG/0.44) * M$$

Note: All terms are the cumulative as-metered values. Unless otherwise indicated, all units in MWh

Where:

$E_{net,\ out}$ = Net thermal energy output equivalent

RH = Renewable heat transferred from the ambient air to the system and is directly metered

Determination of RH:

$$RH \text{ for any interval} = RH_{supply} - RH_{return}$$

~~Where~~:

~~RH_{supply} = is the renewable thermal energy supplied from the RTGU to the useful thermal load(s)~~

~~RH_{return} = is the renewable thermal energy returned from the useful thermal load the RTGU~~

The rate of renewable heat ~~transferred over any interval is~~transfer to a useful load:

~~(~~SGWF = (GWSF * Cp * GWST – GWRT) / 3.412E6 (Btu/MWh)

Where:

GWSF = Ground water supply flow (lbs./hr)

Cp = Specific heat of the circulating well fluid (Btu/lb~~ deg~~ -°F)

GWST = Ground water supply temperature to the GSHP (°F)

GWRT = Ground water return temperature from the GSHP (°F)

~~NRF = The directly metered non-renewable~~G = Grid supplied electrical energy

Conversion of site to source nonrenewable fuel ~~(e.g.~~per MWh grid electricity~~, or other)~~

~~consumed by the RTGU~~

~~*Note: Any NRF consumed by the GSHP to well field circulating pumps must be directly metered and included in the total NRF.*~~

~~When the non-renewable fuel is grid electricity:~~

~~NRF~~ = G / (0.44~~ * F~~)

P) Intermediate and Large, Fired Systems

~~**Where:**~~

~~**G = Grid supplied electrical energy**~~

~~**F = The factor applied to the current 0.44 ISO-NE marginal grid efficiency to account for the improvements during life of a heat pump unit as projected in the Massachusetts Global Warming Solutions Act**~~

~~**M = the current multiplier for GSHPs in the Department's *Guideline on AEC Multipliers for Renewable Thermal Generation Units***~~
~~Intermediate and Large, Fired Systems~~

"Fired" denotes that the RTGU converts eligible gaseous, solid or liquid fuels to useful heat ~~is generated from the~~either by combustion ~~of eligible fuels in the RTGU~~ or other means.

Notes: ~~-~~*Fuel cells are included in this category.* ~~-~~*Any RTGU using a wood biomass fuel must comply with the added requirements as set forth in the APS Guideline on Biomass, Biogas, and Biofuels for Eligible~~*APS* *Renewable Thermal Generation Units.*

~~Combustion~~Firing modes for all Intermediate and Large Fired RTGUs (all fuels must be eligible fuels)~~ include the following:~~

(a) ~~Combustion~~Use of a single renewable fuel
(b) Co-firing of more than one renewable fuel

(c) Co-firing of one or more renewable fuels and one or more non-renewable fuel
(d) Blending of one or more renewable fuels
(e) Blending of one or more renewable fuels with one or more non-renewable fuels

Note: Co-firing denotes switching fuels without blending.

1) Fired RTGUs which are Combined Heat and Power (CHP) Systems

~~An RTGU which co-generates electricity and useful heat is designated as a CHP RTGU and may qualify for Massachusetts Portfolio Standard Programs and earn credits in one of two different ways:~~

~~(a) A CHP RTGU may qualify as a Renewable Portfolio Standard (RPS) Class I generator and as an APS RTGU In this case:~~
~~(i) The net MWh electricity generated by the CHP RTGU earns Class I Renewable Energy Credits (RECs)~~
~~(ii)~~(i) ~~The net useful heat generated by the CHP RTGU earns one AEC per net MWh of useful heat transferred to a useful load~~
~~(b)~~(a) ~~A CHP RTGU may qualify as a RPS Class I generator and as an APS CHP system per the regulations in CMR 225 16.00 that pertain to APS CHP systems and the related Guidelines. In this case:~~
~~(i) The net MWh of electricity generated by the CHP RTGU earns Class I RECs~~
~~(ii) The net MWh of electricity and the net MWh of useful heat generated by the unit earn AECs~~

A RTGU which co-generates electricity and useful heat is designated as a CHP RTGU and may qualify for Massachusetts Portfolio Standard Programs and earn credits in one of two different ways:

(a) A CHP RTGU may qualify as a Renewable Portfolio Standard (RPS) Class I generator and as an APS RTGU In this case:
(i) The net MWh electricity generated by the CHP RTGU earns Class I Renewable Energy Credits (RECs)
(ii) The net useful heat generated by the CHP RTGU earns one AEC per net MWh of useful heat transferred to a useful load
(b) A CHP RTGU may qualify as a RPS Class I generator and as an APS CHP system per the regulations in CMR 225 16.00 that pertain to APS CHP systems and the related Guidelines. In this case:
(i) The net MWh of electricity generated by the CHP RTGU earns Class I RECs
(ii) The net MWh of electricity and the net MWh of useful heat generated by the unit earn AECs per the formula for quantifying APS CHP credits as shown in CMR 225 16.00.

This guideline ~~addresses only the portion of 3(H)(23) applicable to~~is focused on the thermal output of ~~the~~a CHP RTGU which will earn APS ~~RTGU~~Renewable Thermal AECs~~.~~ per option (b).

For guidance on metering and the calculation of RPS Class I RECs consult the RPS Class I Regulations 225 CMR 14.00[3].

For guidance on metering and the calculation of AECs for APS CHP Systems, consult the *APS Guideline on the Eligibility and Metering of Combined Heat and Power Projects*[4].

2) Thermal Storage

A thermal storage system (TSS) is required for any biomass fueled RTGU for which the thermal output is a heat transfer fluid (including water and/or aqueous solutions). All systems over 1MMBtu/hr should have 2 gal/MBtu. Additional information regarding the thermal storage requirements can be found in the Department's *Guideline on Biomass, Biogas, and Biofuels for Eligible APS Renewable Thermal Generation Units.*

~~B)~~

~~1)~~3) Intermediate, Fired RTGUs, which Generate a Hot Heat Transfer Fluid and/or Steam

The major components of an Intermediate, Fired RTGUs include:

(a) Primary heat generator (e.g. boiler or engine or fuel cell)
(b) Combustion air and exhaust system
(c) Fuel storage and delivery system
(d) Burner system
(e) Pollution control systems
(f) Controls
(g) Data Acquisition System (DAS)
(h) Pumps, piping, fittings and heat exchangers which interconnect the RTGU to the useful thermal load
(i) Thermal Storage System (if the system utilizes biomass)

Figure 14. Metering Diagram for an Intermediate, Fired RTUG (Both Hot HTF and Steam)

[3] 225 CMR 14.00 can be found at http://www.mass.gov/courts/docs/lawlib/220-229cmr/225cmr14.pdf
[4] The *APS Guideline on the Eligibility and Metering of Combined Heat and Power Projects* can be found at http://www.mass.gov/eea/docs/doer/rps-aps/aps-chp-guidelines-jun14-2011.pdf

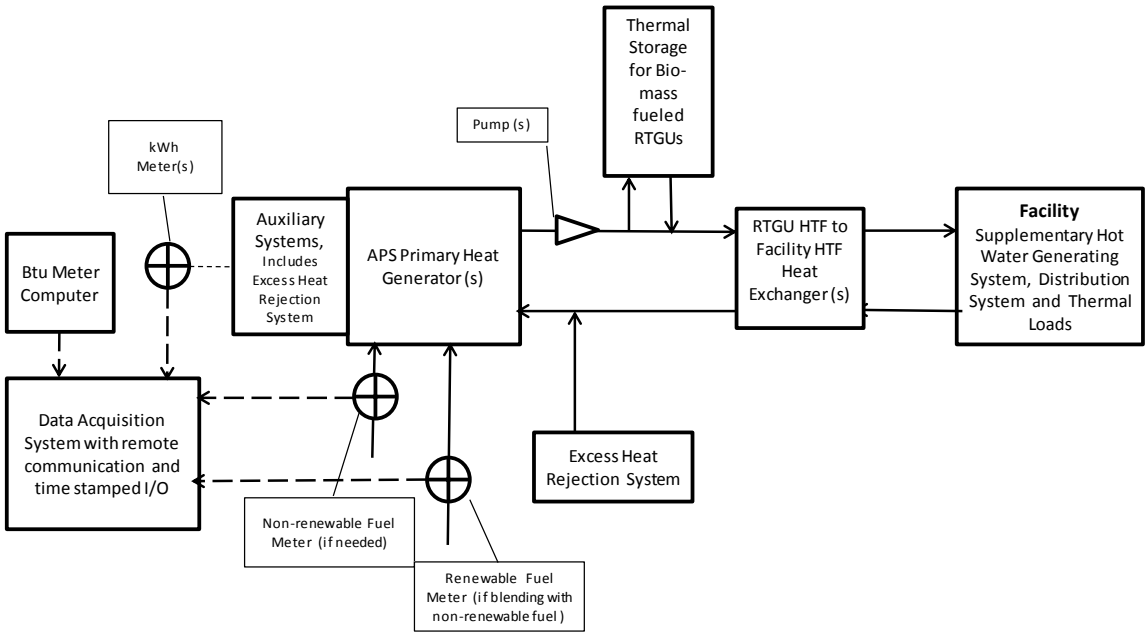

Note: Only the components directly related to either the required APS metering or otherwise related to the terms of the AECs formula for an Intermediate size fired RTGUs are shown.

2)4) AEC Formula for Intermediate, Fired RTGUs

$$E_{net,out\,AECs} = (RH - NUH - NRF - G/0.44)$$

Notes: All terms are the cumulative as-metered values. Unless otherwise indicated, all units in MWh. .The Higher Heating Value must be used for each fuel.

Where:

$E_{net,\,out}$ = Net thermal energy output equivalent

RH = Net Renewable heat transferred to a useful load and is not directly metered

2) Combustion Modes for Fired RTGUs

(a) Combustion of a single renewable fuel

(b)(a) Co-firing of more than one renewable fuel

(c)(a) Co-firing of one or more renewable fuels and one or more non-renewable fuel

(d)(a) Blending of one or more renewable fuels

(e)(a) Blending of one or more renewable fuels with one or more non-renewable fuels

Note: Co-firing is switching between fuels without blending.

3) RTGUs That Are Not CHP Systems

For all combustion modes RH is obtained by means of the certified performance of RTGU which shows the renewable thermal output for the directly metered renewable thermal fuel input.

RH = RF * RTGU EFF

~~Where:~~

~~RF = Renewable Fuel~~

~~RTGU EFF = The efficiency of the RTGU~~

~~***Note**: All certifications by the RTGU supplier must be submitted on the supplier's letterhead to the department for review and approval.*~~

NUH = non useful thermal heat rejected to a heat sink

~~*Note: For systems which includes a system that rejects heat directly generated to a heat sink (e.g. a radiator or cooling tower), the provider must either provide a method by which the heat rejected can be quantified by the independent verifier, or provide a method, such as a relay or switch, which is actuated by the operation of the heat rejection system and which transmits a signal to the data acquisition system to set to zero all AECs generated during any interval during which the heat rejection system has been running.*~~

~~NRF = The directly metered non-renewable fuel other than for combustion (e.g. grid electricity, or other) consumed by the RTGU~~

~~When the non-renewable fuel is grid electricity,~~

~~NRF = G / (0.44 * F)~~

~~Where:~~

G = Grid supplied electrical energy

~~F = the factor applied to the current 0.44 ISO-NE marginal grid efficiency to account for the improvements during life of a heat pump unit as projected in the Massachusetts Global Warming Solutions Act~~

~~M = The current~~ Conversion of site to source nonrenewable fuel per MWh grid electricity = G / (0.44)

Note: For systems which includes a system that rejects heat directly generated to a heat sink (e.g. a radiator or cooling tower), the provider must either provide a method by which the heat rejected can be quantified by the independent verifier, or provide a method, such as a relay or switch, which is actuated by the operation of the heat rejection system and which transmits a signal to the data acquisition system to set to zero all AECs generated during any interval during which the heat rejection system has been running.

~~multiplier for GSHPs in the Department's *Guideline on AEC Multipliers for Renewable Thermal Generation Units*~~

~~**2.**~~

5) Firing Modes for Intermediate~~,~~ Fired RTGUs

~~(a) Use of a single renewable fuel~~
~~(b) Co-firing of more than one renewable fuel~~
~~(c) Co-firing of one or more renewable fuels and one or more non-renewable fuel~~
~~(d) Blending of one or more renewable fuels~~
~~(e) Blending of one or more renewable fuels with one or more non-renewable fuels~~

~~that are~~*Note: Co-firing denotes switching fuels without blending*

~~1)~~6) Determination of RH for Intermediate, RTGUs That Are Not CHP Systems

RH =RF * CRO

~~Where:~~

RF = Renewable Fuel

CRO = The RTGU Certified Renewable Thermal Output (MWh thermal output per MWh Renewable Fuel converted)

For all firing modes RH is obtained by means of the certified performance of the RTGU as provided by unit supplier which shows the renewable thermal output for the directly metered renewable fuel input.

If operating in mode (e) using a blend with a fixed composition, a certified performance established for the specific blend which shows the fraction of the total output for the renewable fraction of the blended fuel. If operating using a blend with a variable composition, the method of quantification will be determined on a case by case basis by the DOER.

~~Note: All certifications~~ of performance by the RTGU supplier must be submitted on the supplier's letterhead to the department for review and approval.

7) Intermediate, Fired CHP RTGUs

For all combustion modes:

RH= The net heat recovered from the CHP system transferred to useful load.
~~Quantification of~~ RH:

The CHP RTGU electricity generated is directly metered. RH is obtained by means of the certified performance map provided by the system OEM of the CHP RTGU showing the ~~renewable~~ net thermal output for each 10 kW increment of electrical output over the full range of the RTGU's generating capacity. The kW of the CHP RTGU must be recorded at intervals of ~~no longer~~less than or equal to 5 minutes.

If operating in mode (e) using a blend with a fixed composition, a certified performance established for the specific blend which shows the fraction of the total output for the renewable fraction of the blended fuel. If operating using a blend with a variable composition, the method of quantification will be determined on a case by case basis by the DOER.

~~8) Large, Fired RTGUs which Generate a Hot Heat Transfer Fluid~~

~~Major Components of a Large, Fired RTGU which generates hot heat transfer fluid include:~~

~~(a) Primary heat generator (e.g. boiler or engine or fuel cell)~~
~~(b) Combustion air and exhaust system~~
~~(c) Fuel storage and delivery system~~
~~(d) Burner system~~
~~(e) Pollution control systems~~
~~(f) Controls~~
~~(g) Data acquisition system (DAS)~~
~~(h) Pumps, piping, fittings and heat exchangers which interconnect the RTGU to the useful thermal load~~

9) Metering for Large, Fired RTGUs which Generate a Hot Heat Transfer Fluid

~~Metering for Large, Fired RTGUs which Generate a Hot Heat Transfer Fluid~~

The following guidelines are based on a generic basic configuration as shown in Figure 15~~15~~.

The Department will evaluate metering plans and submittals based on alternative configurations on a case-by-case basis.

~~Figure~~ 15~~. Metering Diagram for a Large Fired RTUG which Generates a Hot Heat Transfer Fluid~~

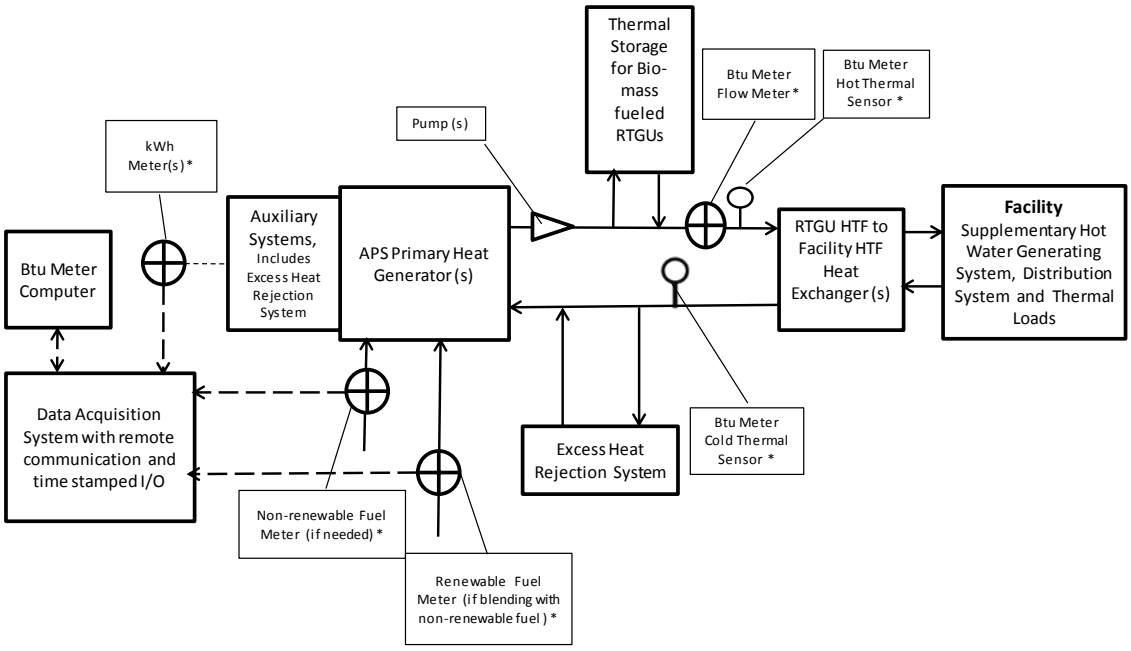

An asteriks indicates a DAS input

~~*Note: Only the components directly related to either the required APS metering or otherwise related to the terms of the AECs formula for a Large Fired RTGU which Generates a Hot Heat Transfer Fluid are shown.*~~

~~10) AEC Formulae for a Large, RTGU Generating a Hot Heat Transfer Fluid~~

$$E_{net,out}^{AEC} = (RH - NUH - P_t - G/0.44)$$

~~*Note: All terms are the cumulative as-metered values. Unless otherwise indicated, all units in MWh*~~

~~Where:~~

~~RH = Renewable heat transferred to a useful load and is directly metered~~

NUH = Non useful thermal heat rejected to a heat sink

G = Grid supplied electrical energy

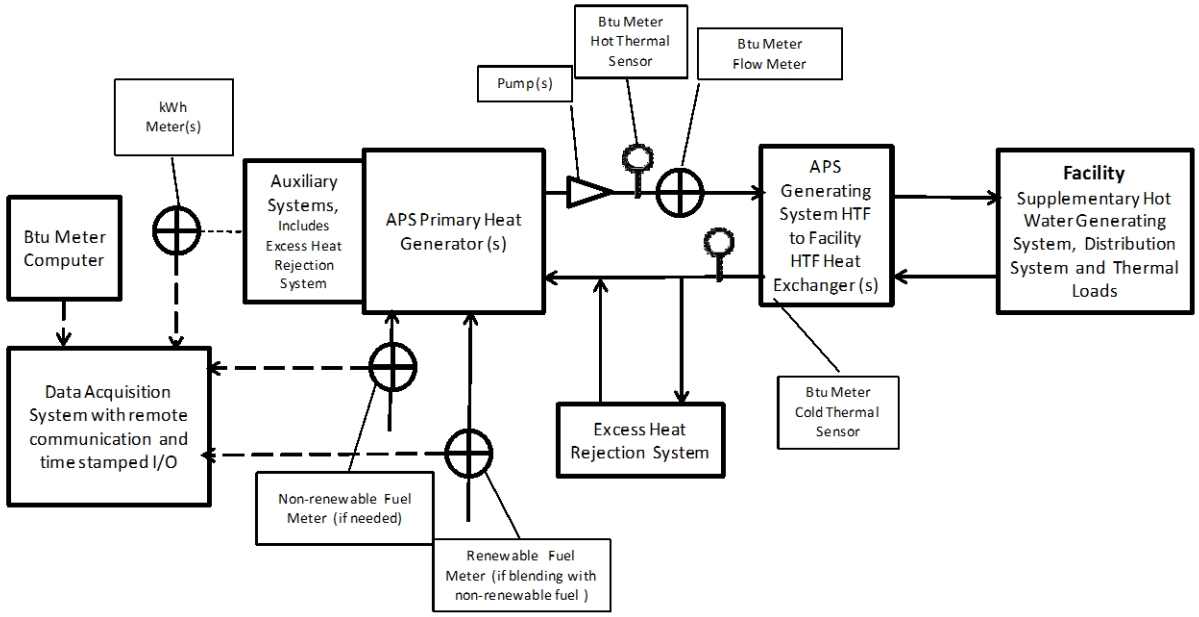

~~NCRF = (P$_t$ – P$_e$) * M~~

~~Combustion modes for Fired RTGUs (all fuels must be eligible fuels):~~

~~Combustion~~Conversion of site to source nonrenewable fuel per MWh grid electricity = G / (0.44)

Pt = Parasitic thermal energy

Note: For systems which includes a system that rejects heat directly generated to a heat sink (e.g. a radiator or cooling tower), the provider must either provide a method by which the heat rejected can be quantified or provide a method, such as a relay or switch which is actuated by the operation of the heat rejection system and will transmits a signal to the data acquisition system to set to zero

all AECs generated during any interval during which the heat rejection system has been running.
For a CHP RTGU, G does not include any electricity supplied to auxiliary systems by the CHP generator(s)

~~NCNRF = The directly metered non-renewable fuel other than for combustion (e.g. grid electricity, or other) consumed by the RTGU~~

~~When the non-renewable fuel is grid electricity,~~

~~NRF = G / (0.44 * F)~~

~~Where:~~

~~G = Grid supplied electrical energy~~

~~F = The factor applied to the current 0.44 ISO-NE marginal grid efficiency to account for the improvements during life of a heat pump unit as projected in the Massachusetts Global Warming Solutions Act~~

~~M = the current multiplier for GSHPs in the Department's *Guideline on AEC Multipliers for Renewable Thermal Generation Units*~~

~~4) Large, Fired RTGUs which Generate a Hot Heat Transfer Fluid~~

~~Major Components of a Large, Fired RTGU which generates hot heat transfer fluid include:~~

~~(a) Primary heat generator (e.g. boiler or engine or fuel cell)~~
~~(b) Combustion air and exhaust system~~
~~(c) Fuel storage and delivery system~~
~~(d) Burner system~~
~~(e) Pollution control systems~~
~~(f) Controls~~
~~(g) Data acquisition system (DAS)~~
~~(h) Pumps, piping, fittings and heat exchangers which interconnect the RTGU to the useful thermal load~~

5) Metering for Large, Fired RTGUs which Generate a Hot Heat Transfer Fluid

Figure 13. Metering Diagram for a Large Fired RTUG which Generates a Hot Heat Transfer Fluid

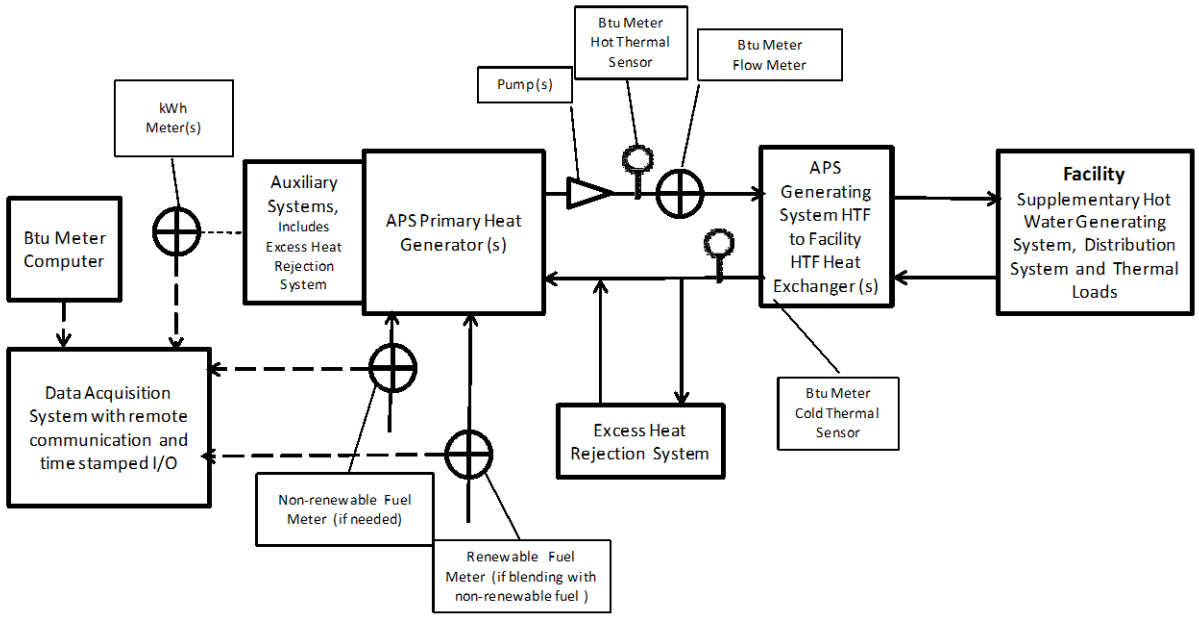

Note: Only the components directly related to either the required APS metering or otherwise related to the terms of the AECs formula for a Large Fired RTGU which Generates a Hot Heat Transfer Fluid are shown.

6) AEC Formulae for a Large, RTGU Generating a Hot Heat Transfer Fluid

$$AECs = (RH - NUH - NCRF - P_t - P_e) * M$$

Note: All terms are the cumulative as-metered values. Unless otherwise indicated, all units in MWh

Where:

RH = Renewable heat transferred to a useful load and is directly metered

Combustion modes for Fired RTGUs (all fuels must be eligible fuels):

Combustion

11) Firing Modes

(a) Use of a single renewable fuel
(b) Co-firing of more than one renewable fuel

(c) Co-firing of one or more renewable fuels and one or more non-renewable fuel
(d) Blending of one or more renewable fuels
(e) Blending of one or more renewable fuels with one or more non-renewable fuels

Determination of RH:

RH for Firing Modes (a), (b), (c), (d):

~~RH for any interval = $RH_{supply} - RH_{return}$~~

~~General Formulae:~~

~~For RTGUs~~

~~**$AEC_S = (RH - NUH - NCNRF - P_t) * M$**~~

~~*Note: All terms are the cumulative as-metered values. Unless otherwise indicated, all units in MWh*~~

~~For CHP RTGUs~~

~~**$AEC_S = (RH - NUH - NCNRF - P_t - P_e) * M$**~~

~~*Note: All terms are the cumulative as-metered values. Unless otherwise indicated, all units in MWh*~~

Where:~~:~~

~~RH = Is~~RH_{supply} ~~=~~ is the renewable thermal energy ~~transferred~~supplied from the RTGU to ~~a~~the useful thermal load~~(s)~~

~~RH for any interval = RH_{supply} – RH_{return}~~

~~RH_{supply} = is the renewable thermal energy supplied from the RTGU to the useful thermal load(s)~~

~~RH_{return} = is the renewable thermal energy returned from the useful thermal load the RTGU~~

~~NUH = Non~~RH_{return} = is the renewable thermal energy returned from the useful thermal load the RTGU

The rate of renewable heat ~~rejected~~transfer to a ~~heat sink~~useful load

~~*Note: For systems which includes a system that rejects heat directly generated to a heat sink (e.g. a radiator or cooling tower), the provider must either provide a method by which the heat rejected can be quantified or provide a method, such as a relay or switch which is actuated by the operation of the heat rejection system and will transmits a signal to the data acquisition system to set to zero all AECs generated during any interval during which the heat rejection system has been running.*~~

~~NCNRF = Any consumption of non-renewable fuel other than for combustion~~

~~When the NCNRF renewable fuel is grid electricity~~

~~NCRF = G / (0.44 * F)~~

~~Where:~~

~~G = Grid supplied electrical energy~~

~~F = the factor applied to the current 0.44 ISO-NE marginal grid efficiency to account for the improvements during life of a heat pump unit as projected in the Massachusetts Global Warming Solutions Act~~

~~P_e = Parasitic Electrical Energy (this applies only to a CHP RTGU, see Sections A(7) and A(8) for further details)~~

~~M = the current multiplier for GSHPs in the Department's *Guideline on AEC Multipliers for Renewable Thermal Generation Units*~~

~~RH for Modes a, b, c, d:~~

~~RH = Is the renewable thermal energy transferred to a useful load~~

~~RH for any interval = RH_{supply} – RH_{return}~~

= HTFF * Cp HTF * (HTFST – HTFRT))/3.412E6 (Btu/MWh)

~~RH for Mode e~~

RH for any interval~~:~~ operating in Mode (e) =

~~(AvgCRF / (AvgCRF + AvgNRCF~~= (RF / (RF + NRF) * (RH_{supply} –RH_{return})

The rate of renewable heat transfer to a useful load is

= (RF / (RF + NRF) * HTFF * Cp HTF * (HTFST – HTFRT))~~ / 3.412E6 (Btu/MWh)~~

Where:

HTFF = Heat transfer fluid flow (lbs./hr)

RF = The metered renewable fuel

NRF = Non-renewable fuel

Cp HTF = The constant pressure specific heat of the HTF (~~Btu~~MWh/lb-°F)

HTST= HTF supply temperature (°F)

HTRT= HTF return temperature (°F)

~~CRF~~RF = Consumption of all renewable fuel (~~Btu~~MWh)

~~CNRF~~NRF = Consumption of all non-renewable fuel ~~for combustion (Btu)~~(MWh)

~~AvgRCF = Average consumption of all renewable fuel (Btu)~~

~~AvgNRCF = Average consumption of all non-renewable fuel for combustion (Btu)~~

~~2)~~12) Large, Fired RTGU which Generate Steam

The major components of a Large~~,~~ Fired RTGU that generates steam are:

(a) A primary heat generator (e.g. an internal combustion engine, combustion turbine, or boiler)
(b) A fired heat recovery steam generator (HRSG)
(c) A Deaerator / Feedwater Heater(s)
(d) Pumps, piping, fittings and heat exchangers which connect the primary heat generator with the facility thermal distribution system and allow the transfer of thermal energy from the generation system to the facility thermal loads.
(e) Condensate return system
(f) Feedwater system
(g) Make up water system
(h) A blowdown heat recovery system
(i) Pollution controls
(j) Auxiliary Systems (e.g. heat rejection system (e.g. radiators or cooling towers), feedwater pumps, fans, blowers, fuel gas compressors)
(k) System controls
(l) Data acquisition and plant historian systems

~~3)~~13) General Metering Requirements for Large, RTGUs Generating Steam

The following guidelines are based on a generic basic configuration as shown in The following guidelines are based on a generic basic configuration as shown in Figure 15.

The Department will evaluate metering plans and submittals based on alternative configurations on a case-by-case basis.

Figure 15~~1515~~. The Department will evaluate metering plans and submittals based on alternative configurations on a case-by-case basis

(a) Btu and kWh meters as shown ~~Figure 13.~~ in Figure 14.

(b) Fuel metering is required when a renewable fuel will be blended with an non-renewable fuel
(c) Data acquisition systems (DAS) for recording, storing and transmitting of time stamped kWh, Btu, and fuel meter data.

Note: Any RTGU using a ~~w~~wood~~y~~ biomass fuel must comply with the added requirements as set forth in the APS Guideline on Biomass, Biogas, and Biofuels for ~~Eligible~~ ~~APS~~ Renewable Thermal Generation Units.

Figure 16. Simplified Schematic Diagram of a Generic RTGU Generating Steam

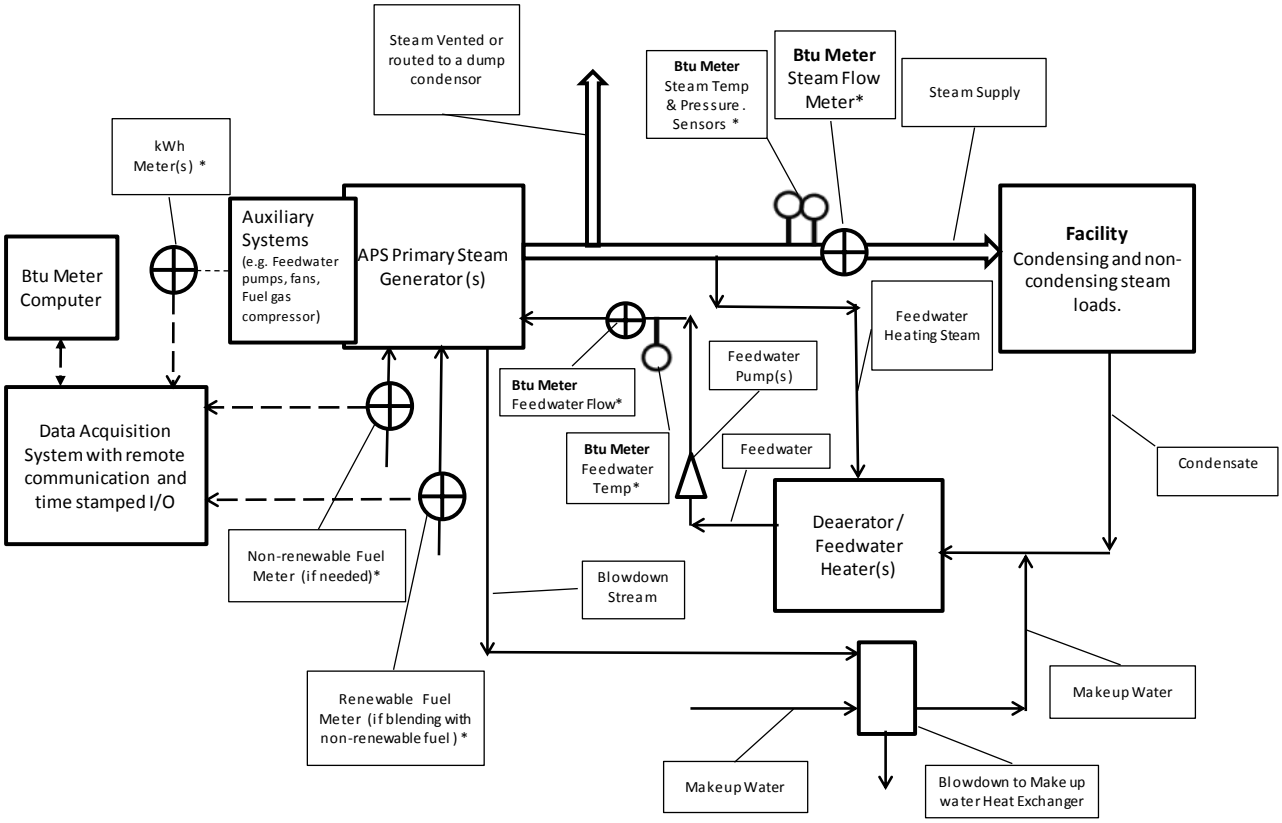

An asteriks indicates a DAS input

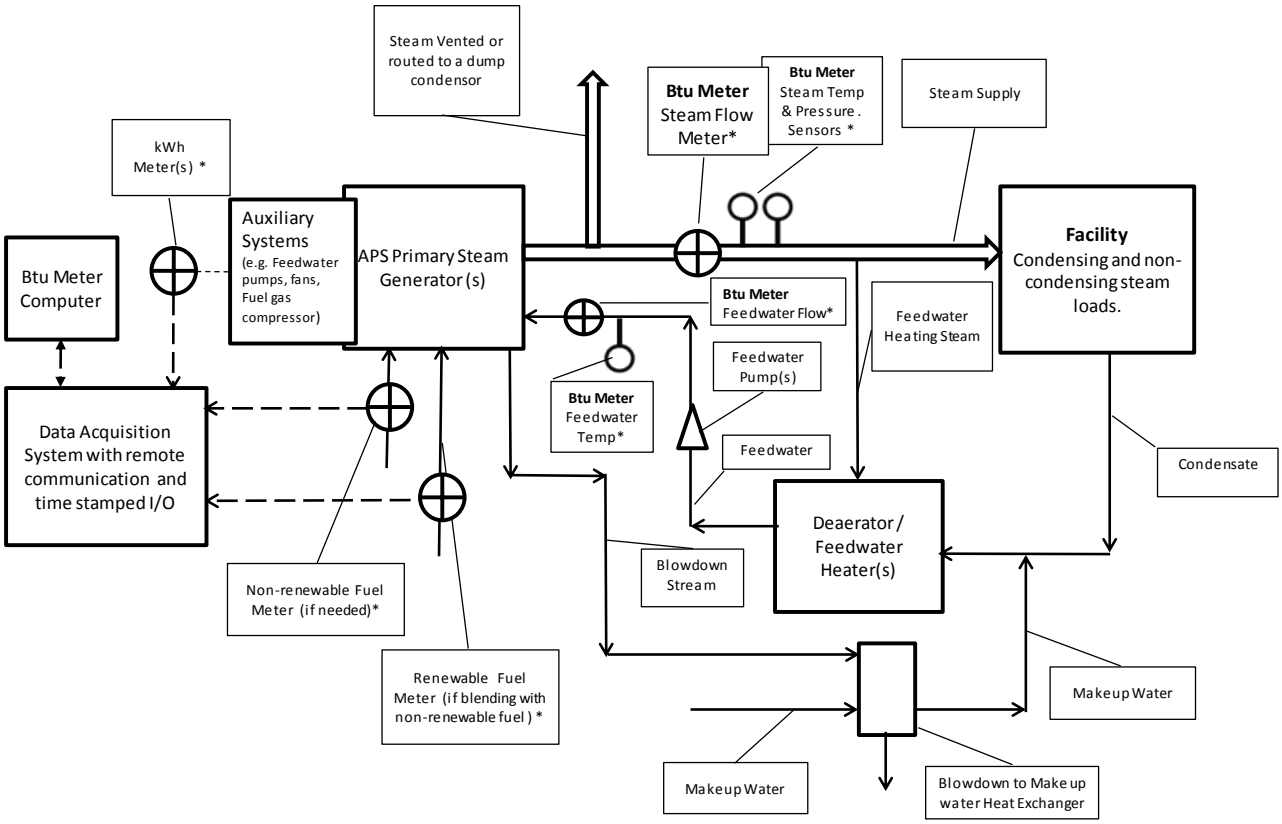

An asteriks indicates a DAS input

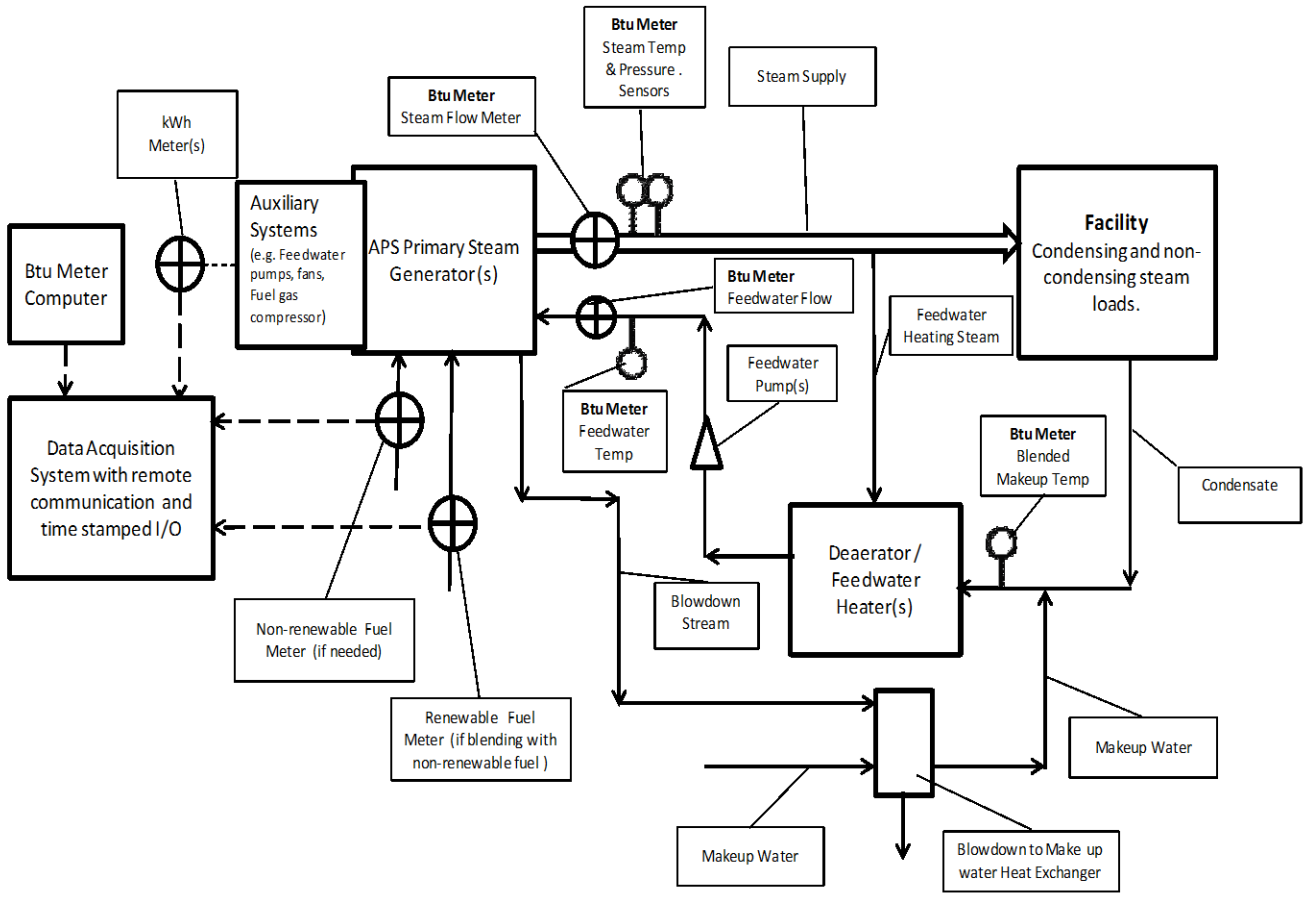

~~*Note:*~~

~~4)~~14) Formula for Large, RTGUs Generating Steam

$$E_{net,\,out} = (RH - NUH - P_t - G/0.44)$$

~~*Note: All terms are the cumulative as-metered values. Unless otherwise indicated, all units in MWh*~~

Where:

$E_{net,\,out}$ = Net thermal energy output equivalent

RH = The renewable thermal energy transferred to a useful load

~~G = Grid supplied electrical energy~~

Conversion of site to source nonrenewable fuel per MWh grid electricity = G / (0.44)

NUH = non useful renewable thermal heat

Pt= Parasitic thermal energy

~~*Notes:*~~

1. For systems which includes a system that rejects steam to a heat sink (e.g. a , cooling tower or blow down drain), the non-useful energy must either be metered or accounted for by calculation. The determination of whether a meter is required will be determined by the Department on a case by case basis/

2. T~~Thermal energy in a boiler blowdown stream that is recovered and transferred to a useful load (e.g. heating make up or feedwater) is considered to be thermal energy transferred to a useful load~~ and is to be included in the RH term.

3. *The ideal steam and condensate return distribution system would require no makeup water, related feed water heating and minimal deaerating. However, this ideal typically cannot be achieved. The Department considers that for a well-designed and maintained closed steam distribution system, the amount of makeup water should not be more than 10% of the amount of steam generated. For this reason, for a closed system, the steam heating of the feedwater is ~~considered to be parasitic~~a non-useful load and which is accounted for by basing the useful heat transferred on the difference between the enthalpy of the steam generated minus the enthalpy of the feedwater supplied. Refer to The following* guidelines are based on a generic basic configuration as shown in Figure 15.

The Department will evaluate metering plans and submittals based on alternative configurations on a case-by-case basis.

~~*1.*~~ Figure 15~~15~~15 *for the placement of the Btu meter on the feedwater return after the deaerator*.

~~*2.1.*~~

~~*3. **AEC Formula for** Large, RTGUs Generating Steam*~~

~~*4.*~~

~~*5. **AECs = (RH- NUH – NRF – P_t –P_e) * M***~~

~~*6.1.*~~

~~*7. Where:*~~

~~*8.*~~

~~*9. RH = Renewable heat transferred to a useful load*~~

~~*10.*~~

~~11. Combustion modes for Fired RTGUs (all fuels must be eligible fuels):~~

~~12.~~

~~13. Combustion of a single renewable fuel~~

~~14. Co-firing of more than one renewable fuel~~

~~15. Co-firing of one or more renewable fuels and one or more non-renewable fuel~~

~~16. Blending of one or more renewable fuels~~

~~17. Blending of one or more renewable fuels with one or more non-renewable fuels~~

~~18.~~

~~19.1. General Formulae:~~

~~20.1.~~

~~21. For RTGUs~~

~~22.~~

~~23. $AECs = (RH - NUH - NRF - P_t) * M$~~

~~24. Note: All terms are the cumulative as-metered values. Unless otherwise indicated, all units in MWh~~

~~25.~~

~~26.~~

~~27. For CHP RTGUs~~

~~28.~~

~~29. $AECs = (RH - NUH - NRF - P_t - P_e) * M$~~

~~30. Note: All terms are the cumulative as-metered values. Unless otherwise indicated, all units in MWh~~

~~31.1.~~

~~32. Where:~~

~~33.~~

~~34. RH = Is the renewable thermal energy transferred to a useful load~~

~~4. Many steam generating and distribution systems are not closed in that there are locations where, by design, steam is released and are not returned as condensate. Examples of this are sparging (the direct~~

~~*injection of live steam into a process for the purpose of heating) or the use of steam as a reactant in a process.*~~

5. ~~Whenever the pounds of makeup water are greater than than 10% of the pounds of steam generated due to the reasons listed above or others as are approved by the Department on a case-by-case basis, the temperature to be used for the feedwater supply will be the temperature of the combined flows of the condensate return and the makeup water.~~

6. For a CHP RTGU, G does not include any electricity supplied to auxiliary systems by the CHP generator(s)

~~M = the current multiplier for GSHPs in the Department's Guideline on AEC Multipliers for Renewable Thermal Generation Units~~

~~*36.1. RH for any interval = RH_{supply} – RH_{return}*~~

~~*38. RH_{supply} = Is the renewable thermal energy supplied from the RTGU to the useful thermal load(s)*~~

~~*40. RH_{return} = Is the renewable thermal energy returned from the useful thermal load the RTGU*~~

~~*42. NUH = non useful thermal heat rejected to a heat sink*~~

~~*45. For systems which includes a system that rejects heat directly generated to a heat sink (e.g. a radiator, cooling tower or blow down drain), the provider must either provide a method by which the heat rejected can be metered or otherwise quantified or provide a method, such as a relay or switch which is actuated by the operation of the heat rejection system and will transmits a signal to the data acquisition system to set to zero all AECs generated during any interval during which the heat rejection system has been running.*~~

~~*46. Thermal energy in a boiler blowdown stream that is recovered and transferred to a useful load (e.g. heating make up or feedwater) is considered to be thermal energy transferred to a useful load.*~~

~~*48. NCNRF = Any consumption of non-renewable fuel other than for combustion*~~

~~*49.*~~

~~50. When the NCNRF renewable fuel is grid electricity~~

~~51.~~

~~52. NCRF = G / (0.44 * F)~~

~~53.~~1.

~~54. Where:~~

~~55.~~1.

~~56. G = Grid supplied electrical energy~~

~~57.~~

~~58. F = the factor applied to the current 0.44 ISO-NE marginal grid efficiency to account for the improvements during life of a heat pump unit as projected in the Massachusetts Global Warming Solutions Act~~

~~59.~~

~~60. P_e = Parasitic electrical energy (this applies only to a CHP RTGU, see Sections A(7) and A(8) for further details)~~

~~61.~~

~~62. Pt= Parasitic thermal energy~~

~~63.~~

~~64.~~7. ~~**Note:**~~ *Parasitic thermal energy consumption in RTGU steam generators is most often associated with motive steam to drive auxiliary systems e.g. feedwater pumps or compressors, absorption chillers used to pre-cool gas turbine inlet air, and feedwater heating.*

~~65.~~

~~66.~~8. *All efforts should be made to locate system Btu meters such that the consumption of thermal parasitic thermal energy is netted out. In the event that this cannot be accomplished the parasitic thermal energy of any auxiliary component with a demand above a To Be Determined value during nominal operating conditions will require a separate Btu meter and the energy required to operate them is not metered or included in the determination of the AECs.*

~~The ideal steam and condensate return distribution system would require no makeup water, related feed water heating and minimal deaerating. However, this ideal typically cannot be achieved. The Department considers that for a well-designed and maintained closed steam distribution system, the amount of makeup water should not be more than 10% of the amount of~~

~~*steam generated. For this reason, for a closed system, the steam heating of the feedwater is considered to be parasitic and which is accounted for by basing the useful heat transferred on the difference between the enthalpy of the steam generated minus the enthalpy of the feedwater supplied. Refer to Figure 13 for the placement of the Btu meter on the feedwater return after the deaerator.*~~

~~*Many steam generating and distribution systems are not closed in that there are locations where, by design, steam is released and are not returned as condensate. Examples of this are sparging (the direct injection of live steam into a process for the purpose of heating) or the use of steam as a reactant in a process.*~~

~~*Whenever the pounds of makeup water are greater than than 10% of the pounds of steam generated due to the reasons listed above or others as are approved by the Department on a case-by-case basis, the temperature to be used for the feedwater supply will be the temperature of the combined flows of the condensate return and the makeup water.*~~

~~M = the current multiplier for GSHPs in the Department's *Guideline on AEC Multipliers for Renewable Thermal Generation Units*~~

Determination of RH ~~for~~

For Modes a, b, c, d:

~~RH = Is the renewable thermal energy transferred to a useful load~~

$$RH \text{ for any interval} = RH_{supply} - RH_{return}$$

Where:

RH_{supply} = is the renewable thermal energy supplied from the RTGU to the useful thermal load(s)

RH_{return} = is the renewable thermal energy returned from the useful thermal load the RTGU

The rate of renewable heat transfer to a useful load

$$= (SF * hS - FW * hFW) / 3.412E6 \text{ (Btu/MWh)}$$

~~For~~RH ~~for~~ Mode (e~~:~~):

RH for any interval ~~is =~~

~~(AvgCRF / (AvgCRF + AvgNRCF~~ = (RF / (RF + NRF)* (RH_{supply} –RH_{return})

The rate of renewable heat transfer to a useful load

= (RF / (RF + NRF) * (SF* hS – FW*hFW) / 3.412E6 (Btu/MWh)

Where:

SF= Steam generated (lbs.)

FW = Total feedwater flow (lbs.)

hS = Feedwater enthalpy (Btu/lb)

hFW = Feed water enthalpy (Btu/lb)

RF = The metered renewable fuel

(Btu)

NRF = Non-renewable fuel (Btu)

Cp HTF = The constant pressure specific heat of the HTF (Btu/lb-°F)

HTST= HTF supply temperature (°F)

HTRT= HTF return temperature (°F)

~~1.~~

~~CRF = Consumption of all renewable fuel (Btu)~~

~~CNRF = Consumption of all non-renewable fuel for combustion (Btu)~~

~~AvgRCF = Average consumption of all renewable fuel (Btu)~~

~~AvgNRCF = Average consumption of all non-renewable fuel for combustion (Btu)~~

~~Authority to Audit~~

~~The Department reserves the right to audit all qualified Generation Units at any time during their 10 year qualification period, to ensure they are continuing to meet the eligibility criteria identified in 225 CMR 14.00 and the Department's Guideline on Metering and Calculating the Useful Thermal Output of Eligible Renewable Thermal Generation Unit.~~

4. Miscellaneous

~~Miscellaneous~~

The Department may permit an exception from any provision of this Guideline for good cause.