DEMOLITION NOTES:

1. SITE PREPARATION AND DEMOLITION SHALL INCLUDE THOSE AREAS WITHIN THE LIMIT OF WORK LINE AS SHOWN ON THE CONTRACT DOCUMENTS.
2. ANY AREA OUTSIDE THE LIMIT OF WORK THAT IS DISTURBED SHALL BE RESTORED TO ITS ORIGINAL CONDITION AT NO ADDITIONAL COST TO THE OWNER.
3. CONSULT ALL OF THE DRAWINGS AND SPECIFICATIONS FOR COORDINATION REQUIREMENTS BEFORE COMMENCING DEMOLITION.
4. THE CONTRACTOR SHALL COORDINATE SITE DEMOLITION EFFORTS WITH ALL TRADES THAT MAY BE AFFECTED BY THE WORK.
5. ALL ITEMS REQUIRING REMOVAL SHALL BE REMOVED TO FULL DEPTH TO INCLUDE BASE MATERIAL AND FOOTINGS OR FOUNDATIONS AS REQUIRED TO FACILITATE CONSTRUCTION, AND LEGALLY DISPOSED OF OFFSITE BY CONTRACTOR.
6. UTILITY PIPES DESIGNATED TO BE ABANDONED IN PLACE SHALL BE PLUGGED AT THEIR ENDS WITH WATERTIGHT BRICK MASONRY OR CEMENT MORTAR WITH A MINIMUM THICKNESS OF 8 INCHES.
7. UTILITY PIPES DESIGNATED TO BE REMOVED SHALL CONSIST OF THE COMPLETE REMOVAL AND DISPOSAL OF THE ENTIRE LENGTH OF PIPE AND BACKFILL AND 95% COMPACTION OF THE VOID WITH ORDINARY BORROW. WHEN THE VOID IS WITHIN THE FOOTPRINT OF THE NEW BUILDING, GRAVEL BORROW SHALL BE USED TO BACKFILL THE VOID.
8. UTILITY STRUCTURES DESIGNATED TO BE ABANDONED IN PLACE SHALL HAVE THEIR CAST IRON CASTINGS REMOVED AND DISPOSED, INLET AND OUTLET PIPES PLUGGED, THE BOTTOM OF THE STRUCTURES SHALL BE BROKEN, THE VOID OF THE STRUCTURES SHALL BE BACKFILLED AND COMPACTED TO 95% WITH ORDINARY BORROW OR FLOWABLE FILL, AND THE TOP OF THE STRUCTURE SHALL BE REMOVED SO THAT IT IS AT LEAST 36 INCHES BELOW FINISH GRADE.
9. UTILITY STRUCTURES DESIGNATED TO BE REMOVED SHALL CONSIST OF THE REMOVAL AND DISPOSAL OF CAST IRON CASTINGS, PLUGGING OF INLET AND OUTLET PIPES, REMOVAL OF THE STRUCTURE, AND BACKFILL AND 95% COMPACTION OF THE VOID WITH ORDINARY BORROW. WHEN HE VOID IS WITHIN THE FOOTPRINT OF THE NEW BUILDING, GRAVEL BORROW SHALL BE USED TO BACKFILL THE VOID.
10. ALL DEBRIS GENERATED DURING SITE PREPARATION ACTIVITIES SHALL BE LEGALLY DISPOSED OF OFFSITE.
11. AT ALL LOCATIONS WHERE EXISTING CURBING, CONCRETE PAVEMENT OR BITUMINOUS CONCRETE ROADWAY ABUTS NEW CONSTRUCTION, THE EDGE OF THE EXISTING CURB OR PAVEMENT SHALL BE SAW CUT TO A CLEAN, SMOOTH EDGE.
12. EXTEND DESIGNATED LIMIT OF WORK AS NECESSARY TO ACCOMPLISH ROUGH GRADING, EROSION CONTROL, TREE PROTECTION, AND SITE WORK AS REQUIRED BY THESE DRAWINGS AND SPECIFICATIONS.
13. THE CONTRACTOR SHALL REMOVE FROM THE SITE ALL RUBBISH AND DEBRIS FOUND THEREON. STORAGE OF SUCH MATERIALS ON THE PROJECT SITE WILL NOT BE PERMITTED. THE CONTRACTOR SHALL LEAVE THE SITE IN SAFE, CLEAN, AND LEVEL CONDITION UPON COMPLETION OF THE SITE DEMOLITION WORK.
14. REMOVE AND STOCKPILE ALL EXISTING SITE LIGHTS, BENCHES, TRASH RECEPTACLES, TRAFFIC SIGNS, GRANITE CURB, AND OTHER SITE IMPROVEMENTS WITHIN LIMIT OF WORK LINE UNLESS OTHERWISE NOTED.
15. ALL EXISTING TREES AND SHRUBS TO REMAIN SHALL BE PROTECTED AND MAINTAINED THROUGHOUT THE TIME OF CONSTRUCTION, AS SPECIFIED AND DIRECTED BY THE LANDSCAPE ARCHITECT.
16. BEFORE ANY TREES OR SHRUBS ARE REMOVED, THE CONTRACTOR SHALL ARRANGE A CONFERENCE ON THE SITE WITH THE OWNER OR OWNER'S REPRESENTATIVE TO IDENTIFY TREES AND SHRUBS THAT ARE TO BE REMOVED, AS WELL AS THOSE WHICH ARE TO BE PROTECTED. DO NOT COMMENCE CLEARING OPERATIONS WITHOUT A CLEAR UNDERSTANDING OF EXISTING CONDITIONS TO BE PRESERVED.
17. THE CONTRACTOR SHALL REMOVE FROM THE AREA OF CONSTRUCTION PAVEMENT, CONCRETE, CURBING, POLES AND FOUNDATIONS, ISLANDS, TREE BERMS AND OTHER FEATURES WITHIN THE LIMITS OF CONSTRUCTION AS REQUIRED TO ACCOMMODATE NEW CONSTRUCTION WHETHER SPECIFIED ON THE DRAWINGS OR NOT.

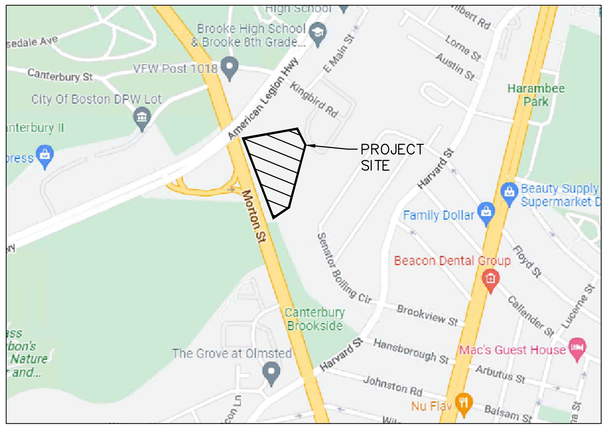

LOCUS PLAN

NOT TO SCALE
SOURCE: GOOGLE MAPS

EROSION AND SEDIMENT CONTROL NOTES:

1. ALL EROSION AND SEDIMENT CONTROL MEASURES SHALL BE CONSTRUCTED AND MAINTAINED IN ACCORDANCE WITH THE LATEST EDITION OF THE "MASSACHUSETTS EROSION AND SEDIMENT CONTROL GUIDELINES FOR URBAN AND SUBURBAN AREAS" PREPARED BY DEPARTMENT OF ENVIRONMENTAL PROTECTION, BUREAU OF RESOURCE PROTECTION, AND THE CURRENT NPDES GENERAL PERMIT FOR STORMWATER DISCHARGES FROM CONSTRUCTION ACTIVITIES.
2. MEANS OF EROSION AND SEDIMENT PROTECTION AS NOTED ON THE DRAWINGS INDICATE MINIMUM RECOMMENDED PROVISIONS. THE CONTRACTOR IS RESPONSIBLE FOR FINAL SELECTION AND PLACEMENT OF EROSION AND SEDIMENTATION CONTROLS BASED ON ACTUAL SITE CONDITIONS AND CONSTRUCTION CONDITIONS. ADDITIONAL MEANS OF PROTECTION SHALL BE PROVIDED BY THE CONTRACTOR AS REQUIRED FOR CONTINUED OR UNFORESEEN EROSION PROBLEMS, OR AS DIRECTED BY CONTROLLING MUNICIPAL AUTHORITIES, AT NO ADDITIONAL EXPENSE TO THE OWNER.
3. AN EROSION CONTROL BARRIER SHALL BE INSTALLED ALONG THE EDGE OF PROPOSED DEVELOPMENT AS INDICATED IN THE PLAN PRIOR TO COMMENCEMENT OF DEMOLITION OR CONSTRUCTION OPERATIONS.
4. SEDIMENT CONTROL MEASURES SHALL BE ADJUSTED TO MEET FIELD CONDITIONS AT THE TIME OF AND DURING ALL PHASES OF CONSTRUCTION AND BE CONSTRUCTED PRIOR TO AND IMMEDIATELY AFTER ANY GRADING OR DISTURBANCE OF EXISTING SURFACE MATERIAL ON THE SITE.
5. AFTER ANY SIGNIFICANT RAINFALL (GREATER THAN 0.25 INCHES OF RAINFALL WITHIN 24 HOURS), SEDIMENT CONTROL STRUCTURES SHALL BE INSPECTED FOR INTEGRITY. ANY DAMAGE SHALL BE CORRECTED IMMEDIATELY.
6. PERIODIC INSPECTION AND MAINTENANCE OF ALL SEDIMENT CONTROL STRUCTURES SHALL BE PROVIDED TO ENSURE THAT THE INTENDED PURPOSE IS ACCOMPLISHED. THE CONTRACTOR SHALL BE RESPONSIBLE FOR ALL SEDIMENT LEAVING THE LIMIT OF WORK. SEDIMENT CONTROL MEASURES SHALL BE IN WORKING CONDITION AT THE END OF EACH WORKING DAY.
7. THE CONTRACTOR SHALL BE RESPONSIBLE FOR PREVENTING SEDIMENT FROM ENTERING ANY STORM DRAINAGE SYSTEM AND FROM BEING CONVEYED TO ANY WETLAND RESOURCE AREA, PUBLIC WAYS, ABUTTING PROPERTY, OR OUTSIDE OF THE PROJECT LIMITS.
8. THE CONTRACTOR SHALL PROTECT ALL DRAINAGE SWALES AND GROUND SURFACES WITHIN THE LIMIT OF WORK FROM EROSIVE CONDITIONS. STRAW BALE, CRUSHED STONE OR EQUIVALENT CHECK DAMS ARE TO BE PROVIDED AT A MAXIMUM OF TWO HUNDRED (200) FOOT SPACING, OR LESS AS SITE-SPECIFIC CONDITIONS WARRANT, WITHIN ALL DRAINAGE SWALES AND DITCHES AND AT UPSTREAM SIDES OF ALL DRAINAGE INLETS.
9. ALL STOCK PILES SHALL BE PROTECTED AND LOCATED A MINIMUM OF 100' FROM EXISTING WETLAND RESOURCE AREAS & WITHIN THE LIMIT OF WORK.
10. ANY SEDIMENT TRACKED ONTO PAVED AREAS SHALL BE SWEPT AT THE END OF EACH WORKING DAY.
11. ALL SEDIMENT RETAINED BY EROSION AND SEDIMENT CONTROL MEASURES SHALL BE LEGALLY DISPOSED OF OFFSITE.
12. TEMPORARY DIVERSION DITCHES, PERMANENT DITCHES, CHANNELS, EMBANKMENTS, AND ANY DENUDED SURFACE THAT WILL BE EXPOSED FOR A PERIOD OF 14 CALENDAR DAYS OR MORE SHALL BE CONSIDERED CRITICAL VEGETATION AREAS. THESE AREAS SHALL BE STABILIZED/PROTECTED WITH APPROPRIATE EROSION CONTROL MATTING OR OTHER EROSION CONTROL METHODS.
13. DUST SHALL BE CONTROLLED BY WATERING OR OTHER APPROVED METHODS AS DIRECTED BY THE PERMITTING AUTHORITY OR OWNER.
14. THE CONTRACTOR SHALL USE TEMPORARY SEEDING, MULCHING, OR OTHER APPROVED STABILIZATION MEASURES TO PROTECT EXPOSED AREAS DURING PROLONGED CONSTRUCTION OR OTHER LAND DISTURBANCE. STOCKPILES THAT WILL BE EXPOSED FOR LONGER THAN 14 DAYS SHALL BE STABILIZED.
15. THE CONTRACTOR IS RESPONSIBLE FOR REMOVAL OF ALL EROSION AND SEDIMENT CONTROLS AT THE COMPLETION OF SITE CONSTRUCTION, BUT ONLY WHEN DIRECTED BY THE CITY OF BOSTON CONSERVATION AGENT. STABILIZE OR SEED BARE AREAS LEFT AFTER EROSION CONTROL REMOVAL.

EARTH MOVING AND GRADING NOTES:

1. ALL TOPSOIL ENCOUNTERED WITHIN THE WORK AREA SHALL BE STRIPPED TO ITS FULL DEPTH AND STOCKPILED FOR REUSE. EXCESS TOPSOIL SHALL BE REMOVED FROM THE SITE UNLESS OTHERWISE DIRECTED BY THE OWNER. TOPSOIL PILES SHALL REMAIN SEGREGATED FROM EXCAVATED SUBSURFACE SOIL MATERIALS.
2. GRADES WITHIN HANDICAP PARKING SPACES AND ACCESS AISLES SHALL NOT EXCEED 1.5% IN ANY DIRECTION.
3. CROSS SLOPES OF ALL PEDESTRIAN WALKS SHALL NOT EXCEED 1.5%.
4. RUNNING SLOPE OF ALL PEDESTRIAN WALKS SHALL NOT EXCEED 4.5%, UNLESS OTHERWISE NOTED.
5. THE CONTRACTOR SHALL EXERCISE CAUTION IN ALL EXCAVATION ACTIVITY DUE TO POSSIBLE EXISTENCE OF UNRECORDED UTILITY LINES.
6. ALL PAVED AREAS MUST PITCH TO DRAIN AT A MINIMUM OF 1% UNLESS OTHERWISE NOTED.
7. PROVIDE POSITIVE DRAINAGE AWAY FROM FACE OF BUILDINGS AT ALL LOCATIONS.
8. PITCH EVENLY BETWEEN CONTOUR LINES AND BETWEEN SPOT GRADES. SPOT GRADE ELEVATIONS TAKE PRECEDENCE OVER CONTOUR LINES.
9. ALL PROPOSED TOP OF CURB ELEVATIONS ARE SIX INCHES (6") ABOVE BOTTOM OF CURB ELEVATIONS UNLESS OTHERWISE NOTED. ALL PROPOSED TOP OF CAPE COD BERM ELEVATIONS ARE FOUR INCHES (4") ABOVE BOTTOM OF CURB ELEVATION UNLESS OTHERWISE NOTED.
10. THE CONTRACTOR SHALL BLEND NEW GRADING SMOOTHLY INTO EXISTING GRADING AT LIMITS OF GRADING.
11. WHERE NEW PAVING MEETS EXISTING PAVING, MEET LINE AND GRADE OF EXISTING PAVING WITH SMOOTH TRANSITION BETWEEN EXISTING AND NEW SURFACES.
12. THE CONTRACTOR SHALL VERIFY EXISTING GRADES IN THE FIELD AND REPORT ANY DISCREPANCIES IMMEDIATELY TO THE ARCHITECT OR OWNER'S REPRESENTATIVE PRIOR TO STARTING WORK.
13. PITCH TOPS OF ALL WALLS AT ONE-EIGHTH INCH (1/8") PER FOOT FROM BACK OF WALL TO FACE OF WALL.
14. SURPLUS MATERIALS SHALL BE REMOVED FROM THE SITE UNLESS DIRECTED BY THE OWNER OR OWNER'S REPRESENTATIVE. REFER TO EARTHWORK SPECIFICATIONS.
15. ANY AREAS OUTSIDE OF THE LIMIT OF WORK THAT ARE DISTURBED SHALL BE RESTORED BY THE CONTRACTOR TO THE PRE-CONSTRUCTION CONDITION/GRADE AT NO COST TO THE OWNER.
16. EXCAVATION REQUIRED WITHIN PROXIMITY OF EXISTING UTILITY LINES SHALL BE DONE BY HAND. CONTRACTOR SHALL REPAIR ANY DAMAGE TO EXISTING UTILITY LINES OR STRUCTURES INCURRED DURING CONSTRUCTION OPERATIONS AT NO ADDITIONAL COST TO OWNER.

GENERAL NOTES:

1. TOPOGRAPHIC DATA, PROPERTY LINE INFORMATION, AND EXISTING SITE FEATURES WERE OBTAINED FROM A PLAN ENTITLED "EXISTING CONDITIONS PLAN URBAN FARM PARCEL PARCEL 2B-9 BOSTON (WEST ROXBURY DISTRICT) MASS.", PREPARED BY FELDMAN LAND SURVEYORS, DATED MARCH 03, 2022.
2. FLOODPLAIN INFORMATION WAS OBTAINED FROM THE FLOOD INSURANCE RATE MAP (FIRM) NO. 25025C0086G. THE SITE IS IN ZONE X.
3. THE CONTRACTOR SHALL COMPLY WITH MASSACHUSETTS GENERAL LAWS CHAPTER 82, SECTION 40, AS AMENDED, WHICH STATES THAT NO ONE MAY EXCAVATE IN THE COMMONWEALTH OF MASSACHUSETTS EXCEPT IN AN EMERGENCY WITHOUT 72 HOURS NOTICE, EXCLUSIVE OF SATURDAYS, SUNDAYS, AND LEGAL HOLIDAYS, TO NATURAL GAS PIPELINE COMPANIES, AND MUNICIPAL UTILITY DEPARTMENTS THAT SUPPLY GAS, ELECTRICITY, TELEPHONE, OR CABLE TELEVISION SERVICE IN OR TO THE CITY OR TOWN WHERE THE EXCAVATION IS TO BE MADE. THE CONTRACTOR SHALL CALL "DIG SAFE" AT 1-888-DIG-SAFE.
4. THE CONTRACTOR SHALL COMPLY WITH MASSACHUSETTS GENERAL LAWS CHAPTER 82A, ALSO REFERRED TO AS JACKIE'S LAW, AS DETAILED IN SECTION 520 CMR 14.00 OF THE CODE OF MASSACHUSETTS REGULATIONS.
5. THE CONTRACTOR SHALL COMPLY WITH ALL APPLICABLE FEDERAL, STATE, AND LOCAL LAWS, RULES, REGULATIONS AND SAFETY CODES IN THE CONSTRUCTION OF ALL IMPROVEMENTS.
6. THE LOCATIONS AND ELEVATIONS OF ALL EXISTING UTILITIES ARE APPROXIMATE AND ALL UTILITIES MAY NOT BE SHOWN. PRESENCE AND LOCATIONS OF ALL UTILITIES WITHIN THE LIMIT OF WORK MUST BE DETERMINED BY THE CONTRACTOR PRIOR TO COMMENCEMENT OF CONSTRUCTION ACTIVITY. THE CONTRACTOR SHALL BE RESPONSIBLE FOR IDENTIFYING AND CONTACTING THE CONTROLLING AUTHORITIES AND/OR UTILITY COMPANIES RELATIVE TO THE LOCATIONS AND ELEVATIONS OF THEIR LINES. THE CONTRACTOR SHALL KEEP A RECORD OF ANY DISCREPANCIES OR CHANGES IN THE LOCATIONS OF ANY UTILITIES SHOWN OR ENCOUNTERED DURING CONSTRUCTION. ANY DISCREPANCIES SHALL BE REPORTED TO THE OWNER AND NITSCH ENGINEERING. ANY DAMAGE RESULTING FROM THE FAILURE OF THE CONTRACTOR TO MAKE THESE DETERMINATIONS AND CONTACTS SHALL BE BORNE BY THE CONTRACTOR.
7. THE CONTRACTOR SHALL, THROUGHOUT CONSTRUCTION, TAKE ADEQUATE PRECAUTIONS TO PROTECT ALL WALKS, GRADING, SIDEWALKS AND SITE DETAILS OUTSIDE OF THE LIMIT OF WORK AS DEFINED ON THE DRAWINGS AND SHALL REPAIR AND REPLACE OR OTHERWISE MAKE GOOD AS DIRECTED BY THE ENGINEER OR OWNER'S DESIGNATED REPRESENTATIVE ANY SUCH OR OTHER DAMAGE SO CAUSED.
8. THE CONTRACTOR SHALL BE SOLELY RESPONSIBLE FOR JOB SITE SAFETY AND ALL CONSTRUCTION MEANS AND METHODS.
9. PRIOR TO BEGINNING CONSTRUCTION, THE CONTRACTOR SHALL BECOME FAMILIAR WITH THE SITE AND CONSTRUCTION DOCUMENTS TO DEVELOP A THOROUGH UNDERSTANDING OF THE PROJECT, INCLUDING ANY SPECIAL CONDITIONS AND CONSTRAINTS.
10. IT IS THE CONTRACTOR'S RESPONSIBILITY TO BECOME FAMILIAR WITH THE PROJECT SITE AND TO VERIFY ALL CONDITIONS IN THE FIELD AND REPORT DISCREPANCIES BETWEEN PLANS AND ACTUAL CONDITIONS TO THE OWNER OR OWNER'S REPRESENTATION IMMEDIATELY.
11. THE CONTRACTOR SHALL CONDUCT ALL NECESSARY CONSTRUCTION NOTIFICATIONS AND APPLY FOR AND OBTAIN ALL NECESSARY CONSTRUCTION PERMITS.
12. THE CONTRACTOR IS SOLELY RESPONSIBLE FOR THE ESTABLISHMENT AND USE OF ALL VERTICAL AND HORIZONTAL CONSTRUCTION CONTROLS.
13. ELEVATIONS REFER TO BOSTON CITY BASE.
14. THE CONTRACTOR SHALL COMPLY WITH THE ORDER OF CONDITIONS DATED APRIL 24, 2023 AND ISSUED BY THE BOSTON CONSERVATION COMMISSION (DEP #006-1931).
15. FOR SOIL INFORMATION REFER TO GEOTECHNICAL REPORT.

UTILITY NOTES:

1. ALL UTILITY CONNECTIONS ARE SUBJECT TO THE APPROVAL OF, AND GRANTING OF PERMITS BY, THE LOCAL MUNICIPALITY. IT SHALL BE THE SOLE RESPONSIBILITY OF THE CONTRACTOR TO OBTAIN ALL PERMITS AND APPROVALS RELATED TO UTILITY WORK PRIOR TO COMMENCEMENT OF CONSTRUCTION.
2. THE CONTRACTOR SHALL BE SOLELY RESPONSIBLE FOR OBTAINING ALL PERMISSIONS FOR, AND FOR CONDUCTING ALL PREPARATIONS RELATED TO, WORK AFFECTING ANY UTILITIES WITHIN THE JURISDICTION OF ANY NON-MUNICIPAL UTILITY COMPANY, INCLUDING BUT NOT LIMITED TO ELECTRIC, TELEPHONE, AND/OR GAS. THE CONTRACTOR SHALL NOTIFY ALL APPROPRIATE AGENCIES, DEPARTMENTS, AND UTILITY COMPANIES, IN WRITING, AT LEAST 7 DAYS (OR PER UTILITY COMPANY REQUIREMENT) AND NOT MORE THAN 30 DAYS PRIOR TO ANY CONSTRUCTION.
3. THE CONTRACTOR SHALL MAINTAIN UTILITIES SERVICING BUILDINGS AND FACILITIES WITHIN OR OUTSIDE THE PROJECT LIMIT UNLESS THE INTERRUPTION OF SERVICE IS COORDINATED WITH THE OWNER.
4. ALL WATER, SEWER, AND DRAIN WORK SHALL BE PERFORMED ACCORDING TO THE REQUIREMENTS AND STANDARD SPECIFICATIONS OF THE LOCAL MUNICIPALITY.
5. GAS, TELECOMMUNICATIONS AND ELECTRIC SERVICES ARE TO BE DESIGNED BY EACH UTILITY COMPANY IN COORDINATION WITH THE MECHANICAL, ELECTRIC, AND PLUMBING CONSULTANTS.
6. THE CONTRACTOR SHALL COORDINATE CONSTRUCTION ACTIVITIES OF NEW UTILITIES WITH GAS, TELECOMMUNICATION AND ELECTRICAL SERVICES.
7. INSTALL WATER LINES WITH A MINIMUM OF FIVE FEET OF COVER AND A MAXIMUM OF SEVEN FEET COVER FROM THE FINAL DESIGN GRADES.
8. MAINTAIN 10 FEET HORIZONTAL SEPARATION AND 18 INCHES VERTICAL SEPARATION (WATER OVER SEWER) BETWEEN SEWER AND WATER LINES. WHEREVER THERE IS LESS THAN 10 FEET OF HORIZONTAL SEPARATION AND 18 INCHES OF VERTICAL SEPARATION BETWEEN A PROPOSED OR EXISTING SEWER LINE TO REMAIN AND A PROPOSED OR EXISTING WATER LINE TO REMAIN BOTH WATER MAIN AND SEWER MAIN SHALL BE CONSTRUCTED OF MECHANICAL JOINT CEMENT LINED DUCTILE IRON PIPE FOR A DISTANCE OF 10-FEET ON EITHER SIDE OF THE CROSSING. ONE (1) FULL LENGTH OF WATER PIPE SHALL BE CENTERED OVER THE SEWER AT THE CROSSING.
9. THE CONTRACTOR SHALL MAINTAIN ALL EXISTING UTILITIES EXCEPT THOSE NOTED TO BE ABANDONED AND/OR REMOVED & DISPOSED.
10. THE GENERAL CONTRACTOR IS RESPONSIBLE FOR TRENCHING, BACKFILLING, AND SURFACE RESTORATION FOR GAS UTILITY SYSTEMS.
11. ALL ONSITE UTILITIES SHALL BE INSTALLED UNDERGROUND UNLESS OTHERWISE NOTED.
12. ALL EXISTING AND PROPOSED MANHOLE FRAMES, COVERS, VALVES, CLEANOUTS, CASTINGS, ETC. SHALL BE RAISED TO FINISHED GRADE PRIOR TO FINAL GRADING AND PAVING CONSTRUCTION.
13. ALL GRATES IN WALKWAYS SHALL BE ADA COMPLIANT.

PROPOSED LEGEND

- LIMIT OF WORK
- EXISTING UTILITY TO BE ABANDONED, REMOVED AND DISPOSED IF IN CONFLICT WITH NEW SITE IMPROVEMENTS, OR AS INDICATED ON DRAWINGS
- EROSION CONTROL BARRIER
- x — x — CONSTRUCTION FENCE
- W — DOMESTIC WATER PIPE
- FP — FIRE PROTECTION PIPE
- S — SANITARY SEWER PIPE
- D — STORM DRAIN PIPE
- INLET PROTECTION
- LIMIT OF STABILIZED GRASS AREA
- CO● CLEANOUT
- ● ■ AREA DRAIN
- ● ■ ACCESS BASIN
- DRAIN MANHOLE
- WATER QUALITY STRUCTURE
- CATCH BASIN
- SEWER MANHOLE
- WV WATER VALVE
- HYD FIRE HYDRANT

ABBREVIATIONS

AB	ACCESS BASIN
AD	AREA DRAIN
BC	BOTTOM OF CURB ELEVATION
BW	BOTTOM OF WALL ELEVATION
CB	CATCH BASIN
CO	CLEANOUT
COP	CENTER OF PIPE
CPP	CORRUGATED POLYETHYLENE PIPE
DI	DUCTILE IRON PIPE CEMENT LINED
DMH	DRAIN MANHOLE
FFE	FINISHED FLOOR ELEVATION
HYD	FIRE HYDRANT
INV	INVERT ELEVATION
LF	LINEAR FEET
LOW	LIMIT OF WORK
M&P	MAINTAIN AND PROTECT
NIC	NOT IN CONTRACT
OC	ON CENTER
OCS	OUTLET CONTROL STRUCTURE
PERF	PERFORATED
PVC	POLYVINYL CHLORIDE PIPE
R&D	REMOVE AND DISPOSE
R&S	REMOVE AND STOCKPILE
RD	ROOF DRAIN
RIM	RIM ELEVATION
SMH	SEWER MANHOLE
TC	TOP OF CURB ELEVATION
TW	TOP OF WALL ELEVATION
THH	TELECOM HANDHOLE
TMH	TELECOM MANHOLE
TOP	TOP OF PIPE
TOD	TOP OF DUCT BANK
TYP	TYPICAL
UD	UNDERDRAIN
VGC	VERTICAL GRANITE CURB
WQI	WATER QUALITY INLET
WQS	WATER QUALITY STRUCTURE
WV	WATER VALVE

BWSC & CONTRACTOR NOTES:

1. THE ESTIMATED SANITARY SEWAGE DISCHARGE IS 500 GALLONS PER DAY (GPD). THIS ESTIMATE IS BASED ON 310 C.M.R. 15.000 THE STATE ENVIRONMENTAL CODE, TITLE 5: STANDARD REQUIREMENTS FOR THE SITING, CONSTRUCTION, INSPECTION, UPGRADE AND EXPANSION OF ON-SITE SEWAGE TREATMENT AND DISPOSAL SYSTEMS AND FOR THE TRANSPORT AND DISPOSAL OF SEPTAGE.
2. THE ESTIMATED DAILY WATER USE IS 550 GPD BASED ON THE ESTIMATED SANITARY SEWAGE DISCHARGE WITH A 10% PEAKING FACTOR. THE PEAK DOMESTIC FLOW BASED ON FIXTURE COUNTS IS APPROXIMATELY XX GPM [FROM MEP].
3. THE BWSC SHALL PROVIDE A 5/8" DISC TYPE WATER METER AND METER TRANSMITTER UNIT (MTU).
4. BACKWATER VALVES SHALL BE PROVIDED BY THE PLUMBER AT ALL GRAVITY SANITARY SEWER AND STORM DRAIN CONNECTIONS FOR ANY FIXTURE LOCATED AT AN ELEVATION BELOW THE TOP OF THE SEWER OR DRAIN MANHOLE.
5. THE CONTRACTOR SHALL NOTIFY THE BWSC CROSS-CONNECTION DEPARTMENT AT 617-989-7283 ONCE BACKWATER VALVES ARE INSTALLED FOR BWSC INSPECTION.
6. DYE TESTING SHALL BE PERFORMED ON NEW STORM DRAIN AND SANITARY SEWER CONNECTIONS AFTER INSTALLATION IS COMPLETE. DYE TESTS SHALL BE WITNESSED BY THE BWSC.
7. A PREREQUISITE FOR FILING A GENERAL SERVICE APPLICATION WITH THE BWSC FOR NEW CONSTRUCTION IS THE ROUGH CONSTRUCTION SIGN-OFF DOCUMENT FROM THE CITY OF BOSTON'S INSPECTIONAL SERVICES DEPARTMENT.
8. AN AS-BUILT PLAN (AUTOCAD 2016 OR EARLIER RELEASE) SHALL BE PROVIDED BY THE CONTRACTOR AND ENDORSED BY A CIVIL ENGINEER OR PROFESSIONAL LAND SURVEYOR SHOWING THE LOCATION, DEPTH, AND INVERT OF EVERY BEND, FITTING, VALVE, CLEANOUT AND ANCHOR. THE AS-BUILT DRAWING SHALL BE SUBMITTED TO THE BOSTON AND WATER SEWER COMMISSION FOR REVIEW AND APPROVAL.
9. WATER SHUT DOWN SHALL BE COORDINATED WITH BWSC WATER OPERATIONS, (617) 989-7276, 24 HOURS NOTICE REQUIRED.
10. PROVIDE "DON'T DUMP" PLAQUES AT ALL CATCH BASIN AND DRAIN INLET LOCATIONS. "DON'T DUMP" PLAQUES TO BE PURCHASED FROM BWSC.
11. THE CONTRACTOR SHALL PURCHASE THE NEW HYDRANT(S) FROM THE BWSC. THE CONTRACTOR SHALL PURCHASE THE HYDRANT(S) FROM THE COMMISSION WHEN FILING THE GENERAL SERVICE APPLICATION.

COPYRIGHT WARNER LARSON, INC. 2022

WARNER LARSON
LANDSCAPE ARCHITECTS
150 WEST BROADWAY, BOSTON MA 02127
617.464.1440 warnerlarson.com

Nitsch Engineering
www.nitschengr.com
2 Center Plaza, Suite 430
Boston, MA 02108
T: (617) 338-0063
F: (617) 338-6472
• Civil Engineering
• Land Surveying
• Transportation Engineering
• Land Development
• Water Infrastructure
• Planning
• GIS

BROOKE CHARTER HIGH SCHOOL: MATTAPAN COMMUNITY FIELD

BOSTON, MASSACHUSETTS

COMMONWEALTH OF MASSACHUSETTS
JOHN M. SCHMID
CIVIL
No. 39155
REGISTERED PROFESSIONAL ENGINEER
12/19/2023

REVISIONS

NO.	DATE	DESCRIPTION
	05/24/23	BWSC RESUBMISSION
	10/25/23	DEP APPEAL SUBMISSION

DATE: 07-21-2022
SCALE: AS NOTED
JOB #: BROOKE CHARTER HS
DRAWN BY: AAC

CIVIL NOTES, LEGEND, AND ABBREVIATIONS

C-1

COPYRIGHT WARNER LARSON, INC. 2022

WARNER LARSON
LANDSCAPE ARCHITECTS
150 WEST BROADWAY, BOSTON MA 02127
617.464.1440 warnerlarson.com

Nitsch Engineering
www.nitschengr.com
2 Center Plaza, Suite 430
Boston, MA 02108
T: (617) 338-8921
F: (617) 338-6472
• Civil Engineering
• Land Surveying
• Site Evaluation, Design, Permitting
• Water Resources
• Asset Management
• Fiber Optics
• ITS

BROOKE CHARTER HIGH SCHOOL: MATTAPAN COMMUNITY FIELD

BOSTON, MASSACHUSETTS

COMMONWEALTH OF MASSACHUSETTS
JOHN M. SCHMID
CIVIL
No. 39155
REGISTERED PROFESSIONAL ENGINEER
12/19/2023

REVISIONS

NO.	DATE	DESCRIPTION
	05/24/23	BWSC RESUBMISSION
	10/25/23	DEP APPEAL SUBMISSION

DATE: 07-21-2022
SCALE: 1"=20'
JOB #: BROOKE CHARTER HS
DRAWN BY: AAC

EROSION AND SEDIMENTATION CONTROL PLAN

C-2

NITSCH #14017

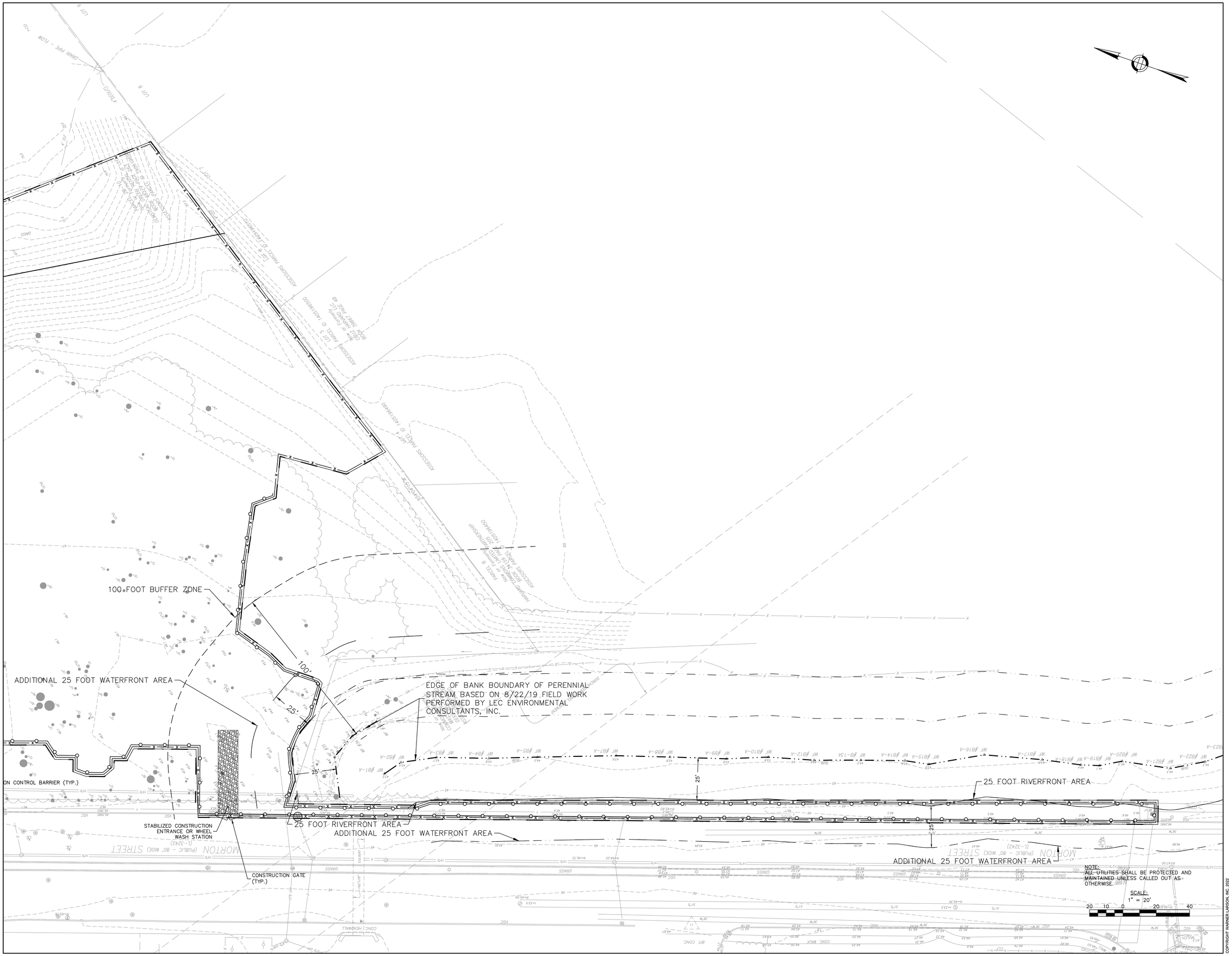

WARNER LARSON
LANDSCAPE ARCHITECTS
150 WEST BROADWAY, BOSTON MA 02127
617.464.1440 warnerlarson.com

Nitsch Engineering
www.nitscheng.com
2 Center Plaza, Suite 430
Boston, MA 02108
T: (617) 338-0063
F: (617) 338-6472
• Civil Engineering
• Land Surveying
• Transportation Engineering
• Water Resources Engineering
• Asset Infrastructure
• Planning
• GIS

BROOKE CHARTER HIGH SCHOOL: MATTAPAN COMMUNITY FIELD

BOSTON, MASSACHUSETTS

COMMONWEALTH OF MASSACHUSETTS
JOHN M. SCHMID
CIVIL
No. 39155
REGISTERED PROFESSIONAL ENGINEER
12/19/2023

REVISIONS

NO.	DATE	DESCRIPTION
	05/24/23	BWSC RESUBMISSION
	10/25/23	DEP APPEAL SUBMISSION

DATE: 07-21-2022
SCALE: 1"=20'
JOB #: BROOKE CHARTER HS
DRAWN BY: AAC

EROSION AND SEDIMENTATION CONTROL PLAN

C-2.1

COPYRIGHT WARNER LARSON, INC. 2022

NITSCH #14017

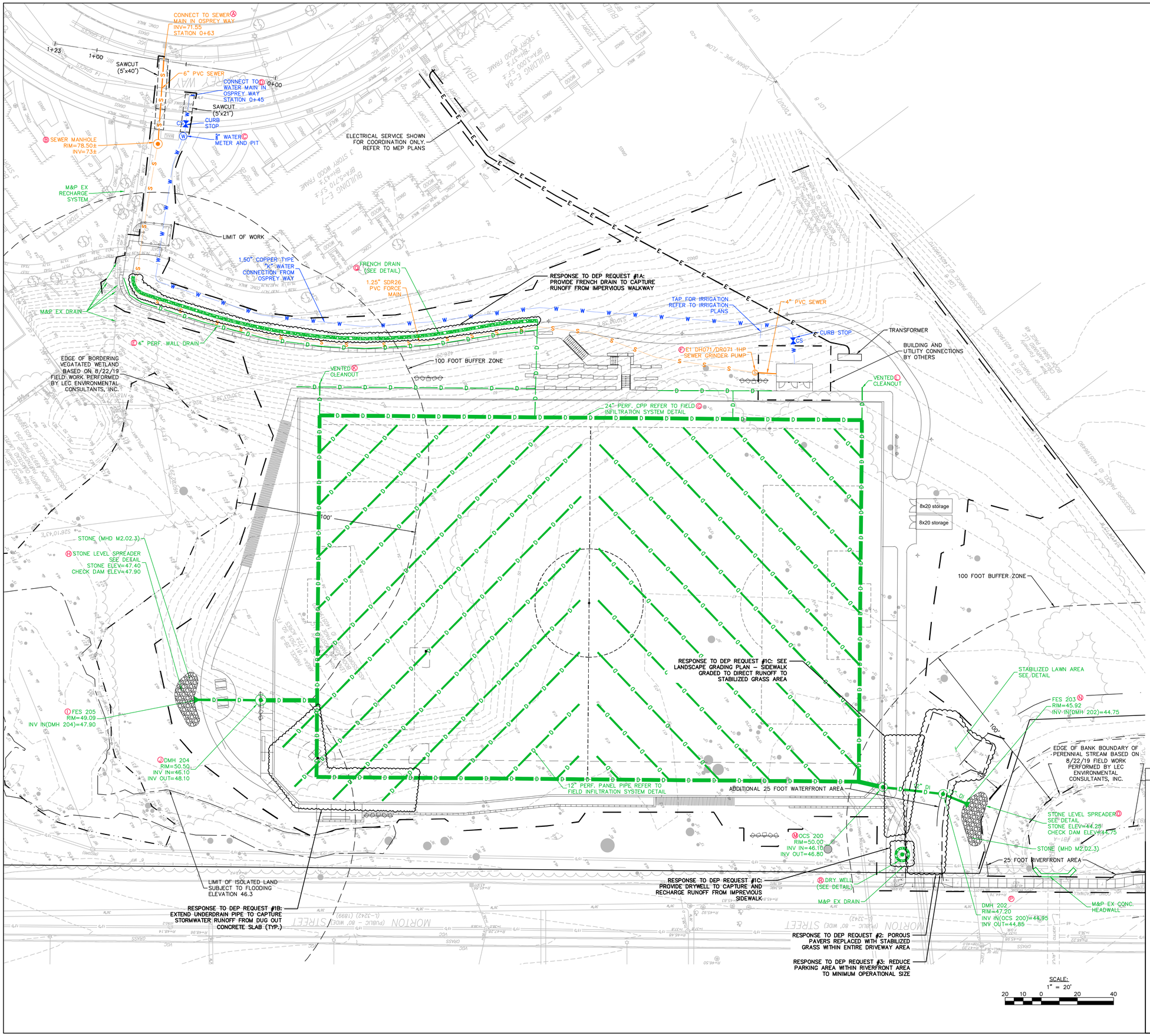

OWNER:
LENA NEW BOSTON, LLC
75 STATE STREET SUITE #1410
BOSTON, MA 02109

BUILDING ADDRESS:
550 MORTON STREET
BOSTON, MA 02124

WARD 14: PARCEL 1405196970
LAND USE CODE: RESIDENTIAL LAND

METER NUMBERS:
TO BE ASSIGNED

ACCOUNT NUMBERS:
TO BE ASSIGNED

CONTACT:
LENA NEW BOSTON, LLC
75 STATE STREET SUITE #1410
TEL.: 617-989-9322

BUILDING USE: RESIDENTIAL

BWSC SITE PLAN #22157

BWSC USE ONLY

BOSTON WATER & SEWER COMMISSION

Cross Connection

Approval: _____ Date: _____

Discharge Enforcement

Approval: _____ Date: _____

BOSTON WATER AND SEWER COMMISSION

Reviewed and approved as to proposed connection(s) to existing Water and Sewer Facilities as shown, for issue of Building Permit Only. Additional Permits must be obtained from BWSC prior to Connection to BWSC facilities. Site Plans are valid for a period of one (1) year from date of approval.

_____
JOHN P. SULLIVAN, JR. P.E.
Chief Engineer

ALL WATER, SEWER AND DRAIN SERVICE CONNECTIONS TO BOSTON WATER AND SEWER COMMISSION FACILITIES MUST BE PERFORMED BY A BONDED DRAIN LAYER LICENSED BY THE BOSTON WATER AND SEWER COMMISSION.

COPYRIGHT WARNER LARSON, INC. 2022

WARNER LARSON
LANDSCAPE ARCHITECTS
150 WEST BROADWAY, BOSTON MA 02127
617.464.1440 warnerlarson.com

Nitsch Engineering
www.nitschengr.com
2 Center Plaza, Suite 430
Boston, MA 02108
P: 617-338-8921
F: 617-338-6472
• Civil Engineering
• Land Surveying
• Site Evaluation & Design
• Water Resources
• Wastewater
• Water Mains
• Fire Protection

BROOKE CHARTER HIGH SCHOOL: MATTAPAN COMMUNITY FIELD

BOSTON, MASSACHUSETTS

COMMONWEALTH OF MASSACHUSETTS
JOHN M. SCHMID
CIVIL
No. 39155
REGISTERED PROFESSIONAL ENGINEER
12/19/2023

REVISIONS

NO.	DATE	DESCRIPTION
	05/24/23	BWSC RESUBMISSION
	10/25/23	DEP APPEAL SUBMISSION

DATE: 07-21-2022
SCALE: 1"=20'
JOB #: BROOKE CHARTER HS
DRAWN BY: AAC

SITE UTILITY PLAN

C-3

NITSCH #14017

PROPOSED RECHARGE VOLUME CALCULATIONS:

Total Impervious Area (SF) = 16,393 SF
Required Recharge = 1" storm over Impervious Area

Required Storage Volume = Roof Area + Impervious Site Area
= 15,873 SF(Impervious Site) x [1'/12"] + 520 SF (Roof) x [1'/12"]
= 1,708 CF ◄

Storage Available in Recharge System =1,000 LF of 24" Perforated CPP Pipe + Crushed Stone
Volume below bottom orifice (from HydroCAD) = 1,921 CF ◄

Volume in Dry Well =
Volume in Structure = $\pi \times r^2 \times h = (3.14159 \times 2^2) \times 4' = 50.27$ CF
Volume in Stone = Stone - Structure Volume
Volume in Stone = $(\pi \times r^2 \times h)$ - 50.27 CF x 0.3 (30% void capacity of stone) = $((3.14159 \times 3^2 \times 5')$ - 50.27 CF) x 0.3
Volume in Stone = $((3.14159 \times 3^2 \times 5')$ - 50.27 CF) x 0.3 = (141.37 CF - 50.27 CF) x 0.3 = 27.33 CF

Total Volume = 1,921 CF + 50.27 CF + 27.33 CF = 1998 CF ◄

BWSC INSPECTION SIGNOFF

	INSPECTOR	DATE	COMMENT	DYE TEST	STATION
Ⓐ – NEW 6" SEWER CONNECTION					0+63
Ⓑ – NEW SEWER MANHOLE					
Ⓒ – NEW 5/8" WATER METER AND PIT				N/A	
Ⓓ – NEW 1" COPPER TYPE "K" WATER CONNECTION				N/A	0+45
Ⓔ – NEW PERFORATED WALL DRAIN					
Ⓕ – NEW E1 1HP SEWER GRINDER PUMP					
Ⓖ – NEW FIELD INFILTRATION SYSTEM					
Ⓗ – NEW STONE LEVEL SPREADER					
Ⓘ – NEW FLARED END SECTION					
Ⓙ – NEW DRAIN MANHOLE					
Ⓚ – NEW CLEANOUT					
Ⓛ – NEW CLEANOUT					
Ⓜ – NEW OUTLET CONTROL STRUCTURE					
Ⓝ – NEW FLARED END SECTION					
Ⓞ – NEW STONE LEVEL SPREADER					
Ⓟ – NEW DRAIN MANHOLE					
Ⓠ – FRENCH DRAIN					
Ⓡ – DRY WELL					

WARNER LARSON
LANDSCAPE ARCHITECTS
130 WEST BROADWAY, BOSTON MA 02127
617.464.1440 warnerlarson.com

Nitsch Engineering
www.nitschengr.com
2 Center Plaza, Suite 430
Boston, MA 02108
T: (617) 338-0063
F: (617) 338-6472
• Civil Engineering
• Land Surveying
• Transportation Engineering
• Water Resources Engineering
• Green Infrastructure
• Planning
• GIS

BROOKE CHARTER HIGH SCHOOL: MATTAPAN COMMUNITY FIELD

BOSTON, MASSACHUSETTS

COMMONWEALTH OF MASSACHUSETTS
JOHN M. SCHMID
CIVIL
No. 39155
REGISTERED PROFESSIONAL ENGINEER
12/19/2023

REVISIONS

NO.	DATE	DESCRIPTION
	05/24/23	BWSC RESUBMISSION
	10/25/23	DEP APPEAL SUBMISSION

DATE: 07-21-2022
SCALE: 1"=20'
JOB #: BROOKE CHARTER HS
DRAWN BY: AAC

SITE UTILITY PLAN

C-3.1

COPYRIGHT WARNER LARSON, INC. 2022

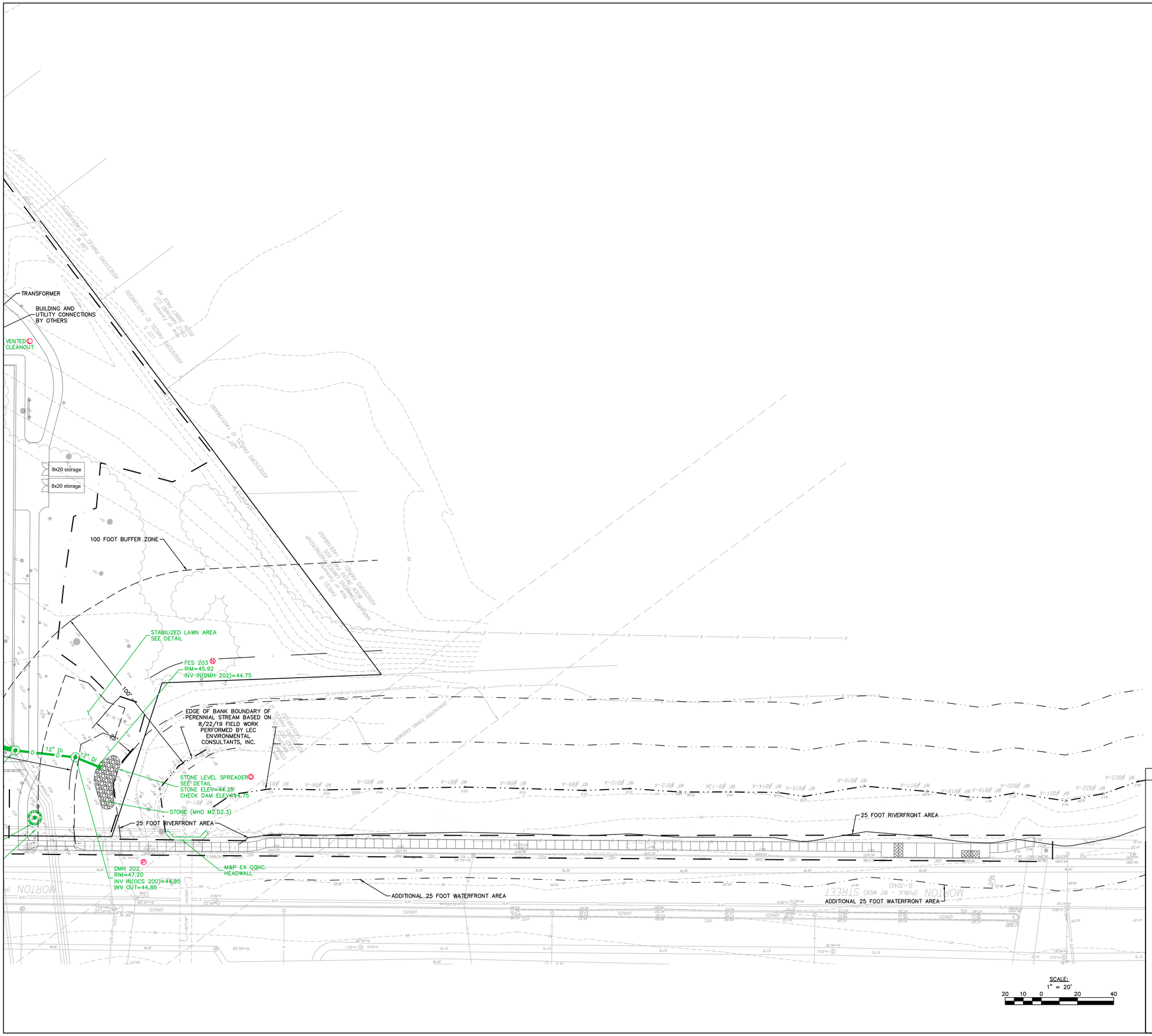

OWNER:
LENA NEW BOSTON, LLC
75 STATE STREET SUITE #1410
BOSTON, MA 02109

BUILDING ADDRESS:
550 MORTON STREET
BOSTON, MA 02124

WARD 14: PARCEL 1405196970
LAND USE CODE: RESIDENTIAL LAND

METER NUMBERS:
TO BE ASSIGNED

ACCOUNT NUMBERS:
TO BE ASSIGNED

CONTACT:
LENA NEW BOSTON, LLC
75 STATE STREET SUITE #1410
TEL.:617-989-9322

BUILDING USE: RESIDENTIAL

BWSC SITE PLAN #22157
BWSC USE ONLY

WARNER LARSON
LANDSCAPE ARCHITECTS
130 WEST BROADWAY, BOSTON MA 02127
617.464.1440 warnerlarson.com

Nitsch Engineering
www.nitschong.com
2 Center Plaza, Suite 430
Boston, MA 02108
T: (617) 338-0063
F: (617) 338-6472
• Civil Engineering
• Land Surveying
• Transportation Engineering
• Water Resources Engineering
• Asset Infrastructure Planning
• GIS

BROOKE CHARTER HIGH SCHOOL: MATTAPAN COMMUNITY FIELD

BOSTON, MASSACHUSETTS

COMMONWEALTH OF MASSACHUSETTS
JOHN M. SCHMID
CIVIL
No. 39165
REGISTERED PROFESSIONAL ENGINEER
12/19/2023

REVISIONS

NO.	DATE	DESCRIPTION
	05/24/23	BWSC RESUBMISSION
	10/25/23	DEP APPEAL SUBMISSION

DATE: 07-21-2022
SCALE: 1"=20'
JOB #: BROOKE CHARTER HS
DRAWN BY: AAC

SITE UTILITY PLAN

C-3.2

COPYRIGHT WARNER LARSON, INC. 2022

NITSCH #14017

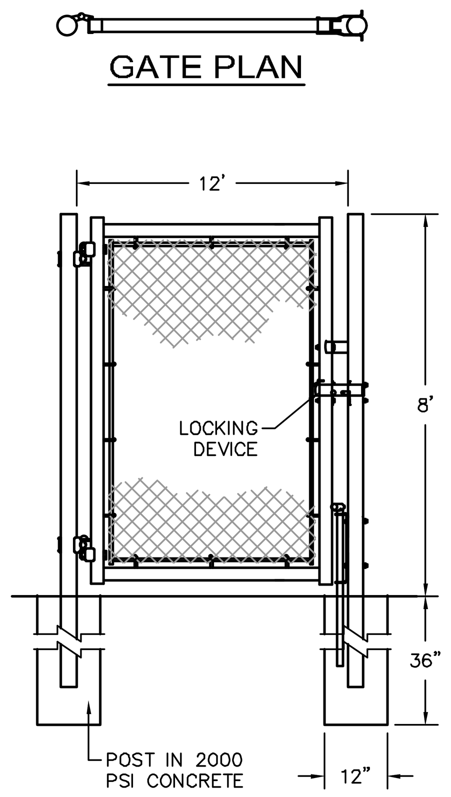

SINGLE GATE ELEVATION

12' WIDE EMERGENCY GATE

NOT TO SCALE

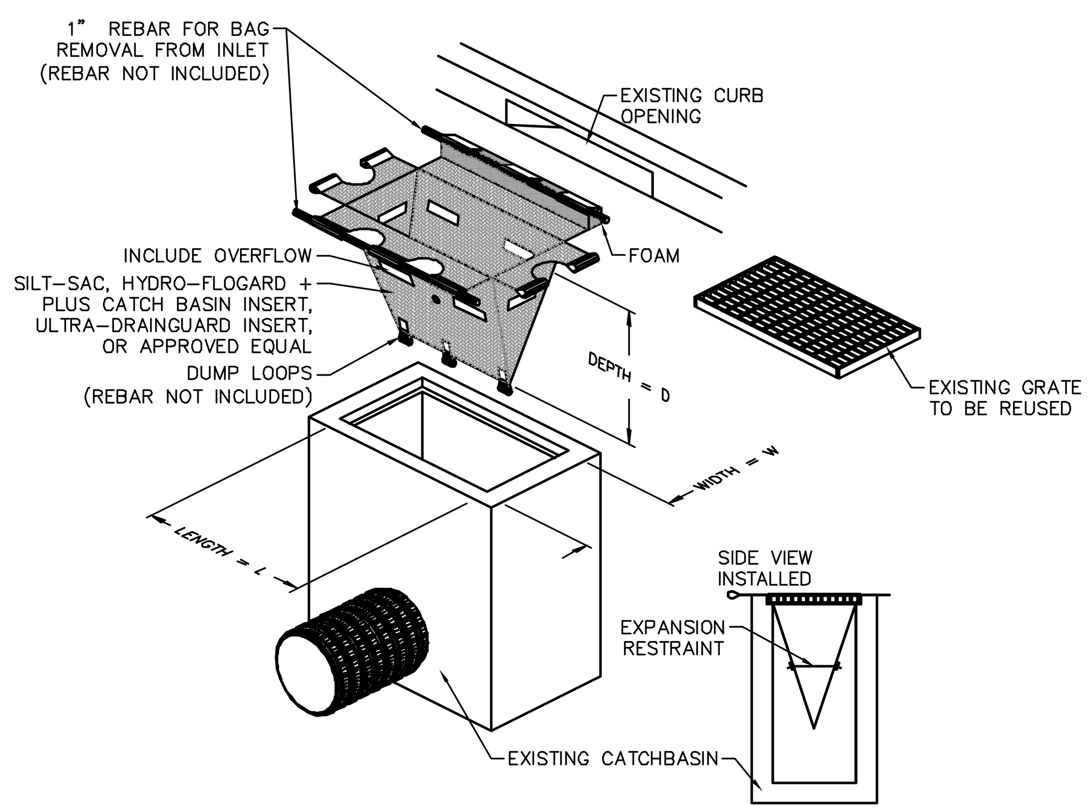

THIS METHOD OF INLET PROTECTION IS APPLICABLE WHERE THE INLET DRAINS SHEET, OVERLAND OR CONCENTRATED FLOWS (NOT GREATER THAN 1 CFS). THE METHOD CAN DRAIN FLAT AREA TO STEEP SLOPES. INLET CAPACITY WILL BE DECREASED WITH THIS METHOD AND THE CONTRACTOR SHALL EXPECT PONDING DURING HIGH FLOW EVENTS.

INLET PROTECTION
CATCH BASIN W/ SILTATION SACK

NOT TO SCALE

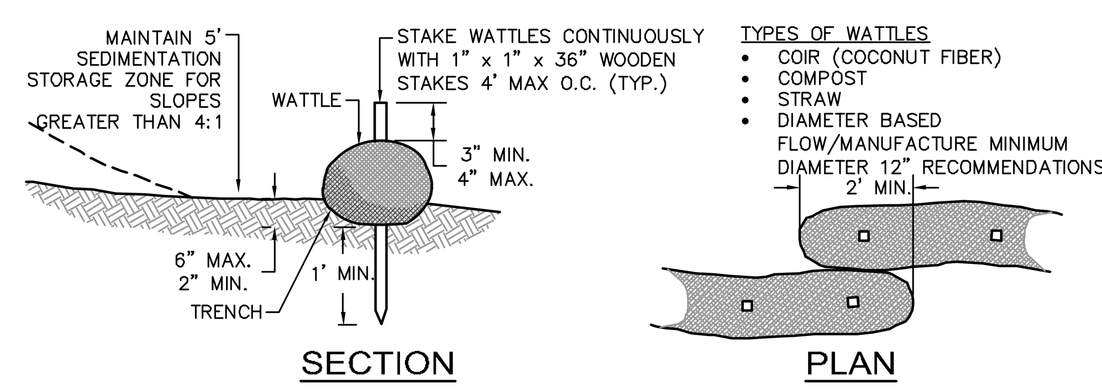

WATTLES - SLOPE PROTECTION FOR SLOPES LESS THAN 10:1

NOT TO SCALE

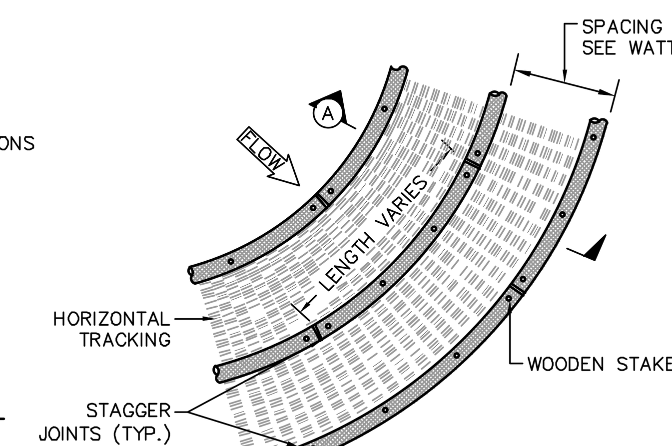

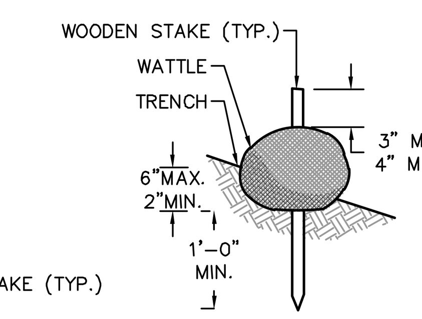

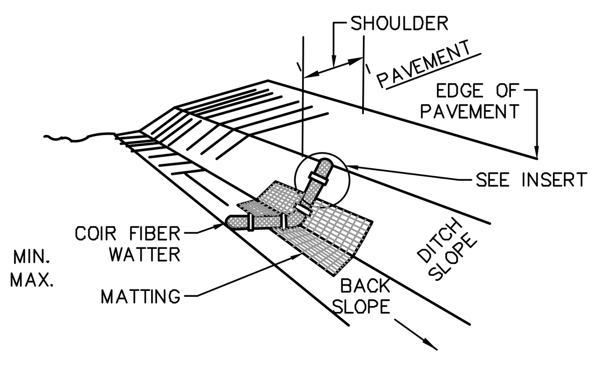

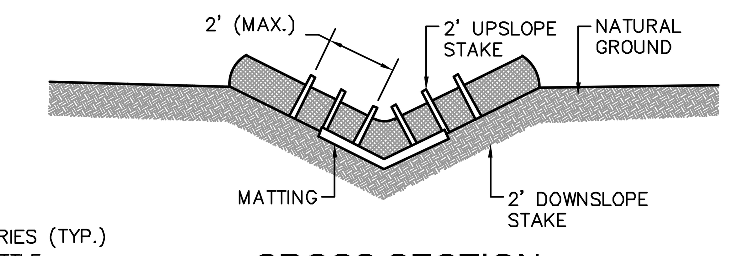

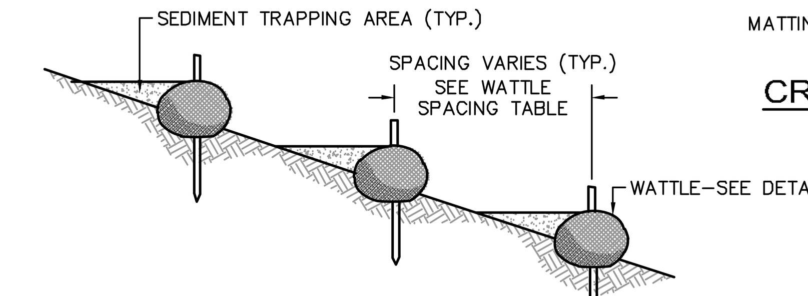

WATTLE SPACING TABLE	
SLOPE	MAX. SPACING
1:1	10'–0"
2:1	20'–0"
3:1	30'–0"
4:1	40'–0"

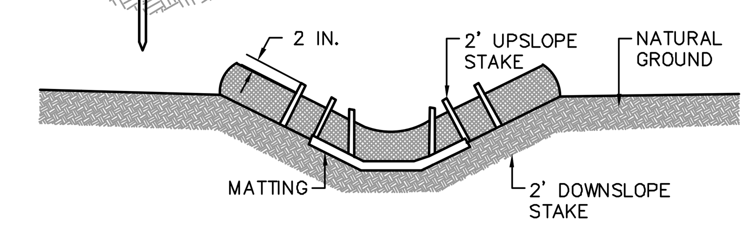

WATTLE SLOPE PROTECTION NOTES:

1. SECURELY KNOT EACH END OF WATTLE. ABUT ADJACENT WATTLES TIGHTLY, END TO END, WITHOUT OVERLAPPING THE ENDS.
2. PILOT HOLES MAY BE DRIVEN THROUGH THE WATTLES AND INTO THE SOIL WHEN SOIL CONDITIONS REQUIRE
3. WATTLES SHALL BE INSPECTED REGULARLY, AND IMMEDIATELY AFTER A RAINFALL PRODUCES RUNOFF, TO ENSURE THEY REMAIN THOROUGHLY ENTRENCHED AND IN CONTACT WITH THE SOIL.
4. ONLY INSTALL WATTLE(S) TO A HEIGHT IN DITCH SO FLOW WILL NOT WASH AROUND WATTLE AND SCOUR DITCH SLOPES AND AS DIRECTED.

TYPES OF WATTLES
- COIR (COCONUT FIBER)
- COMPOST
- STRAW

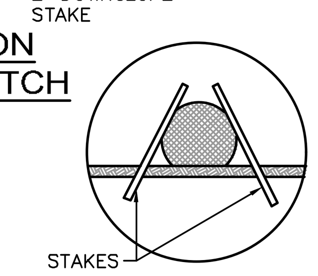

EROSION CONTROL BARRIER
WATTLES - STEEP SLOPE PROTECTION

NOT TO SCALE

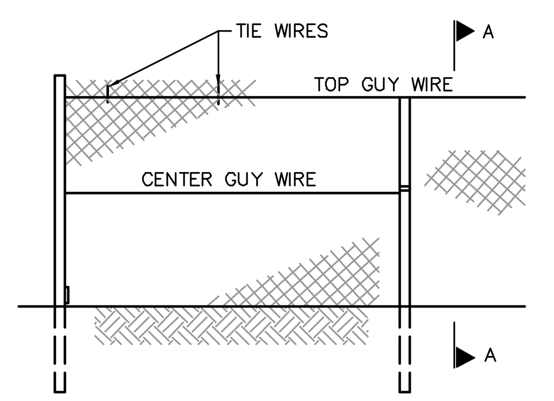

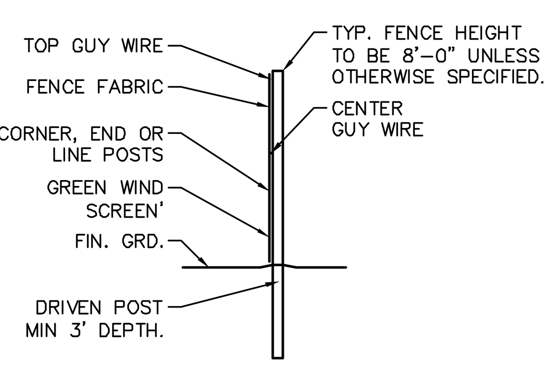

SECTION A-A

CONSTRUCTION FENCE AND GATE NOTES

1. FABRIC SHALL BE 0.148" WIRE, WOVEN INTO APPROXIMATELY 2" DIAMOND MESH.
2. THE FENCE FABRIC SHALL BE ZINC COATED STEEL OR ALUMINUM COATED STEEL.
3. FENCE POSTS SHALL RECEIVE THE SAME COATING AND TREATMENT AS THE FENCE FABRIC (DESCRIBED ABOVE).
4. THE CONTRACTOR SHALL ADD A GREEN WIND SCREEN
5. LINE POSTS SHALL BE 2½" O.D. END OR CORNER POSTS SHALL BE 3" O.D.
6. THE CONTRACTOR IS RESPONSIBLE FOR SURFACE RESTORATION ONCE THE FENCE IS REMOVED.
7. THE CONTRACTOR SHALL REMOVE AND DISPOSE OF THE TEMPORARY CONSTRUCTION FENCE AT THE CONCLUSION OF THE PROJECT.

CHAIN LINK CONSTRUCTION FENCE

NOT TO SCALE

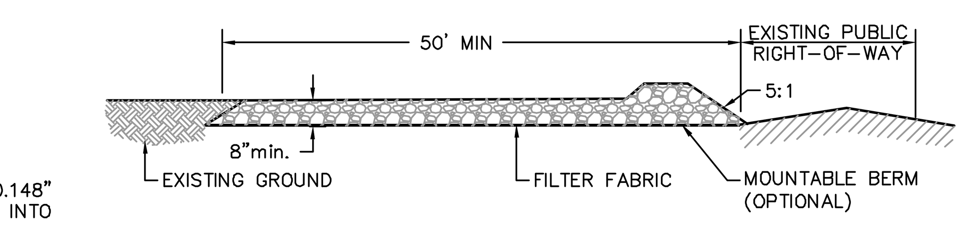

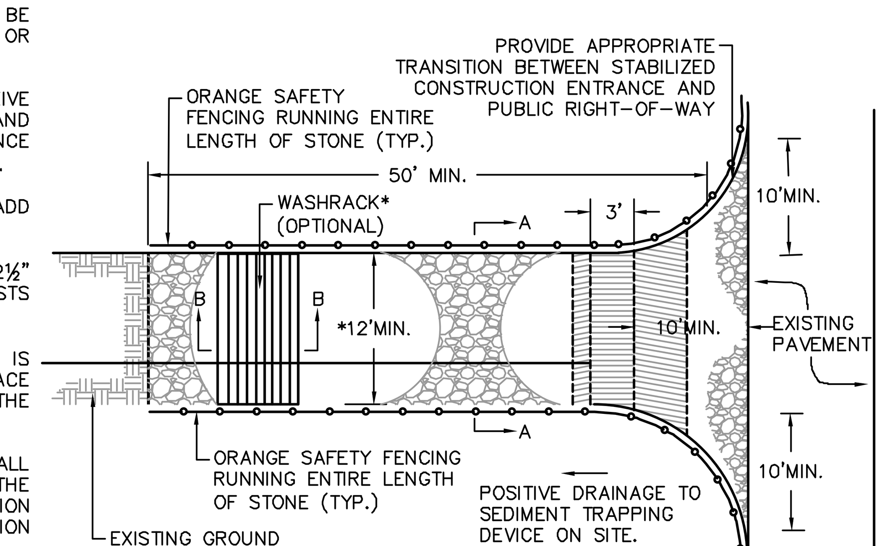

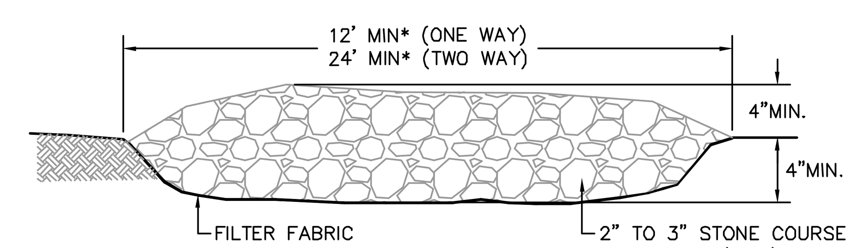

* MUST EXTEND FULL WIDTH OF INGRESS AND EGRESS OPERATION

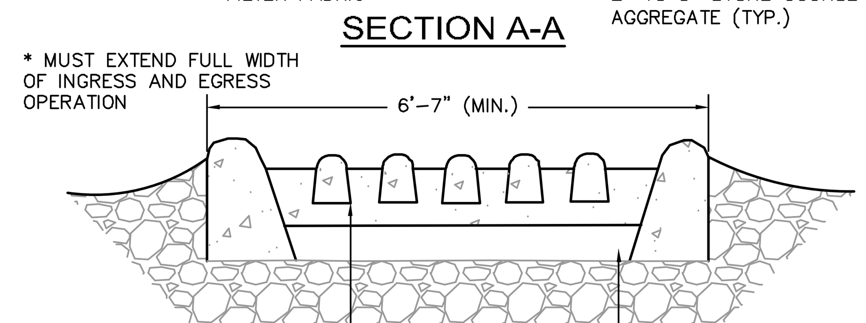

CONSTRUCTION SPECIFICATIONS

CONSTRUCTION SPECIFICATIONS

LENGTH – GREATER THAN OR EQUAL TO 50 FEET

WIDTH – TWELVE FOOT MINIMUM (ONE WAY), TWENTY FOUR FOOT MINIMUM (TWO WAY), BUT NOT LESS THAN THE FULL WIDTH AT POINTS WHERE INGRESS OR EGRESS OCCURS.

SURFACE WATER – ALL SURFACE WATER FLOWING OR DIVERTED TOWARD CONSTRUCTION ENTRANCES SHALL BE PIPED ACROSS THE ENTRANCE. IF PIPING IS IMPRACTICAL, A MOUNTABLE BERM SHALL BE PERMITTED.

THICKNESS – 8"

MAINTENANCE – THE ENTRANCE SHALL BE MAINTAINED IN A CONDITION WHICH SHALL PREVENT TRACKING OR FLOWING OF SEDIMENT ONTO PUBLIC RIGHTS–OF–WAY. THIS MAY REQUIRE PERIODIC TOP DRESSING WITH ADDITIONAL STONE AS CONDITIONS DEMAND AND REPAIR OR CLEANOUT OF ANY MEASURES USED TO TRAP SEDIMENT. ALL SEDIMENT SPILLED, DROPPED, WASHED OR TRACKED ONTO PUBLIC RIGHTS–OF–WAY MUST BE REMOVED IMMEDIATELY.

PERIODIC INSPECTION AND NEEDED MAINTENANCE SHALL BE PROVIDED.

STABILIZED CONSTRUCTION ENTRANCE

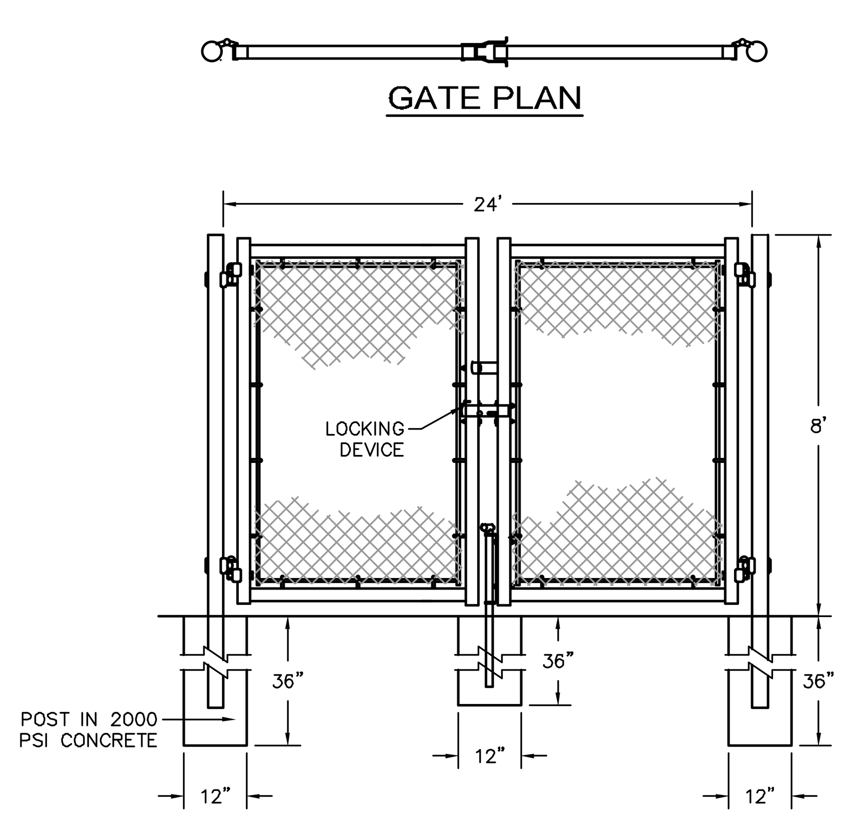

DOUBLE GATE ELEVATION

24' WIDE DOUBLE GATE

NOT TO SCALE

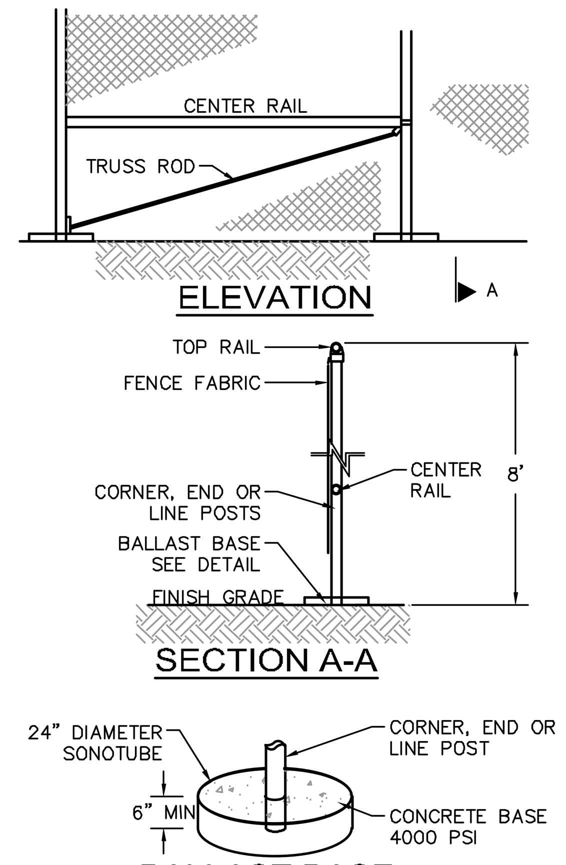

NOTES
1. END, GATE AND CORNER POSTS SHALL BE BRACED TO ADJACENT LINE POSTS. (MORE THAN 30° CHANGE IN DIRECTION CONSTITUTES A CORNER)
2. FABRIC SHALL BE 0.148" GAUGE MIN. WIRE, WOVEN INTO APPROXIMATELY 2" DIAMOND MESH.
3. ZINC–COATED STEEL FABRIC BASE METAL SHALL BE COATED WITH PRIME WESTERN SPELTER OR EQUAL.
4. ALUMINUM COATED STEEL FABRIC BASE METAL SHALL BE COATED WITH ALUMINUM ALLOY.
5. LINE POSTS SHALL BE 2½" O.D. END OR CORNER POSTS SHALL BE 3" O.D.
6. THE CONTRACTOR IS RESPONSIBLE FOR SURFACE RESTORATION ONCE THE FENCE IS REMOVED.
7. THE CONTRACTOR SHALL REMOVE AND DISPOSE OF THE TEMPORARY CONSTRUCTION FENCE AT THE CONCLUSION OF THE PROJECT.

TEMPORARY CONSTRUCTION
CHAIN LINK FENCE WITH BALLAST BASE

NOT TO SCALE

** PER MANUFACTURER'S RECOMMENDATIONS

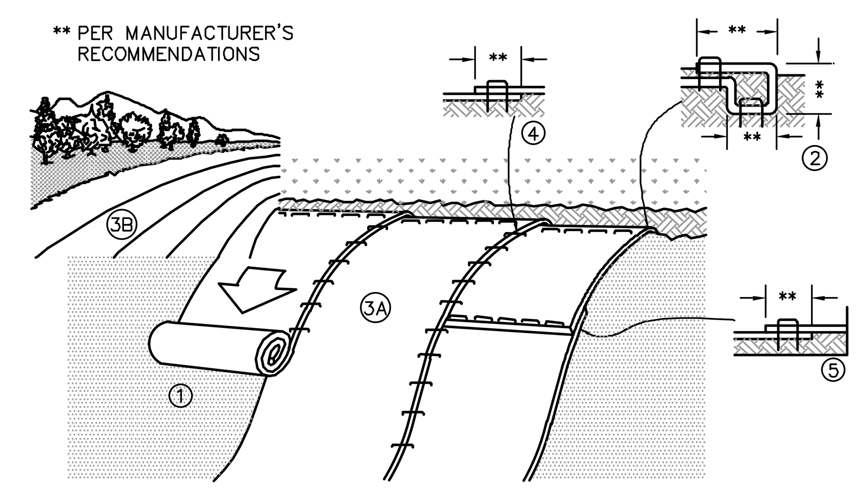

NOTES:

1. PREPARE SOIL BEFORE INSTALLING EROSION CONTROL BLANKETS (ECB's), INCLUDING ANY NECESSARY APPLICATION OF LIME, FERTILIZER, AND SEED.
2. BEGIN AT THE TOP OF THE SLOPE BY ANCHORING THE ECB's IN ACCORDANCE WITH THE MANUFACTURER'S RECOMMENDATIONS. APPLY SEED TO COMPACTED SOIL AND FOLD REMAINING PORTION OF ECB's BACK OVER SEED AND COMPACTED SOIL. SECURE ECB's OVER COMPACTED SOIL WITH A ROW OF STAKES/STAPLES SPACED ACCORDANCE TO THE MANUFACTURER'S RECOMMENDATIONS ACROSS THE WIDTH OF THE ECB's.
3. ROLL THE ECB's DOWN (A) OR HORIZONTALLY (B) ACROSS THE SLOPE. ECB's WILL UNROLL WITH APPROPRIATE SIDE AGAINST THE SOIL SURFACE. ALL ECB's MUST BE SECURELY FASTENED TO SOIL SURFACE BY PLACING STAKES/STAPLES IN APPROPRIATE LOCATIONS AS SHOWN ON THE STAKE/STAPLE PATTERN GUIDE.
4. THE EDGES OF PARALLEL ECB's MUST BE STAKED/STAPLED WITH OVERLAP DEPENDING ON ECB's TYPE. SEE THE MANUFACTURER'S RECOMMENDATIONS.
5. CONSECUTIVE ECB's SPLICED DOWN THE SLOPE MUST BE PLACED END OVER END (SHINGLE STYLE) WITH AN OVERLAP (SEE THE MANUFACTURER'S RECOMMENDATIONS). STAKE/STAPLE THROUGH OVERLAPPED AREA, ACROSS ENTIRE ECB's WIDTH PER MANUFACTURER'S RECOMMENDATIONS.
6. IN LOOSE SOIL CONDITIONS, THE USE OF STAKE OR STAPLE LENGTHS GREATER THAN 6" MAY BE NECESSARY TO PROPERLY SECURE THE ECB's.
7. THE CONTRACTOR SHALL FOLLOW ALL INSTALLATION INSTRUCTIONS AS RECOMMENDED BY THE MANUFACTURER.

TEMPORARY EROSION CONTROL
BLANKET FOR STEEP SLOPES DETAIL

NOT TO SCALE

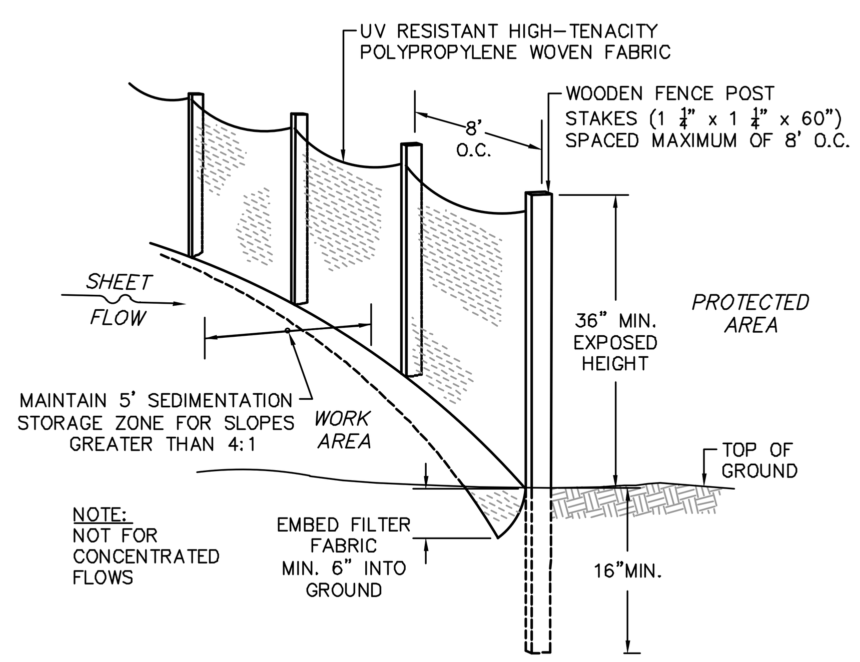

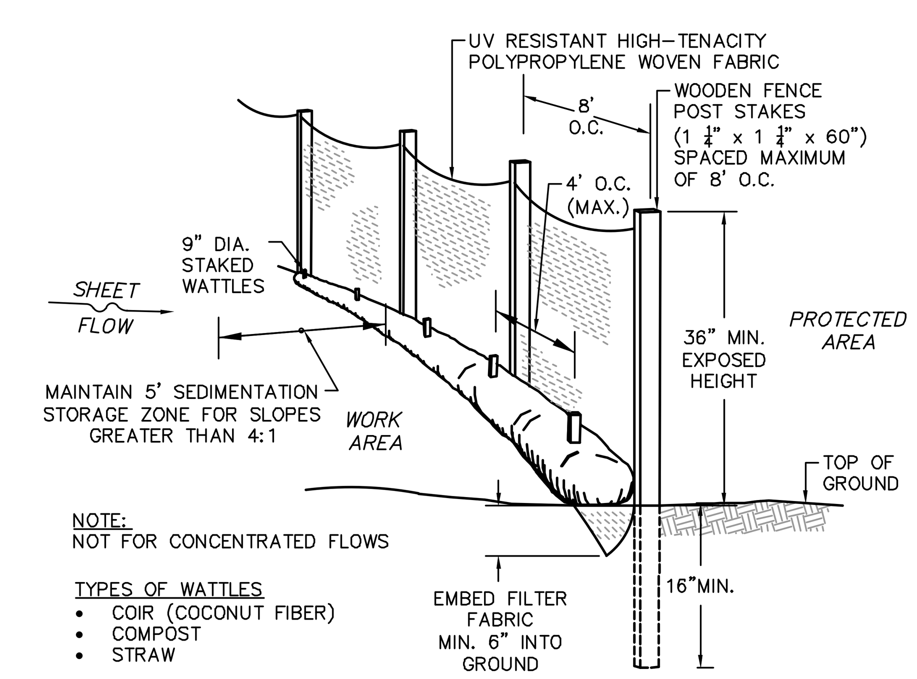

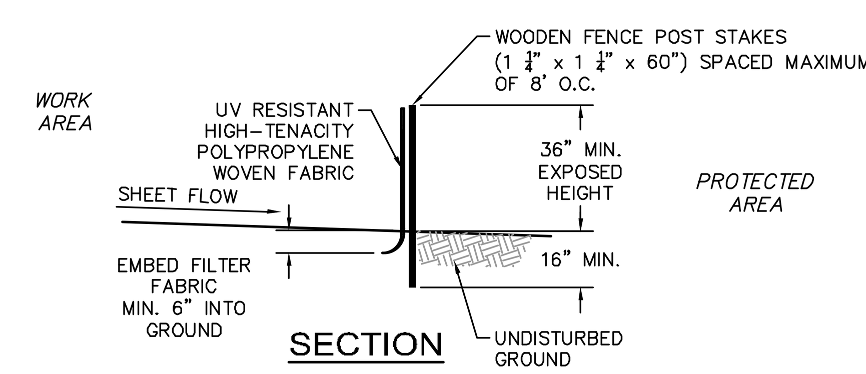

PERIMETER PROTECTION BARRIER

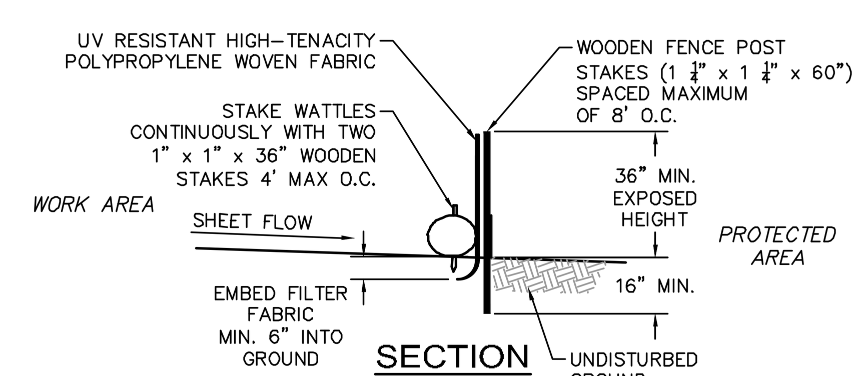

PERIMETER PROTECTION BARRIER
SILT FENCE DETAIL WITH WATTLES

NOT TO SCALE

WARNER LARSON
LANDSCAPE ARCHITECTS
130 WEST BROADWAY, BOSTON MA 02127
617.464.1440 warnerlarson.com

Nitsch Engineering
www.nitscheng.com
2 Center Plaza, Suite 430
Boston, MA 02108
T: (617) 338-0063
F: (617) 338-6472
Civil Engineering · Land Surveying · Transportation Engineering · Structural Engineering · Green Infrastructure · Planning · GIS

BROOKE CHARTER HIGH SCHOOL: MATTAPAN COMMUNITY FIELD

BOSTON, MASSACHUSETTS

COMMONWEALTH OF MASSACHUSETTS
JOHN M. SCHMID
CIVIL
No. 39155
REGISTERED PROFESSIONAL ENGINEER
12/19/2023

REVISIONS

NO.	DATE	DESCRIPTION
	05/24/23	BWSC RESUBMISSION
	10/25/23	DEP APPEAL SUBMISSION

DATE: 07-21-2022
SCALE: AS NOTED
JOB #: BROOKE CHARTER HS
DRAWN BY: AAC

EROSION AND SEDIMENTATION CONTROL DETAILS

C-4

COPYRIGHT WARNER LARSON, INC. 2022

NITSCH #14017

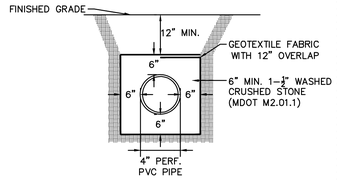

FRENCH DRAIN DETAIL

NOT TO SCALE

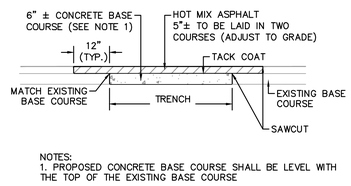

NOTES:
1. PROPOSED CONCRETE BASE COURSE SHALL BE LEVEL WITH THE TOP OF THE EXISTING BASE COURSE

PAVEMENT RESTORATION OVER TRENCH DETAIL

NOT TO SCALE

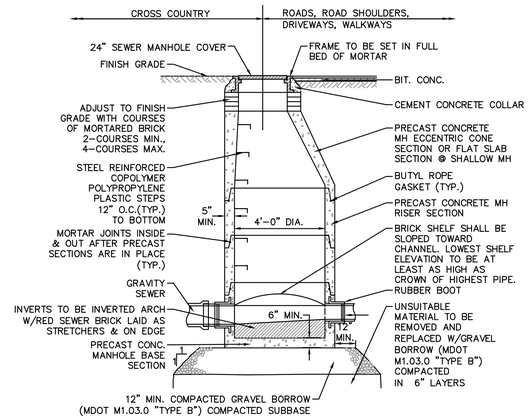

TYPICAL SEWER MANHOLE DETAIL

NOT TO SCALE

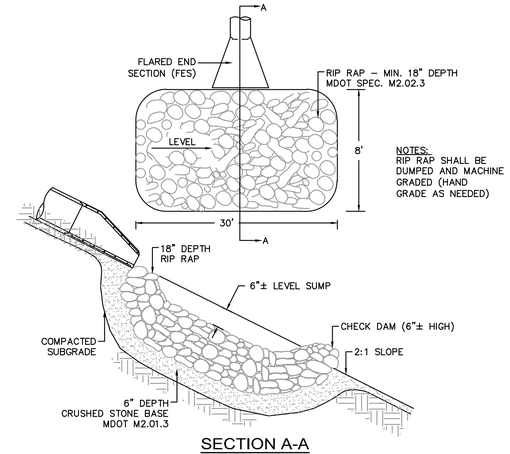

SECTION A-A

LEVEL SPREADER DETAIL

NOT TO SCALE

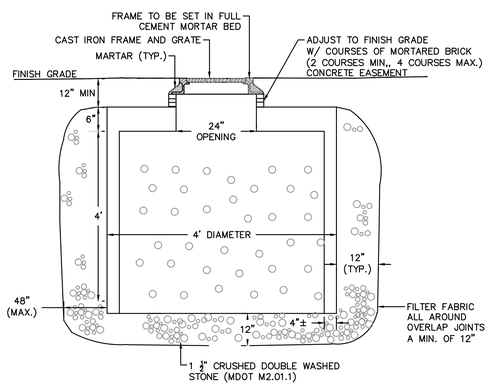

NOTES:
1. NO BOTTOM
2. CONCRETE MINIMUM STRENGTH: 4,000 P.S.I. AFTER 28 DAYS
3. STEEL REINFORCEMENT: ASTM A-615, A-185, OR A-497, 1" MIN. COVER
4. DESIGN LOADING: AASHTO HS20-44

DRY WELL DETAIL

NOT TO SCALE

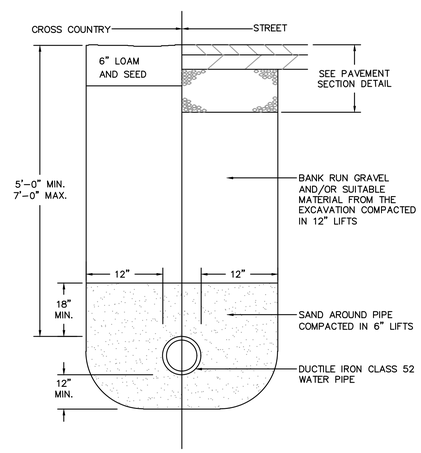

WATER TRENCH DETAIL

NOT TO SCALE

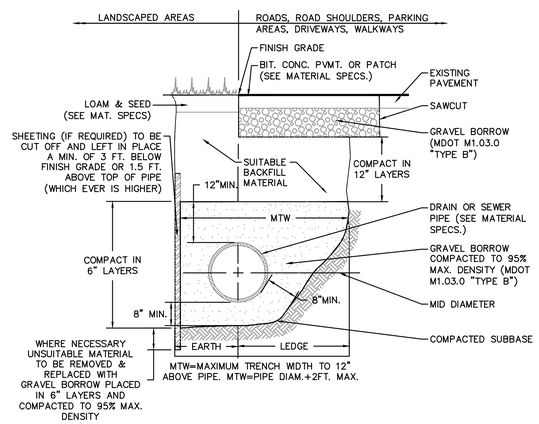

STANDARD TRENCH DETAIL FOR UTILITY PIPE

NOT TO SCALE

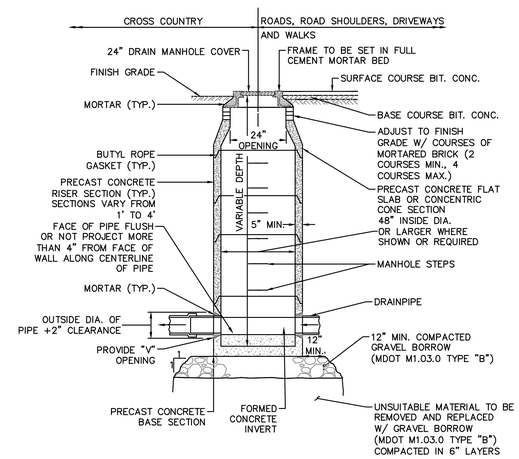

TYPICAL DRAIN MANHOLE DETAIL

NOT TO SCALE

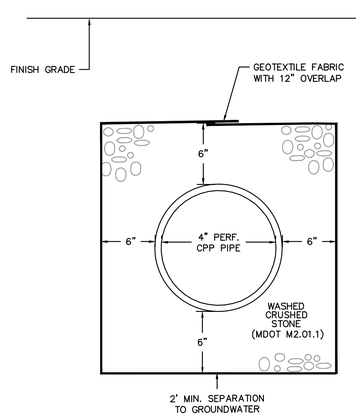

4" INFILTRATION TRENCH DETAIL

NOT TO SCALE

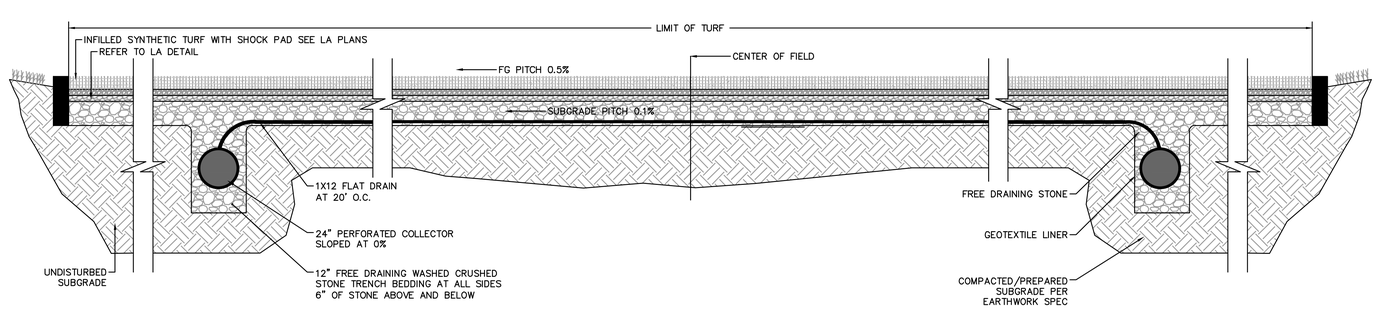

FIELD INFILTRATION SYSTEM DETAIL

NOT TO SCALE

COPYRIGHT WARNER LARSON, INC. 2022

WARNER LARSON
LANDSCAPE ARCHITECTS
130 WEST BROADWAY, BOSTON MA 02127
617.464.1440 warnerlarson.com

Nitsch Engineering
www.nitschengr.com
2 Center Plaza, Suite 430
Boston, MA 02108
T: (617) 338-0063
F: (617) 338-6472
• Civil Engineering
• Land Surveying
• Transportation Engineering
• Water Resources Engineering
• Green Infrastructure
• Planning
• GIS

BROOKE CHARTER HIGH SCHOOL: MATTAPAN COMMUNITY FIELD

BOSTON, MASSACHUSETTS

COMMONWEALTH OF MASSACHUSETTS
JOHN M. SCHMID
CIVIL
No. 39165
REGISTERED PROFESSIONAL ENGINEER
12/19/2023

REVISIONS

NO.	DATE	DESCRIPTION
	05/24/23	BWSC RESUBMISSION
	10/25/23	DEP APPEAL SUBMISSION

DATE: 07-21-2022
SCALE: AS NOTED
JOB #: BROOKE CHARTER HS
DRAWN BY: AAC

CIVIL DETAILS

C-5

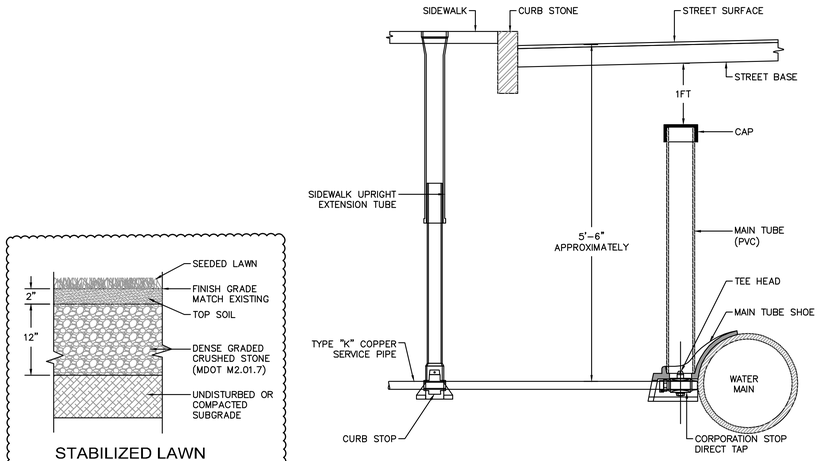

WATER CONNECTION DETAIL FOR ¾" TO 2" SERVICES

NOT TO SCALE

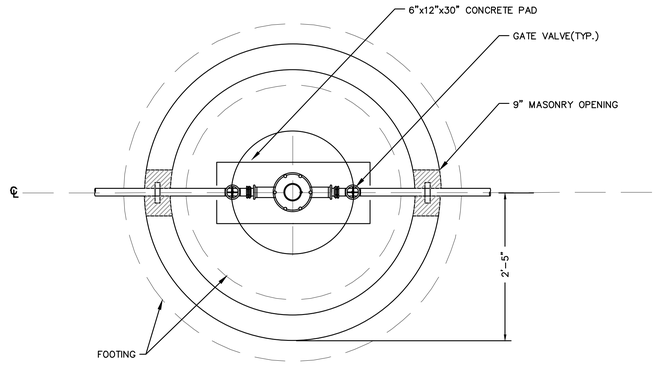

PLAN

STABILIZED LAWN

NOT TO SCALE

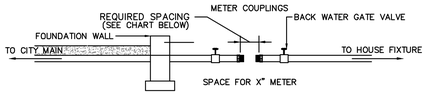

SIZE OF METER (INCHES)	REQUIRED SPACING
2"	1'-11 ¼"
1-½"	1'-1 ¼"
1"	10 ½"
¾"	9"
⅝"	7 ¾"

BWSC METER SPACING DETAIL

NOT TO SCALE

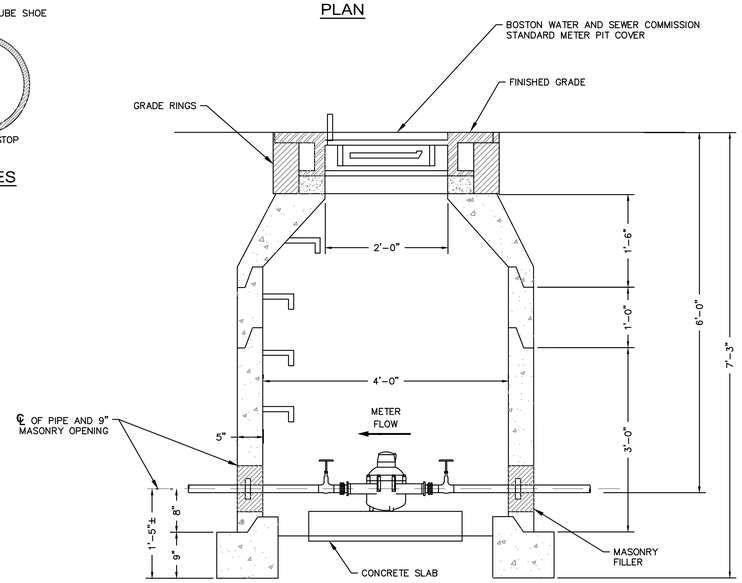

ELEVATION

INSTALLATION OF REMOTE READING DEVICES BY COMMISSION

NOTE:

CONTRACTOR SHALL NOTIFY BWSC METER DEPT. TO DETERMINE IF METER CONDUIT MUST BE INSTALLED. IF REQUIRED THE CONTRACTOR SHALL SUPPLY THE WIRE AND INSTALL AS SPECIFIED.

BWSC WATER METER PIT

NOT TO SCALE

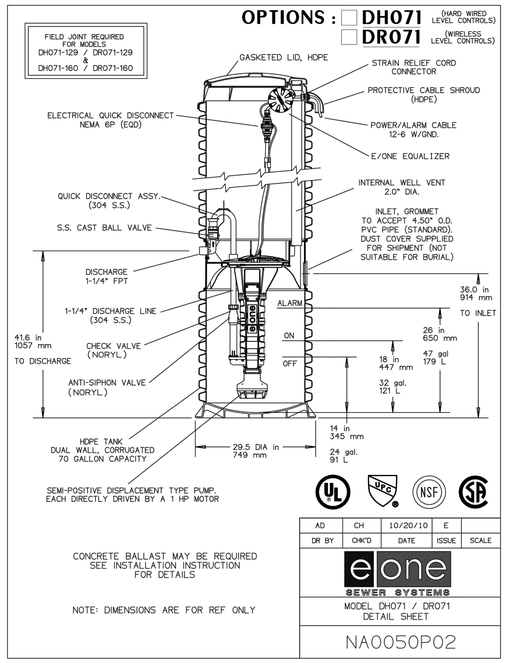

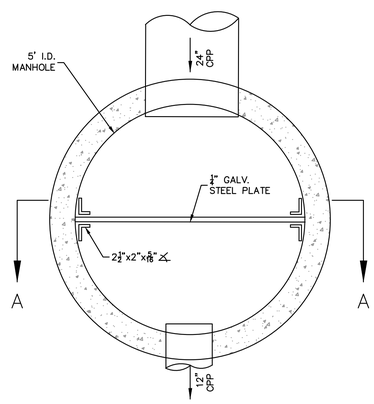

PLAN

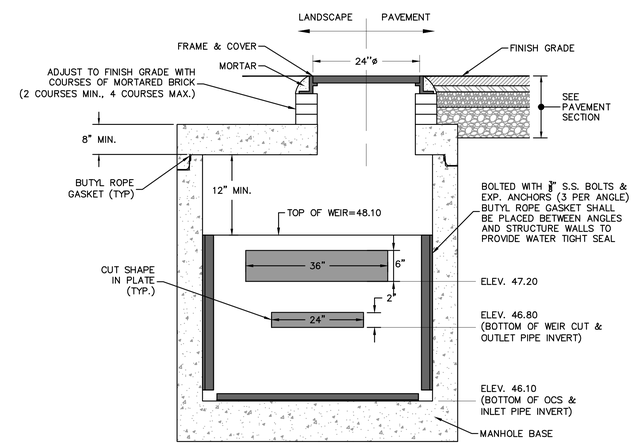

SECTION A-A

OUTLET CONTROL STRUCTURE - 200

NOT TO SCALE

WARNER LARSON
LANDSCAPE ARCHITECTS
130 WEST BROADWAY, BOSTON MA 02127
617.464.1440 warnerlarson.com

Nitsch Engineering
www.nitschengg.com
2 Center Plaza, Suite 430
Boston, MA 02108
T: (617) 338-0063
F: (617) 338-6472
• Civil Engineering
• Land Surveying
• Structural Engineering
• Mechanical Engineering
• Geotechnical
• Electrical
• MEP

BROOKE CHARTER HIGH SCHOOL: MATTAPAN COMMUNITY FIELD

BOSTON, MASSACHUSETTS

COMMONWEALTH OF MASSACHUSETTS
JOHN M. SCHMID
CIVIL
No. 39155
REGISTERED PROFESSIONAL ENGINEER
12/19/2023

REVISIONS

NO.	DATE	DESCRIPTION
	05/24/23	BWSC RESUBMISSION
	10/25/23	DEP APPEAL SUBMISSION

DATE: 07-21-2022

SCALE: AS NOTED

JOB #: BROOKE CHARTER HS

DRAWN BY: AAC

CIVIL DETAILS

C-6

COPYRIGHT WARNER LARSON, INC. 2022