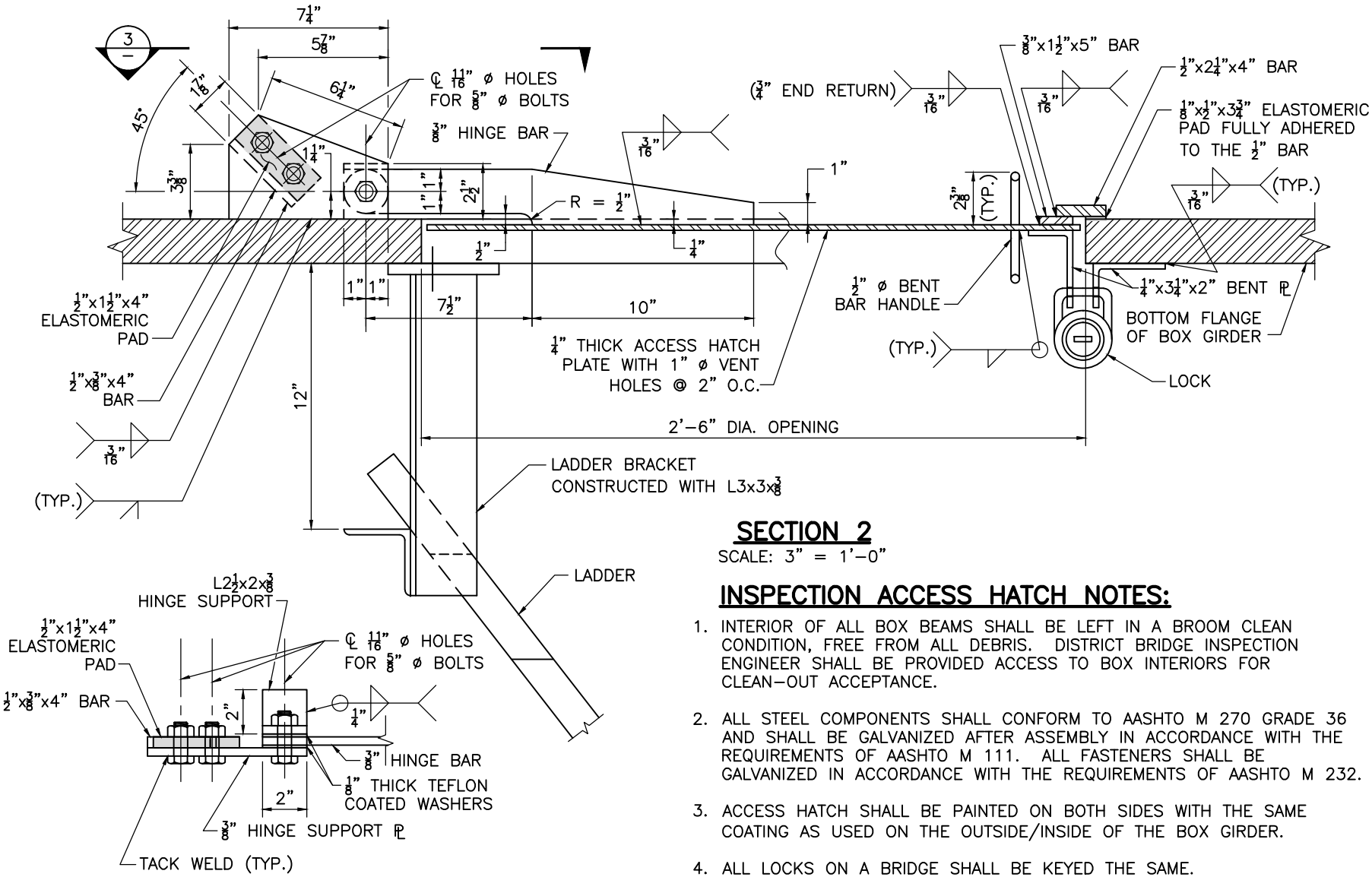

SECTION 2

SCALE: 3" = 1'–0"

SECTION 3

SCALE: 3" = 1'–0"

INSPECTION ACCESS HATCH NOTES:

1. INTERIOR OF ALL BOX BEAMS SHALL BE LEFT IN A BROOM CLEAN CONDITION, FREE FROM ALL DEBRIS. DISTRICT BRIDGE INSPECTION ENGINEER SHALL BE PROVIDED ACCESS TO BOX INTERIORS FOR CLEAN–OUT ACCEPTANCE.
2. ALL STEEL COMPONENTS SHALL CONFORM TO AASHTO M 270 GRADE 36 AND SHALL BE GALVANIZED AFTER ASSEMBLY IN ACCORDANCE WITH THE REQUIREMENTS OF AASHTO M 111. ALL FASTENERS SHALL BE GALVANIZED IN ACCORDANCE WITH THE REQUIREMENTS OF AASHTO M 232.
3. ACCESS HATCH SHALL BE PAINTED ON BOTH SIDES WITH THE SAME COATING AS USED ON THE OUTSIDE/INSIDE OF THE BOX GIRDER.
4. ALL LOCKS ON A BRIDGE SHALL BE KEYED THE SAME.
   (eliminate this note if locks are not needed)

NOTES:

1. *The Designer shall consult the MassDOT Bridge Inspection Engineer for the inspection access hatch location along the bridge span and other relevant information.*
2. *Locks and ¼"x3½"x2" bent plates shall be provided on a bridge only if the inspection access hatch is located less than 10' from the ground.*

massDOT Massachusetts Department of Transportation Highway Division

LRFD BRIDGE MANUAL, PART II

INSPECTION ACCESS HATCH DETAILS AND NOTES

STEEL BOX GIRDERS

DATE OF ISSUE
JUNE 2013

DRAWING NUMBER
5.3.14