CITY/TOWN
STREET/ROUTE # OR NAME

| STATE | FED. AID PROJ. NO. | SHEET NO. | TOTAL SHEETS |
|---|---|---|---|
| MA | – | 6 | X |
| PROJECT FILE NO. XXXXXX | | | |

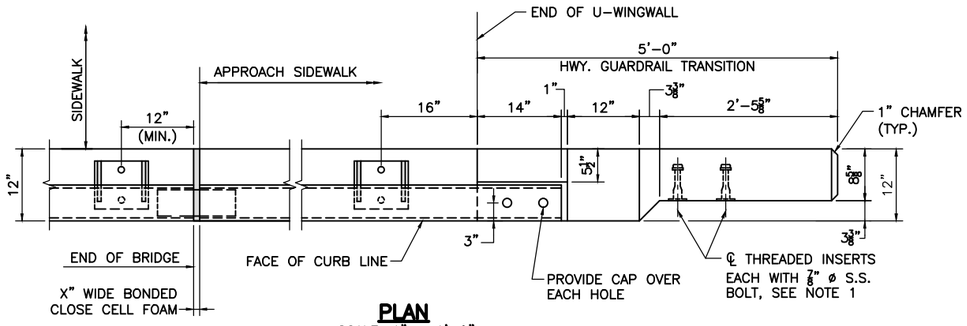


**PLAN**
SCALE: 1" = 1'-0"

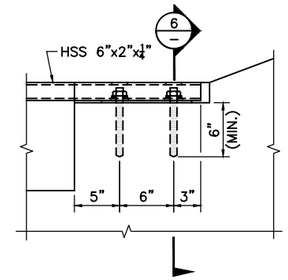


**ELEVATION**

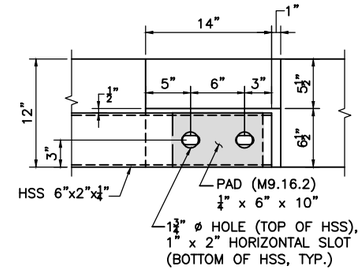


**PLAN**

**RAIL ATTACHMENT**
SCALE: 1½" = 1'-0"

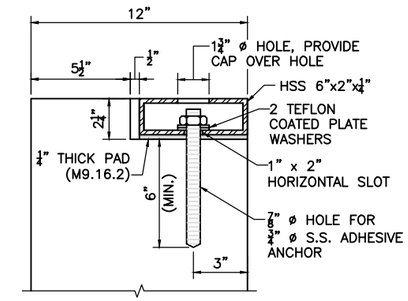


**SECTION 6**
SCALE: 3" = 1'-0"

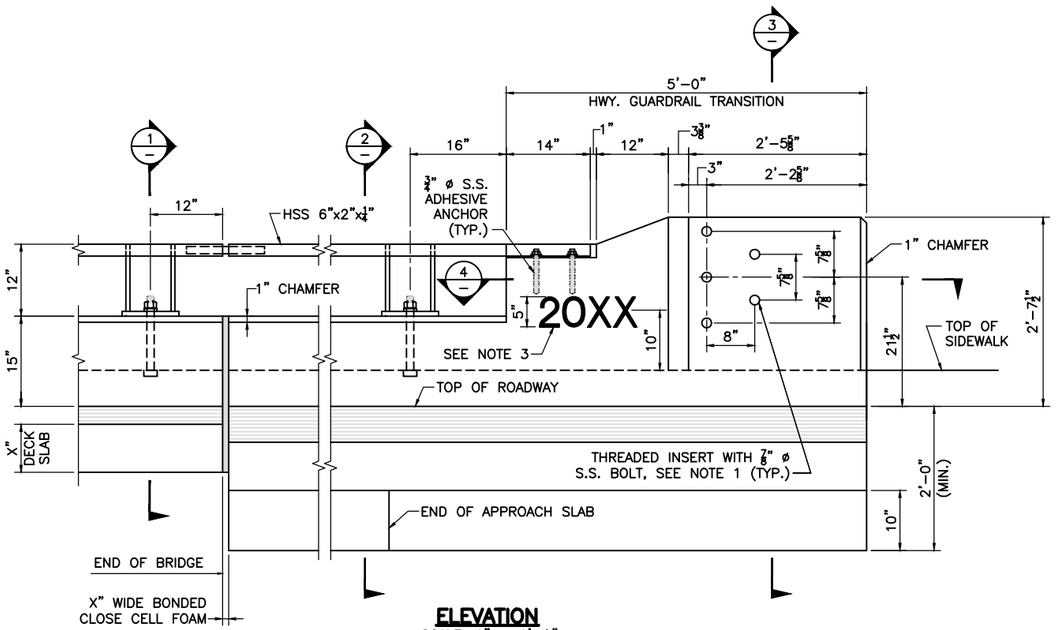


**ELEVATION**
SCALE: 1" = 1'-0"

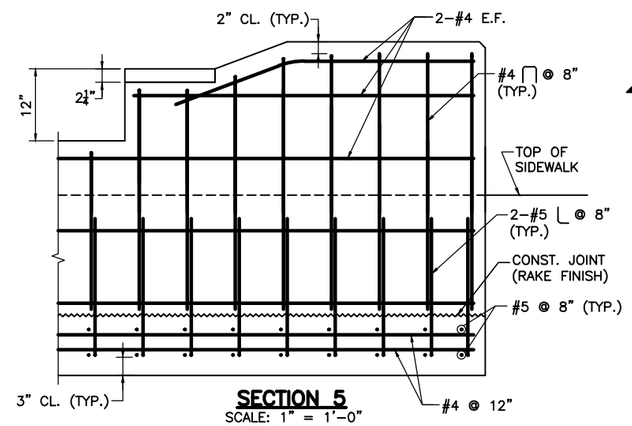


**SECTION 5**
SCALE: 1" = 1'-0"

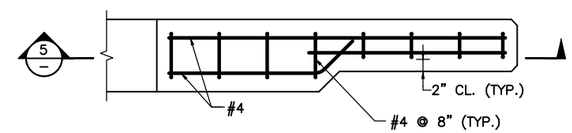


**SECTION 4**
SCALE: 1" = 1'-0"

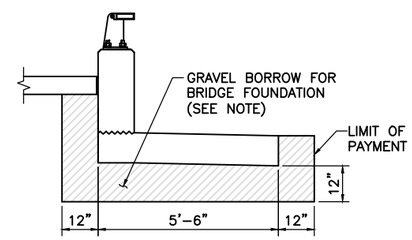


**NOTE:**
GRAVEL BORROW SHALL BE PLACED AND THOROUGHLY COMPACTED TO THE GRADE OF THE BOTTOM OF THE SLAB.

**BR-2 RAILING BACKFILL**
SCALE: ½" = 1'-0"

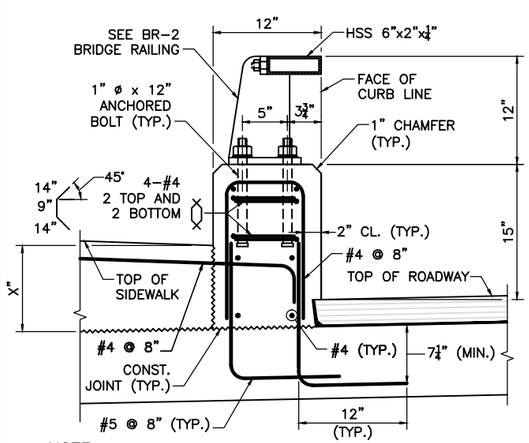


**NOTE:**
SIDEWALK AND DECK SLAB REINFORCEMENT NOT SHOWN FOR CLARITY.

**SECTION 1**
SCALE: 1½" = 1'-0"

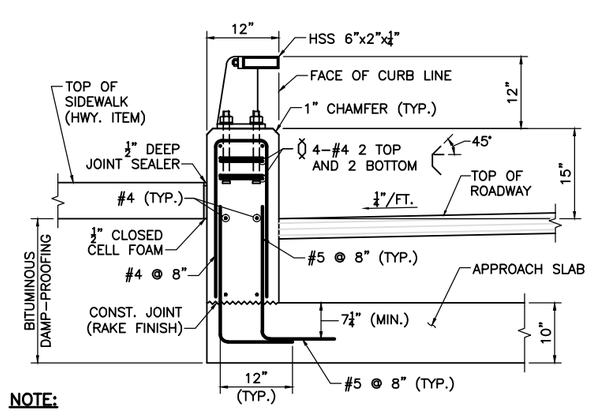


**NOTE:**
APPROACH SLAB REINFORCEMENT NOT SHOWN FOR CLARITY.

**SECTION 2**
SCALE: 1" = 1'-0"

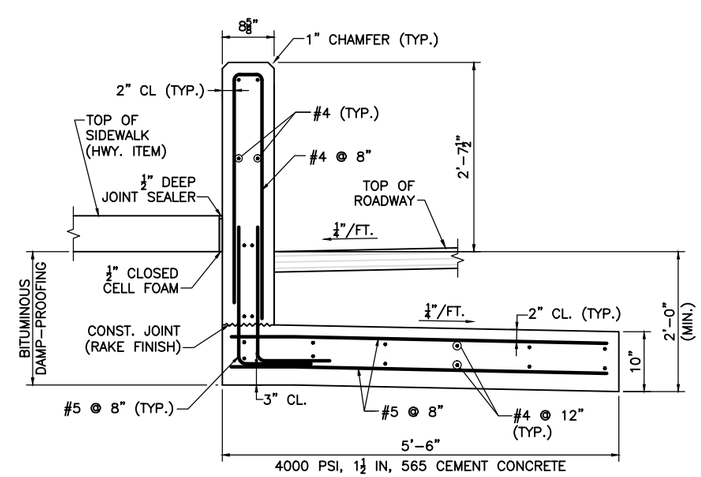


**SECTION 3**
SCALE: 1" = 1'-0"

**NOTES:**

1. THREADED INSERTS SHALL BE PREQUALIFIED BY THE MANUFACTURER AS BEING CAPABLE OF DEVELOPING A NOMINAL SHEAR RESISTANCE OF 20 KIPS PER ⅞" ø S.S. BOLT. S.S. BOLTS SHALL BE ⅞" ø x 1½" LONG FULLY THREADED AISI TYPE 304N STAINLESS STEEL. INSERTS FOR ⅞" S.S. BOLTS SHALL BE CAST-IN-PLACE AND GALVANIZED.
2. ALL CONCRETE FOR THE BR-2 RAILING AND HIGHWAY GUARDRAIL TRANSITION SHALL BE 5000 PSI, ¾ IN, 685 HP CEMENT CONCRETE.
3. USE LATEST CONTRACT COMPLETION YEAR IN EFFECT WHEN THE FIRST HIGHWAY GUARDRAIL TRANSITION IS CAST.

| | |
|---|---|
| MONTH DD, YYYY | ISSUED FOR CONSTRUCTION |
| DATE | DESCRIPTION |
| USE ONLY PRINTS OF LATEST DATE | |

# HIGHWAY GUARDRAIL TRANSITION FOR BR-2 RAILING

SHEET XX OF XX SHEETS BRIDGE NO. X-XX-XXX (XXX)

Date: June 2013

HIGHWAY GUARDRAIL TRANSITION - BR-2 RAILING.DWG 8-Jan-2014

Xxxxxx Structural Submittal (SII) DD-Month-YYYY