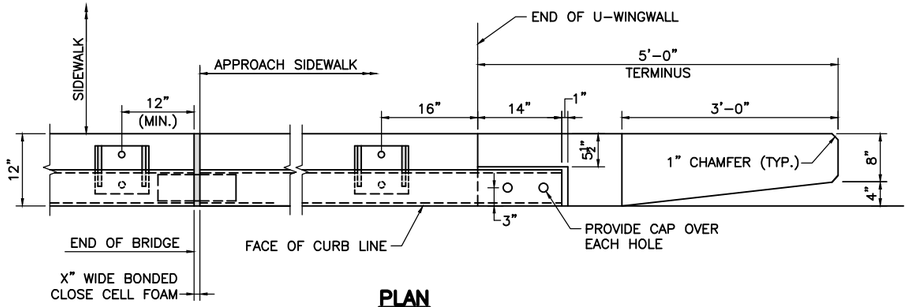


**PLAN**
SCALE: 1" = 1'-0"

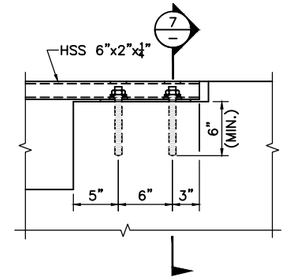


**ELEVATION**

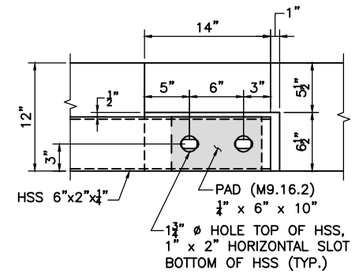


**PLAN**

**RAIL ATTACHMENT**
SCALE: 1½" = 1'-0"

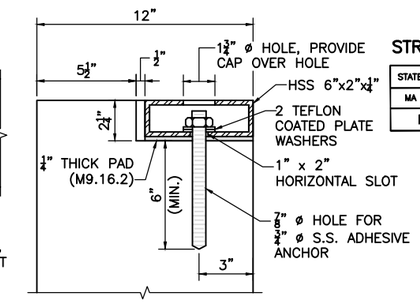


**SECTION 7**
SCALE: 3" = 1'-0"

CITY/TOWN
STREET/ROUTE # OR NAME

| STATE | FED. AID PROJ. NO. | SHEET NO. | TOTAL SHEETS |
|---|---|---|---|
| MA | – | 6 | X |
| PROJECT FILE NO. XXXXXX | | | |

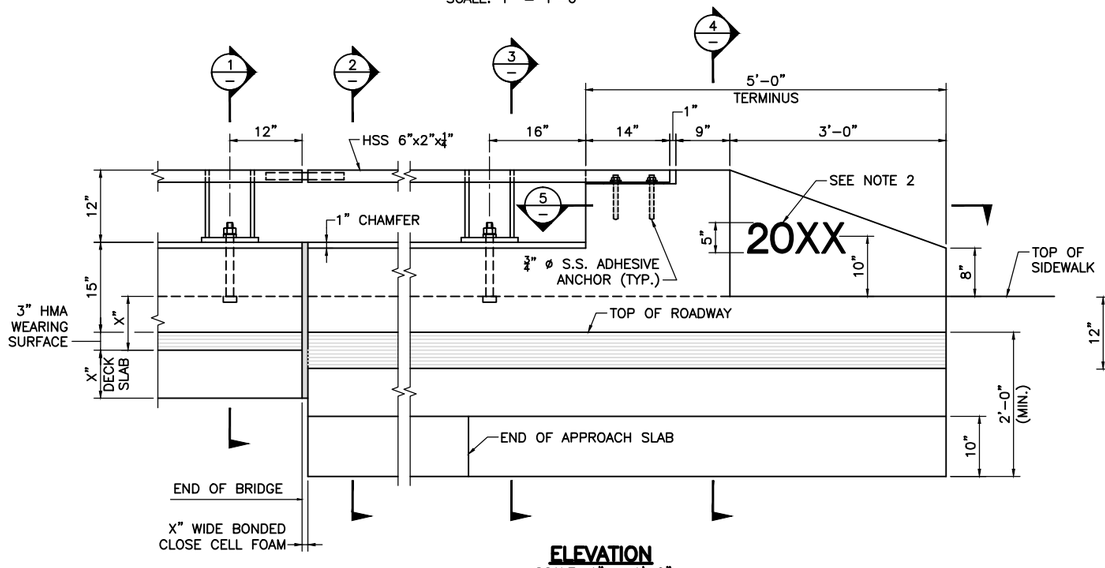


**ELEVATION**
SCALE: 1" = 1'-0"

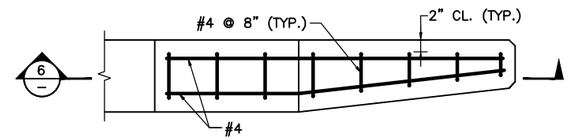


**SECTION 5**
SCALE: 1" = 1'-0"

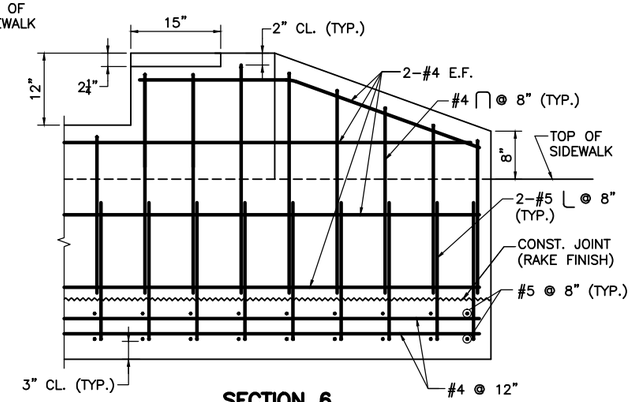


**SECTION 6**
SCALE: 1" = 1'-0"

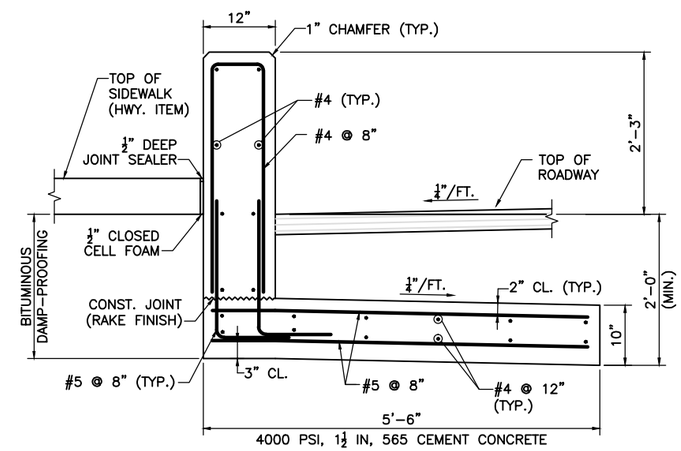


**SECTION 4**
SCALE: 1" = 1'-0"

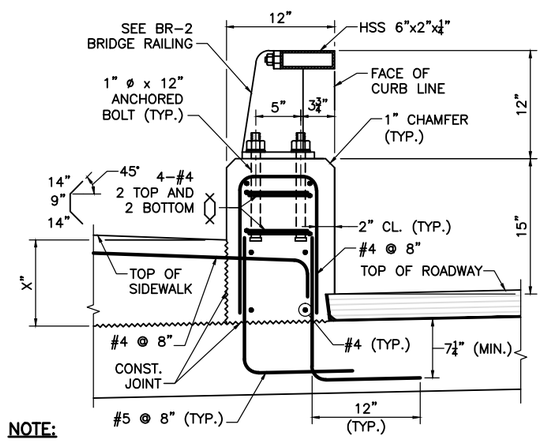


**NOTE:**
SIDEWALK AND DECK SLAB REINFORCEMENT NOT SHOWN FOR CLARITY.

**SECTION 1**
SCALE: 1½" = 1'-0"

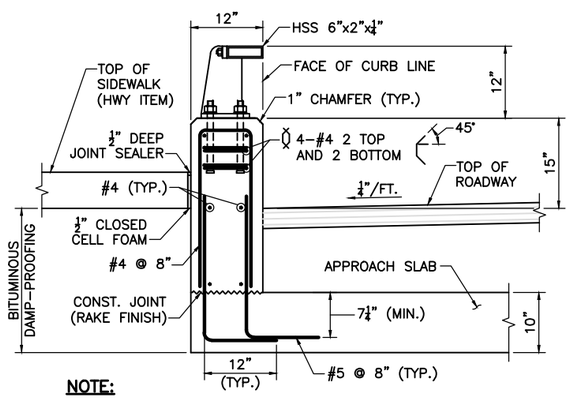


**NOTE:**
APPROACH SLAB REINFORCEMENT NOT SHOWN FOR CLARITY.

**SECTION 2**
SCALE: 1" = 1'-0"

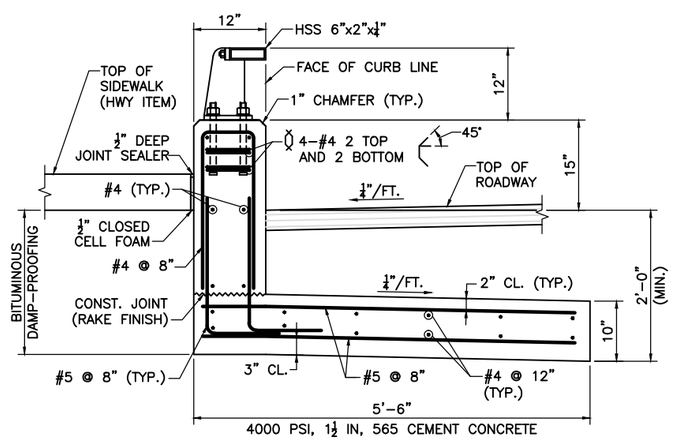


**SECTION 3**
SCALE: 1" = 1'-0"

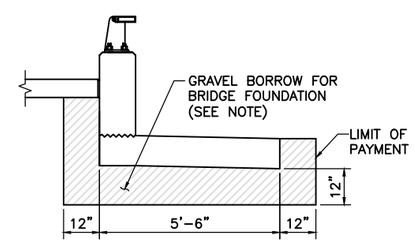


**NOTE:**
GRAVEL BORROW SHALL BE PLACED AND THOROUGHLY COMPACTED TO THE GRADE OF THE BOTTOM OF THE SLAB.

**BR-2 RAILING BACKFILL**
SCALE: ½" = 1'-0"

**NOTES:**

1. ALL CONCRETE FOR THE BR-2 RAIL AND TERMINUS SHALL BE 5000 PSI, ¾ IN, 685 HP CEMENT CONCRETE.
2. USE LATEST CONTRACT COMPLETION YEAR IN EFFECT WHEN THE FIRST TERMINUS IS CAST.

| | |
|---|---|
| MONTH DD, YYYY | ISSUED FOR CONSTRUCTION |
| DATE | DESCRIPTION |
| USE ONLY PRINTS OF LATEST DATE | |

# TERMINUS FOR BR-2 BRIDGE RAILING

SHEET XX OF XX SHEETS BRIDGE NO. X-XX-XXX (XXX)

Date: June 2013

TERMINUS - BR-2 RAILING.DWG 8-Jan-2014

Xxxxxx Structural Submittal (S#) DD-Month-YYYY